COMMONWEALTH OF PENNSYLVANIA
PENNSYLVANIA PUBLIC UTILITY COMMISSION
P.O. BOX 3265, HARRISBURG, PA 17105-3265

IN REPLY PLEASE
REFER TO OUR FILE

October 4, 2007

A-00122496

TO ALL PARTIES

Application of the Department of Transportation of the Commonwealth of Pennsylvania for the approval to replace the existing overhead bridge where S. R. 1038 and S. R. 4025 cross over a single track of the Buffalo & Pittsburgh Railroad, Inc. (DOT # 869 352 J) in West Kittanning Borough, Applewood Borough and East Franklin Township, Armstrong County; and the allocation of costs incident thereto.

DOCUMENT
FOLDER

To Whom It May Concern:

At a location in West Kittanning Borough, Applewood Borough and East Franklin Township, Armstrong County, State Route 1038 and State Route 4025 cross, above grade, a single track of Buffalo & Pittsburgh Railroad Inc. (BPRR).

By application filed March 9, 2006, Pennsylvania Department of Transportation (Department) seeks Commission approval to replace the existing bridge structure carrying S. R. 1038 and S. R. 4025 above the railroad track.

The existing structure is an eight-span, multi-steel girder bridge supported by concrete abutments and piers. The length of the existing bridge is approximately 460 feet. The bridge carries two traffic lanes, each 12-foot wide with four-foot wide shoulders, along both sides, and a four-foot wide sidewalk on the east side.

The Department proposes to replace the existing bridge with a four-span, steel multi-girder bridge and single span rolled beam T-span. The new bridge will carry a nine-inch reinforced concrete deck and will provide three, 12-foot wide traffic lanes with 2.67-foot wide shoulders on both sides. A new, five-foot wide sidewalk will be constructed on the east side of the new bridge. The single-span rolled beam T-span will be attached to the northern most span of the main bridge to allow the intersection of the two state highways (S. R. 1038 and 4025). New concrete abutments and piers will be constructed to support the superstructure. The overall width of the bridge will be 50.8 feet. The length of the new bridge will be 521.0 feet between centerline of bearings. A minimum vertical clearance of 22.04 will be provided above the railroad track. The approach to the new bridge carrying State Route 1038 will be a tangent with a grade of 8.09% descending to the structure, a vertical curve over the structure, and a grade of 7.60% descending beyond the structure, south to north. The single span portion of the bridge carrying State Route 4025 from its intersection with State Route 1038 in span 4 will be a descending grade transitioning from 2.33% to 1.46%, south to north.

DOCKETED
NOV 07 2007

A field investigation and conference was arranged by a Commission staff engineer and held at the site of the crossing on April 28, 2006. All parties of the record were notified of the conference and representatives of the following entities were in attendance:

Pennsylvania Department of Transportation (applicant)
Buffalo & Pittsburgh Railroad, Inc
East Franklin Township
Armstrong County
Applewood Borough
Alltell Pennsylvania, Inc.
West Hills Area Water

Although notified by letter dated March 21, 2006, there were no represtatives of West Kittanning Borough, Allegheny Power System, Dominion Peoples or Adelphia Cable in attendance.

At the field conference, the Department described the proposed project. The Department agreed to perform the work including providing traffic controls or detours, at its sole cost and expense. The railroad facilities beneath the bridge should not be affected by the proposed work. The Department agreed to maintain the new bridge upon completion, exclusive of the street lighting which Armstrong County agreed to maintain. The non-carrier utilities that were present at the field conference stated their facilities should not be affected by the proposed work, but agreed to provide any alterations, if necessary, at their initial cost and expense.

The Department submitted final construction plans, consisting of two hundred and fifty-eight (258) sheets to the parties of record and the Commission on July17, 2007, received July 18, 2007.

By letter received August 16, 2007, the Department notified the Commission that it has amicably settled any right-of-way claims with the Buffalo & Pittsburgh Railroad, Inc. and that the Commission does not need to appropriate any railroad right-of-way.

By letter received August 27, 2007, the Department notified the Commission that it and BPRR have mutually agreed to terms concerning railroad flagmen/inspectors for the project. BPRR agreed to provide up to 1,500 straight hours of railroad flagmen/inspectors at their sole cost and expense. Any railroad flagmen/inspectors labor hours in excess of the aforesaid mentioned 1,500 straight hours will be at the Department's sole cost and expense.

The Commission will assume jurisdiction along the centerline of State Route 1038 between Engineering Stations 1943 + 75.00 and 1964+00.00 and also along the centerline of State Route 4025 between Engineering Stations 10+00.00 and 12+00.00.

The proposed project is estimated to cost $9,300,000 utilizing both Federal and State funds.

Upon full consideration of the matters involved and inasmuch as none of the parties offered any objection to the Department's proposed project, we find that a Secretarial letter can be issued approving the application without a formal hearing. Upon completion of the project and if requested by any party of record, a hearing be held to allocate any costs incurred by the non-carrier utilities.

The Commission issues this Secretarial letter in accordance with Section 2702 of the Public Utility Code and finds that the alteration of the crossing is necessary for the service, accommodation, convenience or safety of the public.

The application is approved as herein directed:

1. The crossing where State Route 1038 and State Route 4025 cross, above grade, the track of Buffalo & Pittsburgh Railroad, Inc., be altered by replacement of the existing bridge, in West Kittanning Borough, Applewood Borough and East Franklin Township, Armstrong County, generally in accordance with Pennsylvania Department of Transportation's application filed March 9, 2006, and detailed construction plan, consisting of two hundred and fifty-eight (258) sheets, and received by the Commission on July 18, 2007, which plan is made part hereof and is hereby approved.

2. Pennsylvania Department of Transportation, at its sole cost and expense, furnish all material and do all work necessary to construct the new bridge carrying the State Routes above the grade of the track of Buffalo & Pittsburgh Railroad, Inc. and highway approaches thereto, and to remove the existing bridge structure, all in accordance with the approved plans.

3. Buffalo & Pittsburgh Railroad, Inc., at the sole cost and expense of Pennsylvania Department of Transportation, furnish all material and do all work necessary to alter or relocate its track, signals, pole line facilities and any other facilities which may be required for the construction of the crossing project.

4. Buffalo & Pittsburgh Railroad, Inc., its sole cost and expense, furnish and maintain any flagmen, watchmen and/or construction inspectors necessary to protect and safeguard its railroad operations during the time the crossing project is being constructed along, above or adjacent to its track up to 1,500 straight hours.

5. Buffalo & Pittsburgh Railroad, Inc., at the sole cost and expense of Pennsylvania Department of Transportation, furnish and maintain any flagmen, watchmen and/or construction inspectors necessary to protect and safeguard its railroad operations during the time the crossing project is being constructed along, above or adjacent to its track in excess of 1,500 straight hours.

6. Pennsylvania Department of Transportation, at its sole cost and expense, furnish all material and do all work necessary to establish and maintain any detour or traffic controls, that may be required, to properly accommodate vehicular and pedestrian traffic during the time the project is being constructed.

7. Any relocation of, changes in and/or removal of any adjacent structures, equipment or other facilities of any public utility, other than Buffalo & Pittsburgh Railroad, Inc., within the limits of highway, within the Commission's jurisdiction, be made by said public utility at its initial cost and expense, and in such a manner as will not interfere with the construction of the improvement; and such relocated or altered facilities thereafter be maintained by said public utility, at its sole cost and expense.

8. Any relocation of, changes in and/or removal of any adjacent structures, equipment or other facilities of any public utility, other than Buffalo & Pittsburgh Railroad, Inc., located beyond the limits of this Commission's jurisdiction, be made by said public utility in such a manner as will not interfere with the construction of the improvement; and such relocated or altered facilities thereafter be maintained by said public utility, at its sole cost and expense.

9. Pennsylvania Department of Transportation, at its sole cost and expense, furnish all material and do all work necessary to complete the remainder of the project, including any attendant storm drainage facilities or any other facilities installed or altered in conjunction with this project, constructed in accordance with the approved plans.

10. Pennsylvania Department of Transportation cooperate with Buffalo & Pittsburgh Railroad, Inc. so that during construction of the improvement, the movement of railroad traffic will not be endangered or unnecessarily inconvenienced.

11. Buffalo & Pittsburgh Railroad, Inc. cooperate with Pennsylvania Department of Transportation during construction provide for all train movements to be in a safe manner and under control.

12. That non-carrier public utility companies cooperate with Pennsylvania Department of Transportation so that the alteration and/or relocation of their facilities will not interfere with the project.

13. Pennsylvania Department of Transportation, at least fourteen (14) days prior to the start of work, notify all parties in interest of the actual date on which work will begin.

14. All work necessary to complete the construction of the project be done in a manner satisfactory to this Commission on or before December 31, 2010, and

that on or before said date, Pennsylvania Department of Transportation report to this Commission the date of actual completion of the work; and Pennsylvania Department of Transportation certify to this Commission that the work has been satisfactorily completed in accordance with the approved plans and this letter.

15. Pennsylvania Department of Transportation pay all compensation for damages, if any, due to owners of property taken, injured or destroyed by reason of the construction of the improvement in accordance with this letter.

16. Upon completion of the reconstruction of the bridge of State Route 1038 and State Route 4025 and its opening to public use, Armstrong County, at its sole cost and expense, furnish all material and do all work necessary to maintain the street lighting on the new bridge.

17. Upon completion of the reconstruction of the bridge of State Route 1038 and State Route 4025 and its opening to public use, Pennsylvania Department of Transportation, at its sole cost and expense, furnish all material and do all work necessary to maintain the entire structure, exclusive of the street lighting, including the highway approaches, the substructure, superstructure, roadway pavement sidewalk and concrete parapets constructed herein; and any highway drainage facilities installed or altered in accordance with this Secretarial letter.

18. Upon completion of the work herein directed, and if requested by any party of record, a hearing be scheduled at a time and place designated by the Commission, for the purpose of taking testimony upon the final allocation of costs and expenses incurred by any party of record; and any other matters relevant to this proceeding.

19. All cost which are to be reimbursed by the Pennsylvania Department of Transportation consistent with this letter, shall be reimbursed pursuant to the provisions of 23 C. F. R. §§140, 646. The aforesaid Federal reimbursement shall not supersede, delay or, in any manner, postpone the effect of any paragraph contained in this or any related Secretarial Letter or Order.

20. If you are dissatisfied with the resolution of this matter, you may, as set forth in 52 Pa. Code §5.44, file a petition with the Commission within twenty (20) days of the date of this letter.

Very truly yours,

James J. McNulty
Secretary

FEDERAL PROJECT NO. _____

	DISTRICT	COUNTY	TOWNSHIP	BOROUGH	ROUTE	SECTION	TOTAL SHEETS
FCB	10-0	ARMSTRONG	EAST FRANKLIN	APPLEWOLD WEST KITTANNING	1038	150	45

SYS	S.R. or W.O.	SPUR	PHA	SECTION	DIST.	CO.
5	0 1 1 0 3 8	0	7	1 ; 5 ; 0	10	1

ECMS NO. 57406
MPMS NO. 23900

S.R. 01038 FORMERLY KNOWN AS L.R. 69 & 251

COMMONWEALTH OF PENNSYLVANIA

DEPARTMENT OF TRANSPORTATION

DRAWINGS
FOR
CONSTRUCTION
OF
WEST KITTANNING BRIDGE

STATE ROUTE 1038 SECTION 150

IN ARMSTRONG COUNTY

FROM STA. 1943+75.00 TO STA. 1964+00.00 LENGTH 1877.29 FT. 0.356 MI.
FROM SEG. 0040 OFFSET 0112 TO SEG. 0060 OFFSET 0159

PUC APPLICATION DOCKET NUMBER A-00122496

ALSO INCLUDED:

TRAFFIC CONTROL PLAN	14 SHEETS
SIGNING AND PAVEMENT MARKING PLAN	8 SHEETS
EROSION & SEDIMENT POLLUTION CONTROL PLAN	9 SHEETS
HIGHWAY LIGHTING PLAN	7 SHEETS
STRUCTURE PLAN S-27038	97 SHEETS
STRUCTURE PLAN S-27374 (WALL G)	11 SHEETS
STRUCTURE PLAN S-27372 (WALL C)	9 SHEETS
STRUCTURE PLAN S-27373 (WALL E)	6 SHEETS
CROSS SECTIONS	52 SHEETS
EXISTING STRUCTURE PLAN S-720	19 SHEETS

CERTIFIED CORRECT PLANS
Engineer
Approved by Bureau of Transportation & Safety
PENNA. PUBLIC UTILITY COMMISSION
ATTEST
Secretary

SCALE
HORIZONTAL 25 FEET 0 25 FEET

SCALE
VERTICAL 5 FEET 0 5 FEET

DOCUMENT FOLDER

DOCKETED
NOV 07 2007

A-00122496

DESIGN DESIGNATION

		TRAFFIC DATA	
HIGHWAY CLASSIFICATION	- URBAN PRINCIPAL ARTERIAL	CURRENT A.D.T.	- 16,582 (2007)
DESIGN SPEED	- 40 MPH	DESIGN YEAR A.D.T.	- 24,640 (2027)
PAVEMENT WIDTH	- VARIES 36'-0" TO 48'-0"	D.H.V. - 2605	
SHOULDER WIDTH	- 2'-8" CURBED	D - 55	
MEDIAN WIDTH	- NONE	T - 3%	

DRAWN BY	MJM
CHECKED BY	CJC

PREPARED BY:
SAI Consulting Engineers
JOHN STEVEN WEHRS ENGINEER 34406-E
John Steven Wehrs
REG. PROF. ENGINEER PENNA. NO. PE-034406-E
DATE: 7/12/07

RECOMMENDED DATE: 7-12-07
DISTRICT EXECUTIVE

RECOMMENDED DATE: _____
DEPUTY SECRETARY

APPROVED DATE: _____
SECRETARY OF TRANSPORTATION
(ON BEHALF OF THE GOVERNOR AS WELL AS HIMSELF)

h:\projects\0432\Roadway\Plan\Cert11.dgn 7/10/2007

SHEET INDEX BLOCK	
DESCRIPTION	SHEET
TITLE SHEET	1
INDEX MAP	2
LOCATION MAP, GENERAL NOTES & PROJECT COORDINATES	3
TYPICAL SECTIONS	4 TO 7
SPECIAL DETAILS	8 TO 20
SUMMARY SHEETS	21 TO 23
TABULATION SHEETS	24 TO 35
DETAIL PLAN SHEETS	36 TO 38
SURVEY REFERENCES	39
DRAINAGE DATA	40
PROFILE SHEETS	41 TO 45
SUPPLEMENTAL DRAWINGS	
TRAFFIC CONTROL PLAN	1 TO 14
SIGNING AND PAVEMENT MARKING PLAN	1 TO 8
EROSION & SEDIMENT POLLUTION CONTROL PLAN	1 TO 9
HIGHWAY LIGHTING PLAN	1 TO 7
STRUCTURE PLAN S-27038	1 TO 97
STRUCTURE PLAN S-27374 (WALL G)	1 TO 11
STRUCTURE PLAN S-27372 (WALL C)	1 TO 9
STRUCTURE PLAN S-27373 (WALL E)	1 TO 6
CROSS SECTIONS	1 TO 52
EXISTING STRUCTURE PLAN S-720	1 TO 19

LIST OF PROPERTY OWNERS

1. RICHARD L. CRATTY II AND ELOISA CRATTY, HIS WIFE
2. JAMES W. TERNENT, JR. AND ALICE H. TERNENT, HIS WIFE
3. BARBARA N. PRYDE
4. PATRICK HUTCHISON
5. BUFFALO & PITTSBURGH RAILROAD, INC. BY MERGER WITH PITTSBURG & SHAWMUT RAILROAD, INC.
6. THE BOROUGH OF WEST KITTANNING
7. TIMOTHY WALKOWIAK
8. JAMES E. EDWARDS AND DORIS J. EDWARDS
9. RIVERCLIFF TERRACE, INC. A PENNSYLVANIA CORPORATION
10. RICHARD F. FINK AND MARY ELLEN FINK, HIS WIFE
11. BETSY L. ALEXANDER
12. SHELBY S. WILSON AND ERIN L. WILSON, HUSBAND AND WIFE
13. LLOYD E. ALEXANDER AND NANCY J. ALEXANDER, HUSBAND AND WIFE
14. EDWIN C. BOWER AND SUSAN K. BOWER, HIS WIFE

CERTIFIED CORRECT PLANS
Engineer
Approved by Bureau of Transportation & Safety
PENNA. PUBLIC UTILITY COMMISSION
ATTEST
Secretary

DISTRICT	COUNTY	ROUTE	SECTION	SHEET
10-0	ARMSTRONG	1038	150	2 OF 45
EAST FRANKLIN TWP., WEST KITTANNING & APPLEWOLD BORO.'S				

REVISION NUMBER	REVISIONS	DATE	BY

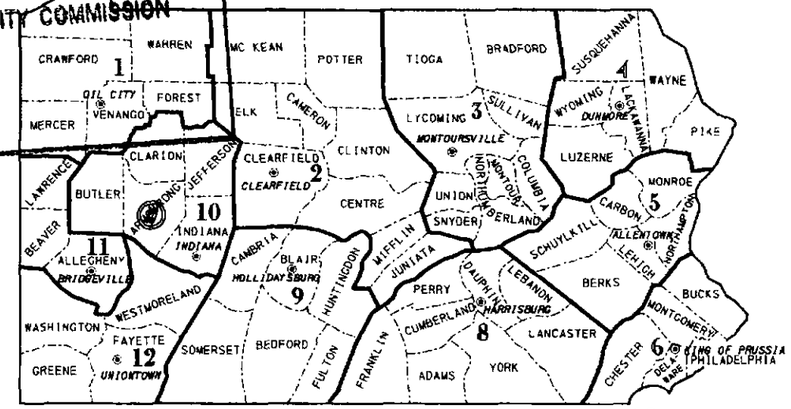

10 DISTRICT
DISTRICT OFFICE
PROJECT LOCATION

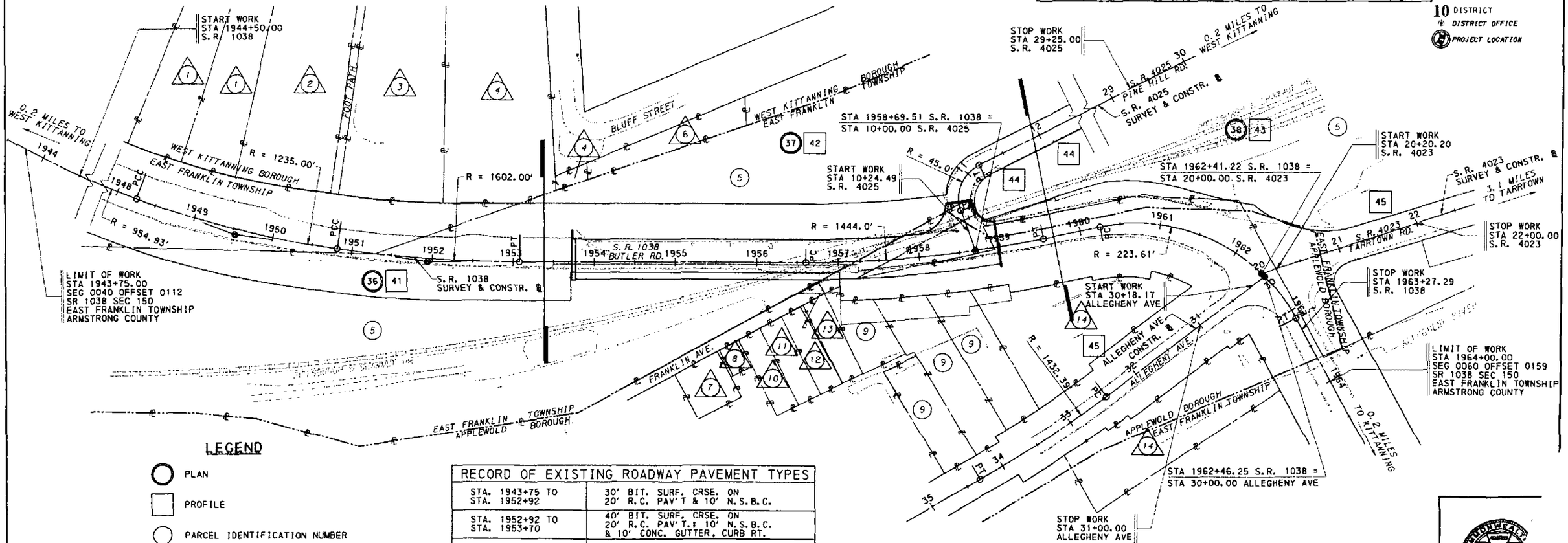

LEGEND

- PLAN
- PROFILE
- PARCEL IDENTIFICATION NUMBER
- PARCEL IDENTIFICATION NUMBER-NO TAKE
- SHEET LIMITS

RECORD OF EXISTING ROADWAY PAVEMENT TYPES	
STA. 1943+75 TO STA. 1952+92	30' BIT. SURF. CRSE. ON 20' R.C. PAV'T & 10' N.S.B.C.
STA. 1952+92 TO STA. 1953+70	40' BIT. SURF. CRSE. ON 20' R.C. PAV'T.& 10' N.S.B.C. & 10' CONC. GUTTER, CURB RT.
STA. 1953+70 TO STA. 1964+00	30' BIT. SURF. CRSE. ON R.C. PAV'T

NOTE: THE DEPTHS OF MATERIAL SHOWN ARE FOR DESIGN PURPOSES ONLY. UNANTICIPATED COSTS ASSOCIATED WITH DIFFERENCES BETWEEN THE LISTED DEPTHS AND THE ACTUAL DEPTHS SHALL BE ACCEPTED BY THE CONTRACTOR.

DRAWN BY	CJC
CHECKED BY	MJM

INDEX MAP

A-00122496

COMMONWEALTH OF PENNSYLVANIA
MICHAEL J. MUTH
SURVEYOR
PROFESSIONAL
CONTRACT 397 1/1

SYMBOL	PUBLIC UTILITIES		
—S— —W—	WEST HILLS AREA WATER POLLUTION CONTROL AUTHORITY	RD #7, BOX 3 KITTANNING, PA 16201	COREY HELLER, MANAGER (724) 545-9126
—T—	WINDSTREAM	109 CRYTZER ROAD KITTANNING, PA 16201	BUCK SCHRECENGOST (724) 543-7286
— CTV —	COMCAST CABLE	ONE ADELPHIA DRIVE BLAIRSVILLE, PA 15717	RANDY GAULT (724) 459-9042
—G—	DOMINION PEOPLES	432 HYDE PARK ROAD LEECHBURG, PA 15656	MICHELLE SAXON (724) 842-4839
—E—	ALLEGHENY POWER	109A BRIAR HILL ROAD KITTANNING, PA 16201	DOUG GOOD (412) 548-3538
	PITTSBURGH AND SHAWMUT RAILROAD, INC.	P.O. BOX 336 WARREN, PA 16365	BILL GENTILMAN, PROPERTY MANAGER (814) 726-3552

PA ONE CALL SYSTEM, INC PHONE NO 1-800-242-1776
DESIGNERS SERIAL NUMBERS: 2556437 FOR SR 1038 IN EAST FRANKLIN TWP.
2556446 FOR SR 1038 IN APPLEWOLD BORO
2556441 FOR SR 4025 IN EAST FRANKLIN TWP.
2556452 FOR SR 4023 IN EAST FRANKLIN TWP.

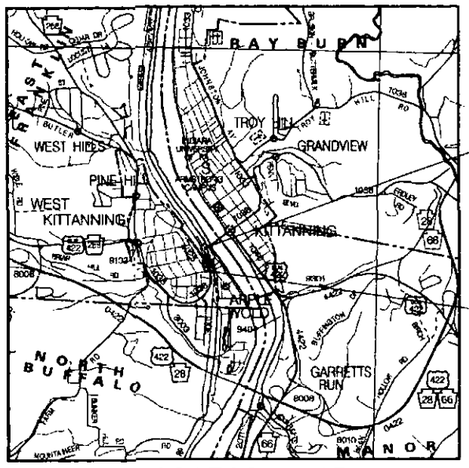

LIMIT OF WORK
STA 1943+75.00
SEG 0040 OFFSET 0112
SR 1038 SEC 150
EAST FRANKLIN TOWNSHIP
ARMSTRONG COUNTY

LIMIT OF WORK
STA 1964+00.00
SEG 0060 OFFSET 0159
SR 1038 SEC 150
EAST FRANKLIN TOWNSHIP
ARMSTRONG COUNTY

LOCATION MAP

LEGEND
STATE ROUTE
TOWNSHIP ROAD
PROJECT

SCALE
0 1 2 MILES

LIST OF EQUALITIES

NONE

CONSTRUCTION LENGTH OF PROJECT

STA 1944+50.00 TO STA 1963+27.29 = 1877.29 FT = 0.356 MI

OVERALL LENGTH OF PROJECT

STA 1943+75.00 TO STA 1964+00.00 = 2025.00 FT = 0.384 MI

CERTIFIED CORRECT PLANS
Engineer
Approved by Bureau of Transportation & Safety
PENNA. PUBLIC UTILITY COMMISSION
ATTEST
Secretary

DETAILS, OTHER THAN THOSE INDICATED, ARE ON THE FOLLOWING STANDARD DRAWINGS

RC-10M	APRIL 15, 2004	RC-58M	MARCH 30, 2006	BC-736M	JANUARY 21, 2003
RC-11M	APRIL 15, 2004	RC-59M	MARCH 30, 2006	BC-739M	JULY 24, 2006
RC-12M	MARCH 30, 2006	RC-64M	APRIL 15, 2004	BC-751M	JULY 29, 2005
RC-13M	APRIL 15, 2004	RC-65M	APRIL 15, 2004	BC-752M	JULY 29, 2005
RC-20M	MARCH 30, 2006	RC-67M	APRIL 15, 2007	BC-753M	JULY 29, 2005
RC-21M	MARCH 30, 2006	RC-70M	APRIL 15, 2004	BC-754M	JULY 24, 2006
RC-23M	MARCH 30, 2006	RC-80M	APRIL 15, 2004	BC-755M	JULY 29, 2005
RC-24M	MARCH 30, 2006	RC-81M	APRIL 15, 2004	BC-762M	JULY 24, 2006
RC-25M	MARCH 30, 2006	RC-82M	APRIL 15, 2004	BC-767M	JULY 24, 2006
RC-27M	MARCH 30, 2006	RC-83M	APRIL 15, 2004	BC-775M	JULY 29, 2005
RC-28M	MARCH 30, 2006	RC-84M	APRIL 15, 2004	BC-788M	JANUARY 21, 2003
RC-30M	MARCH 30, 2006	BC-701M	JULY 24, 2006	BC-795M	JANUARY 21, 2003
RC-31M	MARCH 30, 2006	BC-707M	JULY 24, 2006	TC-8600	MAY 25, 2007
RC-33M	MARCH 30, 2006	BC-716M	JULY 24, 2006	TC-8604	MAY 25, 2007
RC-34M	MARCH 30, 2006	BC-721M	JULY 29, 2005	TC-8700C	MAY 25, 2007
RC-35M	APRIL 15, 2004	BC-722M	JULY 24, 2006	TC-8702B	MAY 25, 2007
RC-39M	APRIL 15, 2004	BC-732M	JULY 24, 2006	TC-8716	MAY 25, 2007
RC-50M	MARCH 30, 2006	BC-734M	APRIL 15, 2004		
RC-52M	MARCH 30, 2006	BC-735M	JANUARY 21, 2003		

STRAIGHT LINE DIAGRAM DATA

STATE ROUTE	LIMITS OF CONSTRUCTION		PROPOSED CONSTRUCTION
	CONSTR STA	SEGMENT/OFFSET	
SR 4025	10+24.49 TO 29+25.00	10/0 TO 10/1900	22' OF 9" CEM CONC ON 4" TREATED PERM BASE COURSE
SR 4023	20+20.20 TO 22+00.00	10/0 TO 10/180	24' OF 9" CEM CONC ON 4" TREATED PERM BASE COURSE

TABULATION OF PROJECT COORDINATES

BASED ON AN ASSUMED COORDINATE SYSTEM

RTE	STATION	POINT	COORDINATES NORTH	COORDINATES EAST	BEARING
SR 1038 SURVEY & CONSTR	1948+25.26	PCC	8680.9759	10202.4300	
	1949+53.77	PI	8807.1316	10226.9091	N 10°58'52" E
	1950+81.35	PCC	8935.6243	10224.8906	N 0°54'00" W
	1951+94.78	PI	9049.0379	10223.1089	N 0°54'00" W
	1953+07.83	PT	9161.0690	10205.3649	N 9°00'00" W
	1956+60.33	PC	9509.2292	10150.2218	N 9°00'00" W
	1958+07.86	PI	9654.9379	10127.1438	N 9°00'00" W
	1959+54.36	PT	9792.9696	10075.0777	N 20°40'00" W
	1960+25.29	PC	9859.3332	10050.0451	N 20°40'00" W
	1961+91.35	PI	10014.7129	9991.4353	N 20°40'00" W
	1963+10.97	PT	10115.7310	10123.2433	N 52°32'00" E
	1975+09.33	POT	10844.6958	11074.3939	N 52°32'00" E
SR 4025 SURVEY & CONSTR	10+00.00	POT	9712.7477	10102.6742	
	10+52.12	PC	9687.6931	10056.9756	S 61°15'57" W
	10+91.65	PI	9668.6851	10022.3057	S 61°15'57" W
	11+17.00	PT	9700.6212	9998.9949	N 36°07'36" W
	13+89.10	POT	9920.4042	9838.5703	N 36°07'36" W
SR 4023 SURVEY & CONSTR	20+00.00	POT	10065.4229	10075.3400	
	23+66.49	POT	10391.4217	9907.8871	N 27°11'16" W
ALLEGHENY AVENUE CONSTR.	30+00.00	POT	10069.5314	10078.2497	
	32+45.41	POT	9900.4734	10256.1404	S 46°27'30" E

NOTE:
FOUR PLACE COORDINATES ARE FOR COMPUTATIONAL PURPOSES ONLY AND DO NOT IMPLY A PRECISION BEYOND TWO DECIMAL PLACES.

EARTHWORK SUMMARY ENTIRE PROJECT

THE INFORMATION ON ESTIMATED AMOUNTS OF EARTHWORK HAS BEEN USED IN THE PRELIMINARY ESTIMATE. DO NOT USE AS A WAIVER OF ANY PROVISIONS OF THE SPECIFICATIONS AND CONTRACTS.

CUBIC YARDS OF EXCAVATION						CUBIC YARDS OF COMPLETED EMBANKMENT *	
CLASS 1	CLASS 1A	CLASS 1B	CLASS 2	CLASS 3	CLASS 4		
11902	——	132	86	5943	4862	8744	

* INCLUDES ALL BORROW ITEMS.

DRAWN BY	CJC
CHECKED BY	MJM

DISTRICT	COUNTY	ROUTE	SECTION	SHEET
10-0	ARMSTRONG	1038	150	3 OF 45
EAST FRANKLIN TWP., WEST KITTANNING & APPLEWOLD BORO.'S				

REVISION NUMBER	REVISIONS	DATE	BY

GENERAL NOTES

THE LEGAL RIGHT-OF-WAY ON SR 1038, FORMERLY LR 69 & 251, FROM STATION 1943+75.00 TO STATION 1950+99.00 AND FROM STATION 1963+73.00 TO STATION 1964+00.00 IS ONE HUNDRED TWENTY (120) FEET BASED ON PLAN OF LR 69 AND 251, SIGNED BY THE GOVERNOR ON JULY 23, 1931.

THE LEGAL RIGHT-OF-WAY ON SR 1038, FORMERLY LR 69 & 251, FROM STATION 1950+99.00 TO STATION 1963+73.00 IS VARIABLE EIGHTY-THREE (83) FEET TO ONE HUNDRED TWENTY (120) FEET BASED ON RIGHT-OF-WAY PLAN OF SR 1038, SECTION 150 R/W SIGNED ON _____, 2007 AND RECORDED IN THE ARMSTRONG COUNTY RECORDER OF DEEDS OFFICE IN HIGHWAY PLAN BOOK ___, PAGE____.

THE LEGAL RIGHT-OF-WAY ON SR 4025, FORMERLY LR 03107, FROM STATION 10+68.25 TO STATION 12+26.00 IS VARIABLE THIRTY-THREE (33) FEET TO EIGHTY-SIX (86) FEET IN WIDTH BASED ON RIGHT-OF-WAY PLAN OF SR 1038, SECTION 150 R/W SIGNED ON _____, 2007 AND RECORDED IN THE ARMSTRONG COUNTY RECORDER OF DEEDS OFFICE IN HIGHWAY BOOK___, PAGE___.

THE LEGAL RIGHT-OF-WAY ON SR 4025, FORMERLY LR 03107, FROM STATION 12+26.00 TO STATION 29+25.00 IS THIRTY THREE (33) FEET IN WIDTH BASED ON PLAN OF LR 69 AND 251, SIGNED BY THE GOVERNOR ON JULY 23, 1931.

THE LEGAL RIGHT-OF-WAY ON SR 4023, FORMERLY LR 03024, FROM STATION 20+32.00 TO STATION 22+85.00 IS VARIABLE FORTY (40) FEET TO EIGHTY-THREE (83) FEET BASED ON RIGHT-OF-WAY PLAN OF SR 1038, SECTION 150 R/W SIGNED ON _____, 2007 AND RECORDED IN THE ARMSTRONG COUNTY RECORDER OF DEEDS OFFICE IN HIGHWAY PLAN BOOK ___, PAGE ___.

THE LEGAL RIGHT-OF-WAY ON ALLEGHENY AVENUE FROM STATION 30+00.00 TO STATION 33+00.00 IS VARIABLE SEVENTY-ONE (71) FEET TO NINETY (90) FEET BASED ON PLAN OF LR 03024, SIGNED BY THE GOVERNOR ON APRIL 5, 1937.

THE LEGAL RIGHT-OF-WAY ON FRANKLIN AVE. IS SIXTEEN (16) FEET IN WIDTH BASED ON BOYD S. HENRY PLAN OF LOTS RECORDED ON APRIL 4, 1922 IN THE ARMSTRONG COUNTY RECORDER'S OFFICE IN PLAN BOOK VOLUME 1 PAGE 217.

THE LEGAL RIGHT-OF-WAY OF THE FOOT PATH IS TEN (10) FEET IN WIDTH BASED ON KITTANNING HIGHLANDS PLAN OF LOTS, SUBDIVISION NO. 1, RECORDED ON SEPTEMBER 28, 1946 IN THE ARMSTRONG COUNTY RECORDER'S OFFICE IN PLAN BOOK VOLUME 2 PAGE 49.

CONSTRUCT PROJECT IN ACCORDANCE WITH PUBLICATION 408 SPECIFICATIONS DATED 2007.

DO NOT INTERFERE WITH THE OPERATION OF ANY FIRE HYDRANT, FIRE CALL BOX OR POLICE CALL BOX.

THIS IS A FEDERAL-AID PROJECT AND AS SUCH IS SUBJECT TO INSPECTION BY REPRESENTATIVES OF THE FEDERAL HIGHWAY ADMINISTRATION AND THE PENNSYLVANIA DEPARTMENT OF TRANSPORTATION.

THREE WORKING DAYS PRIOR TO EXCAVATION, THE CONTRACTOR MUST CONTACT THE PA ONE CALL SYSTEM, INC., PHONE 1-800-242-1776, SERIAL NOS. _____, _____ & _____ FOR E. FRANKLIN TWP. & SERIAL NO. _____ FOR APPLEWOLD BOROUGH.

TEMPORARY CONSTRUCTION EASEMENTS ARE REQUIRED ONLY UNTIL THE CONSTRUCTION OR WORK INDICATED BY THE PLAN IS COMPLETED, UNLESS SOONER RELINQUISHED IN WRITING BY THE DEPARTMENT.

DRAINAGE EASEMENT. AN AREA WHICH SHALL ALLOW THE DEPARTMENT TO ENTER THE PROPERTY, AS NECESSARY, TO CONSTRUCT OR ALTER THE COURSE OF THE DRAINAGE AND TO MAKE SUCH FUTURE, REASONABLE ENTRIES AS NECESSARY TO MAINTAIN OR RECONSTRUCT THE DRAINAGE FACILITY FOR THE PROTECTION OF THE HIGHWAY. IT SHALL NOT PREVENT THE PROPERTY OWNER FROM MAKING ANY USE OF THE AREA WHICH IS NOT DETRIMENTAL TO THE NECESSARY FLOW OF WATER. HOWEVER, NO STRUCTURE OF ANY KIND MAY BE ERECTED IN THE DESIGNATED AREA, NOR MAY ANY PIPE OR DITCH BE CONNECTED TO THE DEPARTMENT'S PIPE OR DITCH WITHOUT ADVANCED WRITTEN APPROVAL BY THE DEPARTMENT OF TRANSPORTATION.

UNDERGROUND ANCHOR EASEMENT. AN AREA WHICH SHALL ALLOW THE DEPARTMENT TO ENTER THE PROPERTY, AS NECESSARY, TO CONSTRUCT OR ALTER THE ANCHORS AND TO MAKE SUCH FUTURE, REASONABLE ENTRIES AS NECESSARY TO MAINTAIN OR RECONSTRUCT THE ANCHORS FOR THE PROTECTION OF THE HIGHWAY. IT SHALL NOT PREVENT THE OWNER FROM MAKING USE OF THE SURFACE FOR FARMING, PARKING AND SIMILAR PURPOSES WHICH SHALL NOT INJURE THE ANCHORS. HOWEVER, NO STRUCTURE OF ANY KIND MAY BE ERECTED THEREON, NOR MAY ANY EXCAVATION OR DRILLING BE ALLOWED WITHOUT ADVANCED WRITTEN APPROVAL BY THE DEPARTMENT OF TRANSPORTATION.

THE HORIZONTAL SURVEY INFORMATION IS BASED ON AN ASSUMED COORDINATE SYSTEM.

THE VERTICAL CONTROL ELEVATIONS ARE BASED UPON THE NATIONAL GEODETIC VERTICAL DATUM (NGVD) OF 1929.

ALL CURVE DATA IS BASED ON THE ARC DEFINITION UNLESS OTHERWISE NOTED.

SEEDING:

SEEDING AND SOIL SUPPLEMENTS - FORMULA B FOR LAWN AREAS.

SEEDING AND SOIL SUPPLEMENTS - FORMULA D FOR SLOPES FLATTER THAN 3:1.

SEEDING AND SOIL SUPPLEMENTS - FORMULA L FOR SLOPES STEEPER THAN 3:1.

A-00122496

DISTRICT	COUNTY	ROUTE	SECTION	SHEET
10-0	ARMSTRONG	1038	150	4 OF 45
EAST FRANKLIN TWP., WEST KITTANNING & APPLEWOLD BORO.'S				

REVISION NUMBER	REVISIONS	DATE	BY

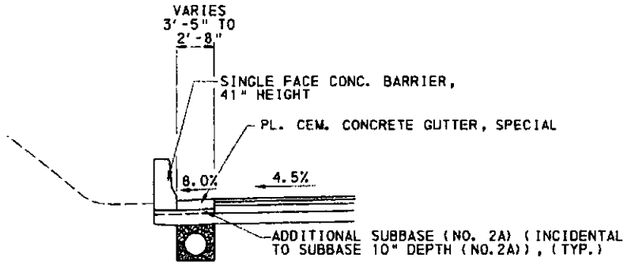

PARTIAL SECTION C

STA. 1950+10.00 TO STA. 1950+81.35 RT.

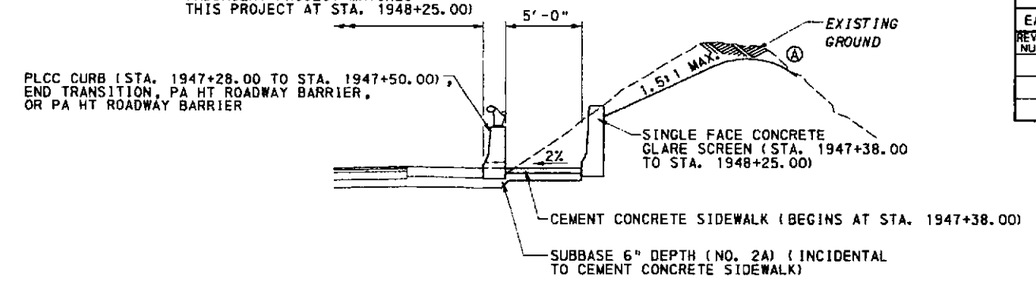

PARTIAL TYPICAL SECTION

STA. 1947+28.00 TO STA. 1948+25.00 RT.

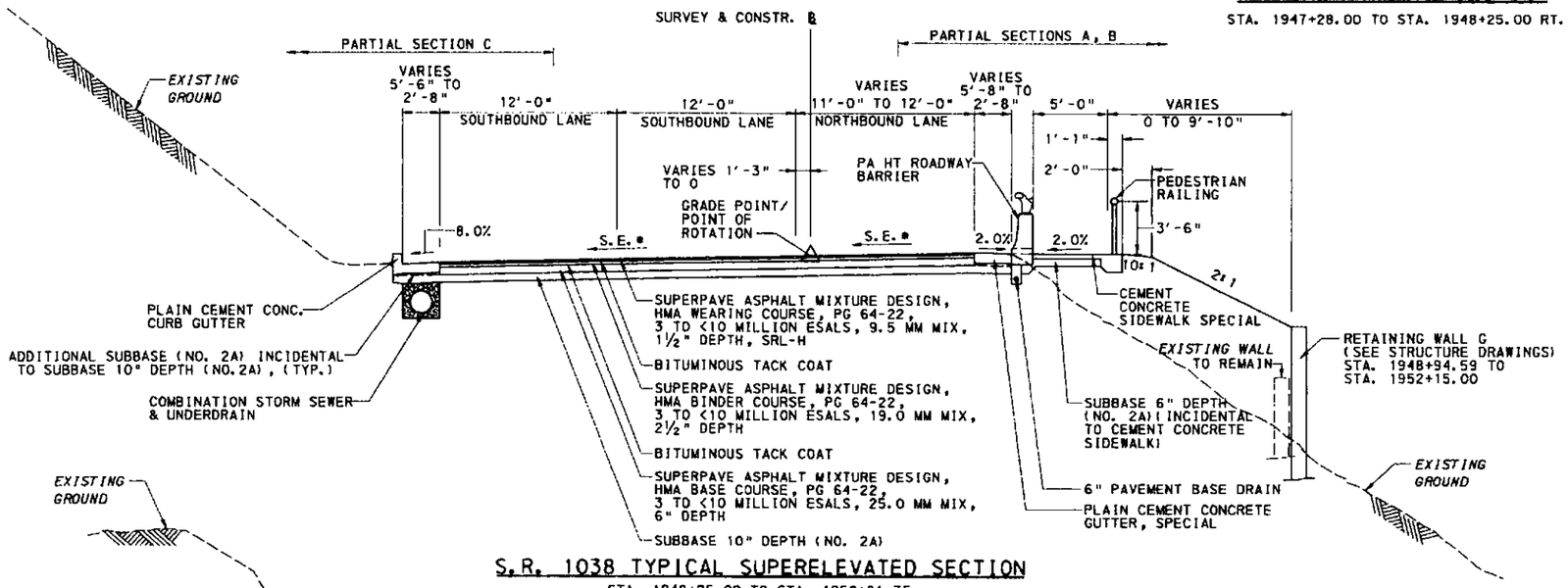

S.R. 1038 TYPICAL SUPERELEVATED SECTION

STA. 1948+25.00 TO STA. 1950+81.35

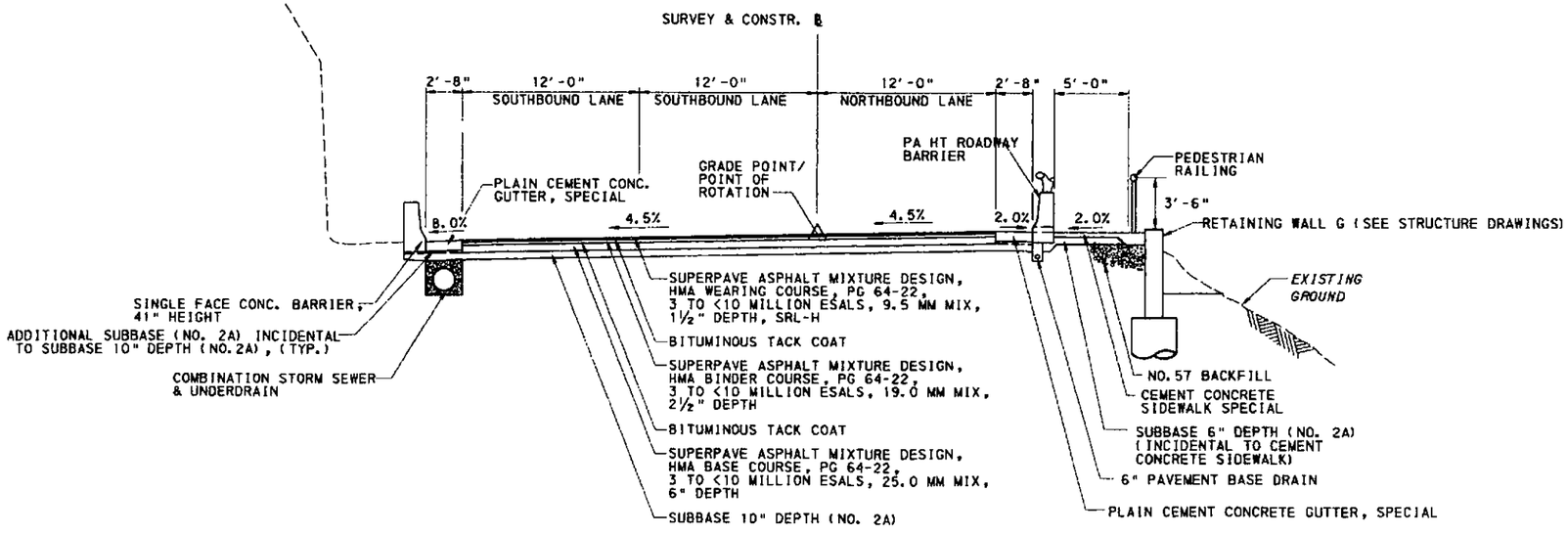

S.R. 1038 TYPICAL SUPERELEVATED SECTION

STA. 1950+81.35 TO STA. 1952+15.00

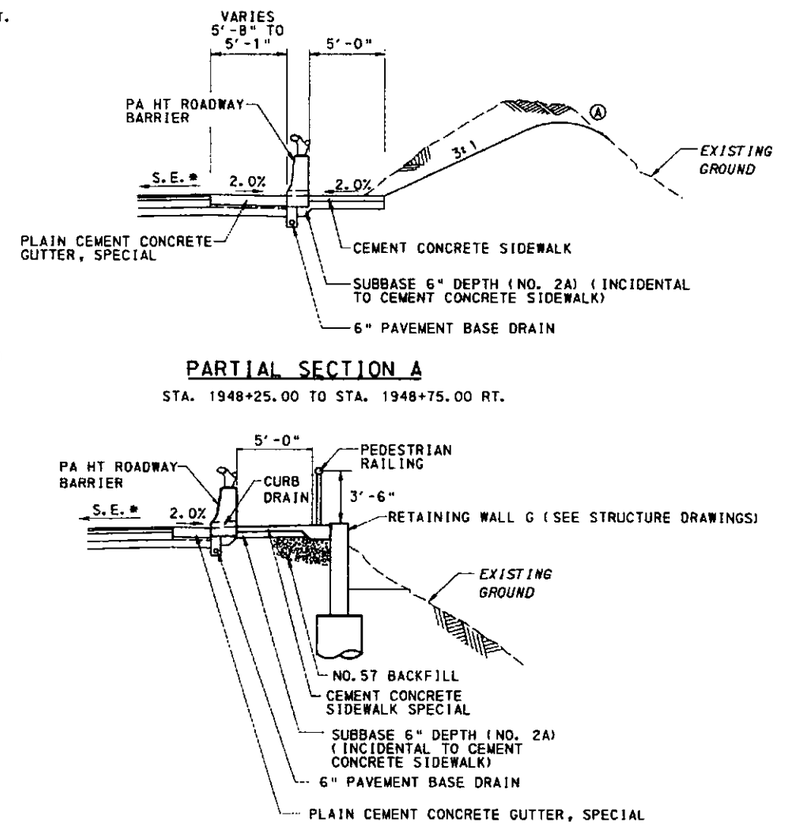

PARTIAL SECTION A

STA. 1948+25.00 TO STA. 1948+75.00 RT.

PARTIAL SECTION B

STA. 1949+85.00 TO STA. 1951+10.00 RT.

NOTES:

Ⓐ ROUNDING OF CUT SLOPES IN ACCORDANCE WITH RC-10M

* SLOPE VARIES SEE CROSS SECTIONS

SEEDING:

SEEDING AND SOIL SUPPLEMENTS - FORMULA B FOR LAWN AREAS.

SEEDING AND SOIL SUPPLEMENTS - FORMULA D FOR SLOPES FLATTER THAN 3:1.

SEEDING AND SOIL SUPPLEMENTS - FORMULA L FOR SLOPES STEEPER THAN 3:1.

TYPICAL SECTIONS

A-00122496

DRAWN BY	CJC
CHECKED BY	MJM

COMMONWEALTH OF PENNSYLVANIA — REGISTERED PROFESSIONAL — MICHAEL J. MUTH — ENGINEER

TYPSECT.dgn 7/16/2007

DISTRICT	COUNTY	ROUTE	SECTION	SHEET
10-0	ARMSTRONG	1038	150	5 OF 45
EAST FRANKLIN TWP., WEST KITTANNING & APPLEWOLD BORO.'S				

REVISION NUMBER	REVISIONS	DATE	BY

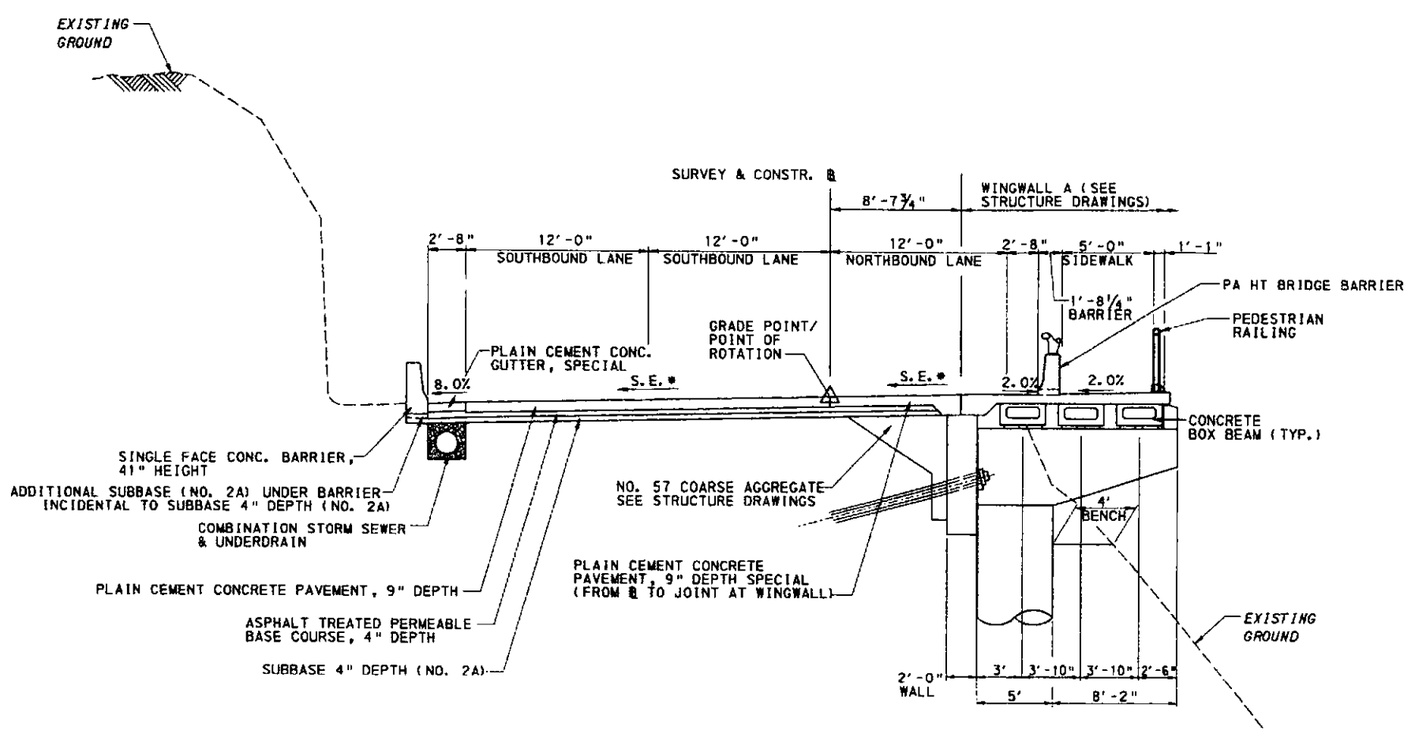

S.R. 1038 TYPICAL SUPERELEVATED SECTION

STA. 1952+15.00 TO STA. 1953+71.83
(BRIDGE APPROACH SLAB, STA. 1953+46.83 TO STA. 1953+71.83)

NOTE:

* SLOPE VARIES, SEE CROSS SECTIONS

SEEDING:

SEEDING AND SOIL SUPPLEMENTS - FORMULA B FOR LAWN AREAS.

SEEDING AND SOIL SUPPLEMENTS - FORMULA D FOR SLOPES FLATTER THAN 3:1.

SEEDING AND SOIL SUPPLEMENTS - FORMULA L FOR SLOPES STEEPER THAN 3:1.

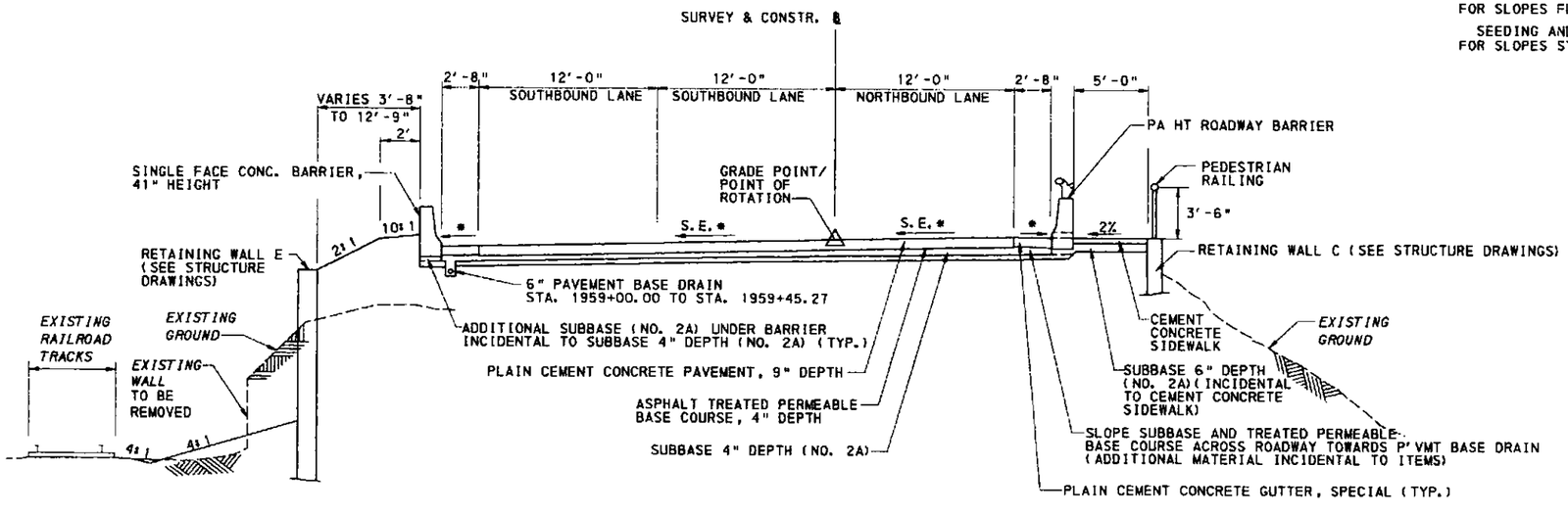

S.R. 1038 TYPICAL SUPERELEVATED SECTION

STA. 1958+98.91 TO STA. 1960+04.39
(BRIDGE APPROACH SLAB, STA. 1958+98.91 TO STA. 1959+24.25)

DRAWN BY	CJC
CHECKED BY	MJM

TYPICAL SECTIONS

A-00122496

NCNTyp02.dgn

DISTRICT	COUNTY	ROUTE	SECTION	SHEET
10-0	ARMSTRONG	1038	150	6 OF 45
EAST FRANKLIN TWP., WEST KITTANNING & APPLEWOLD BORO.'S				

REVISION NUMBER	REVISIONS	DATE	BY

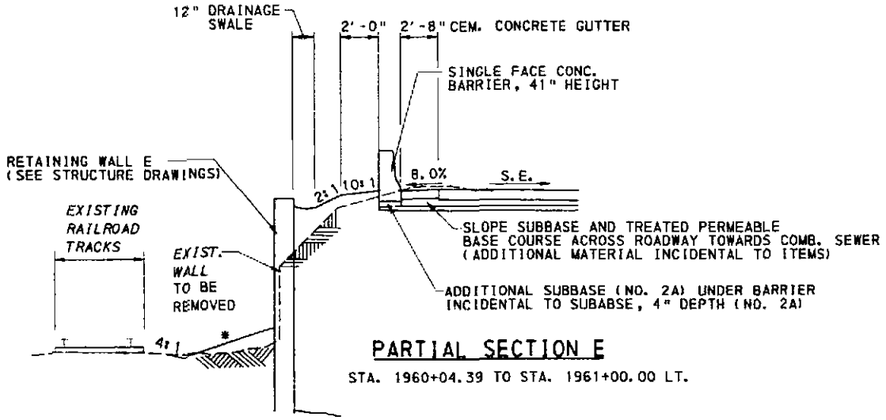

PARTIAL SECTION E

STA. 1960+04.39 TO STA. 1961+00.00 LT.

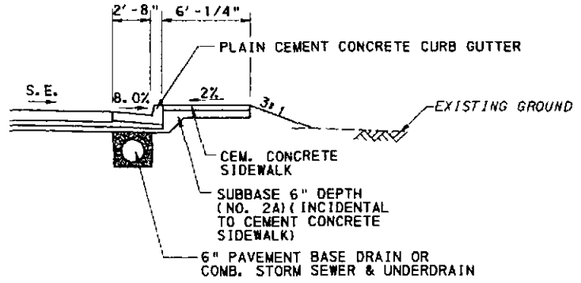

PARTIAL SECTION F

STA. 1961+00.00 TO STA. 1962+97.54 RT.

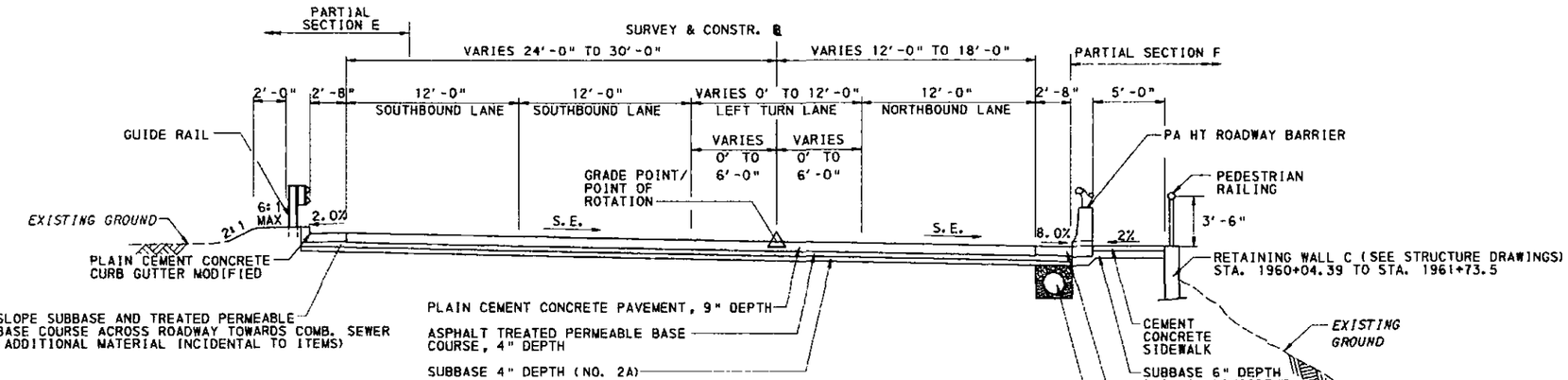

S.R. 1038 TYPICAL SUPERELEVATED SECTION

STA. 1960+04.39 TO STA. 1962+97.54

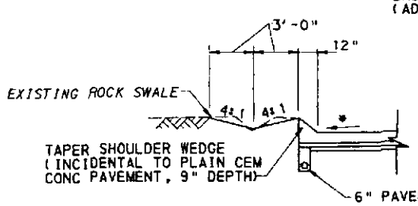

PARTIAL SECTION G

STA. 21+00.00 TO STA. 22+00.00 LT.

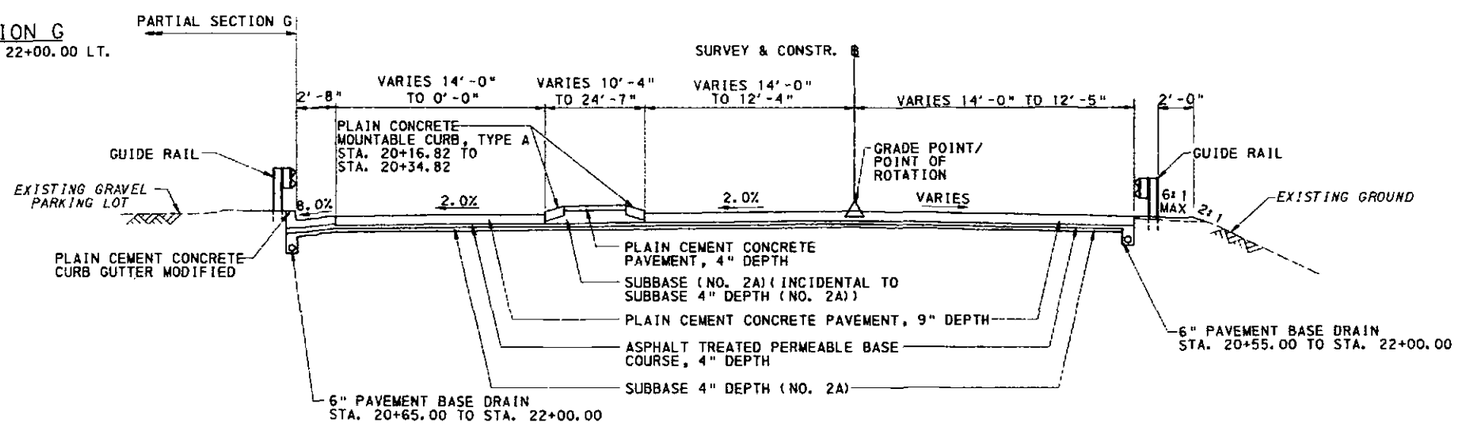

S.R. 4023 (TARRTOWN ROAD) TYPICAL TANGENT SECTION

STA. 20+20.20 TO STA. 22+00.00

NOTE:

* SLOPE VARIES, SEE CROSS SECTIONS

SEEDING:

SEEDING AND SOIL SUPPLEMENTS - FORMULA B FOR LAWN AREAS.

SEEDING AND SOIL SUPPLEMENTS - FORMULA D FOR SLOPES FLATTER THAN 3:1.

SEEDING AND SOIL SUPPLEMENTS - FORMULA L FOR SLOPES STEEPER THAN 3:1.

A-00122496

COMMONWEALTH OF PENNSYLVANIA — PROFESSIONAL — MICHAEL J. MUTH — ENGINEER

DRAWN BY	CJC
CHECKED BY	MJM

TYPICAL SECTIONS

N:\projects\0432\roadway\plan\CN-typ03.dgn 7/10/2007

DISTRICT	COUNTY	ROUTE	SECTION	SHEET
10-0	ARMSTRONG	1038	150	7 OF 45
EAST FRANKLIN TWP., WEST KITTANNING & APPLEWOLD BORO.'S				

REVISION NUMBER	REVISIONS	DATE	BY

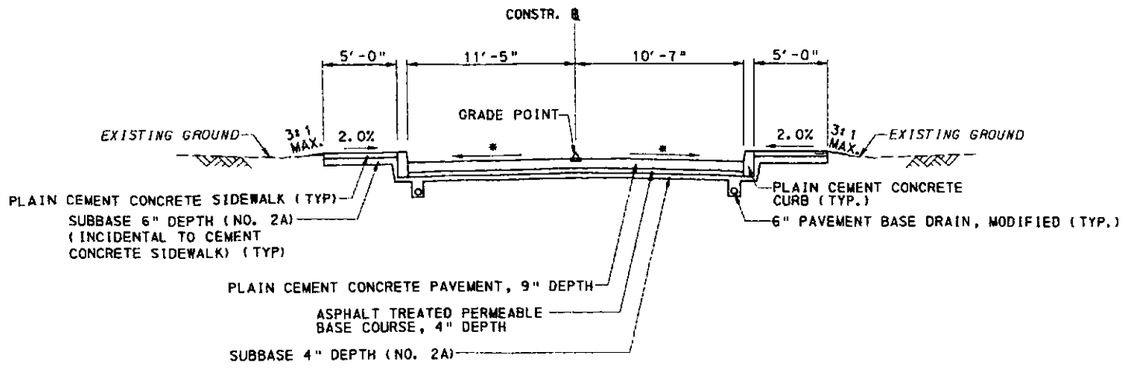

ALLEGHENY AVE. TYPICAL SECTION

STA. 30+18.17 TO STA. 31+00.00

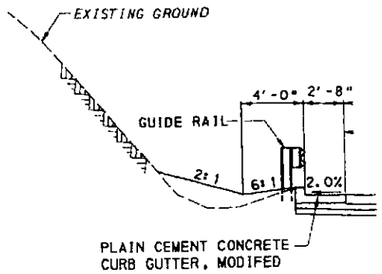

PARTIAL SECTION H

STA. 11+16.00 TO STA. 11+28.50

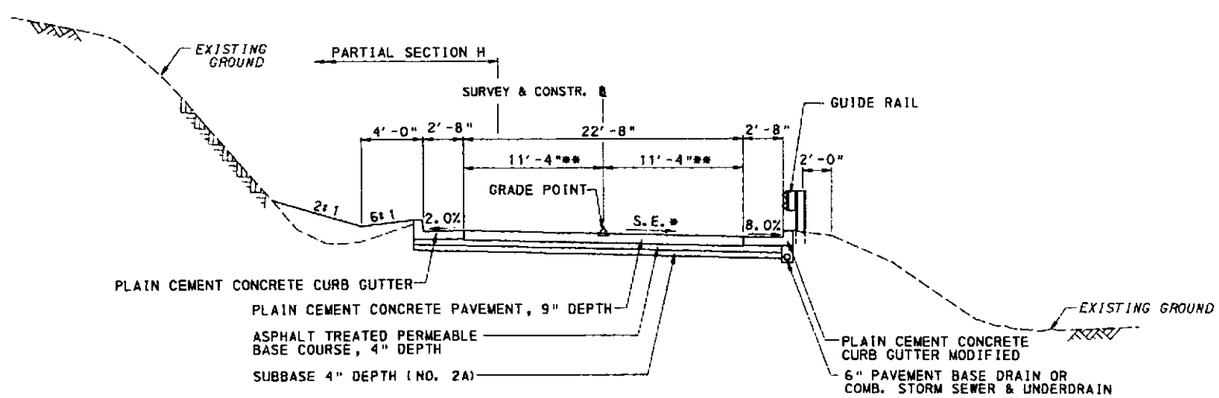

S.R. 4025 (PINE HILL ROAD) TYPICAL SUPERELEVATED SECTION

STA. 11+06.00 TO STA. 12+25.73

NOTES:

* SLOPE VARIES SEE CROSS SECTIONS

** WIDTH VARIES FROM 11'-4" TO 9'-1/2" FROM STA. 11+17.00 TO STA. 12+00.00 AND FROM 9'-1/2" FROM STA. 12+00.00 TO STA. 12+25.73

SEEDING:

SEEDING AND SOIL SUPPLEMENTS - FORMULA B FOR LAWN AREAS.

SEEDING AND SOIL SUPPLEMENTS - FORMULA D FOR SLOPES FLATTER THAN 3:1.

SEEDING AND SOIL SUPPLEMENTS - FORMULA L FOR SLOPES STEEPER THAN 3:1.

A-00122496

TYPICAL SECTIONS

DRAWN BY	CJC
CHECKED BY	MJM

H:\project\0432\roadway\pr(ch).

DISTRICT	COUNTY	ROUTE	SECTION	SHEET
10-0	ARMSTRONG	1038	150	8 OF 45

EAST FRANKLIN TWP., WEST KITTANNING & APPLEWOLD BORO.'S

REVISION NUMBER	REVISIONS	DATE	BY

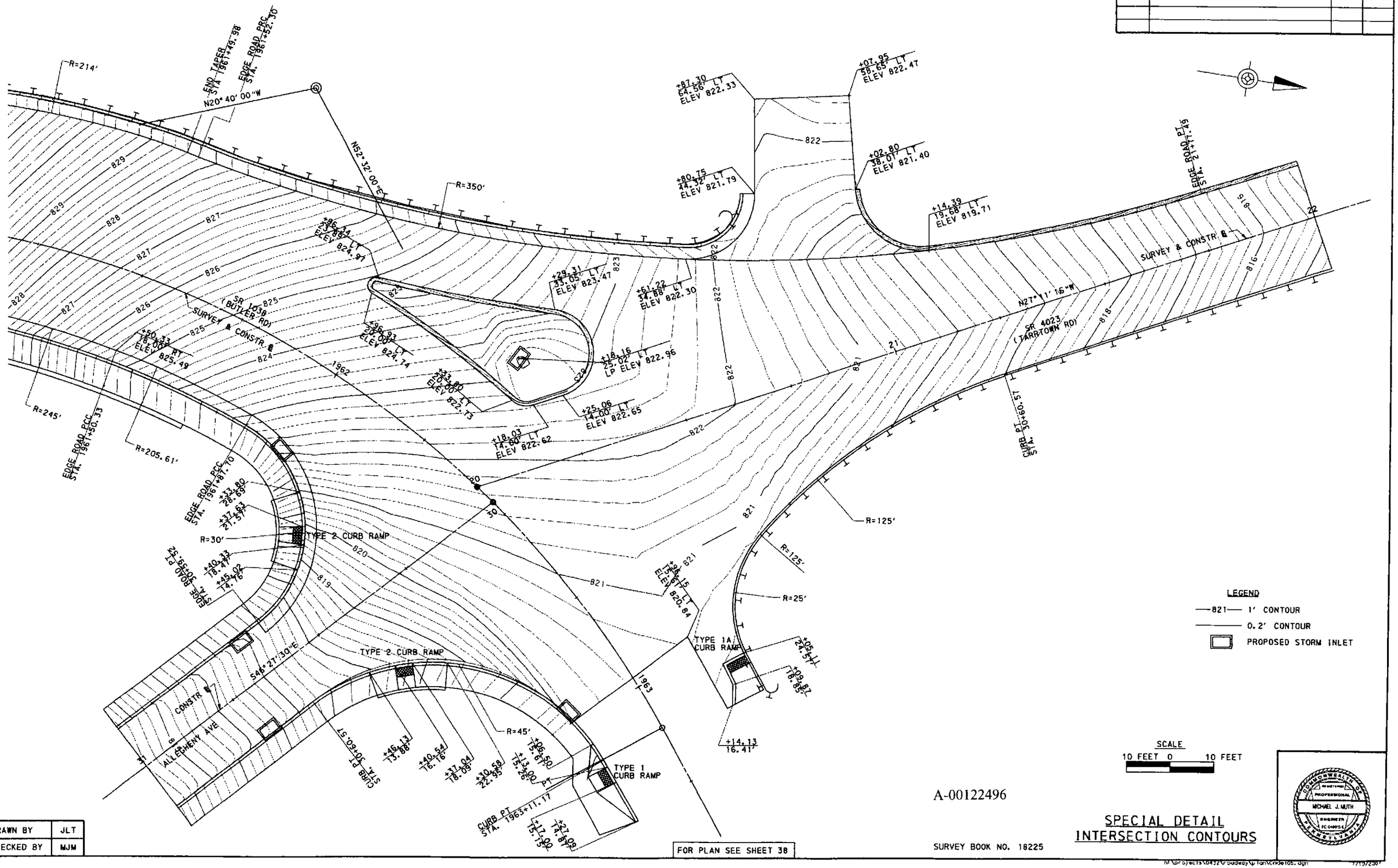

LEGEND

—821— 1' CONTOUR

——— 0.2' CONTOUR

PROPOSED STORM INLET

SCALE

10 FEET 0 10 FEET

A-00122496

SURVEY BOOK NO. 18225

SPECIAL DETAIL
INTERSECTION CONTOURS

DRAWN BY	JLT
CHECKED BY	MJM

FOR PLAN SEE SHEET 38

DISTRICT	COUNTY	ROUTE	SECTION	SHEET
10-0	ARMSTRONG	1038	150	9 OF 45
EAST FRANKLIN TWP., WEST KITTANNING & APPLEWOLD BORO.'S				

REVISION NUMBER	REVISIONS	DATE	BY

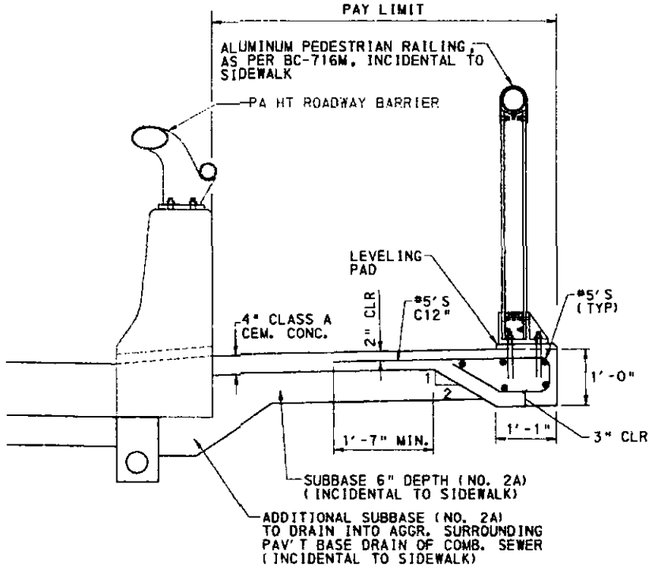

CEMENT CONCRETE SIDEWALK, SPECIAL

(ITEM NO 9676-0001)
NO SCALE

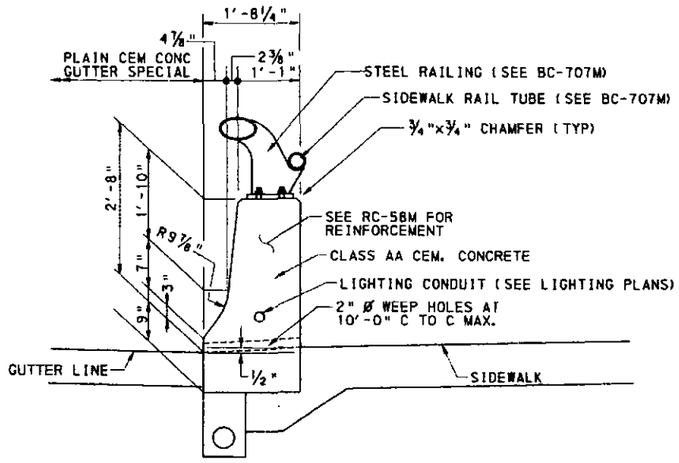

PA HT ROADWAY BARRIER

(ITEM NO 9000-0055)
NO SCALE

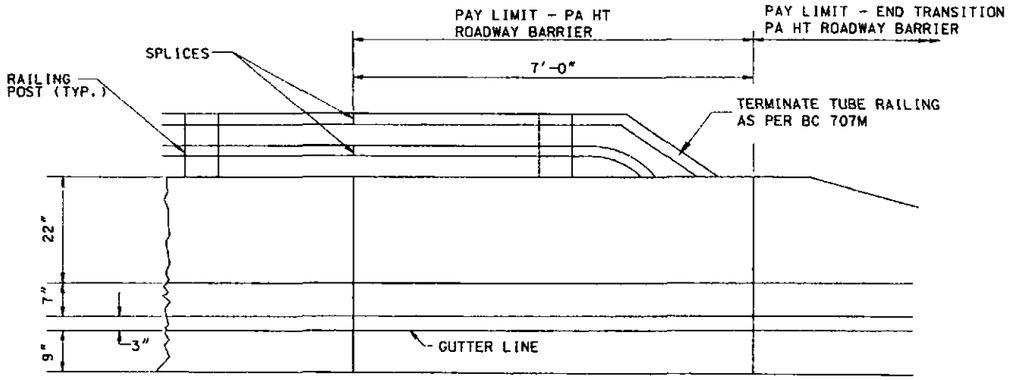

PA HT ROADWAY BARRIER-ELEVATION

(ITEM NO 9000-0055)
NO SCALE

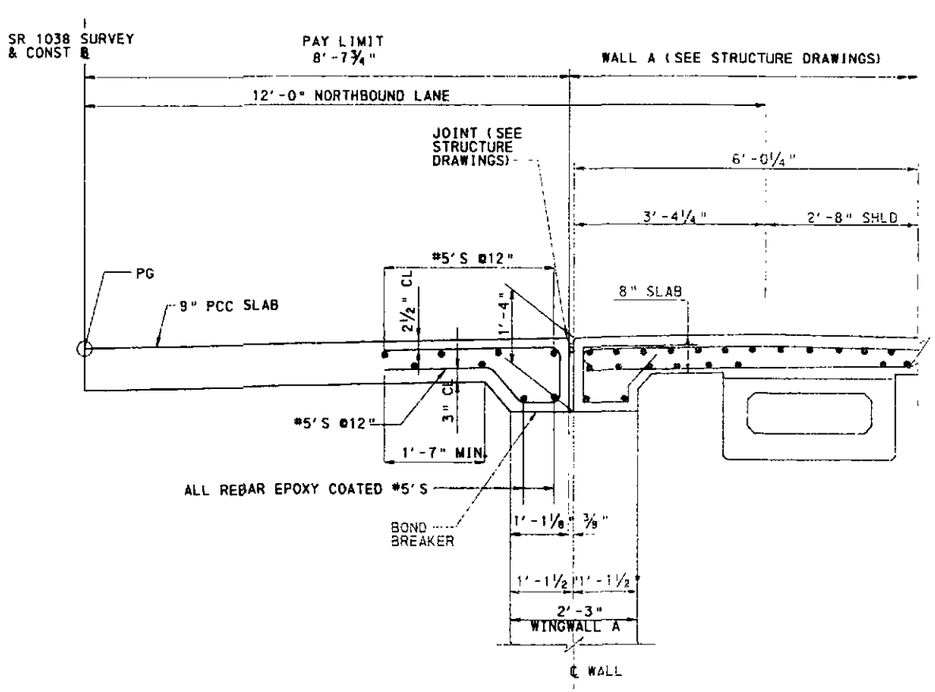

PLAIN CEMENT CONCRETE PAVEMENT, 9" DEPTH, SPECIAL

(ITEM NO 9501-0030)
NO SCALE

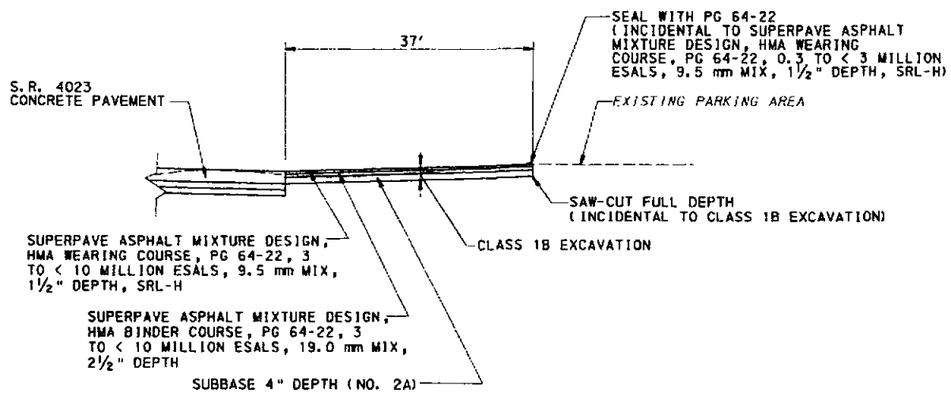

BITUMINOUS DRIVE CONSTRUCTION ADJACENT TO S.R. 4023 (TARRTOWN RD.)

DRAWN BY	MJM
CHECKED BY	CJC

A-00122496

SPECIAL DETAILS

COMMONWEALTH OF PENNSYLVANIA
REGISTERED PROFESSIONAL
MICHAEL J. MUTH
ENGINEER

h:\projects\0432\roadway\plan\cnde108.dgn

DISTRICT	COUNTY	ROUTE	SECTION	SHEET
10-0	ARMSTRONG	1038	150	10 OF 45

EAST FRANKLIN TWP., WEST KITTANNING & APPLEWOLD BORO.'S

REVISION NUMBER	REVISIONS	DATE	BY

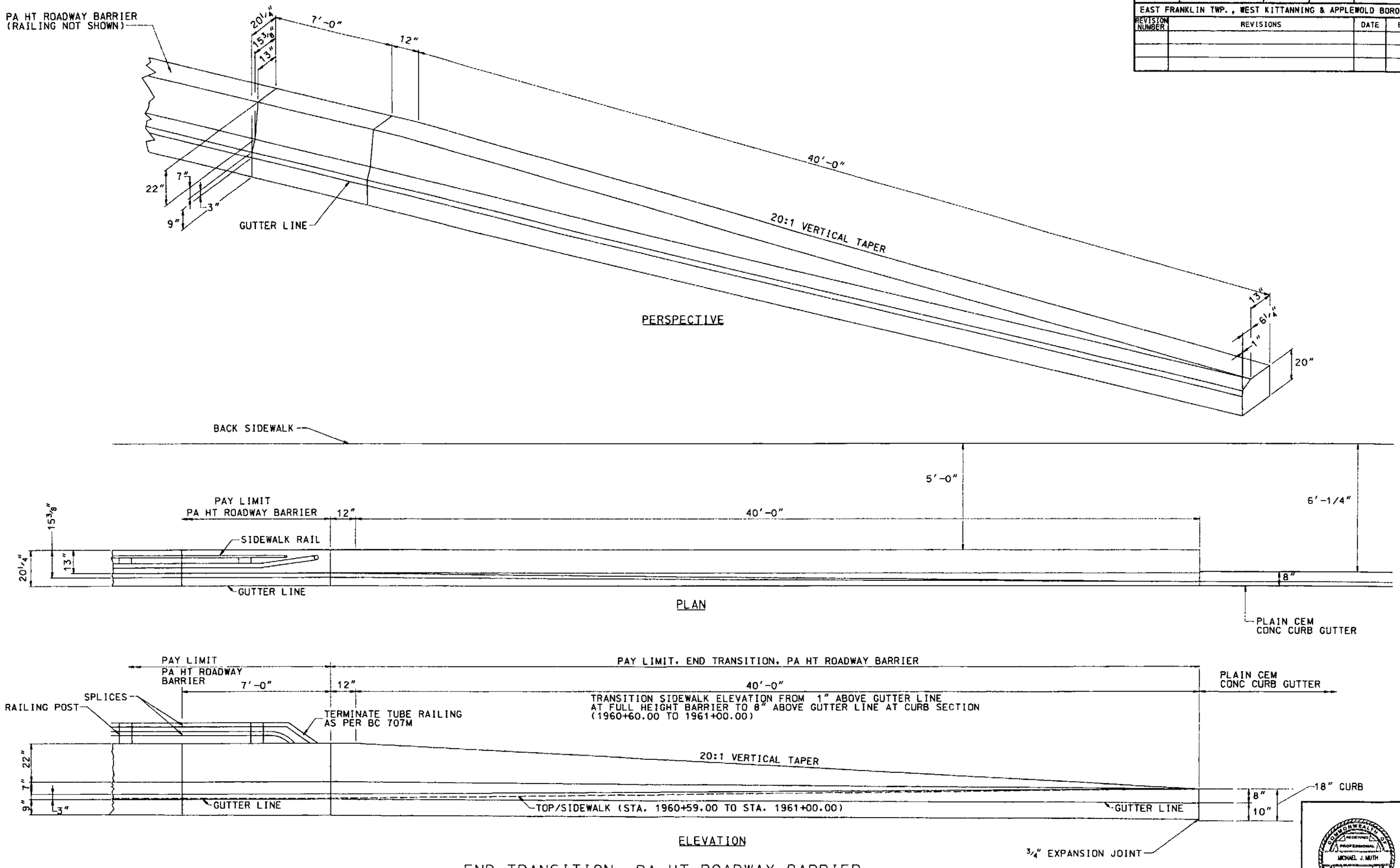

END TRANSITION, PA HT ROADWAY BARRIER

(ITEM NO. 9623-0121)
NO SCALE

A-00122496

SPECIAL DETAILS

DRAWN BY	MJM
CHECKED BY	CJC

DISTRICT	COUNTY	ROUTE	SECTION	SHEET
10-0	ARMSTRONG	1038	150	11 OF 45

EAST FRANKLIN TWP., WEST KITTANNING & APPLEWOLD BORO.'S

REVISION NUMBER	REVISIONS	DATE	BY

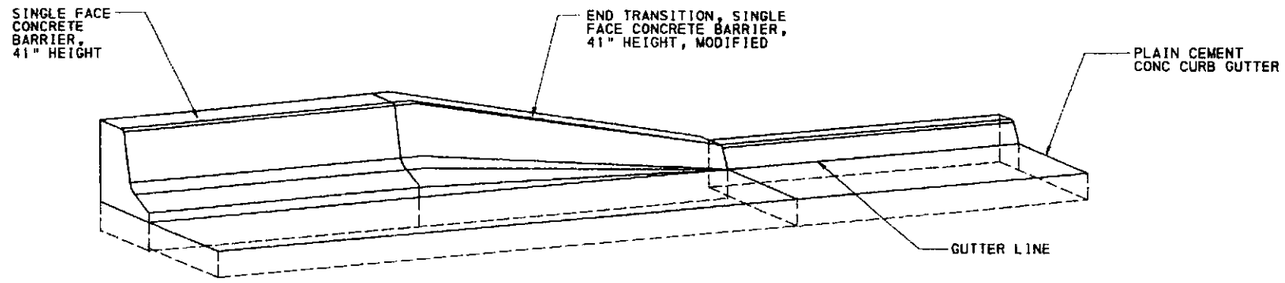

ISOMETRIC VIEW

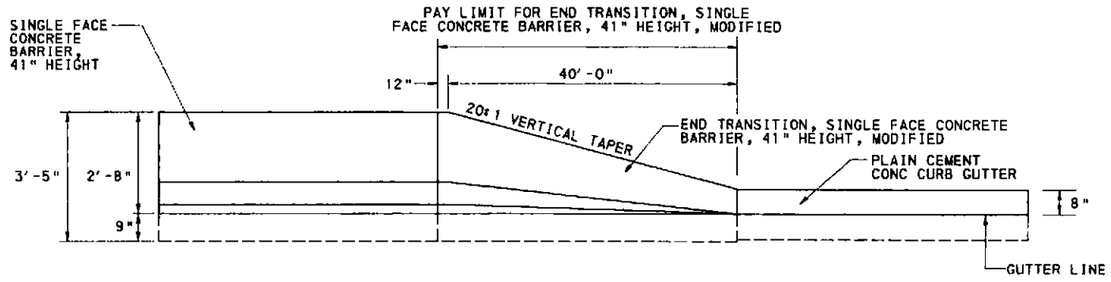

FRONT VIEW

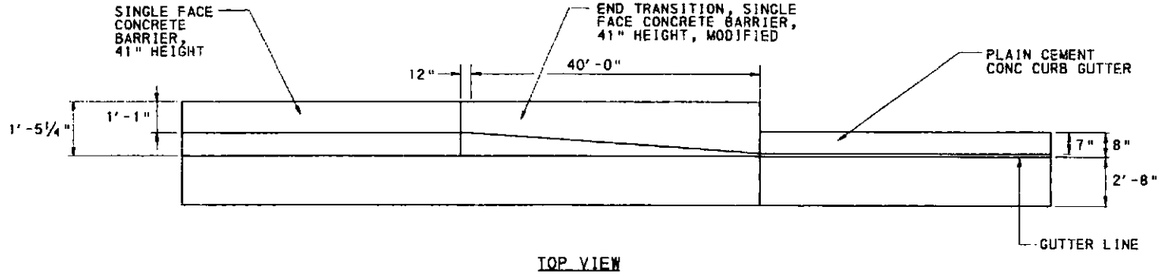

TOP VIEW

END TRANSITION, SINGLE FACE CONCRETE BARRIER, 41" HEIGHT MODIFIED

ITEM NO 4623-0121
NO SCALE

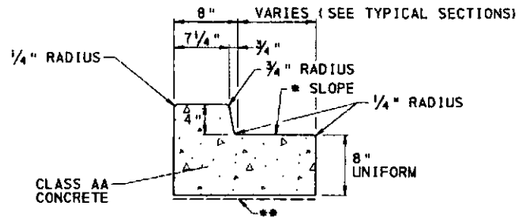

PLAIN CEMENT CONCRETE CURB GUTTER MODIFIED

(ITEM NO 4641-0005)
NO SCALE

** ------ REPRESENTS WIDTH OF GUTTER FOR COMPUTING PAY AREA

* SEE TYPICAL SECTIONS AND/OR CROSS SECTIONS

NOTE

FOR DETAILS NOT SHOWN
SEE PENNDOT STD. DWG. RC-64M

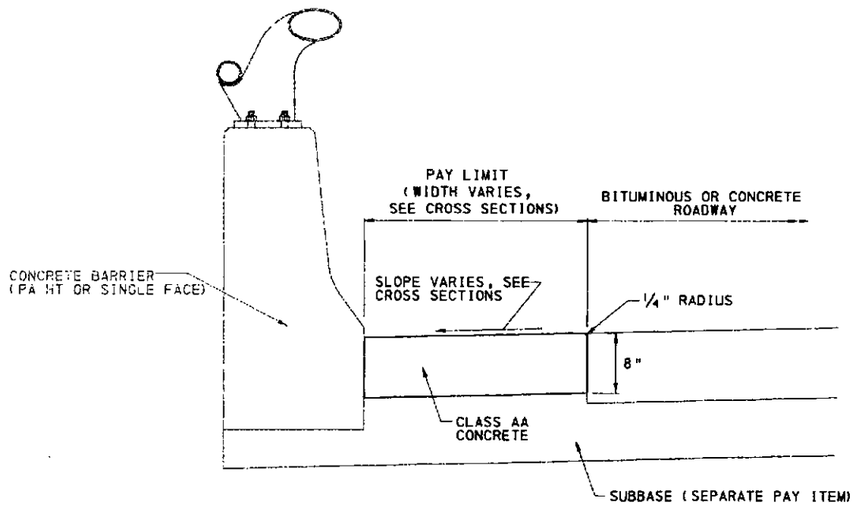

PLAIN CEMENT CONCRETE GUTTER, SPECIAL

(ITEM NO 9000-0025)
NO SCALE

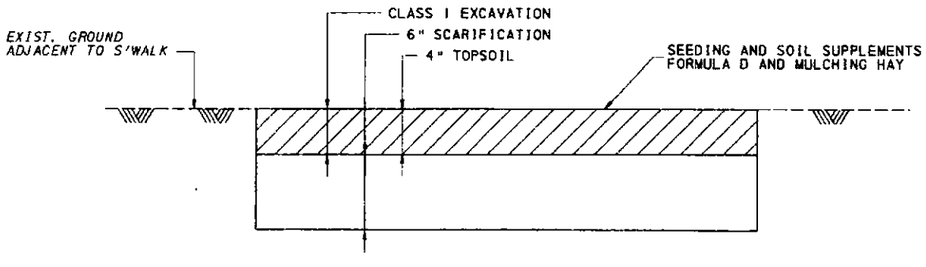

SIDEWALK REMOVAL DETAIL
(OUTSIDE GRADING LIMITS)
NO SCALE

DRAWN BY	MJM
CHECKED BY	CJC

A-00122496

SPECIAL DETAILS

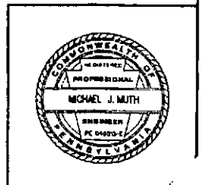

hr\projects\0432\roadway\plan\Cnde:04.dgn

DISTRICT	COUNTY	ROUTE	SECTION	SHEET
10-0	ARMSTRONG	1038	150	12 OF 45

EAST FRANKLIN TWP., WEST KITTANNING & APPLEWOLD BORO.'S

REVISION NUMBER	REVISIONS	DATE	BY

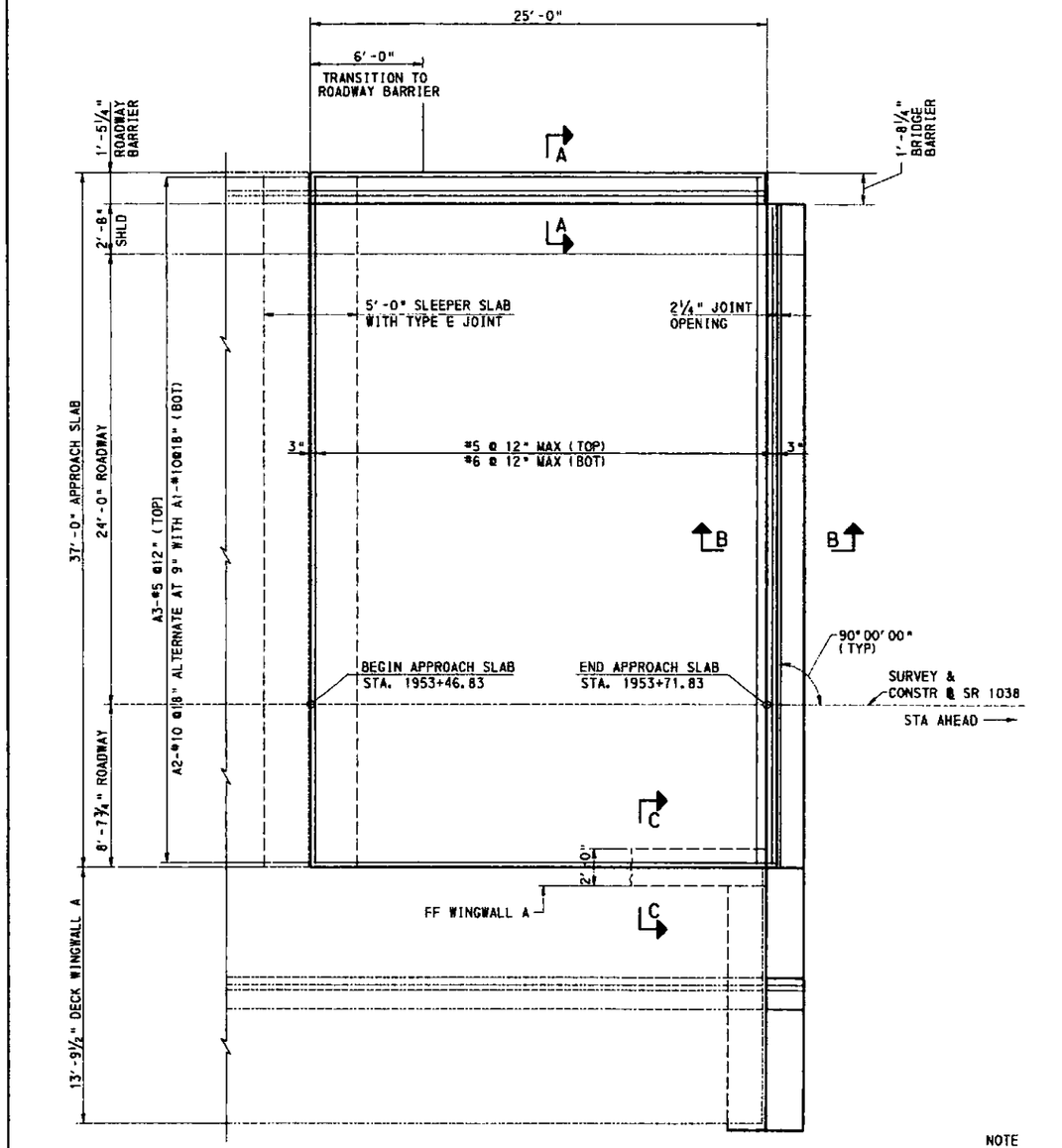

PLAN - BRIDGE APPROACH SLAB AT ABUTMENT 1

(ITEM NO 9000-0052)

4' 2' 0' 4'
SCALE

NOTE
SEE RC-23M FOR ADDITIONAL DETAILS

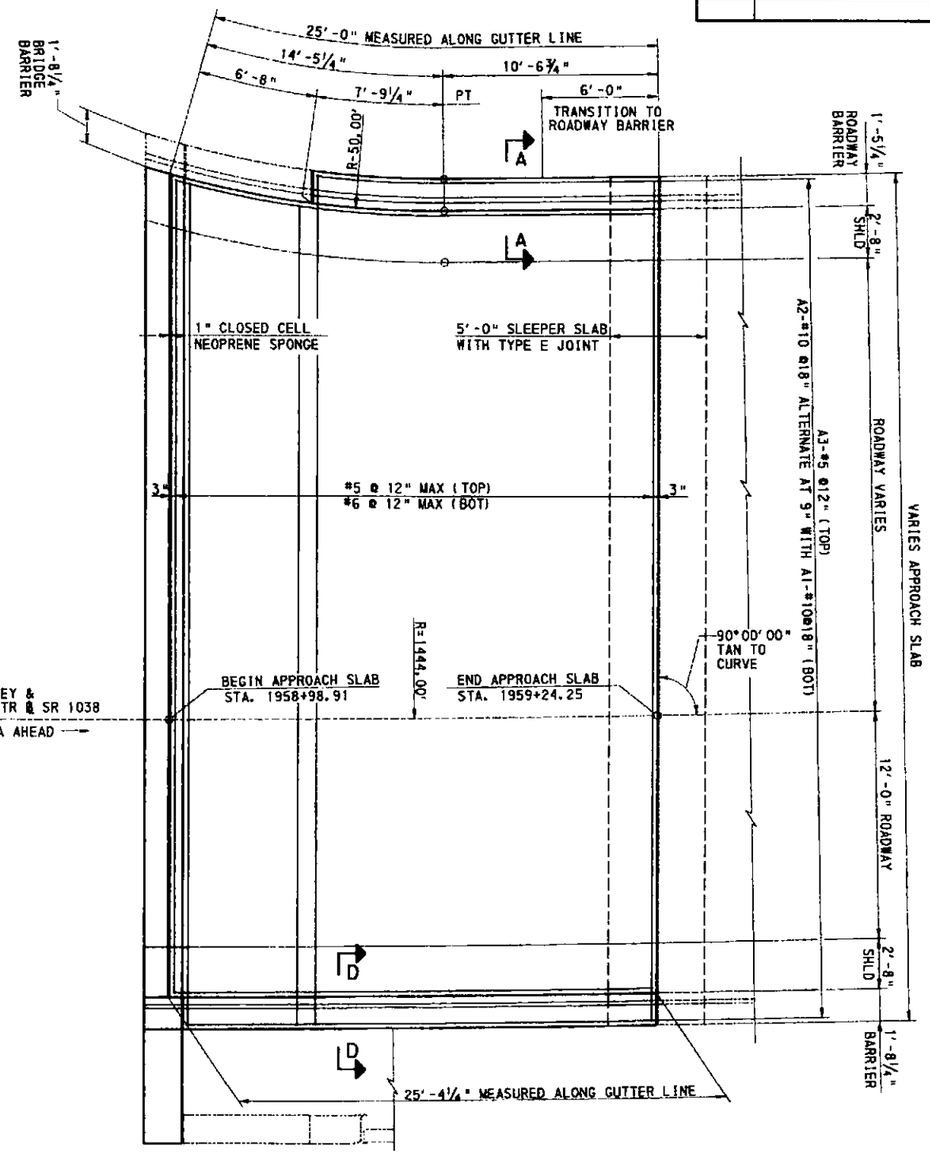

PLAN - BRIDGE APPROACH SLAB AT ABUTMENT 2

(ITEM NO 9000-0053)

4' 2' 0' 4'
SCALE

A-00122496

NOTES:

* FOR SECTIONS A-A THRU D-D AND ADDITIONAL NOTES SEE SHEET 14

SPECIAL DETAILS

DRAWN BY	RLG
CHECKED BY	KAM

COMMONWEALTH OF PENNSYLVANIA
REGISTERED PROFESSIONAL
MICHAEL J. MUTH
ENGINEER
PE-041910-E

hl\projects\0432\roadway\plan\cndet12.dgn 7/10/72

DISTRICT	COUNTY	ROUTE	SECTION	SHEET
10-0	ARMSTRONG	1038	150	13 OF 45
EAST FRANKLIN TWP., WEST KITTANNING & APPLEWOLD BORO.'S				

REVISION NUMBER	REVISIONS	DATE	BY

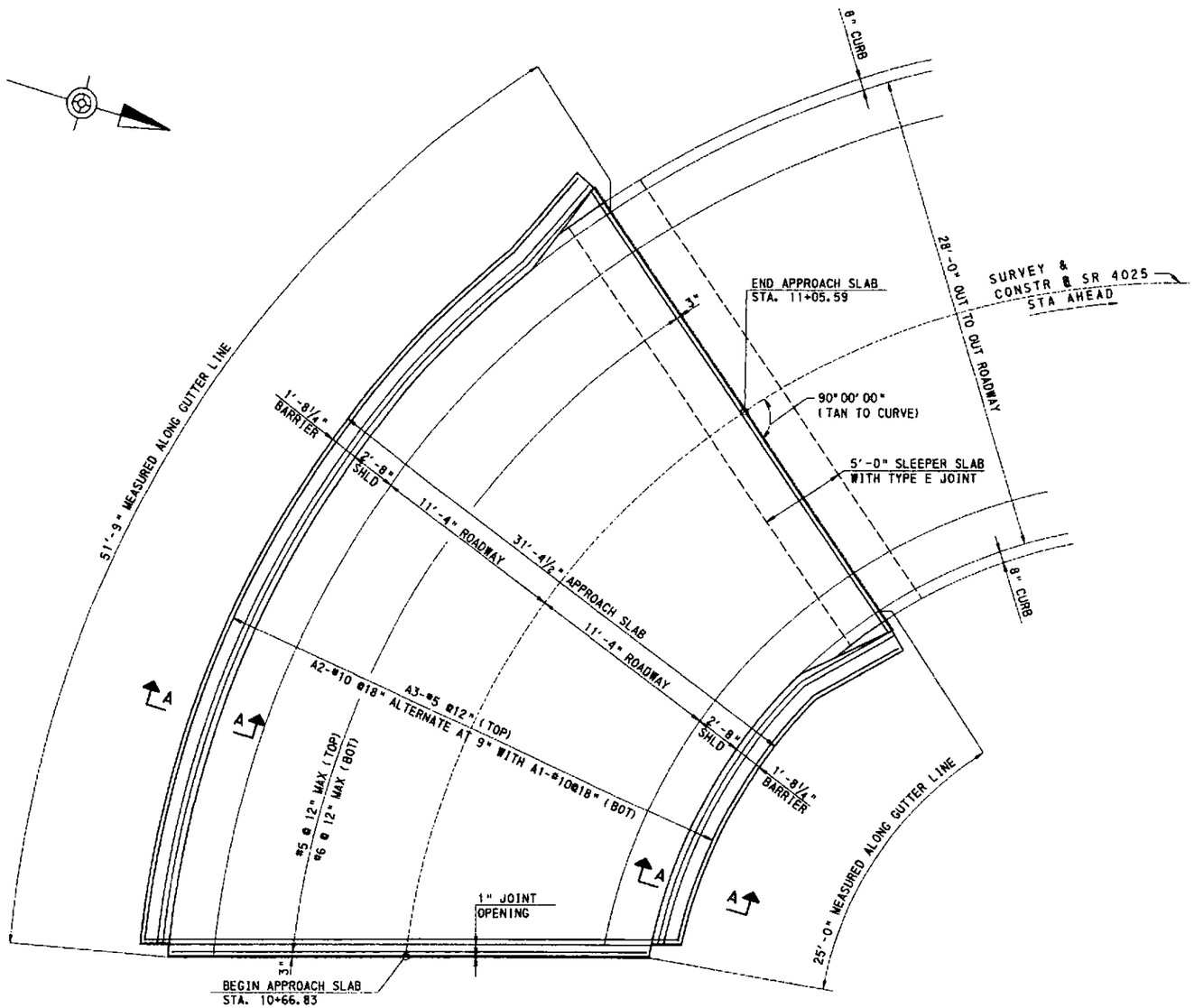

NOTE
SEE RC-23M FOR ADDITIONAL DETAILS

PLAN - BRIDGE APPROACH SLAB AT ABUTMENT 3

(ITEM NO 9000-0054)

4' 2' 0' 4'
SCALE

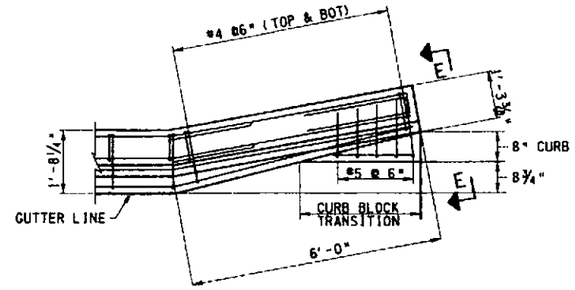

PLAN BARRIER TRANSITION

LEFT BARRIER SHOWN
RIGHT BARRIER SIMILAR

2' 1' 0' 2'
SCALE

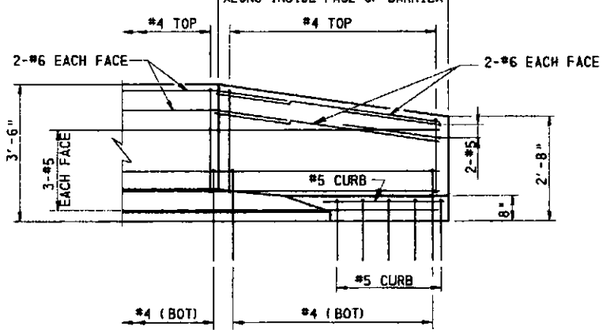

ELEVATION

2' 1' 0' 2'
SCALE

NOTES:

- FOR SECTIONS A-A, E-E AND ADDITIONAL NOTES SEE SHEET 14

A-00122496

SPECIAL DETAILS

DRAWN BY	RLG
CHECKED BY	KAM

COMMONWEALTH OF PENNSYLVANIA
PROFESSIONAL
MICHAEL J. MUTH
ENGINEER

N:\projects\0432\roadway\plan\rd5113.dgn 7/10/2007

DISTRICT	COUNTY	ROUTE	SECTION	SHEET
10-0	ARMSTRONG	1038	150	14 OF 45

EAST FRANKLIN TWP., WEST KITTANNING & APPLEWOLD BORO.'S

REVISION NUMBER	REVISIONS	DATE	BY

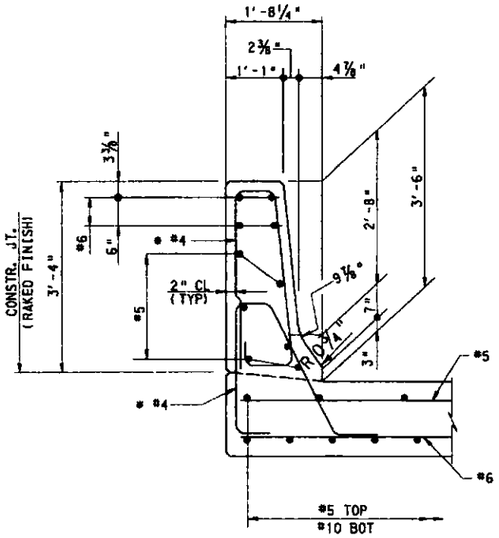

SECTION A-A

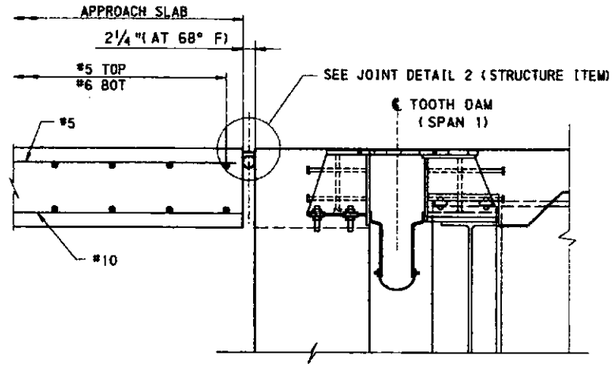

SECTION B-B

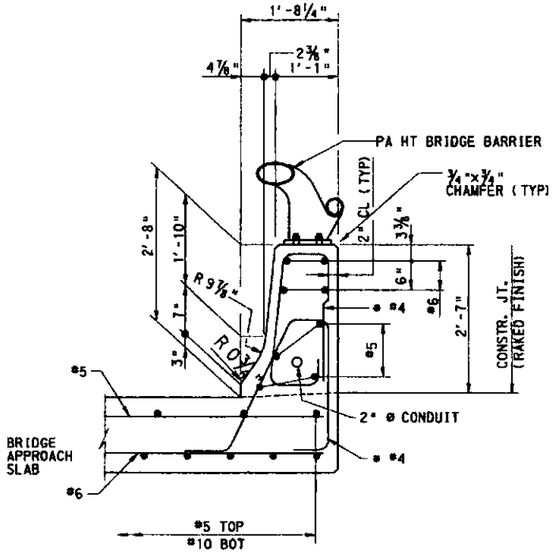

SECTION D-D

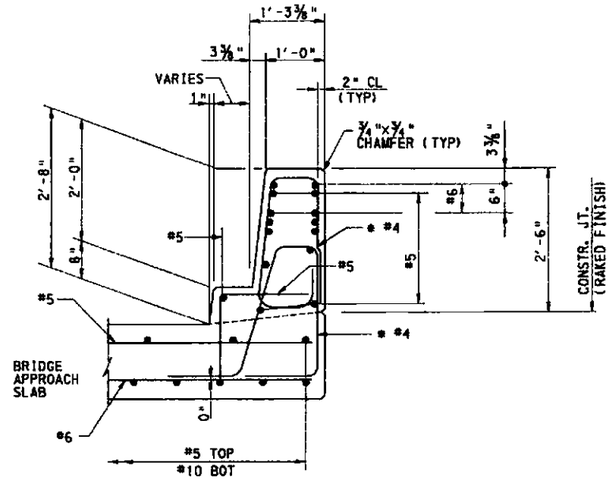

SECTION E-E

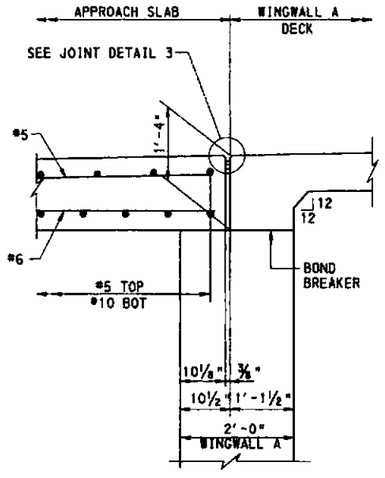

SECTION C-C

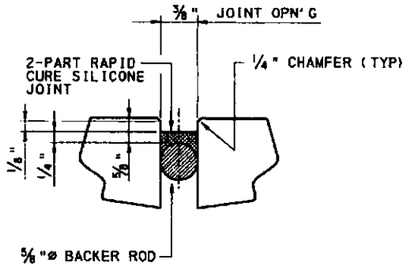

JOINT DETAIL 3
NO SCALE

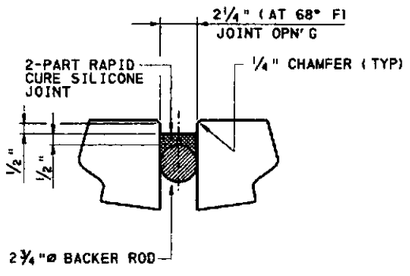

JOINT DETAIL 2
NO SCALE

LEGEND

* WITHIN 10'-0" OF EXPANSION JOINT AND AT END OF BARRIER SPACING IS REDUCED FROM 12" TO 6"

NOTES:

- ALL REINFORCEMENT BARS SHOWN ARE INCIDENTAL TO ITEM NO.
- ALL REINFORCEMENT BAR SPACINGS ARE MAXIMUM.
- ALL REINFORCEMENT SHALL BE EPOXY COATED.
- FOR GUIDE RAIL CONNECTION DETAILS SEE STANDARD DRAWING BC-739M
- FOR V-NOTCH AND CONSTRUCTION JOINT DETAILS SEE STANDARD DRAWING BC-752M.
- FOR ADDITIONAL APPROACH SLAB DETAILS NOT SHOWN SEE STANDARD DRAWING RC-23M.

SPECIAL DETAILS

2' 1' 0' 2'
SCALE

A-00122496

DRAWN BY	RLG
CHECKED BY	KAM

COMMONWEALTH OF PENNSYLVANIA
PROFESSIONAL
MICHAEL J. MUTH
ENGINEER

DISTRICT	COUNTY	ROUTE	SECTION	SHEET
10-0	ARMSTRONG	1038	150	15 OF 45
EAST FRANKLIN TWP., WEST KITTANNING & APPLEWOLD BORO.'S				

REVISION NUMBER	REVISIONS	DATE	BY

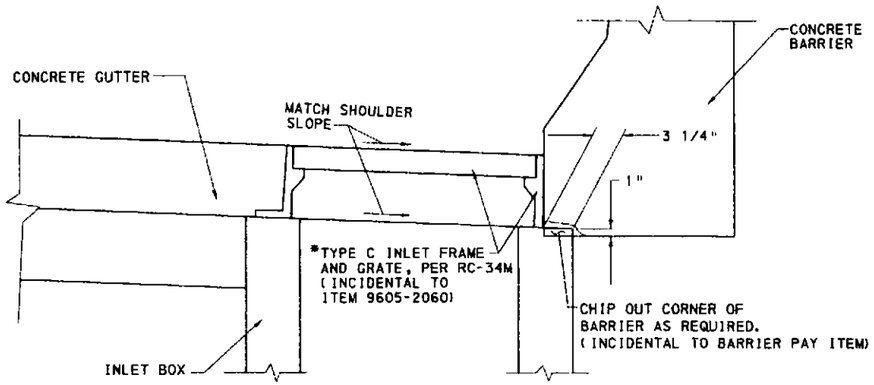

SECTION A-A

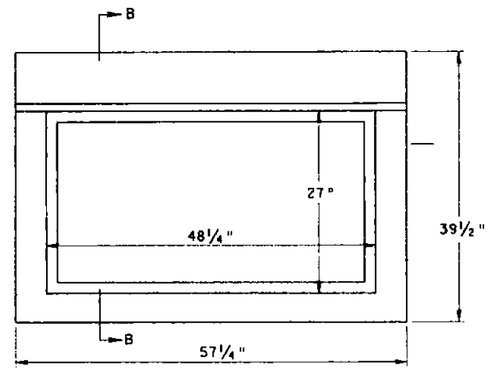

PLAN VIEW

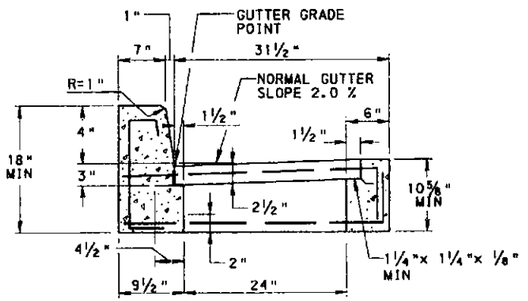

SECTION B-B

TYPE C INLET SPECIAL

(ITEM NO. 9605-2001)

INLET A-8: IN LOCATION OF 4" CURB REVEAL

NOTE: CONSTRUCT ITEM 9605-2001 WITH BICYCLE SAFE GRATE

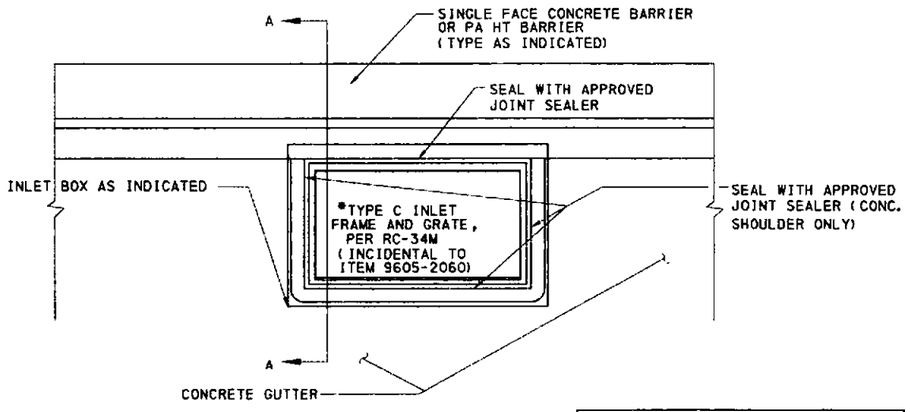

* CONSTRUCT WITH BICYCLE SAFE GRATE

PLAN

TYPE M INLET SPECIAL

(ITEM NO 9605-2060)
NO SCALE

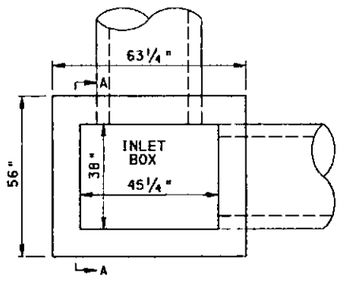

PLAN VIEW

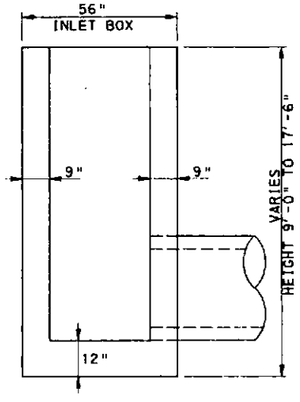

SECTION A-A

ITEM NO. 9605-2066

INLET ID	DEPTH/INLET BOX
A-1	17'-6"
A-16	10'- 2"
A-14	11'- 0"
A-13	9'- 8"
A-12	11'- 5"
A- 5	13'-11"

NOTE:

FOR INFORMATION NOT SHOWN SEE RC-34M, PROVIDE REINFORCEMENT IN ACCORDANCE WITH RC-34M, SHEET 9 OF 10 AND STEPS IN ACCORDANCE WITH RC-39M, SHEET 3 OF 6. ITEM INCLUDES INLET TOP UNIT.

TYPE M INLET, TYPE 1 BOX SPECIAL

(ITEM NO. 9605-2066)

A-00122496

SPECIAL DETAILS

DRAWN BY	CJC
CHECKED BY	MJM

COMMONWEALTH OF PENNSYLVANIA — PROFESSIONAL ENGINEER — MICHAEL J. MUTH

DISTRICT	COUNTY	ROUTE	SECTION	SHEET
10-0	ARMSTRONG	1038	150	16 OF 45
EAST FRANKLIN TWP., WEST KITTANNING & APPLEWOLD BORO.'S				

REVISION NUMBER	REVISIONS	DATE	BY

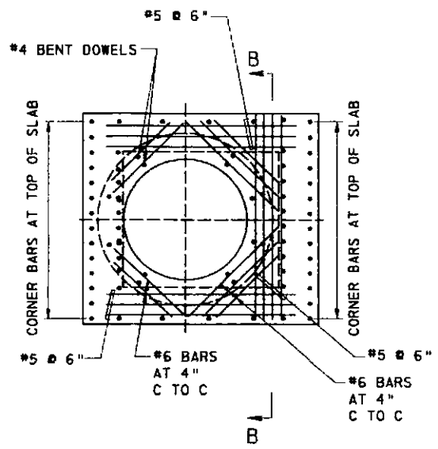

SECTION A-A

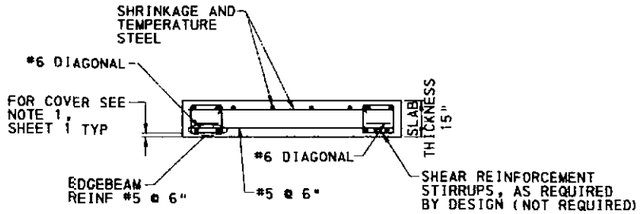

SECTION B-B

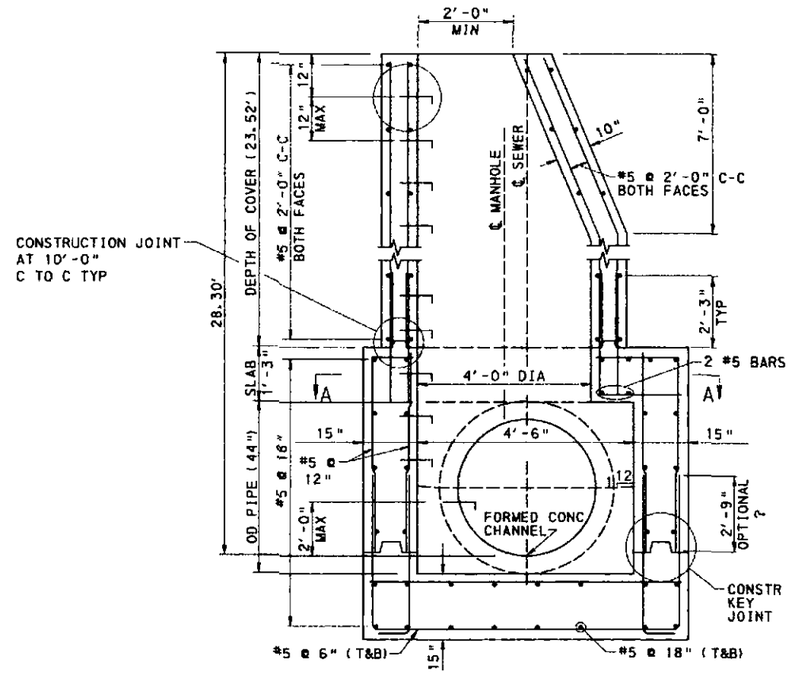

SECTION VIEW

MODIFIED MANHOLE

(ITEM NO 0605-1500)

NOTES:
1. FOR INFORMATION NOT SHOWN SEE RC-39M, SHEET 2.
2. SECTION A-A AS SHOWN ON RC-39M, SHEET 2 OF 6.
3. CONCRETE SHALL BE CLASS A.
4. STEEL SHALL BE GRADE 60.

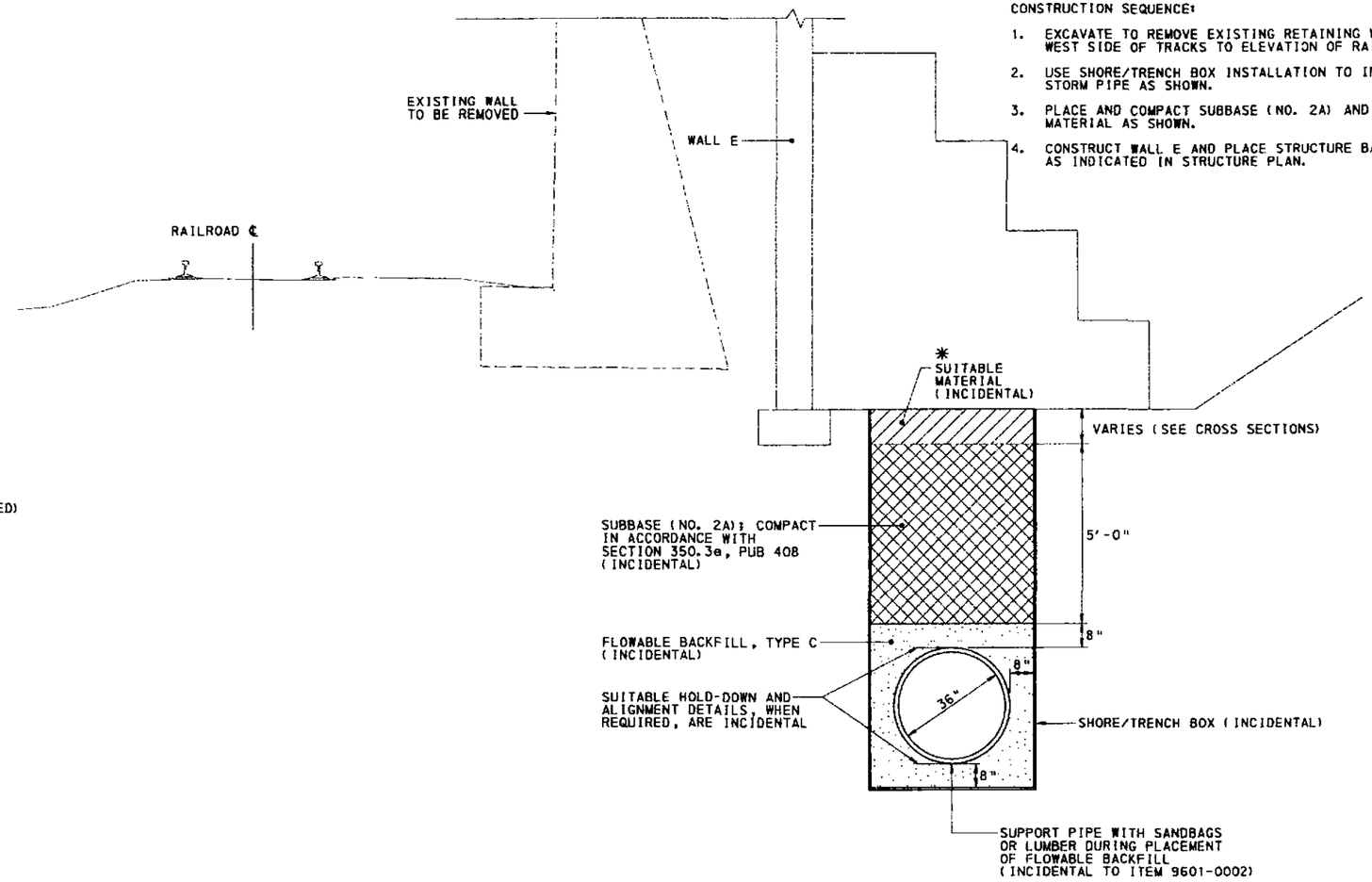

CONSTRUCTION SEQUENCE:

1. EXCAVATE TO REMOVE EXISTING RETAINING WALL ALONG WEST SIDE OF TRACKS TO ELEVATION OF RAILROAD BED.
2. USE SHORE/TRENCH BOX INSTALLATION TO INSTALL STORM PIPE AS SHOWN.
3. PLACE AND COMPACT SUBBASE (NO. 2A) AND SUITABLE MATERIAL AS SHOWN.
4. CONSTRUCT WALL E AND PLACE STRUCTURE BACKFILL AS INDICATED IN STRUCTURE PLAN.

NOTES:

1. PROVIDE MATERIALS AND WORKMANSHIP IN ACCORDANCE WITH THE REQUIREMENTS OF PUBLICATION 408, SECTION 601 AND 220.
2. FLOWABLE BACKFILL WILL ENVELOP THE LAST SECTION OF PIPE OR END SECTION. CONSTRUCT DIKE OF FLOWABLE BACKFILL MATERIAL AS SPECIFIED IN SPECIAL PROVISION OR PROVIDE FORMWORK TO CONTAIN FLOWABLE BACKFILL.
3. PAYMENT FOR THE BACKFILL ENVELOP (AGGREGATE, BEDDING AND BACKFILL OR FLOWABLE BACKFILL MATERIAL AND SUITABLE MATERIAL UP TO 300 (12") ABOVE THE PIPE IS INCIDENTAL TO THE PIPE.

* SUITABLE MATERIAL = MATERIAL CONTAINING NO DEBRIS, ORGANIC MATTER, FROZEN MATERIAL OR LARGE STONES WITH A DIAMETER GREATER THAN ONE-HALF THE THICKNESS OF THE COMPACTED LAYERS BEING PLACED.

36" REINFORCED CONCRETE PIPE ALONG WALL E

(ITEM NO. 9601-0002)

A-00122496

SPECIAL DETAILS

DRAWN BY	CJC
CHECKED BY	MJM

COMMONWEALTH OF PENNSYLVANIA PROFESSIONAL ENGINEER MICHAEL J. MUTH

f:\projects\0132\roadway\plan\cnd1E09.dgn 7/17/2007

DISTRICT	COUNTY	ROUTE	SECTION	SHEET
10-0	ARMSTRONG	1038	150	17 OF 45
EAST FRANKLIN TWP., WEST KITTANNING & APPLEWOLD BORO.'S				

REVISION NUMBER	REVISIONS	DATE	BY

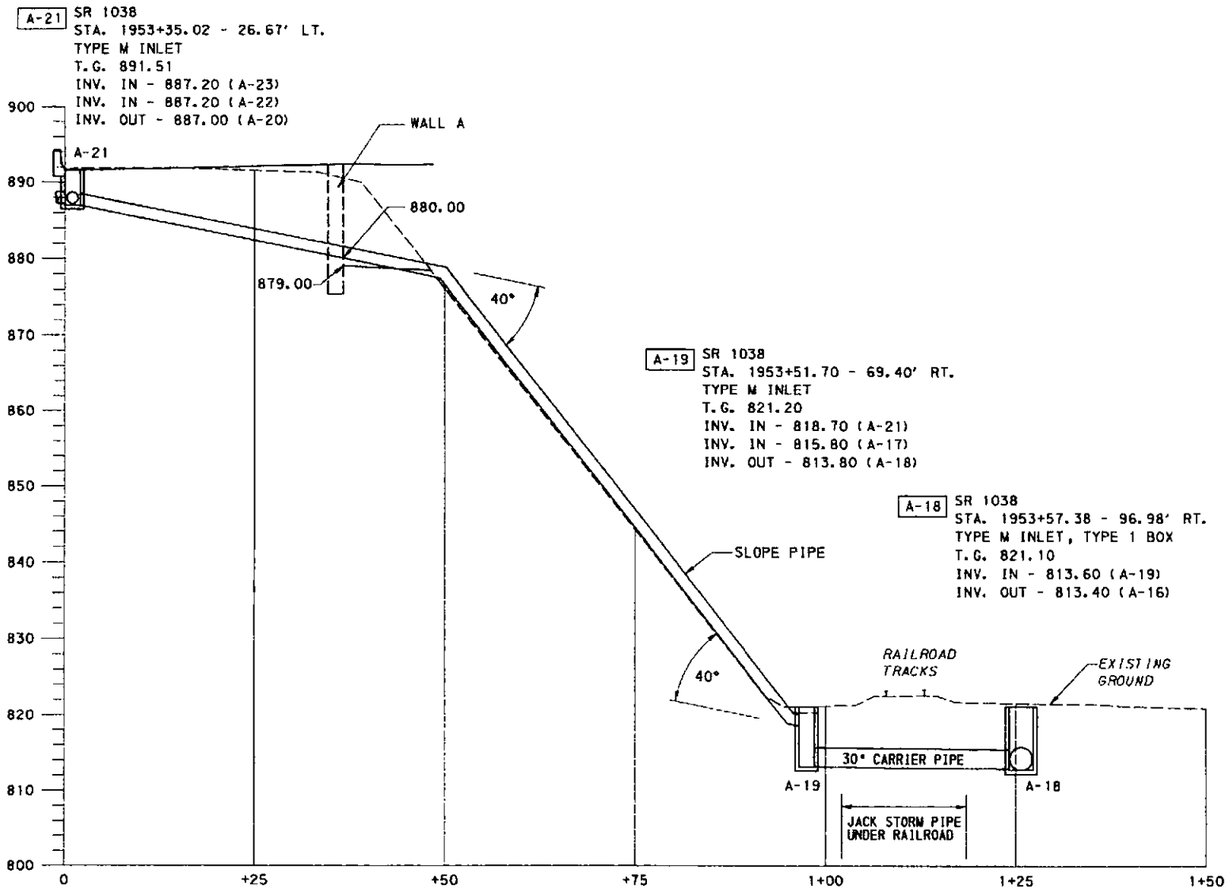

PROFILE

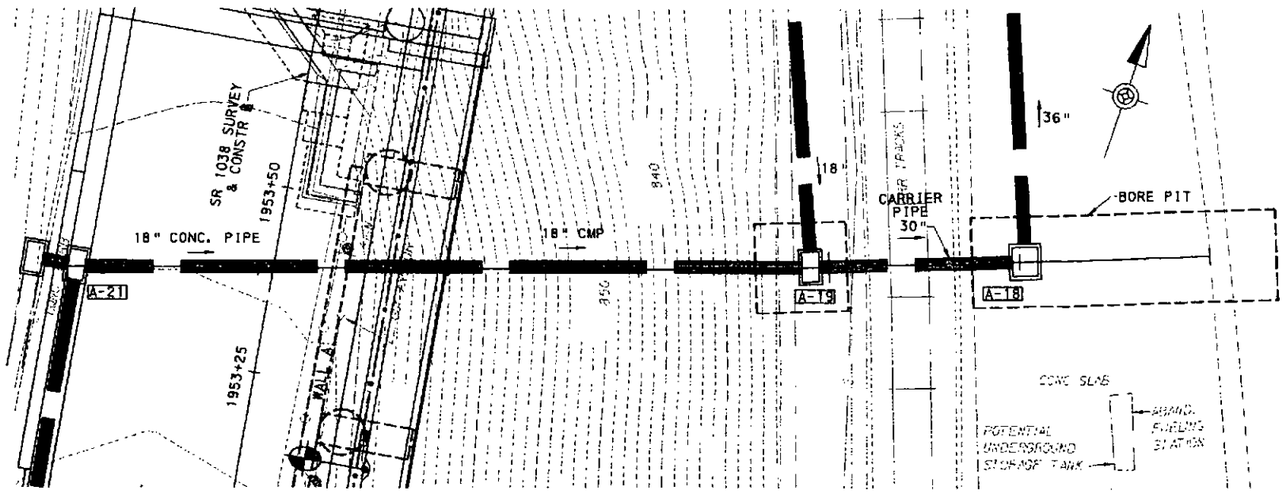

PLAN

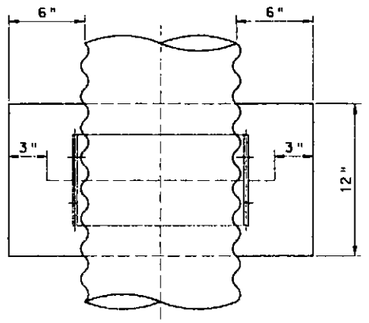

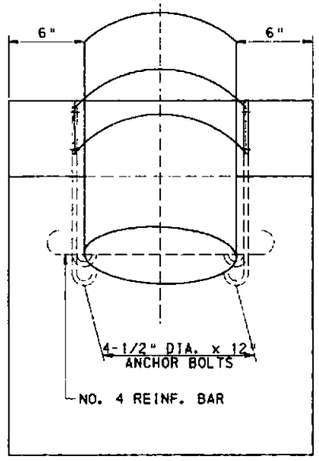

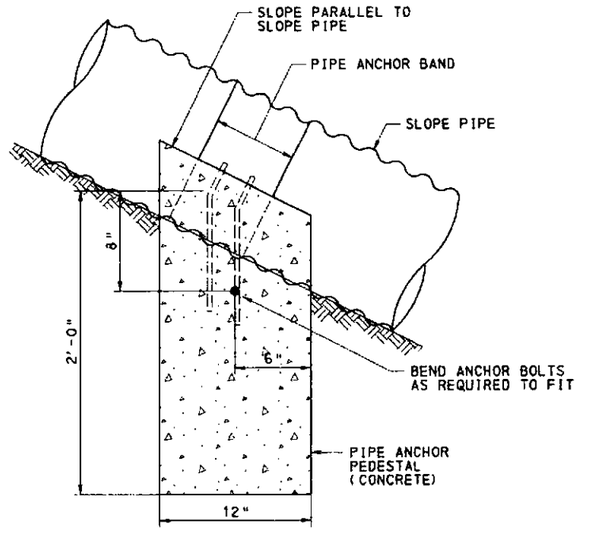

SLOPE PIPE ANCHOR

FOR ABOVE GROUND INSTALLATION

(ITEM NO. 9601-0001)

NO SCALE

NOTE: PLACE ONE PIPE ANCHOR FOR ABOVE GROUND INSTALLATION AT EACH PIPE JOINT OR AS DIRECTED BY THE REPRESENTATIVE WHEN INSTALLING PIPES ON THE SURFACE OF SLOPES.

DRAWN BY	MJM
CHECKED BY	SGM

SCALE
10 FEET 0 10 FEET

A-00122496

SPECIAL DETAILS
SLOPE PIPE/JACK AND BORE PIPE

COMMONWEALTH OF PENNSYLVANIA
REGISTERED PROFESSIONAL
MICHAEL J. MUTH
ENGINEER

DISTRICT	COUNTY	ROUTE	SECTION	SHEET
10-0	ARMSTRONG	1038	150	18 OF 45
EAST FRANKLIN TWP., WEST KITTANNING & APPLEWOLD BORO.'S				

REVISION NUMBER	REVISIONS	DATE	BY

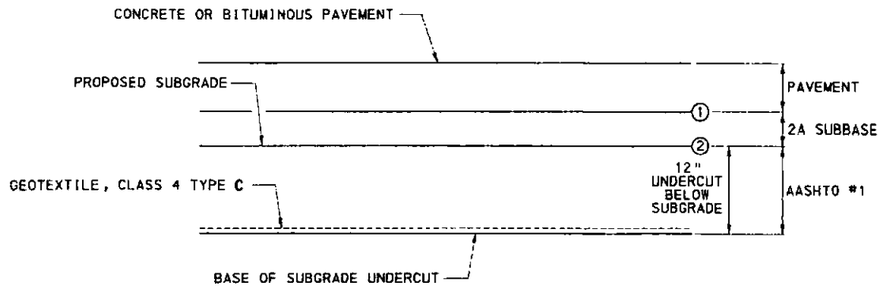

TYPE 1 SUBGRADE UNDERCUT DETAIL

COMPACTION AT POINTS ① ②
NTS

1. A MINIMUM OF 8" AASHTO NO. 1 COARSE AGGREGATE MUST BE IN PLACE OVER THE GEOTEXTILE BEFORE EQUIPMENT IS PERMITTED TO PASS OVER IT.
2. REFERENCE POINT FOR UNDERCUTTING IS SUBGRADE ELEVATION. APPLY UNDERCUTTING TREATMENT AT LOCATIONS DIRECTED BY THE ENGINEER. PLACE TYPE C CLASS 4 GEOTEXTILE ACCORDINGLY OR AS DIRECTED BY THE ENGINEER.
3. UNDERDRAIN AND OUTLET PIPE TO BE INSTALLED AS DIRECTED BY THE ENGINEER.

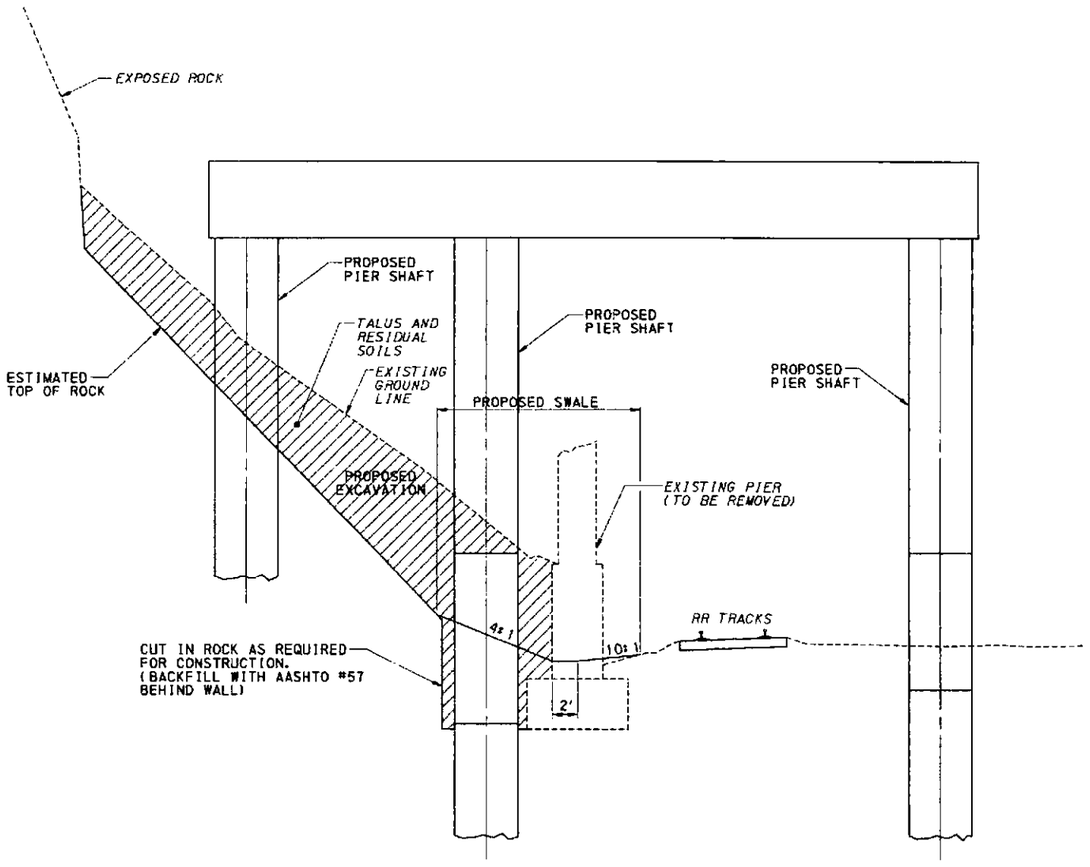

EXCAVATION AT PIER 2

NTS

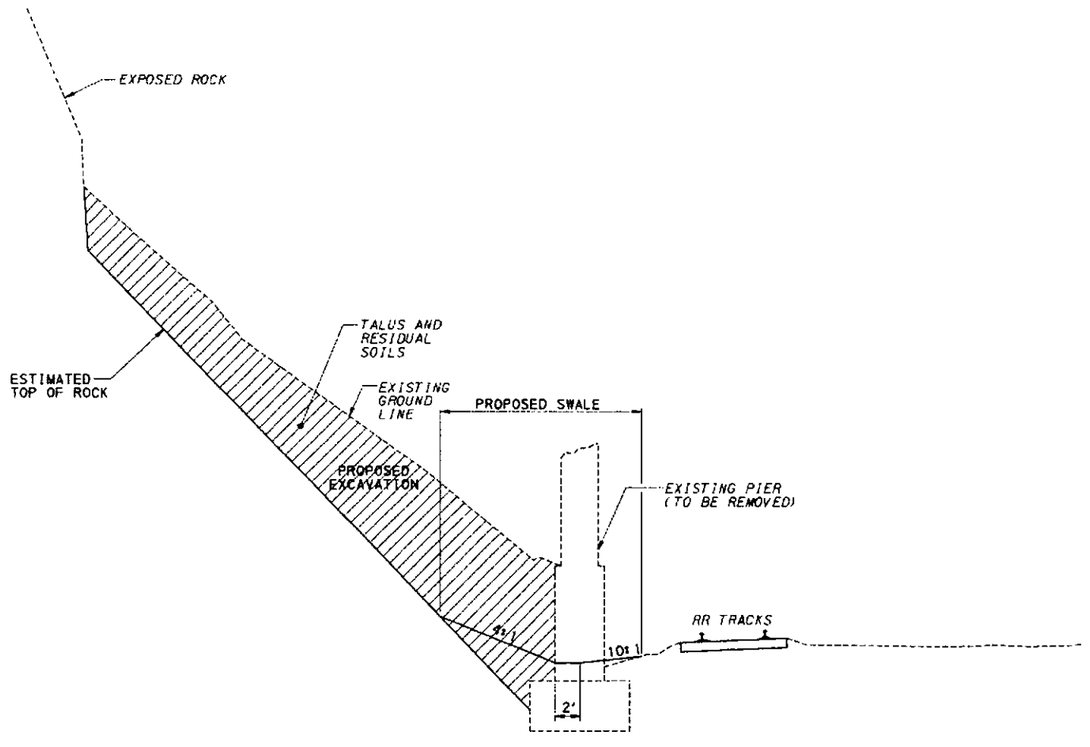

EXCAVATION ADJACENT TO PIER 2

NTS

DRAWN BY	RAF
CHECKED BY	JES

A-00122496

SPECIAL DETAILS

COMMONWEALTH OF PENNSYLVANIA
REGISTERED PROFESSIONAL
ROGER A. FAIRBANK
GEOLOGIST
No. PG-000751-G

hl\projects\0432\Roadway\Plan\cndet10.dgn 7/6/2001

DISTRICT	COUNTY	ROUTE	SECTION	SHEET
10-0	ARMSTRONG	1038	150	19 OF 45

EAST FRANKLIN TWP., WEST KITTANNING & APPLEWOLD BORO.'S

REVISION NUMBER	REVISIONS	DATE	BY

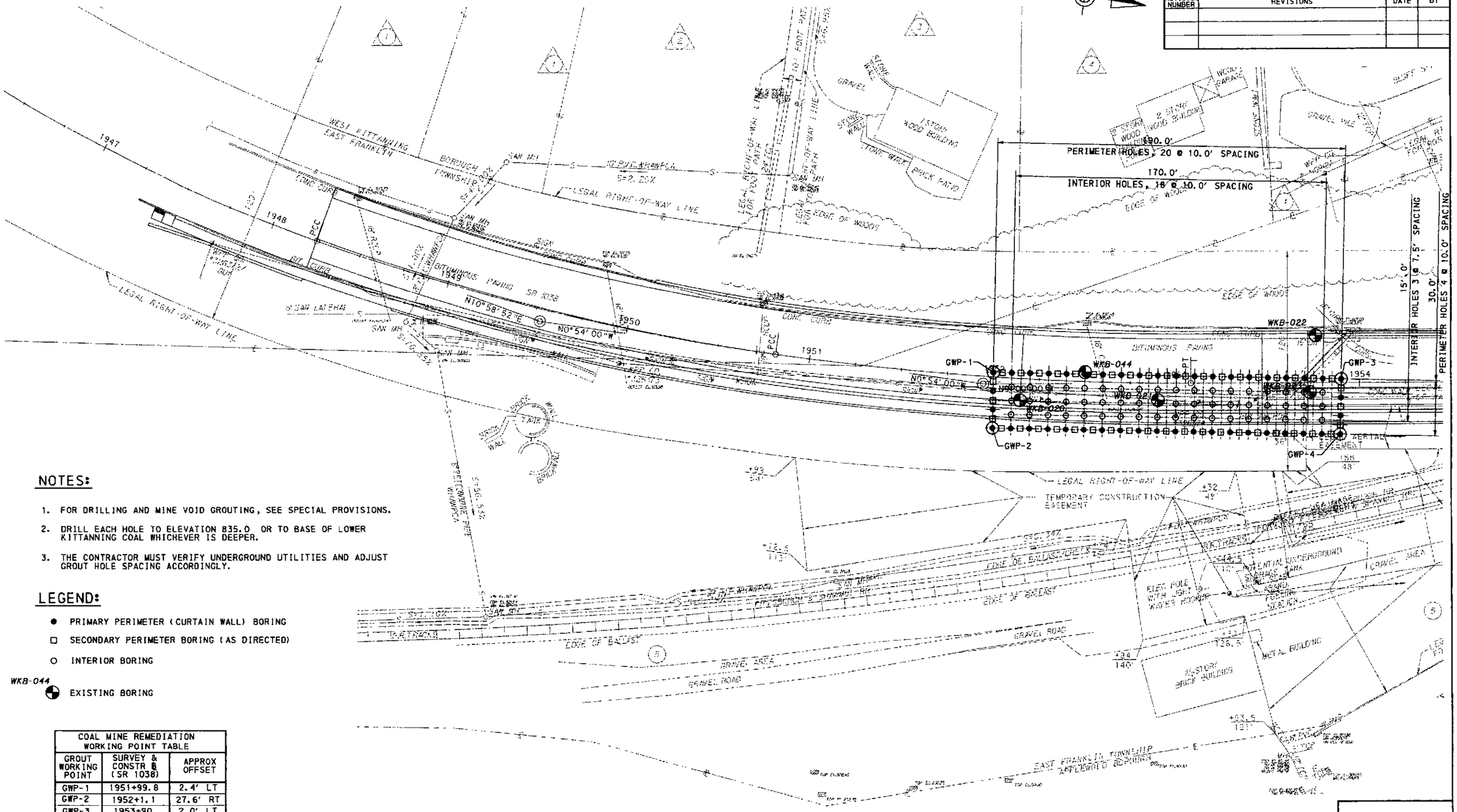
WEST KITTANNING
EAST FRANKLIN
BOROUGH OF
TOWNSHIP OF
1947
1948
1949
1950
1951
1952
1953
1954
PCC
PCP
PT
SAN MH
10" PVC SANITARY SEWER
S=2.20%
LEGAL RIGHT-OF-WAY LINE
LEGAL RIGHT OF WAY LINE FOR TOW PATH
LEGAL RIGHT OF WAY LINE FOR TOW PATH
EDGE OF WOODS
STONE WALL
GRAVEL
1 STORY WOOD BUILDING
2 STORY WOOD BUILDING
WOOD GARAGE
STONE WALL
STONE WALL
BRICK PATIO
BLUFF ST.
GRAVEL MILL
STONE WALL
170.0'
PERIMETER HOLES, 20 @ 10.0' SPACING
170.0'
INTERIOR HOLES, 18 @ 10.0' SPACING
EDGE OF WOODS
EDGE OF WOODS
15'-0"
INTERIOR HOLES 3 @ 7.5' SPACING
30.0'
PERIMETER HOLES 4 @ 10.0' SPACING
WKB-022
WKB-044
WKB-021
WKB-020
GWP-1
GWP-2
GWP-3
GWP-4
BITUMINOUS PAVING SR 1038
N10°58'52"E
N0°54'00"W
N0°54'00"W
6" SAN LATERAL
SAN MH
STONE WALL
STONE WALL
STONE WALL

DISTRICT	COUNTY	ROUTE	SECTION	SHEET
10-0	ARMSTRONG	1038	150	20 OF 45

EAST FRANKLIN TWP., WEST KITTANNING & APPLEWOLD BORO.'S

REVISION NUMBER	REVISIONS	DATE	BY

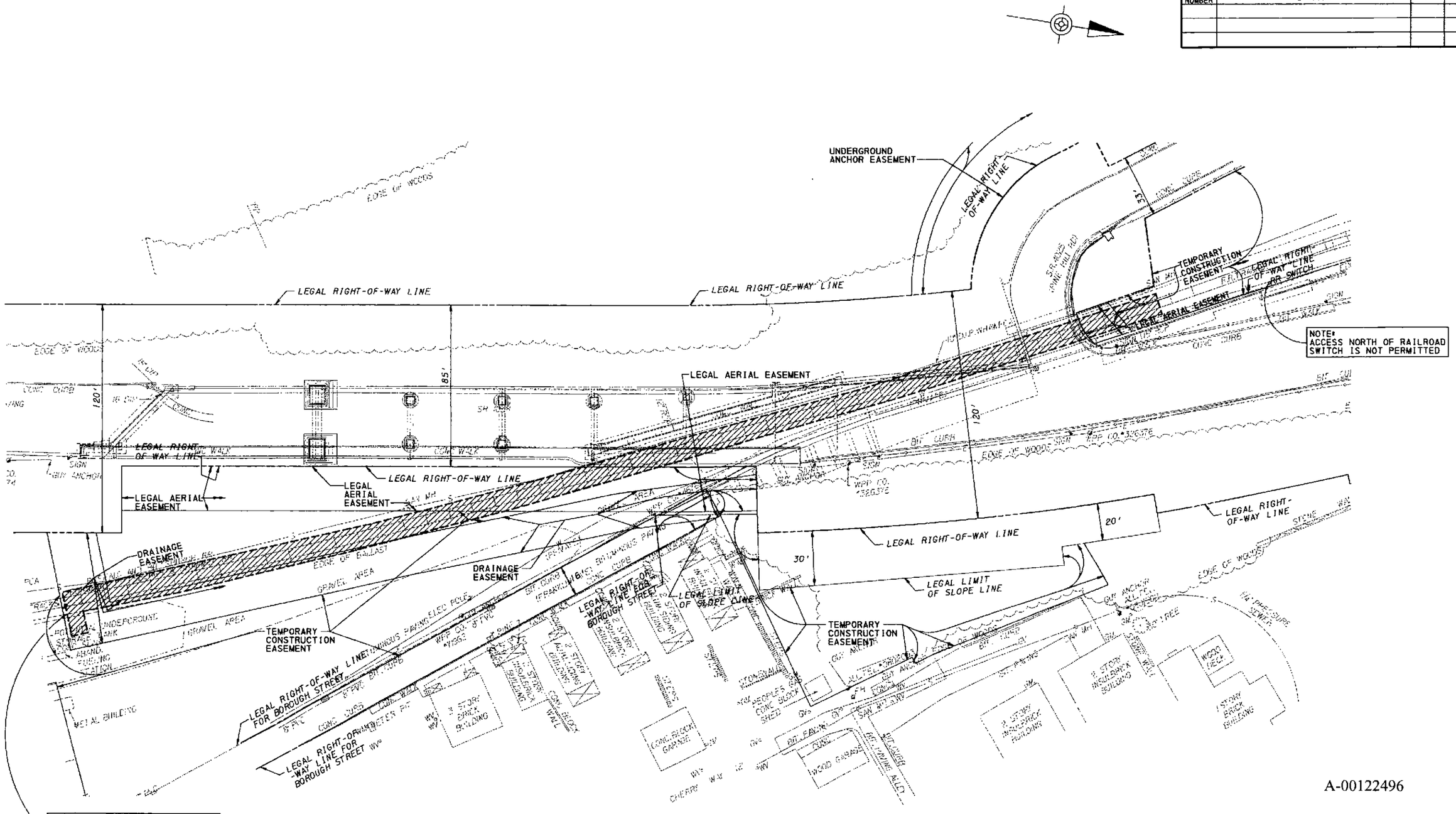

A-00122496

SPECIAL DETAIL
TEMPORARY RAILROAD CROSSING

(ITEM NO. 9000-0002)

SCALE
25 FEET 0 25 FEET

APPROXIMATE AREA OF RAILROAD CROSSING CONSTRUCTION

DRAWN BY	
CHECKED BY	

COMMONWEALTH OF PENNSYLVANIA
REGISTERED PROFESSIONAL
MICHAEL J. MUTH
ENGINEER

hl\projects\0432\Roadway\Plan\Cndet15.dgn 7/10/2007

...UL PLAN
...G AND PAVEMENT MARKING PLAN
...WAY LIGHTING PLAN
E SPECIAL PROVISIONS

SUMMARY

S-27038 = STR-A
S-27372 = STR-B
S-27373 = STR-C
S-27374 = STR-D

REVISION NO.	REVISIONS	DATE	BY	DISTRICT	COUNTY	ROUTE	SECTION	SHEET
				10-0	ARMSTRONG	1038	150	21 OF 45
				E FRANKLIN TWP, APPLEWOLD AND W. KITTANNING BOROS				

QUANTITY	ITEM NO / UNIT	DESCRIPTION	DESIGN NO	FOR TAB SEE SHEET
X	0201 0001 LS	CLEARING AND GRUBBING		25
11902	0203 0001 CY	CLASS 1 EXCAVATION		24, 27-28, 32-35
132	0203 0004 CY	CLASS 1B EXCAVATION		24, TCP
86	0204 0001 CY	CLASS 2 EXCAVATION		32-35
4852	0204 0150 CY	CLASS 4 EXCAVATION		27-28, TCP
1621	0212 0001 LF	GEOTEXTILE, CLASS 1		27-28, 31
76	0212 0002 SY	GEOTEXTILE, CLASS 2, TYPE A		32-35
262	0212 0014 SY	GEOTEXTILE, CLASS 4, TYPE A		32-35
632	0212 0016 SY	GEOTEXTILE, CLASS 4, TYPE C		24
—	0213 0001 PDA	TEMPORARY PROJECT AIR POLLUTION CONTROL		NO TAB
85	0305 0200 TON	BITUMINOUS CONCRETE BASE COURSE		TCP
1535	0309 0526 SY	SUPERPAVE ASPHALT MIXTURE DESIGN, HMA BASE COURSE, PG 64-22, 3 TO < 10 MILLION ESALS, 25.0 MM MIX, 6" DEPTH		24
4218	0350 0104 SY	SUBBASE 4" DEPTH (NO 2A)		24
1894	0350 0110 SY	SUBBASE 10" DEPTH (NO 2A)		24
44	0350 0120 CY	SUBBASE (NO. 2A)		TCP
4045	0360 0001 SY	ASPHALT TREATED PERMEABLE BASE COURSE, 4" DEPTH		24
232	0409 0385 SY	SUPERPAVE ASPHALT MIXTURE DESIGN, HMA WEARING COURSE, PG 64-22, < 0 3 MILLION ESALS, 9.5 MM MIX, 1 1/2" DEPTH, SRL-L		TCP
1640	0409 0582 SY	SUPERPAVE ASPHALT MIXTURE DESIGN, HMA WEARING COURSE, PG 64-22, 3 TO < 10 MILLION ESALS, 9.5 MM MIX, 1 1/2" DEPTH, SRL-H		24
1640	0409 6550 SY	SUPERPAVE ASPHALT MIXTURE DESIGN, HMA BINDER COURSE, PG 64-22, 3 TO < 10 MILLION ESALS, 19 0 MM MIX, 2 1/2" DEPTH		24
188	0421 0202 SY	BITUMINOUS BINDER COURSE, ID-2, 2" DEPTH		TCP
44	0421 0505 TON	BITUMINOUS BINDER COURSE, ID-2, LEVELING COURSE		TCP
3270	0460 0001 SY	BITUMINOUS TACK COAT		24, TCP
366	0491 0070 SY	MILLING OF BITUMINOUS PAVEMENT SURFACE, VARIABLE DEPTH		TCP
68	0501 0020 SY	PLAIN CEMENT CONCRETE PAVEMENT, 4" DEPTH		24
3501	0501 0030 SY	PLAIN CEMENT CONCRETE PAVEMENT, 9" DEPTH		24
75	0601 0435 LF	24" THERMOPLASTIC PIPE, GROUP II, 12'-1.5' FILL, SHORE/TRENCH BOX		TCP
13	0601 0451 LF	12" THERMOPLASTIC PIPE, GROUP III, 8'-2' FILL, SHORE/TRENCH BOX		27-28
117	0601 0452 LF	15" THERMOPLASTIC PIPE, GROUP III, 8'-2' FILL, SHORE/TRENCH BOX		27-28
138	0601 0453 LF	18" THERMOPLASTIC PIPE, GROUP III, 8'-2' FILL, SHORE/TRENCH BOX		27-28
528	0601 0459 LF	36" THERMOPLASTIC PIPE, GROUP III, 8'-2' FILL, SHORE/TRENCH BOX		27-28
4	0601 4367 LF	30" CORRUGATED ALUMINIZED STEEL PIPE, TYPE I, (2 2/3" X 1/2" CORRUGATIONS), 16 GAGE, SHORE/TRENCH BOX		27-28
107	0601 5901 LF	CLEANING EXISTING PIPE CULVERTS, DIAMETERS UP TO AND INCLUDING 36"		27-28
29	0601 7005 LF	12" REINFORCED CONCRETE PIPE, TYPE A, 30' - 1.5' FILL		27-28
108	0601 7014 LF	18" REINFORCED CONCRETE PIPE, TYPE A, 15' - 2' FILL		27-28
7	0601 7505 LF	12" REINFORCED CONCRETE PIPE, TYPE A, 15' - 2' FILL, SHORE/TRENCH BOX		27-28
16	0601 7509 LF	18" REINFORCED CONCRETE PIPE, TYPE A, 7' - 3' FILL, SHORE/TRENCH BOX		27-28
105	0601 7511 LF	18" REINFORCED CONCRETE PIPE, TYPE A, 15' - 3' FILL, SHORE/TRENCH BOX		27-28
8	0601 7526 LF	30" REINFORCED CONCRETE PIPE, TYPE A, 7' - 3' FILL, SHORE/TRENCH BOX		27-28
240	0601 7538 LF	36" REINFORCED CONCRETE PIPE, TYPE A, 15' - 3' FILL, SHORE/TRENCH BOX		27-28
74	0601 9363 LF	18" CORRUGATED ALUMINIZED STEEL PIPE, TYPE I, (2 2/3" X 1/2" CORRUGATIONS), 16 GAGE		27-28
752	0604 7509 LF	18" REINFORCED CONCRETE PIPE, TYPE A (OPEN JOINT), 7' - 3' FILL, SHORE/TRENCH BOX		27-28
1	0605 1500 EACH	MODIFIED MANHOLE		29-30
6	0605 2010 EACH	TYPE C INLET, BICYCLE SAFE GRATE		29-30
9	0605 2060 EACH	TYPE M INLET		29-30
1	0605 2066 EACH	TYPE M INLET, TYPE 1 BOX		29-30
1	0605 2620 EACH	TYPE D-W ENDWALL		29-30
X	0608 0001 LS	MOBILIZATION		NO TAB
X	0609 0003 LS	INSPECTOR'S FIELD OFFICE AND INSPECTION FACILITIES, TYPE B		NO TAB
X	0609 0009 LS	EQUIPMENT PACKAGE ◆		NO TAB
976	0610 7000 LF	PAVEMENT BASE DRAIN		31
22	0612 0001 LF	SUBGRADE DRAINS		31
3	0620 0010 EACH	TYPICAL AND ALTERNATE CONCRETE BRIDGE BARRIER TRANSITION WITHOUT INLET PLACEMENT		26
1	0620 0400 EACH	TERMINAL SECTION, SINGLE		26
1300	0620 0502 LF	REMOVE EXISTING GUIDE RAIL (DEPARTMENT PROPERTY)		26
1	0620 0862 EACH	TYPE 2-S POST ANCHORAGE		26
275	0620 1075 LF	TYPE 2-S GUIDE RAIL		26
188	0620 1100 LF	TYPE 2-SC GUIDE RAIL		26
1	0620 1250 EACH	TYPE 2 STRONG POST END TREATMENT		26
87	0622 0003 LF	SINGLE FACE CONCRETE GLARE SCREEN		26
473	0623 0051 LF	SINGLE FACE CONCRETE BARRIER, 41" HEIGHT		26
1	4623 0121 EACH	END TRANSITION, SINGLE FACE CONCRETE BARRIER, 41" HEIGHT MODIFIED ◆		26
8	0626 0001 CY	GABIONS, TYPE A		32-35
296	0630 0001 LF	PLAIN CEMENT CONCRETE CURB		24
126	0633 0200 LF	PLAIN CONCRETE MOUNTABLE CURB, TYPE A		24
191	0641 0005 SY	PLAIN CEMENT CONCRETE CURB GUTTER		24
121	4641 0005 SY	PLAIN CEMENT CONCRETE CURB GUTTER MODIFIED ◆		24
373	0676 0001 SY	CEMENT CONCRETE SIDEWALK		24
X	0686 0020 LS	CONSTRUCTION SURVEYING, TYPE B		NO TAB
X	0686 0050 LS	CONSTRUCTION SURVEYING, TYPE D		NO TAB
265	0703 0020 CY	NO. 1 COARSE AGGREGATE		24, 32-35
556	0703 0025 CY	NO. 57 COARSE AGGREGATE		27-28, TCP
24	0802 0001 CY	TOPSOIL FURNISHED AND PLACED		32-35
6	0804 0011 LB	SEEDING AND SOIL SUPPLEMENTS - FORMULA B		32-35
86	0804 0013 LB	SEEDING AND SOIL SUPPLEMENTS - FORMULA D		32-35
42	0804 0014 LB	SEEDING - FORMULA E		32-35
85	0804 0020 LB	SEEDING AND SOIL SUPPLEMENTS - FORMULA L		32-35
6	0805 0022 TON	MULCHING - STRAW		32-35
1756	0805 0030 SY	MULCHING - BONDED FIBER MATRIX		32-35
310	0806 0055 SY	TURF REINFORCEMENT MAT		32-35
30	4810 0052 EACH	SELECTIVE TREE REMOVAL MODIFIED ◆		25
—	0845 0002 PDA	UNFORESEEN WATER POLLUTION CONTROL		NO TAB
18	0850 0033 CY	ROCK, CLASS R-5		32-35
931	0865 0001 LF	SILT BARRIER FENCE, 18" HEIGHT		32-35
X	0901 0001 LS	MAINTENANCE AND PROTECTION OF TRAFFIC DURING CONSTRUCTION ◆		NO TAB
6	0901 0205 EACH	CHANGEABLE MESSAGE SIGN		TCP
45	0901 0231 DAY	ADDITIONAL WARNING LIGHTS, TYPE B		TCP
45	0901 0232 DAY	ADDITIONAL WARNING LIGHTS, TYPE C		TCP
500	0901 0240 SF	ADDITIONAL TRAFFIC CONTROL SIGNS		TCP
1970	0901 0320 LF	4" STANDARD PAVEMENT MARKINGS, PAINT & BEADS, YELLOW		TCP
2365	0901 0330 LF	4" STANDARD PAVEMENT MARKINGS, PAINT & BEADS, WHITE		TCP
48	0901 0334 LF	24" STANDARD PAVEMENT MARKINGS, PAINT & BEADS, WHITE		TCP
3	0910 0001 EACH	JUNCTION BOXES J.B -1		HLP
1	0910 0002 EACH	JUNCTION BOXES J.B -2		HLP

COMMONWEALTH OF PENNSYLVANIA
REGISTERED PROFESSIONAL
MICHAEL J. MUTH
ENGINEER
PE046915E

A-00122496

I:\Jobs\0432\Highway\Tabs\ SUMMAR.mdb 7/11/2007 12:19:50 PM

TRAFFIC CONTROL PLAN
P - SIGNING AND PAVEMENT MARKING PLAN
IGHWAY LIGHTING PLAN
E SPECIAL PROVISIONS

SUMMARY

S-27038 = STR-A
S-27372 = STR-B
S-27373 = STR-C
S-27374 = STR-D

REVISION NO.	REVISIONS	DATE	BY	DISTRICT	COUNTY	ROUTE	SECTION	SHEET
				10-0	ARMSTRONG	1038	150	22 OF 45
				E FRANKLIN TWP, APPLEWOLD AND W. KITTANNING BOROS				

QUANTITY	ITEM NO / UNIT	DESCRIPTION	DESIGN NO	FOR TAB SEE SHEET
5	0910 0006 EACH	JUNCTION BOXES J.B -25		26
2	0910 0154 EACH	POLE FOUNDATION, TYPE FC		HLP
8	0910 1082 EACH	ALUMINUM LIGHTING POLE WITH 6-FOOT BRACKET ARM (35-FOOT MOUNTING HEIGHT) TYPE A		HLP
2	0910 1086 EACH	ALUMINUM LIGHTING POLE WITH 10-FOOT BRACKET ARM (35-FOOT MOUNTING HEIGHT) TYPE A		HLP
2	0910 1088 EACH	ALUMINUM LIGHTING POLE WITH 12-FOOT BRACKET ARM (35-FOOT MOUNTING HEIGHT) TYPE A		HLP
1	0910 1090 EACH	ALUMINUM LIGHTING POLE WITH 15-FOOT BRACKET ARM (35-FOOT MOUNTING HEIGHT) TYPE A		HLP
13	0910 2828 EACH	250-WATT HIGH PRESSURE SODIUM LUMINAIRE, ARM MOUNT		HLP
6295	0910 4114 LF	AWG 4 UNDERGROUND CABLE, COPPER, 1 CONDUCTOR		HLP
754	0910 5055 LF	2" DIRECT BURIAL CONDUIT		HLP
12	0910 5252 LF	1-1/4" CONDUIT IN STRUCTURE		26
575	0910 5255 LF	2" CONDUIT IN STRUCTURE		26
1	0910 5500 EACH	BURIED CABLE AND CONDUIT MARKER		HLP
740	0910 6000 LF	TRENCH		HLP
1	4910 7020 EACH	COMPLETE POWER SUPPLY SYSTEM SPECIAL ◆		HLP
X	0910 7210 LS	TESTING OF ENTIRE LIGHTING SYSTEM		HLP
152	0931 0001 SF	POST MOUNTED SIGNS, TYPE B		S & PMP
8	0932 0001 SF	POST MOUNTED SIGNS, TYPE C		S & PMP
63	0933 0001 SF	POST MOUNTED SIGNS, TYPE D		S & PMP
70	0935 0001 SF	POST MOUNTED SIGNS, TYPE F		S & PMP
16	0937 0106 EACH	GUIDE RAIL MOUNTED DELINEATOR TYPE B, (W/B)		S & PMP
16	0937 0113 EACH	GUIDE RAIL MOUNTED DELINEATOR TYPE D, (W/B)		S & PMP
10	0937 0202 EACH	BARRIER MOUNTED DELINEATOR, SIDE-MOUNT TYPE O, (Y/B)		S & PMP
9	0937 0203 EACH	BARRIER MOUNTED DELINEATOR, SIDE-MOUNT TYPE O, (W/B)		S & PMP
10	0937 0204 EACH	BARRIER MOUNTED DELINEATOR, TOP-MOUNT TYPE P, (Y/B)		S & PMP
9	0937 0205 EACH	BARRIER MOUNTED DELINEATOR, TOP-MOUNT TYPE P, (W/B)		S & PMP
2	0937 0310 EACH	FLEXIBLE DELINEATOR POST, SURFACE-MOUNT TYPE SM-2, WHITE POST WITH WHITE/BLANK SHEETING		S & PMP
4	0937 0313 EACH	FLEXIBLE DELINEATOR POST, SURFACE-MOUNT TYPE SM-2, YELLOW POST WITH YELLOW/BLANK SHEETING		S & PMP
16	0937 0333 EACH	FLEXIBLE DELINEATOR POST, GROUND-MOUNT TYPE GM-2, YELLOW POST WITH YELLOW/BLANK SHEETING		S & PMP
2926	0963 0001 SF	PAVEMENT MARKING REMOVAL		TCP
5720	0964 0001 LF	4" WHITE EPOXY PAVEMENT MARKINGS		S & PMP
5202	0964 0002 LF	4" YELLOW EPOXY PAVEMENT MARKINGS		S & PMP
427	0964 0005 LF	6" WHITE EPOXY PAVEMENT MARKINGS		S & PMP
204	0964 0021 LF	24" WHITE EPOXY PAVEMENT MARKINGS		S & PMP
3	0964 0101 EACH	WHITE EPOXY LEGEND, "ONLY", 8' - 0"		S & PMP
3	0964 0224 EACH	WHITE EPOXY LEGEND, "LEFT ARROW", 12 - 0" X 3' - 0"		S & PMP
2	0964 0226 EACH	WHITE EPOXY LEGEND, "THRU AND RIGHT ARROW", 20' - 0" X 3' - 7"		S & PMP
X	5018 0001 LS	REMOVAL OF EXISTING BRIDGE MODIFIED ◆		STR-A
5500	1091 0335 DOLLA	EPOXY INJECTION CRACK SEAL		STR-A
3000	1999 9999 HOUR	TRAINEES		NO TAB
EITHER X	8140 0001 LS	BRIDGE STRUCTURE AS DESIGNED, S-27038 ◆	2	STR-A
AND 444610	1002 0053 LB	REINFORCEMENT BARS, EPOXY COATED	2	STR-A
AND 295	9006 0207 LF	35" DIAMETER DRILLED CAISSONS, SHAFT SECTION IN SOIL ◆	2	STR-A
AND 251	9006 0211 LF	60" DIAMETER DRILLED CAISSONS, SHAFT SECTION IN SOIL ◆	2	STR-A
AND 123	9006 0231 LF	60" DIAMETER DRILLED CAISSONS, SHAFT SECTION IN ROCK ◆	2	STR-A
AND 142	9006 0306 LF	30" DIA DRILLED CAISSONS, ROCK SOCKET ◆	2	STR-A
AND 340	9006 0330 LF	54" DIA DRILLED CAISSONS, ROCK SOCKET ◆	2	STR-A
OR X	8000 0001 LS	PRESTRESSED CONCRETE BRIDGE STRUCTURE ◆	2	STR-A
AND	9006 0207 LF	36" DIAMETER DRILLED CAISSONS, SHAFT SECTION IN SOIL ◆	2	STR-A
AND	9006 0211 LF	60" DIAMETER DRILLED CAISSONS, SHAFT SECTION IN SOIL ◆	2	STR-A
AND	9006 0231 LF	60" DIAMETER DRILLED CAISSONS, SHAFT SECTION IN ROCK ◆	2	STR-A
AND	9006 0306 LF	30" DIA DRILLED CAISSONS, ROCK SOCKET ◆	2	STR-A
AND	9006 0330 LF	54" DIA DRILLED CAISSONS, ROCK SOCKET ◆	2	STR-A
AND	9006 0207 LF	36" DIAMETER DRILLED CAISSONS, SHAFT SECTION ◆	2	STR-A
AND	9006 0306 LF	30" DIA DRILLED CAISSONS, ROCK SOCKET ◆	2	STR-A
AND	9006 0330 LF	54" DIA DRILLED CAISSONS, ROCK SOCKET ◆	2	STR-A
AND	9006 0207 LF	36" DIAMETER DRILLED CAISSONS, SHAFT SECTION ◆	2	STR-A
AND	9006 0211 LF	60" DIAMETER DRILLED CAISSONS, SHAFT SECTION IN SOIL ◆	2	STR-A
AND	9006 0231 LF	60" DIAMETER DRILLED CAISSONS, SHAFT SECTION IN ROCK ◆	2	STR-A
EITHER X	8600 0001 LS	SOLDIER PILE RETAINING WALL, AS DESIGNED, S-27374 ◆	5	STR-D
AND 4200	1002 0053 LB	REINFORCEMENT BARS, EPOXY COATED	5	STR-D
AND 292	1006 0207 LF	36" DIAMETER DRILLED CAISSONS, SHAFT SECTION	5	STR-D
AND 245	1006 0306 LF	30" DIAMETER DRILLED CAISSONS, ROCK SOCKET	5	STR-D
AND 295	9000 0400 LF	FABRICATED STRUCTURAL STEEL, HP 14X73 - GALVANIZED ◆	5	STR-D
AND 385	9000 0401 LF	FABRICATED STRUCTURAL STEEL, W 18X130 - GALVANIZED ◆	5	STR-D
OR X	8610 0001 LS	CONCRETE RETAINING WALL ◆	5	STR-D
EITHER X	8600 0002 LS	SOLDIER PILE RETAINING WALL, AS DESIGNED, S-27372 ◆	3	STR-B
AND 3100	1002 0053 LB	REINFORCEMENT BARS, EPOXY COATED	3	STR-B
AND 1170	1006 0207 LF	36" DIAMETER DRILLED CAISSONS, SHAFT SECTION	3	STR-B
AND 36	1006 0307 LF	36" DIAMETER DRILLED CAISSONS, ROCK SOCKET	3	STR-B
AND 1460	9000 0402 LF	FABRICATED STRUCTURAL STEEL W24X176 GALVANIZED STEEL ◆	3	STR-B
OR X	8610 0002 LS	REINFORCED CONCRETE RETAINING WALL SYSTEM ◆	3	STR-B
X	9000 0001 LS	JACK AND BORE ◆		27-28
X	9000 0002 LS	TEMPORARY RAILROAD CROSSING ◆		25
X	9000 0020 LS	4 INCH WATER SERVICE LINE RELOCATION ◆		25
372	9000 0025 SY	PLAIN CEMENT CONCRETE GUTTER, SPECIAL ◆		24
15000	9000 0030 DOLLAR	WASTE MANAGEMENT ◆		NO TAB
25	9000 0050 EACH	GRAVEL FILTER FOR AREA INLET ◆		32-35
7	9000 0051 EACH	GRAVEL FILTER FOR CURB INLET ◆		32-35
98	9000 0052 SY	BRIDGE APPROACH SLAB AT ABUTMENT 1 ◆		24
119	9000 0053 SY	BRIDGE APPROACH SLAB AT ABUTMENT 2 ◆		24
122	9000 0054 SY	BRIDGE APPROACH SLAB AT ABUTMENT 3 ◆		24
554	9000 0055 LF	PA HT ROADWAY BARRIER ◆		26
8094	9000 0080 LF	DRILLING GROUT HOLES ◆		25
1036	9000 0081 CY	CLASS C CEMENT CONCRETE GROUTING ◆		25
9369	9000 0082 CF	CEMENT FILLER GROUT ◆		25
684	9000 0083 LF	NX TEST BORING HOLES ◆		25
410	9000 0100 LF	TEMPORARY CONSTRUCTION FENCE ◆		TCP
5000	9000 0101 DOLLAR	SIGNAL TIMING REVISIONS ◆		TCP
3	9000 0300 EACH	1 1/4" CONDUIT DEFLECTION JOINT FITTING ◆		26
X	9073 0001 LS	DISPOSAL OF BRIDGE WASTE ◆		STR-A
X	9077 0001 LS	WORKER HEALTH AND SAFETY ◆		STR-A
X	9108 2005 LS	CRITICAL PATH METHOD (CPM) ◆		NO TAB
X	9203 0001 LS	TEMPORARY EXCAVATION SUPPORT AND PROTECTION SYSTEM ◆		STR-A

COMMONWEALTH OF PENNSYLVANIA
MICHAEL J. MUTH
ENGINEER
PE040815E

A-00122496

RAFFIC CONTROL PLAN
- SIGNING AND PAVEMENT MARKING PLAN
GHWAY LIGHTING PLAN
E SPECIAL PROVISIONS

SUMMARY

S-27038 = STR-A
S-27372 = STR-B
S-27373 = STR-C
S-27374 = STR-D

REVISION NO.	REVISIONS	DATE	BY	DISTRICT	COUNTY	ROUTE	SECTION	SHEET
				10-0	ARMSTRONG	1038	150	23 OF 45
				E FRANKLIN TWP, APPLEWOLD AND W. KITTANNING BOROS				

QUANTITY	ITEM NO / UNIT	DESCRIPTION	DESIGN NO	FOR TAB SEE SHEET
127	9501 0030 SY	PLAIN CEMENT CONCRETE PAVEMENT, 9" DEPTH, SPECIAL ◆		24
11	9601 0001 EACH	SLOPE PIPE ANCHOR ◆		27-28
265	9601 0002 LF	36" REINFORCED CONCRETE PIPE ALONG WALL E ◆		27-28
1	9605 2001 EACH	TYPE C INLET SPECIAL ◆		29-30
9	9605 2060 EACH	TYPE M INLET SPECIAL ◆		29-30
6	9605 2066 EACH	TYPE M INLET, TYPE 1 BOX ◆		29-30
2	9623 0121 EACH	END TRANSITION, PA HT ROADWAY BARRIER ◆		26
221	9676 0001 SY	CEMENT CONCRETE SIDEWALK, SPECIAL ◆		24
EITHER 46	9695 0001 SF	DETECTABLE WARNING SURFACE, CAST IRON ◆	1	24
OR	9695 0002 SF	DETECTABLE WARNING SURFACE, POLYMER CONCRETE ◆	1	24
OR	9695 0003 SF	DETECTABLE WARNING SURFACE, POLYMER COMPOSITE ◆	1	24
~~EITHER~~	9741 2205 LS	PREFABRICATED T-WALL RETAINING WALL SYSTEM AS DESIGNED, S-27373 ◆	4	STR-C
~~OR~~	8610 0003 LS	CONCRETE RETAINING WALL ◆	4	STR-C
~~OR~~	8600 0003 LS	SOLDIER PILE RETAINING WALL ◆	4	STR-C
~~OR~~	8641 0003 LS	MECHANICALLY STABILIZED WALL ◆	4	STR-C
2	9858 0002 EACH	SEDIMENT FILTER BAG ◆		32-35
634	9865 0001 LF	SUPER SILT BARRIER FENCE ◆		32-35
37	9900 0001 SF	POST MOUNTED EXISTING SIGNS, REMOVE, STORE AND RESET ◆		S & PMP
20000	9901 2004 DOLLAR	OFF-DUTY UNIFORMED POLICE OFFICER ◆		TCP
252	9901 9992 DAY	PORTABLE TEMPORARY TRAFFIC SIGNALS ◆		TCP
4	9910 0154 EACH	POLE FOUNDATION, TYPE HT ◆		HLP
2	9910 0156 EACH	POLE FOUNDATION, TYPE AP ◆		HLP
2204	9910 4114 LF	AWG 4 UNDERGROUND CABLE, COPPER, 1 CONDUCTOR, DISTRIBUTION GROUND WIRE ◆		HLP

COMMONWEALTH OF PENNSYLVANIA
REGISTERED PROFESSIONAL
MICHAEL J. MUTH
ENGINEER

A-00122496

TABULATION OF QUANTITIES

REVISION NO.	REVISIONS	DATE	BY	DISTRICT	COUNTY	ROUTE	SECTION	SHEET
				10-0	ARMSTRONG	1038	150	24 OF 45
				E FRANKLIN TWP, APPLEWOLD AND W. KITTANNING BOROS				

) SEE SUMMARY SHEET FOR COMPLETE ITEM NUMBERS.

ROADWAY

CLASS 1 EXCAVATION 0203 0001 CY	CLASS 1B EXCAVATION 0203 0004 CY	GEOTEXTILE, CLASS 4, TYPE C 0212 0016 SY	SUPERPAVE ASPHALT MIXTURE DESIGN, HMA BASE COURSE, PG 64-22, 3 TO < 10 MILLION ESALS, 25.0 MM MIX, 6" DEPTH 0309 0526 SY	SUBBASE 4" DEPTH (NO. 2A) 0350 0104 SY	SUBBASE 10" DEPTH (NO. 2A) 0350 0110 SY	ASPHALT TREATED PERMEABLE BASE COURSE, 4" DEPTH 0360 0001 SY	SUPERPAVE ASPHALT MIXTURE DESIGN, HMA WEARING COURSE, PG 64-22, 3 TO < 10 MILLION ESALS, 9.5 MM MIX, 1 1/2" DEPTH, SRL-H 0409 0562 SY	SUPERPAVE ASPHALT MIXTURE DESIGN, HMA BINDER COURSE, PG 64-22, 3 TO < 10 MILLION ESALS, 19.0 MM MIX, 2 1/2" DEPTH 0409 6550 SY	BITUMINOUS TACK COAT 0460 0001 SY	PLAIN CEMENT CONCRETE PAVEMENT, 4" DEPTH 0501 0020 SY	PLAIN CEMENT CONCRETE PAVEMENT, 9" DEPTH 0501 0030 SY	PLAIN CEMENT CONCRETE CURB 0630 0001 LF	PLAIN CONCRETE MOUNTABLE CURB, TYPE A 0633 0200 LF	PLAIN CEMENT CONCRETE CURB GUTTER 0641 0005 SY	PLAIN CEMENT CONCRETE CURB GUTTER MODIFIED 4641 0005 SY	CEMENT CONCRETE SIDEWALK 0676 0001 SY	NO. 1 COARSE AGGREGATE 0703 0020 CY	PLAIN CEMENT CONCRETE GUTTER, SPECIAL 9000 0025 SY	BRIDGE APPROACH SLAB AT ABUTMENT 1 9000 0052 SY	BRIDGE APPROACH SLAB AT ABUTMENT 2 9000 0053 SY	BRIDGE APPROACH SLAB AT ABUTMENT 3 9000 0054 SY	PLAIN CEMENT CONCRETE PAVEMENT, 9" DEPTH, SPECIAL 9501 0030 SY	CEMENT CONCRETE SIDEWALK, SPECIAL 9676 0001 SY	TRUNCATED DOMES, DESIGN NO. 1 9695 (+) SF	EMBANKMENT (FOR INFORMATION ONLY) CY		REMARKS ITEM NUM UNIT	SIDE	STATIONS
																												SR 1038		
515												22					51								12				EXTEND CURB/SIDEWALK TO MATCH ADJACENT PROJECT	LT / RT	1947+28.00 TO 1948+25.00
211		632																211										ENTIRE PROJECT, TYPE 1 SUBGRADE UNDERCUT AS NEEDED	LT / RT	1947+28.00 TO 1963+13.88
1275			1535		1894		1535	1535	3070					104		28		222						221		10		SUPERPAVE ASPHALT ROADWAY	LT / RT	1948+25.00 TO 1952+15.00
281				537		479					352							40	98			127				31		CEMENT CONCRETE ROADWAY TO BEGINNING OF STRUCTURE	LT / RT	1952+15.00 TO 1953+71.83
4994																												REMOVAL OF EARTH UNDER BRIDGE FOR PIPE CONSTRUCTION	LT / RT	1956+15.00 TO 1958+98.19
4059	8			1857		1857					1678	16		31	14	186		106		119					10	2715		END OF STRUCTURE TO END OF ROADWAY	LT / RT	1958+98.19 TO 1963+14.13
																												SR 4023		
312	4			1061		1061				68	930		126		58											7		INCLUDING CURBED ISLAND TO END OF ROADWAY	LT / RT	20+20.20 TO 22+00.00
24	18			115			105	105																				SUPERPAVE ASPHALT DRIVEWAY	LT	20+60.00
																												SR 4025		
71	4			356		356					266			35	49			4			122					139		END OF STRUCTURE TO END OF ROADWAY	LT / RT	10+65.83 TO 12+25.73
																												ALLEGHENY AVENUE		
66	4			292		292					275	258		21		128									24	2		INCLUDING CURB RADII TO END OF ROADWAY	LT / RT	30+18.17 TO 31+00.00
11808	38	632	1535	4218	1894	4045	1640	1640	3070	68	3501	296	126	191	121	373	211	372	98	119	122	127	221	46	2904			TOTALS		

COMMONWEALTH OF PENNSYLVANIA — MICHAEL J. MUTH — ENGINEER — PE040815E

A-00122496

TABULATION OF QUANTITIES

MISCELLANEOUS

REVISION NO.	REVISIONS	DATE	BY	DISTRICT	COUNTY	ROUTE	SECTION	SHEET
				10-0	ARMSTRONG	1038	150	25 OF 45
				E FRANKLIN TWP, APPLEWOLD AND W. KITTANNING BOROS				

ITEM NUM UNT	REMARKS	SIDE	STATIONS
0201 0001 LS CLEARING AND GRUBBING			
4810 0052 EACH SELECTIVE TREE REMOVAL MODIFIED			
9000 0002 LS TEMPORARY RAILROAD CROSSING			
9000 0020 LS 4 INCH WATER SERVICE LINE RELOCATION			
9000 0080 LF DRILLING GROUT HOLES			
9000 0081 CY CLASS C CEMENT CONCRETE GROUTING			
9000 0082 CF CEMENT FILLER GROUT			
9000 0083 LF NX TEST BORING HOLES			
	ENTIRE PROJECT		
30	AS DIRECTED		1944+50.00 TO 1963+27.29
	SR 1038 SECTION 150		
8094 1036 9369 684	MINE VOID GROUTING	LT / RT	1952+15.00 TO 1953+75.00
1	TEMPORARY RAILROAD CROSSING. SEE DETAIL AND CONSTRUCTION SPECIFICATIONS	LT / RT	1953+50.00 TO 1959+25.00
1	RELOCATE 4 INCH WATER LINE	LT / RT	1956+20.00 TO 1956+60.00
30 1 1 8094 1036 9369 684	TOTALS		

COMMONWEALTH OF PENNSYLVANIA REGISTERED PROFESSIONAL MICHAEL J. MUTH ENGINEER PE049518E

A-00122496

TABULATION OF QUANTITIES

GUIDE RAIL

REVISION NO.	REVISIONS	DATE	BY	DISTRICT	COUNTY	ROUTE	SECTION	SHEET
				10-0	ARMSTRONG	1038	150	26 OF 45
				E. FRANKLIN TWP., W. KITTANNING & APPLEWOLD BORO'S				

TYPICAL AND ALTERNATE CONCRETE BRIDGE BARRIER TRANSITION WITHOUT INLET PLACEMENT 0620 0010 EACH	TERMINAL SECTION, SINGLE 0620 0400 EACH	REMOVE EXISTING GUIDE RAIL (DEPARTMENT PROPERTY) 0620 0502 LF	TYPE 2-S POST ANCHORAGE 0620 0862 EACH	TYPE 2-S GUIDE RAIL 0620 1075 LF	TYPE 2-SC GUIDE RAIL 0620 1100 LF	TYPE 2 STRONG POST END TREATMENT 0620 1250 EACH	SINGLE FACE CONCRETE GLARE SCREEN 0622 0003 LF	SINGLE FACE CONCRETE BARRIER, 41" HEIGHT 0623 0051 LF	END TRANSITION, SINGLE FACE CONCRETE BARRIER, 41" HEIGHT MODIFIED 4823 0121 EACH	JUNCTION BOXES J.B.-25 0910 0006 EACH	1-1/4" CONDUIT IN STRUCTURE 0910 5252 LF	2" CONDUIT IN STRUCTURE 0910 5255 LF	PA HT ROADWAY BARRIER 9000 0055 LF	1 1/4" CONDUIT DEFLECTION JOINT FITTING 9000 0300 EACH	END TRANSITION, PA HT ROADWAY BARRIER 9623 0121 EACH	REMARKS ITEM NUM UNIT	SIDE	STATIONS
																SR 1038		
							87			3	8	405	418	2	1	TIE TO CEMENT CONCRETE CURB AND TO PA HT BRIDGE BARRIER	RT	1947+38.00 TO 1952+15.00
		487.5														REMOVE GUIDE RAIL	RT	1948+62.00 TO 1953+49.50
								297	1							TIE TO CEMENT CONCRETE CURB GUTTER AND TO BRIDGE BARRIER	LT	1950+10.00 TO 1953+71.83
		462.5														REMOVE GUIDE RAIL	RT	1957+25.00 TO 1961+87.50
										2	4	170	136	1	1	TIE TO PA HT BRIDGE BARRIER AND TO CEMENT CONCRETE CURB GUTTER	RT	1958+98.19 TO 1961+00.00
1	1				162.5			176								TIE TO BRIDGE BARRIER AND TERMINAL SECTION AT DRIVEWAY (R= 216'-8", 347'-4")	LT	1958+98.19 TO 1962+40.00
																SR 4023		
		187.5	1	175												TIE TO TYPE 2-S POST ANCHORAGE AND TO EXISTING GUIDE RAIL (R=25', 125')	RT	20+46.00 TO 22+00.00
																SR 4025		
1					12.5	1										TIE TO BRIDGE BARRIER AND STRONG POST END TREATMENT	LT	11+01.77 TO 11+66.00
1		162.5		100	12.5											TIE TO BRIDGE BARRIER AND EXISTING GUIDE RAIL	RT	11+01.77 TO 12+28.50
3	1	1300	1	275	187.5	1	87	473	1	5	12	575	554	3	2	TOTALS		

COMMONWEALTH OF PENNSYLVANIA — MICHAEL J. MUTH — ENGINEER — FLORIDA

A-00122496

TABULATION OF QUANTITIES

DRAINAGE

REVISION NO.	REVISIONS	DATE	BY	DISTRICT	COUNTY	ROUTE	SECTION	SHEET
				10-0	ARMSTRONG	1038	150	27 OF 45
				E FRANKLIN TWP, APPLEWOLD AND W. KITTANNING BOROS				

CLASS 1 EXCAVATION 0203 0001 CY	CLASS 4 EXCAVATION 0204 0150 CY	GEOTEXTILE, CLASS 1 0212 0001 LF	12" THERMOPLASTIC PIPE, GROUP III, 8'-2" FILL, SHORE/TRENCH BOX 0601 0451 LF	15" THERMOPLASTIC PIPE, GROUP III, 8'-2" FILL, SHORE/TRENCH BOX 0601 0452 LF	18" THERMOPLASTIC PIPE, GROUP III, 8'-2" FILL, SHORE/TRENCH BOX 0601 0453 LF	36" THERMOPLASTIC PIPE, GROUP III, 8'-2" FILL, SHORE/TRENCH BOX 0601 0459 LF	30" CORRUGATED ALUMINIZED STEEL PIPE, TYPE I, (2 2/3" X 1/2" CORRUGATIONS), 16 GAGE. SHORE/TRENCH BOX 0601 4367 LF	CLEANING EXISTING PIPE CULVERTS, DIAMETERS UP TO AND INCLUDING 36" 0601 5901 LF	12" REINFORCED CONCRETE PIPE TYPE A, 30' - 1.5' FILL 0601 7005 LF	18" REINFORCED CONCRETE PIPE, TYPE A, 15' - 2' FILL 0601 7014 LF	12" REINFORCED CONCRETE PIPE, TYPE A, 15' - 2' FILL, SHORE/TRENCH BOX 0601 7505 LF	18" REINFORCED CONCRETE PIPE, TYPE A, 7' - 3' FILL, SHORE/TRENCH BOX 0601 7509 LF	18" REINFORCED CONCRETE PIPE, TYPE A, 15' - 3' FILL, SHORE/TRENCH BOX 0601 7511 LF	30" REINFORCED CONCRETE PIPE, TYPE A, 7' - 3' FILL, SHORE/TRENCH BOX 0601 7526 LF	36" REINFORCED CONCRETE PIPE, TYPE A, 15' - 3' FILL, SHORE/TRENCH BOX 0601 7538 LF	18" CORRUGATED ALUMINIZED STEEL PIPE, TYPE I, (2 2/3" X 1/2" CORRUGATIONS), 16 GAGE 0601 9363 LF	18" REINFORCED CONCRETE PIPE, TYPE A, (OPEN JOINT), 7' - 3' FILL SHORE/TRENCH BOX 0604 7509 LF	NO. 57 COARSE AGGREGATE 0703 0025 CY	JACK AND BORE 9000 0001 LS	SLOPE PIPE ANCHOR 9601 0001 EACH	36" REINFORCED CONCRETE PIPE ALONG WALL E 9601 0002 LF	MAXIMUM FILL HEIGHT (FOR INFORMATION ONLY) FT	AGGREGATE FOR BEDDING (FOR INFORMATION ONLY) CY	COARSE AGGREGATE (FOR INFORMATION ONLY) CY	EMBANKMENT (FOR INFORMATION ONLY) CY		REMARKS	SIDE	STATIONS
																										ITEM NUM UNIT		
																										S.R. 1038		
								107																		ENTIRE PROJECT	LT / RT	1948+25.00 TO 1963+00.00
	25	22															22	15				3				3R TO INLET A-32	LT	1948+25.11 TO 1948+50.00
	2											2										3	0.5	0.5	2	INLET A-32 TO INLET A-31	LT	1948+50.00
	184	118															118	136				6				INLET A-31 TO INLET A-29	LT	1948+50.00 TO 1949+75.00
	2											2										3	0.5	0.5	2	INLET A-30 TO INLET A-29	LT	1949+75.00
	117	94															94	79				4				INLET A-29 TO INLET A-26	LT	1949+75.00 TO 1950+75.00
16	27									36												3	4	6	30	INLET A-27 TO INLET A-25	LT & RT	1950+75.00
	3											2										3	0.5	0.5	2	INLET A-28 TO INLET A-26	LT	1950+75.00
	136	119															119	87				3				INLET A-26 TO INLET A-23	LT	1950+75.00 TO 1952+00.00
8	28									36												3	4	6	22	INLET A-24 TO INLET A-23	LT & RT	1952+00.00
	3											2										3	0.5	0.5	2	INLET A-25 TO INLET A-23	LT	1952+00.00
	150	129															129	97				3				INLET A-23 TO INLET A-21	LT	1952+00.00 TO 1953+35.02
	5											4										3	0.5	0.5	3	INLET A-22 TO INLET A-21	LT	1953+35.02
	92												50							2		9	5	9	73	INLET A-21 TO ELBOW FITTING	LT & RT	1953+35.02 TO 1953+43.25
																74				9				42		ELBOW FITTING TO INLET A-19	RT	1953+43.25 TO 1953+51.70
																			1							INLET A-19 TO INLET A-18	RT	1953+51.70 TO 1953+57.38
	373					144																7		133	200	INLET A-18 TO INLET A-16	RT	1953+57.38 TO 1955+01.51
	10								16													2	1	2	6	PIER 1 DOWNSPOUT TO INLET A-16	RT	1954+87.53 TO 1955+01.51
	157				138																	4		78	69	INLET A-17 TO INLET A-19	RT	1954+89.82 TO 1953+51.70
	364					126																8		116	213	INLET A-16 TO INLET A-14	RT	1955+01.51 TO 1956+28.12
	95			117																		3		59	30	INLET A-15 TO INLET A-17	RT	1956+07.01 TO 1954+89.82
	256					92																8		85	146	INLET A-14 TO INLET A-13	RT	1956+28.12 TO 1957+21.70
	4								6													2	0.5	1	2	PIER 2 DOWNSPOUT TO INLET A-14	RT	1956+32.83 TO 1956+28.12
	476					166																8		167	264	INLET A-13 TO INLET A-12	LT & RT	1957+21.70 TO 1959+85.58
	340																				120	28	28	45	597	INLET A-12 TO MANHOLE A-11	LT	1958+85.58 TO 1960+08.96
	5								7													2	1	1	3	ABUTMENT 2 DOWNSPOUT TO INLET A-12	LT	1958+94.87 TO 1958+85.58
	228	236															236	131				5				INLET A-3 TO INLET A-2	RT	1959+44.99 TO 1961+98.41

COMMONWEALTH OF PENNSYLVANIA — MICHAEL J MUTH — REGISTERED PROFESSIONAL — ENGINEER — RE040156

A-00122496

TABULATION OF QUANTITIES

DRAINAGE

REVISION NO.	REVISIONS	DATE	BY	DISTRICT	COUNTY	ROUTE	SECTION	SHEET
				10-0	ARMSTRONG	1038	150	28 OF 45
				E FRANKLIN TWP, APPLEWOLD AND W. KITTANNING BOROS				

CLASS 1 EXCAVATION 0203 0001 CY	CLASS 4 EXCAVATION 0204 0150 CY	GEOTEXTILE CLASS 1 0212 0001 LF	12" THERMOPLASTIC PIPE, GROUP III, 8'-2" FILL, SHORE/TRENCH BOX 0601 0451 LF	15" THERMOPLASTIC PIPE, GROUP III, 8'-2" FILL, SHORE/TRENCH BOX 0601 0452 LF	18" THERMOPLASTIC PIPE, GROUP III, 8'-2" FILL, SHORE/TRENCH BOX 0601 0453 LF	36" THERMOPLASTIC PIPE, GROUP III, 8'-2" FILL, SHORE/TRENCH BOX 0601 0459 LF	30" CORRUGATED ALUMINIZED STEEL PIPE, TYPE I, (2 2/3" X 1/2" CORRUGATIONS), 16 GAGE, SHORE/TRENCH BOX 0601 4367 LF	CLEANING EXISTING PIPE CULVERTS, DIAMETERS UP TO AND INCLUDING 36" 0501 5901 LF	12" REINFORCED CONCRETE PIPE, TYPE A, 30' - 1.5' FILL 0601 7005 LF	18" REINFORCED CONCRETE PIPE, TYPE A, 15' - 2' FILL 0601 7014 LF	12" REINFORCED CONCRETE PIPE, TYPE A, 15' - 2' FILL, SHORE/TRENCH BOX 0601 7505 LF	18" REINFORCED CONCRETE PIPE, TYPE A, 7' - 3' FILL, SHORE/TRENCH BOX 0601 7509 LF	18" REINFORCED CONCRETE PIPE, TYPE A, 15' - 3' FILL, SHORE/TRENCH BOX 0601 7511 LF	30" REINFORCED CONCRETE PIPE, TYPE A, 7' - 3' FILL, SHORE/TRENCH BOX 0601 7526 LF	36" REINFORCED CONCRETE PIPE, TYPE A, 15' - 3' FILL, SHORE/TRENCH BOX 0601 7538 LF	18" CORRUGATED ALUMINIZED STEEL PIPE, TYPE I, (2 2/3" X 1/2" CORRUGATIONS), 16 GAGE 0601 9363 LF	18" REINFORCED CONCRETE PIPE, TYPE A, (OPEN JOINT), 7' - 3' FILL, SHORE/TRENCH BOX 0604 7509 LF	NO. 57 COARSE AGGREGATE 0703 0025 CY	JACK AND BORE 9000 0001 LS	SLOPE PIPE ANCHOR 9601 0001 EACH	36" REINFORCED CONCRETE PIPE ALONG WALL E 9601 0002 LF	MAXIMUM FILL HEIGHT (FOR INFORMATION ONLY) FT	AGGREGATE FOR BEDDING (FOR INFORMATION ONLY) CY	COARSE AGGREGATE (FOR INFORMATION ONLY) CY	EMBANKMENT (FOR INFORMATION ONLY) CY		ITEM NUM UNIT REMARKS	SIDE	STATIONS
9	28									36										5	4	6	22		INLET A-4 TO INLET A-3	LT & RT	1959+45.27 TO 1959+44.99
	594																145	28	33	54	722		MANHOLE A-11 TO INLET A-5	LT	1960+08.96 TO 1961+28.91
	548														126			18	29	47	422		INLET A-5 TO INLET A-1	LT	1961+28.91 TO 1962+29.23
	96													55				9	6	10	74		INLET A-2 TO INLET A-1	LT & RT	1961+98.41 TO 1962+29.23
	320														114			18	26	43	206		INLET A-1 TO OUTLET A-0	LT	1962+29.23 TO 1963+27.29
	3		4															2		2	1		INLET C-1 TO OUTLET C-0	RT	1962+96.80 TO 1963+09.74
																							S.R. 4025		
												4						2	0.5	0.5			INLET A-9 TO INLET A-10A	LT	10+75.00
			9															4		4			INLET A-7 TO OUTLET A-6A	RT	10+75.00 TO 10+73.48
										7								4	0.5	1			INLET A-10A TO OUTLET A-10B	LT	10+75.00 TO 10+73.66
	22	34														34	8	2					INLET A-8 TO INLET A-7	RT	11+25.00 TO 10+75.00
																							ALLEGHENY AVE.		
	14												8					4	1	2	9			INLET B-2 TO INLET B-1	LT & RT	30+62.25 TO 30+72.41
	7						4											4		3	3			INLET B-1 TO OUTLET B-0	LT	30+72.41 TO 30+82.37
33	4714	752	13	117	138	528	4	107	29	108	7	16	105	8	240	74	752	553	1	11	265	226	146	925	3125		TOTALS		

COMMONWEALTH OF PENNSYLVANIA — MICHAEL J. MUTH — ENGINEER — PE042615E

A-00122496

TABULATION OF QUANTITIES

DRAINAGE STRUCTURES

REVISION NO.	REVISIONS	DATE	BY	DISTRICT	COUNTY	ROUTE	SECTION	SHEET
				10-0	ARMSTRONG	1038	150	29 OF 45
				E FRANKLIN TWP, APPLEWOLD AND W. KITTANNING BOROS				

MODIFIED MANHOLE 0605 1500 EACH	TYPE C INLET, BICYCLE SAFE GRATE 0605 2010 EACH	TYPE M INLET 0605 2060 EACH	TYPE M INLET, TYPE 1 BOX 0605 2066 EACH	TYPE D-W ENDWALL 0605 2620 EACH	TYPE C INLET SPECIAL 9605 2001 EACH	TYPE M INLET SPECIAL 9605 2060 EACH	TYPE M INLET, TYPE 1 BOX SPECIAL 9605 2066 EACH	ITEM NUM UNIT	REMARKS	SIDE	STATIONS
									S.R. 1038		
	1								INLET A-31	LT	1948+50.00
		1							INLET A-32	LT	1948+50.00
	1								INLET A-29	LT	1949+75.00
		1							INLET A-30	LT	1949+75.00
						1			INLET A-26	LT	1950+75.00
						1			INLET A-27	RT	1950+75.00
		1							INLET A-28	LT	1950+75.00
						1			INLET A-23	LT	1952+00.00
						1			INLET A-24	RT	1952+00.00
		1							INLET A-25	LT	1952+00.00
						1			INLET A-21	LT	1953+35.02
		1							INLET A-22	LT	1953+35.02
		1							INLET A-19	RT	1953+51.70
			1						INLET A-18	RT	1953+57.38
		1							INLET A-17	RT	1954+89.82
							1		INLET A-16	RT	1955+01.51
		1							INLET A-15	RT	1956+07.01
							1		INLET A-14	RT	1956+28.12
							1		INLET A-13	RT	1957+21.70
							1		INLET A-12	LT	1958+85.58
						1			INLET A-3	RT	1959+44.99
						1			INLET A-4	LT	1959+45.27
1									INLET A-11	LT	1960+08.96
							1		INLET A-5	LT	1961+28.91
	1								INLET A-2	RT	1961+98.41
							1		INLET A-1	LT	1962+29.23
	1								INLET C-1	RT	1962+96.80

COMMONWEALTH OF PENNSYLVANIA — REGISTERED PROFESSIONAL — MICHAEL J. MUTH — PE-049816E

A-00122496

TABULATION OF QUANTITIES

DRAINAGE STRUCTURES

REVISION NO.	REVISIONS	DATE	BY	DISTRICT	COUNTY	ROUTE	SECTION	SHEET
				10-0	ARMSTRONG	1038	150	30 OF 45
				E FRANKLIN TWP, APPLEWOLD AND W. KITTANNING BOROS				

MODIFIED MANHOLE 0605 1500 EACH	TYPE C INLET, BICYCLE SAFE GRATE 0605 2010 EACH	TYPE M INLET 0605 2060 EACH	TYPE M INLET, TYPE 1 BOX 0605 2066 EACH	TYPE D-W ENDWALL 0605 2620 EACH	TYPE C INLET SPECIAL 9605 2001 EACH	TYPE M INLET SPECIAL 9605 2060 EACH	TYPE M INLET, TYPE 1 BOX SPECIAL 9605 2066 EACH	ITEM NUM UNIT	REMARKS	SIDE	STATIONS
				1					OUTLET A-0	LT	1963+27.29
									S.R. 4025		
		1							INLET A-10A	LT	10+75.00
						1			INLET A-7	RT	10+75.00
						1			INLET A-9	LT	10+75.00
					1				INLET A-8	RT	11+25.00
									ALLEGHENY AVE.		
	1								INLET B-2	RT	30+62.25
	1								INLET B-1	LT	30+72.41
1	6	9	1	1	1	9	6		TOTALS		

A-00122496

TABULATION OF QUANTITIES

PAVEMENT BASE DRAIN

REVISION NO.	REVISIONS	DATE	BY	DISTRICT	COUNTY	ROUTE	SECTION	SHEET
				10-0	ARMSTRONG	1038	150	31 OF 45
				E. FRANKLIN TWP., W. KITTANNING & APPLEWOLD BORO'S				

GEOTEXTILE, CLASS 1 0212 0001 LF	PAVEMENT BASE DRAIN 0610 7000 LF	SUBGRADE DRAINS 0612 0001 LF	REMARKS ITEM NUMBER UNIT	SIDE	STATIONS
			SR 1038 (BUTLER ROAD)		
248	248		OUTLETS INTO INLET A-27	RT	1948+25.00 TO 1950+73.00
121	121		OUTLETS INTO INLET A-24	RT	1950+77.00 TO 1951+98.00
	45		OUTLETS INTO INLET A-4	LT	1958+98.79 TO 1959+43.27
46	46		OUTLETS INTO INLET B-2	RT	1962+01.41 TO 1962+37.00
72	72		OUTLETS INTO INLET B-1		1962+57.00 TO 1962+94.80
			SR 4023 (TARRTOWN ROAD)		
146	146		CONNECTS TO EXISTING PBD @ STA 22+00	RT	20+57.00 TO 22+00.00
137	137		CONNECTS TO EXISTING PBD @ STA 22+00	LT	20+65.00 TO 22+00.00
	36		OUTLETS INTO INLET B-2	LT	30+64.25 TO 31+00.00
	26		OUTLETS INTO INLET B-1	RT	30+74.41 TO 31+00.00
			SR 4025 (PINE HILL ROAD)		
		22	OUTLETS INTO INLET A-7		10+75.00
99	99		OUTLETS INTO INLET A-8	RT	11+27.00 TO 12+26.00
869	976	22	TOTALS		

GEOTEXTILE, CLASS 1 0212 0001 LF	PAVEMENT BASE DRAIN 0610 7000 LF	SUBGRADE DRAINS 0612 0001 LF	REMARKS ITEM NUMBER UNIT	SIDE	STATIONS

COMMONWEALTH OF PENNSYLVANIA
MICHAEL J. MUTH
ENGINEER
PE049815E

A-00122496

TABULATION OF QUANTITIES

EROSION & SEDIMENT CONTROL

REVISION NO.	REVISIONS	DATE	BY	DISTRICT	COUNTY	ROUTE	SECTION	SHEET
				10-0	ARMSTRONG	1038	150	32 OF 44
				E FRANKLIN TWP, APPLEWOLD AND W. KITTANNING BOROS				

CLASS 1 EXCAVATION 0203 0001 CY	CLASS 2 EXCAVATION 0204 0001 CY	GEOTEXTILE, CLASS 2, TYPE A 0212 0002 SY	GEOTEXTILE, CLASS 4, TYPE A 0212 0014 SY	GABIONS, TYPE A 0626 0001 CY	NO. 1 COARSE AGGREGATE 0703 0020 CY	TOPSOIL FURNISHED AND PLACED 0802 0001 CY	SEEDING AND SOIL SUPPLEMENTS - FORMULA B 0804 0011 LB	SEEDING AND SOIL SUPPLEMENTS - FORMULA D 0804 0013 LB	SEEDING - FORMULA E 0804 0014 LB	SEEDING AND SOIL SUPPLEMENTS - FORMULA L 0804 0020 LB	MULCHING - STRAW 0805 0022 TON	MULCHING - BONDED FIBER MATRIX 0805 0030 SY	TURF REINFORCEMENT MAT 0806 0055 SY	ROCK, CLASS R-5 0850 0033 CY	SILT BARRIER FENCE, 18" HEIGHT 0865 0001 LF	GRAVEL FILTER FOR AREA INLET 9000 0050 EACH	GRAVEL FILTER FOR CURB INLET 9000 0051 EACH	SEDIMENT FILTER BAG 9858 0002 EACH	SUPER SILT BARRIER FENCE 9865 0001 LF	ITEM NUM UNIT	REMARKS	SIDE	STATIONS
																						ENTIRE PROJECT		
									42		2.5											AS DIRECTED	LT & RT	1944+50.00 TO 1963+27.29
																						SR 1038		
								1			0.1											RESEED	RT	1948+20.00 TO 1948+90.00
	1							1			0.1		16									CHANNEL PS-16	LT	1948+25.00 TO 1948+48.00
																		1				INLET NO. A-31	LT	1948+50.00
																	1					INLET NO. A-32	LT	1948+50.00
	2							2			0.1		75									CHANNEL PS-15	LT	1948+58.00 TO 1948+72.00
										38		778										BONDED FIBER MATRIX	RT	1948+90.00 TO 1953+70.00
															30							SILT FENCE	RT	1948+92.00 TO 1949+18.00
															33							SILT FENCE	RT	1949+20.00 TO 1949+49.00
															26							SILT FENCE	RT	1949+48.00 TO 1949+72.00
															12							SILT FENCE	RT	1949+74.00 TO 1949+81.00
																		1				INLET NO. A-29	LT	1949+75.00
																	1					INLET NO. A-30	LT	1949+75.00
	8							1			0.1		61									CHANNEL PS-14	LT	1949+80.00 TO 1950+72.00
															27							SILT FENCE	RT	1949+88.00 TO 1950+06.00
															38							SILT FENCE	RT	1950+06.00 TO 1950+41.00
															34							SILT FENCE	RT	1950+40.00 TO 1950+71.00
															32							SILT FENCE	RT	1950+71.00 TO 1951+01.00
																	1					INLET NO. A-26	LT	1950+75.00
																	1					INLET NO. A-27	RT	1950+75.00
																	1					INLET NO. A-28	LT	1950+75.00
	4							2			0.1		77									CHANNEL PS-13	LT	1950+81.00 TO 1951+97.00
															31							SILT FENCE	RT	1951+01.00 TO 1951+29.00
															41							SILT FENCE	RT	1951+28.00 TO 1951+66.00
															33							SILT FENCE	RT	1951+65.00 TO 1951+96.00
															23							SILT FENCE	RT	1951+96.00 TO 1952+16.00

COMMONWEALTH OF PENNSYLVANIA — REGISTERED PROFESSIONAL — MICHAEL J. MUTH — PE046815E

A-00122496

TABULATION OF QUANTITIES

EROSION & SEDIMENT CONTROL

REVISION NO.	REVISIONS	DATE	BY	DISTRICT	COUNTY	ROUTE	SECTION	SHEET
				10-0	ARMSTRONG	1038	150	33 OF 44
				E FRANKLIN TWP, APPLEWOLD AND W. KITTANNING BOROS				

CLASS 1 EXCAVATION 0203 0001 CY	CLASS 2 EXCAVATION 0204 0001 CY	GEOTEXTILE, CLASS 2, TYPE A 0212 0002 SY	GEOTEXTILE, CLASS 4, TYPE A 0212 0014 SY	GABIONS, TYPE A 0626 0001 CY	NO. 1 COARSE AGGREGATE 0703 0020 CY	TOPSOIL FURNISHED AND PLACED 0802 0001 CY	SEEDING AND SOIL SUPPLEMENTS - FORMULA B 0804 0011 LB	SEEDING AND SOIL SUPPLEMENTS - FORMULA D 0804 0013 LB	SEEDING - FORMULA E 0804 0014 LB	SEEDING AND SOIL SUPPLEMENTS - FORMULA L 0804 0020 LB	MULCHING - STRAW 0805 0022 TON	MULCHING - BONDED FIBER MATRIX 0805 0030 SY	TURF REINFORCEMENT MAT 0806 0055 SY	ROCK, CLASS R-5 0850 0033 CY	SILT BARRIER FENCE, 18" HEIGHT 0865 0001 LF	GRAVEL FILTER FOR AREA INLET 9000 0050 EACH	GRAVEL FILTER FOR CURB INLET 9000 0051 EACH	SEDIMENT FILTER BAG 9858 0002 EACH	SUPER SILT BARRIER FENCE 9865 0001 LF	REMARKS ITEM NUM UNIT	SIDE	STATIONS
																1					INLET NO. A-23	LT	1952+00.00
																1					INLET NO. A-24	RT	1952+00.00
																1					INLET NO. A-25	LT	1952+00.00
	9							2			0.1		81								CHANNEL PS-12	LT	1952+04.00 TO 1953+32.00
																				33	SILT FENCE	RT	1952+35.00 TO 1952+61.00
																				26	SILT FENCE	RT	1952+74.00 TO 1952+96.00
																				32	SILT FENCE	RT	1953+03.00 TO 1953+33.00
																				28	SILT FENCE	RT	1953+26.00 TO 1953+45.00
																1					INLET NO A-21	LT	1953+35.02
																1					INLET NO. A-22	LT	1953+35.02
																				32	SILT FENCE	RT	1953+38.00 TO 1953+66.00
								18			0.5										RESEED	LT & RT	1953+45.00 TO 1961+15.00
								57			1.6										RESEED	LT & RT	1953+50.00 TO 1961+60.00
																1					INLET NO A-19	RT	1953+51.70
																				308	SILT FENCE	LT & RT	1953+55.00 TO 1956+50.00
																1					INLET NO. A-18	RT	1953+57.38
	8																				CHANNEL PS-11	RT	1953+57.38 TO 1955+01.51
	2	13												2							ABUTMENT 1 DOWNSPOUT OUTLET	LT	1953+80.00
	2	13												2							ABUTMENT 1 DOWNSPOUT OUTLET	RT	1953+80.00
																1					INLET NO A-17	RT	1954+89.82
7																					CHANNEL PS-10	RT	1954+89.82 TO 1953+51.70
																1					INLET NO. A-16	RT	1955+01.51
	23																				CHANNEL PS-9	RT	1955+01.51 TO 1956+28.12
																1					INLET NO. A-15	RT	1956+07.01
	10																				CHANNEL PS-8	RT	1956+07.01 TO 1954+89.82
																1					INLET NO. A-14	RT	1956+28.12
	6																				CHANNEL PS-7	RT	1956+28.12 TO 1957+21.70
20			98		20																ROCK CONSTRUCTION ENTRANCE	RT	1956+48.00

COMMONWEALTH OF PENNSYLVANIA — REGISTERED PROFESSIONAL — MICHAEL J. MUTH — LICENSE PE040815E

A-00122496

TABULATION OF QUANTITIES

EROSION & SEDIMENT CONTROL

REVISION NO.	REVISIONS	DATE	BY	DISTRICT	COUNTY	ROUTE	SECTION	SHEET
				10-0	ARMSTRONG	1038	150	34 OF 44
				E FRANKLIN TWP, APPLEWOLD AND W. KITTANNING BOROS				

CLASS 1 EXCAVATION 0203 0001 CY	CLASS 2 EXCAVATION 0204 0001 CY	GEOTEXTILE, CLASS 2, TYPE A 0212 0002 SY	GEOTEXTILE, CLASS 4, TYPE A 0212 0014 SY	GABIONS, TYPE A 0626 0001 CY	NO. 1 COARSE AGGREGATE 0703 0020 CY	TOPSOIL FURNISHED AND PLACED 0802 0001 CY	SEEDING AND SOIL SUPPLEMENTS - FORMULA B 0804 0011 LB	SEEDING AND SOIL SUPPLEMENTS - FORMULA D 0804 0013 LB	SEEDING - FORMULA E 0804 0014 LB	SEEDING AND SOIL SUPPLEMENTS - FORMULA L 0804 0020 LB	MULCHING - STRAW 0805 0022 TON	MULCHING - BONDED FIBER MATRIX 0805 0030 SY	TURF REINFORCEMENT MAT 0806 0055 SY	ROCK, CLASS R-5 0850 0033 CY	SILT BARRIER FENCE, 18" HEIGHT 0865 0001 LF	GRAVEL FILTER FOR AREA INLET 9000 0050 EACH	GRAVEL FILTER FOR CURB INLET 9000 0051 EACH	SEDIMENT FILTER BAG 9858 0002 EACH	SUPER SILT BARRIER FENCE 9865 0001 LF	ITEM NUM UNIT	REMARKS	SIDE	STATIONS
	4	17												4						175		OUTLET NO. D-0	LT	1956+56.00
																1						SILT FENCE	LT	1956+60.00 TO 1958+26.00
										42		878										INLET NO. A-13	RT	1957+21.70
																				1		BONDED FIBER MATRIX	RT	1957+50.00 TO 1961+60.00
	2	13												2								SEDIMENT FILTER BAG	RT	1957+51.00
				8																		PIER 3 DOWNSPOUT OUTLET	LT	1957+80.00
	5	20												5	32							CHANNEL PS-16	LT	1958+30.15 TO 1958+30.50
															40							SILT FENCE	RT	1958+82.00 TO 1959+10.00
																1						OUTLET NO. A-8A	LT	1958+85.00
															43							SILT FENCE	LT	1958+85.00 TO 1959+25.00
																1						INLET NO. A-12	LT	1958+85.58
															43							SILT FENCE	RT	1959+09.00 TO 1959+49.00
																1						INLET NO. A-3	RT	1959+44.99
																1						INLET NO. A-4	LT	1959+45.27
															43							SILT FENCE	RT	1959+47.00 TO 1959+88.00
															82							SILT FENCE	RT	1959+85.00 TO 1960+71.00
															33							SILT FENCE	RT	1960+68.00 TO 1961+04.00
														3								WALL E ROCK PROTECTION	LT	1960+80.00 TO 1960+85.00
															28							SILT FENCE	RT	1961+00.00 TO 1961+29.00
																			1			SEDIMENT FILTER BAG	LT	1961+03.00
																1						INLET NO. A-5	LT	1961+28.91
															36							SILT FENCE	RT	1961+29.00 TO 1961+70.00
					4	1				0.1												RESEED	RT	1961+60.00 TO 1962+10.00
															37							SILT FENCE	RT	1961+70.00 TO 1962+09.00
															37							SILT FENCE	LT	1961+91.00 TO 1961+98.00
																	1					INLET NO. A-2	RT	1961+98.41
															37							SILT FENCE	LT	1962+24.00 TO 1962+26.00
																1						INLET NO. A-1	LT	1962+29.23

COMMONWEALTH OF PENNSYLVANIA — REGISTERED — PENNSYLVANIA — MICHAEL J. MUTH — ENGINEER — PE040515E

A-00122496

TABULATION OF QUANTITIES

EROSION & SEDIMENT CONTROL

REVISION NO.	REVISIONS	DATE	BY	DISTRICT	COUNTY	ROUTE	SECTION	SHEET
				10-0	ARMSTRONG	1038	150	35 OF 44
				E FRANKLIN TWP, APPLEWOLD AND W. KITTANNING BOROS				

0203 0001 CY CLASS 1 EXCAVATION	0204 0001 CY CLASS 2 EXCAVATION	0212 0002 SY GEOTEXTILE, CLASS 2, TYPE A	0212 0014 SY GEOTEXTILE, CLASS 4, TYPE A	0626 0001 CY GABIONS, TYPE A	0703 0020 CY NO. 1 COARSE AGGREGATE	0802 0001 CY TOPSOIL FURNISHED AND PLACED	0804 0011 LB SEEDING AND SOIL SUPPLEMENTS - FORMULA B	0804 0013 LB SEEDING AND SOIL SUPPLEMENTS - FORMULA D	0804 0014 LB SEEDING - FORMULA E	0804 0020 LB SEEDING AND SOIL SUPPLEMENTS - FORMULA L	0805 0022 TON MULCHING - STRAW	0805 0030 SY MULCHING - BONDED FIBER MATRIX	0806 0055 SY TURF REINFORCEMENT MAT	0850 0033 CY ROCK CLASS R-5	0885 0001 LF SILT BARRIER FENCE, 18" HEIGHT	9000 0050 EACH GRAVEL FILTER FOR AREA INLET	9000 0051 EACH GRAVEL FILTER FOR CURB INLET	9858 0002 EACH SEDIMENT FILTER BAG	9885 0001 LF SUPER SILT BARRIER FENCE	ITEM NUM UNIT REMARKS	SIDE	STATIONS
34			164		34															ROCK CONSTRUCTION ENTRANCE	LT	1962+40 00
						2	0.5				0 1									RESEED	RT	1962+65.00 TO 1963+15.00
																	1			INLET NO. C-1	RT	1962+96.80
																				SR 4025		
										2		33								BONDED FIBER MATRIX	RT	10+70.00 TO 11+40.00
																1				INLET NO. A-10A	LT	10+75 00
																1				INLET NO. A-7	RT	10+75.00
																1				INLET NO. A-9	LT	10+75.00
								2			0.1									RESEED	LT	10+80.00 TO 12+30 00
																	1			INLET NO. A-8	RT	11+25 00
																				SR 4023		
						7	1.8				0.1									RESEED	RT	20+45 00 TO 22+00 00
										3		67								BONDED FIBER MATRIX	RT	20+80 00 TO 20+95 00
						6	1.5				0.1									RESEED	LT	21+05 00 TO 22+05 00
															62					SILT FENCE	LT	21+07.00 TO 21+63.00
																				ALLEGHENY		
															59					SILT FENCE	RT	30+44.00 TO 31+00.00
						3	0 8				0 1									RESEED	LT	30+45.00 TO 31+00 00
						2	0.4				0.1									RESEED	RT	30+45.00 TO 31+00.00
																	1			INLET NO. B-2	RT	30+62.25
																	1			INLET NO B-1	LT	30+72.41
61	86	76	262	8	54	24	6	86	42	85	5.9	1756	310	18	931	25	7	2	634	TOTALS		

COMMONWEALTH OF PENNSYLVANIA — REGISTERED PROFESSIONAL — MICHAEL J. MUTH — ENGINEER — PE046815E

A-00122496

DISTRICT	COUNTY	ROUTE	SECTION	SHEET
10-0	ARMSTRONG	1038	150	36 OF 45
EAST FRANKLIN TWP., WEST KITTANNING & APPLEWOLD BORO.'S				

REVISION NUMBER	REVISIONS	DATE	BY

BM ELEV 905.22
32.10' LT, STA 1951+96.95 SR 1038
MAG IN STONE

EXTEND STORM PIPE TO LIMIT OF ROADWAY RECONSTRUCTION AND CAP FOR FUTURE

START WORK
STA 1944+50.00
SR 1038

SR 1038 SURVEY & CONSTR ℄
PI STA 1949+53.77
△ = 11°52'52" LT
D = 4°38'22"
T = 128.51'
L = 256.10'
R = 1235.00'
E = 6.67'
PCC STA = 1948+25.26
PCC STA = 1950+81.36
SE MATCH EXISTING

SR 1038 SURVEY & CONSTR ℄
PI STA 1951+94.78
△ = 8°06'00" LT
D = 3°34'35"
T = 113.43'
L = 226.48'
R = 1602.00'
E = 4.01'
PCC STA = 1950+81.35
PT STA = 1953+07.83
SE = 4.8%

1944 1948 1949 1950 1951 1952 1953 1954

WEST KITTANNING
EAST FRANKLIN
BOROUGH
TOWNSHIP

CURB RAMP
PLCC CURB
SINGLE FACE CONC. GLARE SCREEN (BURIED IN SLOPE)
BEGIN ROADWAY RECONSTRUCTION STA. 1948+25.00
END TRANSITION, PA HT ROADWAY BARRIER (STA. 1947+50.00 TO STA. 1947+91.00)
10'-0" 6'-0" 5'-3" 25'-3" 9'-9" 5'-9" 5'-0" 120'
CEM. CONC. S'WALK
CEM. CONC. S'WALK, SPECIAL
LEGAL RIGHT-OF-WAY LINE
LEGAL RIGHT-OF-WAY LINE FOR FOOT PATH
10' FOOT PATH
CONSTRUCT DRAINAGE DIKE A-32
CONSTRUCT DRAINAGE DIKE A-31
CONSTRUCT DRAINAGE DIKE A-30
CONSTRUCT DRAINAGE DIKE A-29
18" PLCC CURB GUTTER
BITUMINOUS PAVING
SR 1038 (BUTLER ROAD)
N10°58'52"E
N0°54'00"W
SURVEY & CONSTR ℄
END TRANSITION, SINGLE FACE CONC BARRIER, 41" HEIGHT MODIFIED (STA. 1950+10.00 TO STA. 1950+51.00)
CONSTRUCT DRAINAGE DIKE A-28
2'-8" PLCC GUTTER SPECIAL A-26
SINGLE FACE CONC. BARRIER, 41" HEIGHT A-25
CONSTRUCT DRAINAGE DIKE A-25
CONSTRUCT DRAINAGE DIKE A-22
EDGE OF WOODS
BRIDGE BARRIER
2'-8" GUTTER
CONC. PAV'T
BIT. PAV'T
A-27 A-24 A-23 A-21
24' 12' 120'
2'-8" PLCC GUTTER SPECIAL
WALL G
PA HT ROADWAY BARRIER
CEM. CONC. S'WALK, SPECIAL
SEE SPECIAL DETAILS FOR DRILLING AND MINE VOID GROUTING
WALL A
PA HT BRIDGE BARRIER
BRIDGE APPROACH SLAB (STA. 1953+46.83 TO STA. 1953+71.83)
LEGAL RIGHT-OF-WAY LINE
2'-8" GUTTER
5' S'WALK
LEGAL AERIAL EASEMENT
+71 36'
+58 48'
+99 54'
+32 48'
TEMPORARY CONSTRUCTION EASEMENT
+12.5 115'
+74 75'
+44.5 110'
+65 85'
+37 126.5'
+84 140'
+53.5 191'
DRAINAGE EASEMENT SHAWMUT
36"
A-19 A-18
EDGE OF BALLAST/CREEK
EDGE OF BALLAST
PITTSBURGH & SHAWMUT RR
SAN MH
SAN LATERAL
W DUP WILLAWOOD
GRAVEL AREA
GRAVEL ROAD
GRAVEL PILE
2 STORY WOOD BUILDING
LOTTERY PACKAGE BUILDING
WOOD PORCH
EDGE OF WOODS
ELEC POLE WITH LIGHT & WATER HOOKUP
WESTON BRICK BUILDING
METAL BUILDING
EAST FRANKLIN TOWNSHIP
APPLEWOLD BOROUGH

LIMIT OF WORK
STA 1943+75.00
SEG 0040 OFFSET 0112
SR 1038 SEC 150
EAST FRANKLIN TOWNSHIP
ARMSTRONG COUNTY

SEE SHEET 37

STRUCTURE DATA		
	EXISTING	PROPOSED
STATION	1956+07.65	1956+35.83
TYPE	8-SPAN CONCRETE T-BEAM AND SINGLE SPAN STEEL THRU GIRDER	4-SPAN STEEL MULTI-GIRDER AND SINGLE SPAN ROLLED BEAM "T-SPAN"
SPAN	1 @ 49'-6", 5 @ 48'-0", 4 @ 46'-6", 1 @ 32'-5¼", 1 @ 97'-10⅜"	116' - 144'-6" - 144'-6" - 116' AND 39'
UNDERCLEARANCE	22'-0" MIN.	22'-0" MIN.
ROADWAY WIDTH	30' CURB TO CURB	41'-4" CURB TO CURB, 5'-0" SIDEWALK, 2 - 1'-8¼" BARRIERS AND 1'-1" PED. RAILING
SKEW	VARIES - 16°-4' MIN.	90° (85°20'19" @ T-SPAN)
STRUCTURE NO.	S-720	S- S-27038 RECOMMENDED- ___

WALL G STRUCTURE DATA		
	EXISTING	PROPOSED
STATION	EXISTING	1948+94.59 TO 1952+15.00
TYPE		SOLDIER PILE WALL
SPAN	N/A	N/A
CLEARANCE	N/A	N/A
ROADWAY WIDTH	N/A	N/A
SKEW	N/A	N/A
STRUCTURE NO.	N/A	S- S-27374 RECOMMENDED- ___

DRAWN BY	CJC
CHECKED BY	MJM

FOR SURVEY REFERENCES SEE SHEET 39
FOR DRAINAGE DATA SEE SHEET 40
FOR PROFILE SEE SHEET 41

LIST OF PROPERTY OWNERS

1. RICHARD L. CRATTY II AND ELOISA CRATTY, HIS WIFE
2. JAMES W. TERNENT, JR. AND ALICE H. TERNENT, HIS WIFE
3. BARBARA N. PRYDE
4. PATRICK HUTCHISON
5. BUFFALO & PITTSBURGH RAILROAD, INC. BY MERGER WITH PITTSBURG & SHAWMUT RAILROAD, INC.

SCALE
25 FEET 0 25 FEET

SURVEY BOOK NO. 18225

COMMONWEALTH OF PENNSYLVANIA
PROFESSIONAL
MICHAEL J. MUTH
ENGINEER
PE 034615

A-00122496

N:\projects\0432\roadway\Stan\Crp11d1.DGN 7/10/2007

DISTRICT	COUNTY	ROUTE	SECTION	SHEET
10-0	ARMSTRONG	1038	150	37 OF 45

EAST FRANKLIN TWP., WEST KITTANNING & APPLEWOLD BORO.'S

REVISION NUMBER	REVISIONS	DATE	BY

LIST OF PROPERTY OWNERS

4 PATRICK HUTCHISON
5 BUFFALO & PITTSBURGH RAILROAD, INC. BY MERGER WITH PITTSBURG & SHAWMUT RAILROAD, INC.
6 THE BOROUGH OF WEST KITTANNING
7 TIMOTHY WALKOWIAK
8 JAMES E. EDWARDS AND DORIS J. EDWARDS
9 RIVERCLIFF TERRACE, INC. A PENNSYLVANIA CORPORATION
10 RICHARD F. FINK AND MARY ELLEN FINK, HIS WIFE
11 BETSY L. ALEXANDER
12 SHELBY S. WILSON AND ERIN L. WILSON, HUSBAND AND WIFE
13 LLOYD E. ALEXANDER AND NANCY J. ALEXANDER, HUSBAND AND WIFE
14 EDWIN C. BOWER AND SUSAN K. BOWER, HIS WIFE

SR 4025 SURVEY & CONSTR B
PI STA 10+91.65
Δ = 82°36'27" RT
D = 127°19'26"
T = 39.54'
L = 64.88'
R = 45.00'
E = 14.90'
PC STA = 10+52.12
PT STA = 11+17.00
SE = 8.0%

SR 1038 SURVEY & CONSTR B
PI STA 1958+07.86
Δ = 11°40'00" LT
D = 3°58'04"
T = 147.52'
L = 294.03'
R = 1444.00'
E = 7.52'
PC STA = 1956+60.33
PT STA = 1959+54.36
SE = 4.1%

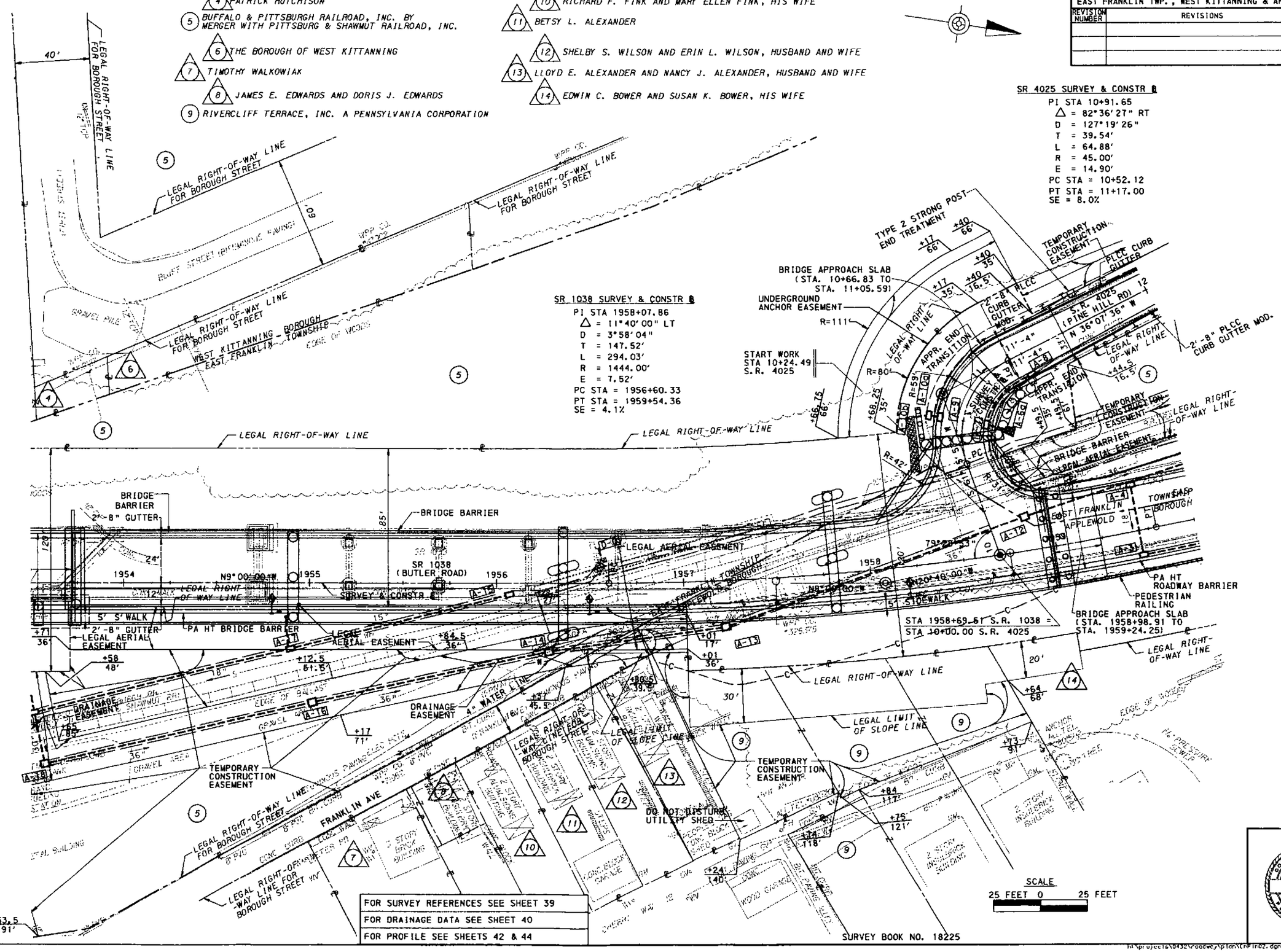

SEE SHEET 36

SEE SHEET 38

DRAWN BY	CJC
CHECKED BY	MJM

FOR SURVEY REFERENCES SEE SHEET 39
FOR DRAINAGE DATA SEE SHEET 40
FOR PROFILE SEE SHEETS 42 & 44

SURVEY BOOK NO. 18225

COMMONWEALTH OF PENNSYLVANIA REGISTERED PROFESSIONAL MICHAEL J. MUTH ENGINEER PE-046972-E

h:\projects\0432\roadway\plan\EnPin02.dgn 7/10/2001

DISTRICT	COUNTY	ROUTE	SECTION	SHEET
10-0	ARMSTRONG	1038	150	38 OF 45

EAST FRANKLIN TWP., WEST KITTANNING & APPLEWOLD BORO.'S

REVISION NUMBER	REVISIONS	DATE	BY

BW ELEV 822.81
32.53' RT, STA 1963+27.29 SR 1038
BRONZE DISK ON WING

STOP WORK
STA 29+25.00
S.R. 4025

WALL E STRUCTURE DATA		
	EXISTING	PROPOSED
STATION	*EXISTING*	1959+06.48 TO 1960+81.50
TYPE	*REINFORCED CONCRETE GRAVITY WALL*	PREFABRICATED T-WALL RETAINING WALL SYSTEM
SPAN	*N/A*	N/A
CLEARANCE	*N/A*	N/A
ROADWAY WIDTH	*N/A*	N/A
SKEW	*N/A*	N/A
STRUCTURE NO.	*N/A*	S- 27373 RECOMMENDED- ___

WALL C STRUCTURE DATA		
	EXISTING	PROPOSED
STATION	*EXISTING*	1959+09.02 TO 1961+75.05
TYPE	*NONE*	SOLDIER PILE WALL
SPAN	*N/A*	N/A
CLEARANCE	*N/A*	N/A
ROADWAY WIDTH	*N/A*	N/A
SKEW	*N/A*	N/A
STRUCTURE NO.	*N/A*	S- 27372 RECOMMENDED- ___

SR 1038 SURVEY & CONSTR ℄
PI STA 1961+91.35
△ = 73°12'00" RT
D = 25°37'24"
T = 166.07'
L = 285.68'
R = 223.61'
E = 54.92'
PC STA = 1960+25.29
PT STA = 1963+10.97
SE = 6.0%

LIST OF PROPERTY OWNERS

(5) PITTSBURG & SHAWMUT RAILROAD, INC.

(14) EDWIN C. BOWER AND SUSAN K. BOWER, HIS WIFE

LIMIT OF WORK
STA 1964+00.00
SEG 0060 OFFSET 0159
SR 1038 SEC 150
EAST FRANKLIN TOWNSHIP
ARMSTRONG COUNTY

SCALE
25 FEET 0 25 FEET

DRAWN BY	CJC
CHECKED BY	MJM

FOR SURVEY REFERENCES SEE SHEET 39
FOR DRAINAGE DATA SEE SHEET 40
FOR PROFILE SEE SHEETS 43 THRU 45
FOR INTERSECTION DETAIL SEE SHEET 8

SURVEY BOOK NO. 18225

SEE SHEET 37

A-00122496

H:\projects\0412\roadway\plan\cr1n03.dgn 1/10/2007

DISTRICT	COUNTY	ROUTE	SECTION	SHEET
10-0	ARMSTRONG	1038	150	39 OF 45

EAST FRANKLIN TWP., WEST KITTANNING & APPLEWOLD BORO.'S

REVISION NUMBER	REVISIONS	DATE	BY

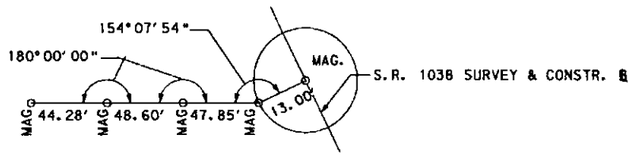

P.C.C. STA. 1948+25.26
S.R. 1038

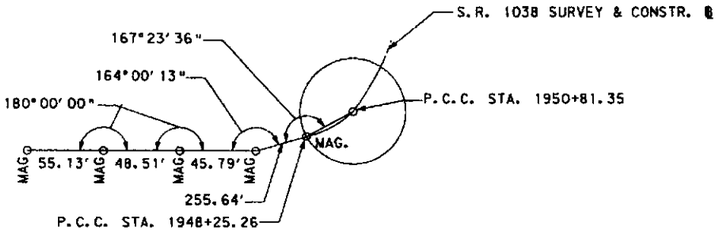

P.C.C. STA. 1950+81.35
S.R. 1038

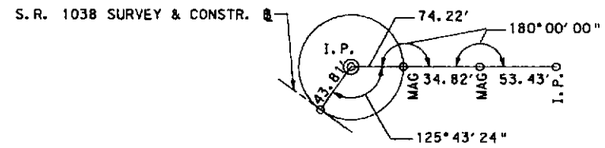

P.O.C. STA. 1961+79.55
S.R. 1038

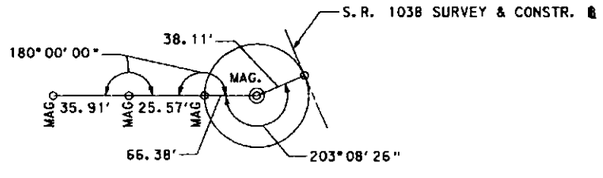

P.O.C. STA. 1962+90.76
S.R. 1038

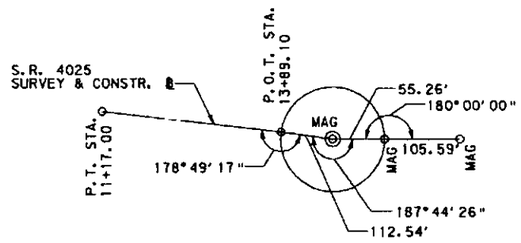

P.O.T. STA. 13+89.13
S.R. 4025

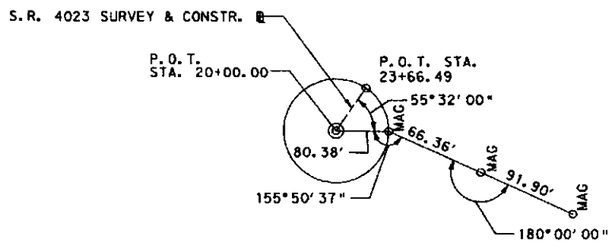

P.O.T. STA. 20+00.00
S.R. 4023

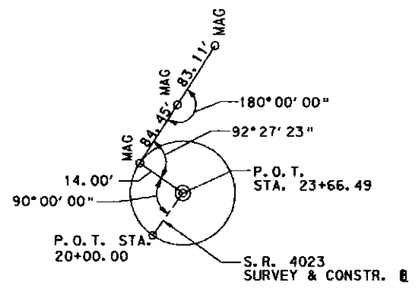

P.O.T. STA. 23+66.49
S.R. 4023

SURVEY REFERENCES

DRAWN BY	RPC
CHECKED BY	MJM

SURVEY BOOK NO. 18225

A-00122496

COMMONWEALTH OF PENNSYLVANIA
REGISTERED PROFESSIONAL
MICHAEL J. MUTH
ENGINEER

h:\projects\0432\roadway\plan\cnder01.dgn 7/10/2007

DISTRICT	COUNTY	ROUTE	SECTION	SHEET
10-0	ARMSTRONG	1038	150	40 OF 45

EAST FRANKLIN TWP., WEST KITTANNING & APPLEWOLD BORO.'S

REVISION NUMBER	REVISIONS	DATE	BY

A-32 SR 1038
STA. 1948+50.00 - 33.33' LT.
TYPE M INLET
T.G. 929.70
INV. OUT - 925.60 (A-31)

A-31 SR 1038
STA. 1948+50.00 - 30.33' LT.
TYPE C INLET, BICYCLE SAFE GRATE
T.G. 929.70
INV. IN - 925.40 (A-32)
INV. OUT - 921.80 (A-29)

A-30 SR 1038
STA. 1949+75.00 - 31.34' LT.
TYPE M INLET
T.G. 919.40
INV. OUT - 915.90 (A-29)

A-29 SR 1038
STA. 1949+75.00 - 28.34' LT.
TYPE C INLET, BICYCLE SAFE GRATE
T.G. 919.87
INV. IN - 914.20 (A-31)
INV. IN - 915.70 (A-30)
INV. OUT - 913.90 (A-26)

A-28 SR 1038
STA. 1950+75.00 - 29.77' LT.
TYPE M INLET
T.G. 911.88
INV. OUT - 907.80 (A-26)

A-27 SR 1038
STA. 1950+75.00 - 14.69' RT.
TYPE M INLET SPECIAL
T.G. 913.67
INV. OUT - 909.50 (A-26)

A-26 SR 1038
STA. 1950+75.00 - 26.77' LT.
TYPE M INLET SPECIAL
T.G. 911.88
INV. IN - 907.60 (A-29)
INV. IN - 907.60 (A-28)
INV. IN - 907.60 (A-27)
INV. OUT - 907.40 (A-23)

A-25 SR 1038
STA. 1952+00.00 - 29.67' LT.
TYPE M INLET
T.G. 901.76
INV. OUT - 897.70 (A-23)

A-24 SR 1038
STA. 1952+00.00 - 14.67' RT.
TYPE M INLET SPECIAL
T.G. 903.55
INV. OUT - 899.50 (A-23)

A-23 SR 1038
STA. 1952+00.00 - 26.67' LT.
TYPE M INLET SPECIAL
T.G. 901.77
INV. IN - 897.50 (A-26)
INV. IN - 897.50 (A-25)
INV. IN - 897.50 (A-24)
INV. OUT - 897.20 (A-21)

A-22 SR 1038
STA. 1953+35.02 - 31.17' LT.
TYPE M INLET
T.G. 891.51
INV. OUT - 887.50 (A-21)

A-21 SR 1038
STA. 1953+35.02 - 26.67' LT.
TYPE M INLET SPECIAL
T.G. 891.51
INV. IN - 887.20 (A-23)
INV. IN - 887.20 (A-22)
INV. OUT - 887.00 (A-19)

A-19 SR 1038
STA. 1953+51.70 - 69.40' RT.
TYPE M INLET
T.G. 821.20
INV. IN - 818.70 (A-21)
INV. IN - 815.80 (A-17)
INV. OUT - 813.80 (A-18)

A-18 SR 1038
STA. 1953+57.38 - 96.98' RT.
TYPE M INLET, TYPE 1 BOX
T.G. 821.10
INV. IN - 813.60 (A-19)
INV. OUT - 813.40 (A-16)

A-17 SR 1038
STA. 1954+89.82 - 35.58' RT.
TYPE M INLET
T.G. 821.30
INV. IN - 817.50 (PIER 1 DOWNSPOUT)
INV. IN - 817.20 (A-15)
INV. OUT - 817.20 (A-19)

A-16 SR 1038
STA. 1955+01.51 - 64.23' RT.
TYPE M INLET, TYPE 1 BOX SPECIAL
T.G. 821.80
INV. IN - 812.80 (A-18)
INV. OUT - 812.60 (A-14)

A-15 SR 1038
STA. 1956+07.01 - 6.15' RT.
TYPE M INLET
T.G. 821.60
INV. OUT - 819.20 (A-17)

A-14 SR 1038
STA. 1956+28.12 - 37.03' RT.
TYPE M INLET, TYPE 1 BOX SPECIAL
T.G. 822.00
INV. IN - 818.50 (PIER 2 DOWNSPOUT)
INV. IN - 812.10 (A-16)
INV. OUT - 811.90 (A-13)

A-13 SR 1038
STA. 1957+21.70 - 24.95' RT.
TYPE M INLET, TYPE 1 BOX SPECIAL
T.G. 820.00
INV. IN - 811.50 (A-14)
INV. OUT - 811.30 (A-12)

A-12 SR 1038
STA. 1958+85.58 - 18.38' LT.
TYPE M INLET, TYPE 1 BOX SPECIAL
T.G. 821.00
INV. IN - 817.50 (ABUTMENT 2 DOWNSPOUT)
INV. IN - 810.70 (A-13)
INV. OUT - 810.50 (A-11)

A-11 SR 1038
STA. 1960+08.96 - 34.24' LT.
MODIFIED MANHOLE
T.G. 837.50
INV. IN - 810.00 (A-12)
INV. OUT - 809.80 (A-5)

A-10a SR 4025
STA. 10+75.00 - 18.50' LT.
TYPE M INLET
T.G. 852.00
INV. IN - 848.20 (A-9)
INV. OUT - 847.00 (A-10b)

A-10b SR 4025
STA. 10+73.66 25.85' LT.
OUTLET
INV. - 846.60

A-9 SR 4025
STA. 10+75.00 - 14.00' LT.
TYPE M INLET SPECIAL
T.G. 853.01
INV. OUT - 848.50 (A-10a)

A-8 SR 4025
STA. 11+25.00 - 13.78' RT.
TYPE C INLET SPECIAL
T.G. 852.32
INV. OUT - 848.00 (A-7)

A-7 SR 4025
STA. 10+75.00 - 14.00' RT.
TYPE M INLET SPECIAL
T.G. 851.12
INV. IN - 847.20 (A-8)
INV. OUT - 847.00 (A-6a)

A-6a SR 4025
STA. 10+73.48 - 22.67' RT.
OUTLET
INV. - 822.50

A-6b SR 1038
STA. 1961+08.59 - 116.79' LT.
HEADWALL
T.W. 821.80
INV. - 819.41 (A-5)

A-5 SR 1038
STA. 1961+28.91 - 70.44' LT.
TYPE M INLET, TYPE 1 BOX SPECIAL
T.G. 822.00
INV. IN - 809.20 (A-11)
INV. IN - 818.31 (A-6b)
INV. OUT - 809.00 (A-1)

A-4 SR 1038
STA. 1959+45.27 - 26.67' LT.
TYPE M INLET SPECIAL
T.G. 845.40
INV. OUT - 841.50 (A-3)

A-3 SR 1038
STA. 1959+44.99 - 14.67' RT.
TYPE M INLET SPECIAL
T.G. 845.81
INV. IN - 839.50 (A-4)
INV. OUT - 839.30 (A-2)

A-2 SR 1038
STA. 1961+98.41 - 22.20' RT.
TYPE C INLET, BICYCLE SAFE GRATE
T.G. 822.03
INV. IN - 818.00 (A-3)
INV. OUT - 817.80 (A-1)

A-1 SR 1038
STA. 1962+29.23 - 28.18' LT.
TYPE M INLET, TYPE 1 BOX SPECIAL
T.G. 822.96
INV. IN 806.60 (A-5)
INV. IN - 813.00 (A-2)
INV. OUT - 805.80 (A-0)

A-0 SR 1038
STA. 1963+27.29 - 59.53' LT.
TYPE D-W ENDWALL
OUTLET
INV. - 794.85

B-2 ALLEGHENY AVENUE
STA. 30+62.25 - 10.60' RT.
TYPE C INLET, BICYCLE SAFE GRATE
T.G. 816.85
INV. OUT - 811.50 (B-1)

B-1 ALLEGHENY AVENUE
STA. 30+72.41 - 11.48' LT.
TYPE C INLET, BICYCLE SAFE GRATE
T.G. 816.37
INV. IN - 809.56 (B-2)
INV. OUT - 809.48 (B-0)

B-0 ALLEGHENY AVENUE
STA. 30+82.89 - 58.85' LT.
OUTLET
INV. - 801.64

C-1 SR 1038
STA. 1962+96.80 - 17.64' RT.
TYPE C INLET, BICYCLE SAFE GRATE
T.G. 820.14
INV. OUT - 816.95 (C-0)

C-0 SR 1038
STA. 1963+09.74 - 39.00' RT.
OUTLET
INV. - 816.00

A-00122496

DRAWN BY	SGM
CHECKED BY	JLT

COMMONWEALTH OF PENNSYLVANIA
PROFESSIONAL
MICHAEL J. MUTH
ENGINEER

DRAINAGE DATA

h:\projects\0432\roadway\plan\tndet07.dgn 7/10/2007

DISTRICT	COUNTY	ROUTE	SECTION	SHEET
10-0	ARMSTRONG	1038	150	41 OF 45

EAST FRANKLIN TWP., WEST KITTANNING & APPLEWOLD BORO.'S

REVISION NUMBER	REVISIONS	DATE	BY

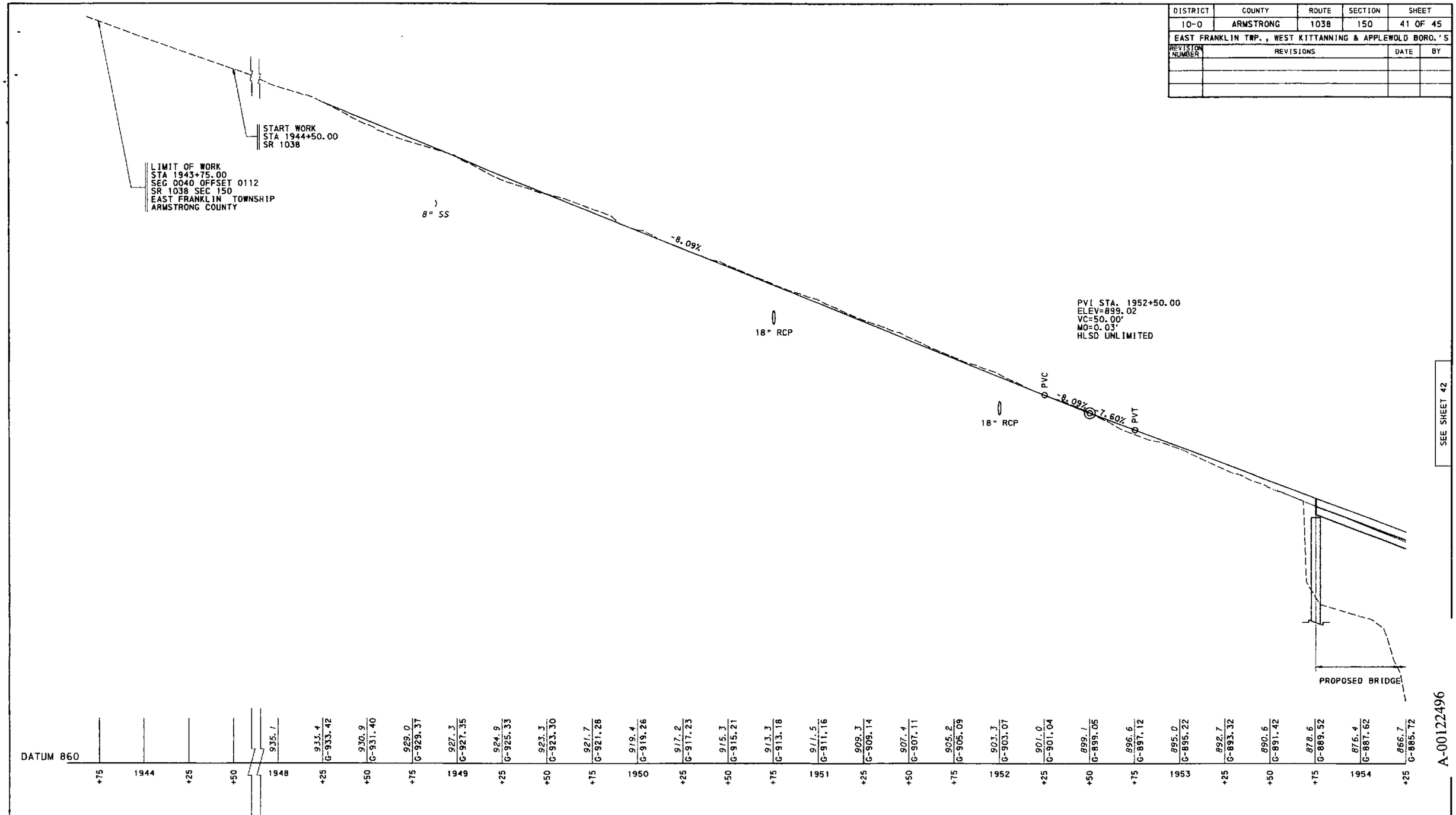

SEE SHEET 42

A-00122496

PROFILE - S.R. 1038

SCALE

HORIZONTAL 25 FEET 0 25 FEET

VERTICAL 5 FEET 0 5 FEET

DRAWN BY	CJC
CHECKED BY	MJM

FOR PLAN SEE SHEET 36

SURVEY BOOK NO. 18225

COMMONWEALTH OF PENNSYLVANIA
REGISTERED PROFESSIONAL
MICHAEL J. MUTH
ENGINEER
PE 044555-E

ht\projects\0432\roadway\plan\ChProfil.dgn 7/10/2007

DISTRICT	COUNTY	ROUTE	SECTION	SHEET
10-0	ARMSTRONG	1038	150	42 OF 45

EAST FRANKLIN TWP., WEST KITTANNING & APPLEWOLD BORO.'S

REVISION NUMBER	REVISIONS	DATE	BY

SEE SHEET 41

SEE SHEET 43

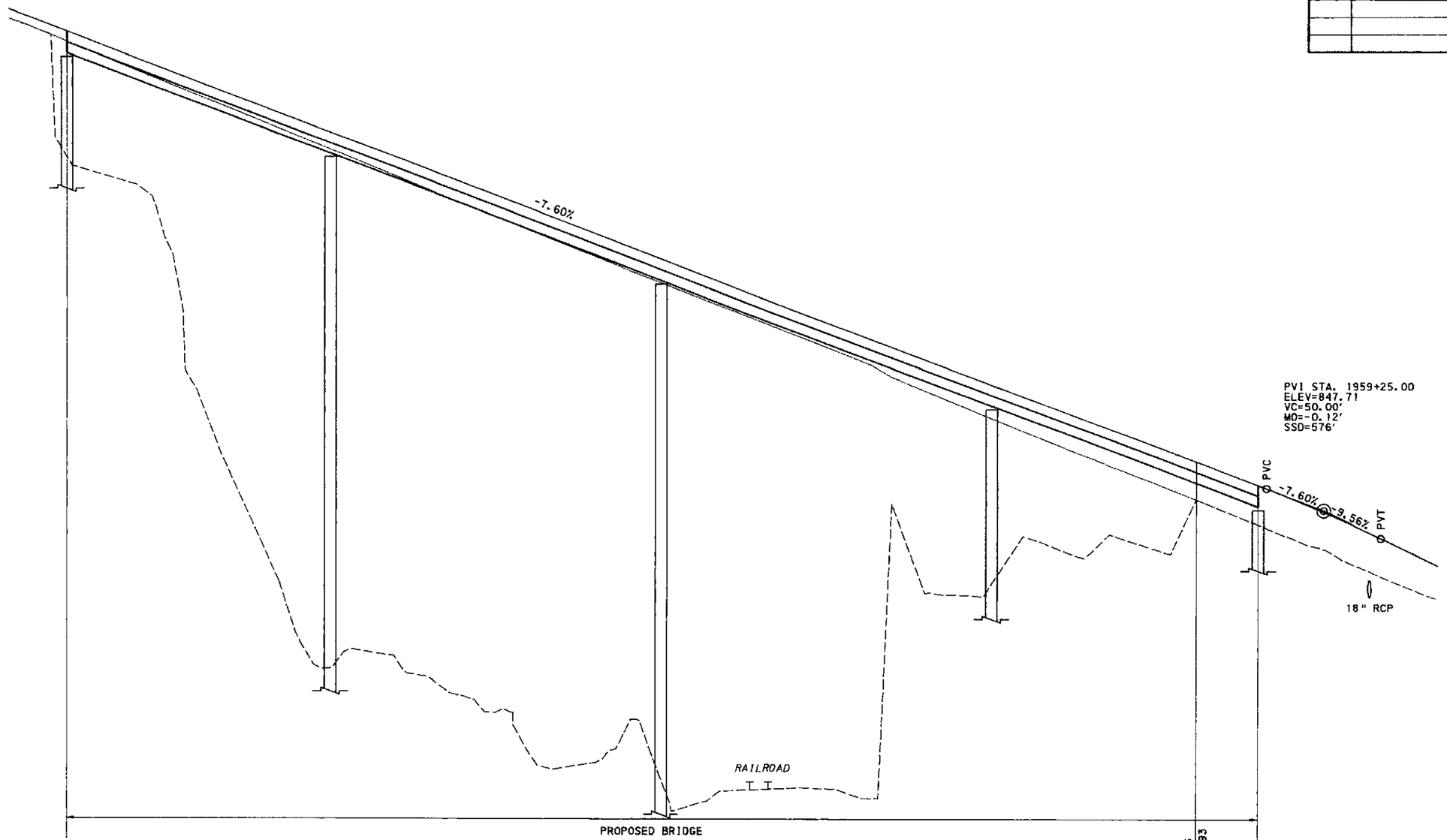

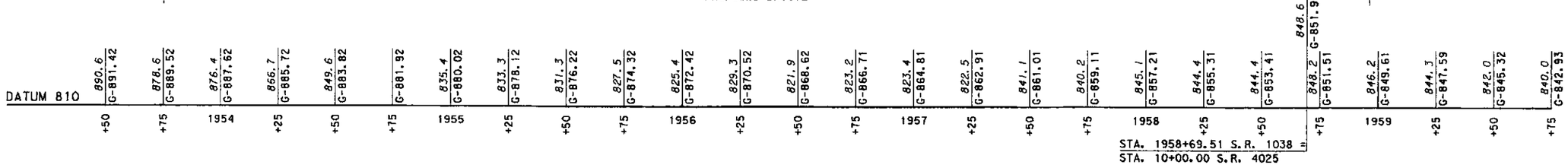

PROFILE - S.R. 1038

SCALE

HORIZONTAL 25 FEET 0 25 FEET

VERTICAL 5 FEET 0 5 FEET

A-00122496

DRAWN BY	CJC
CHECKED BY	MJM

FOR PLAN SEE SHEET 37

SURVEY BOOK NO. 18225

COMMONWEALTH OF PENNSYLVANIA REGISTERED PROFESSIONAL MICHAEL J. MUTH ENGINEER PE-0[illegible]

h:\projects\0432\roadway\plan\chr\road2.dgn 7/10/2007

DISTRICT	COUNTY	ROUTE	SECTION	SHEET
10-0	ARMSTRONG	1038	150	43 OF 45

EAST FRANKLIN TWP., WEST KITTANNING & APPLEWOLD BORO.'S

REVISION NUMBER	REVISIONS	DATE	BY

SEE SHEET 42

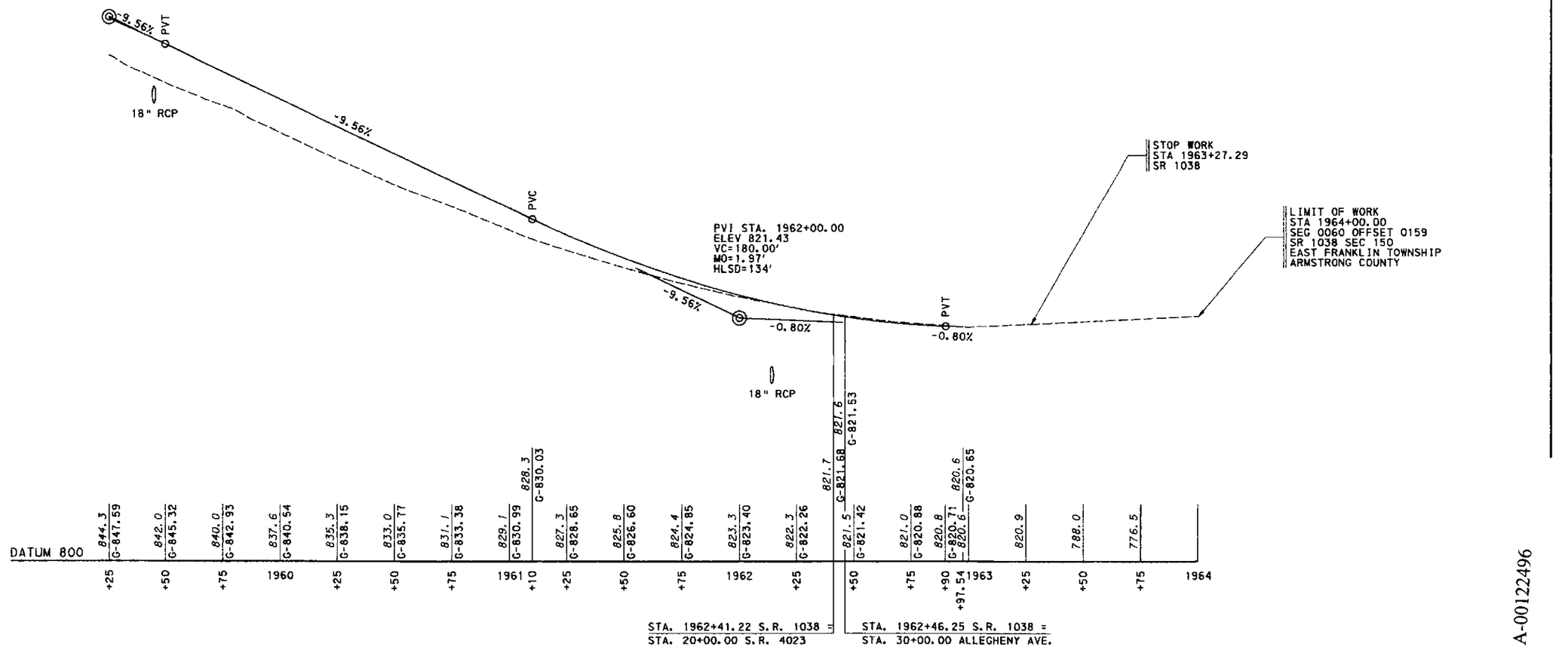

PROFILE - S.R. 1038

SCALE

HORIZONTAL 25 FEET 0 25 FEET

VERTICAL 5 FEET 0 5 FEET

A-00122496

DRAWN BY	CJC
CHECKED BY	MJM

FOR PLAN SEE SHEET 38

SURVEY BOOK NO. 18225

COMMONWEALTH OF PENNSYLVANIA REGISTERED PROFESSIONAL ENGINEER MICHAEL J. MUTH

h:\projects\0432\roadway\plan\CnPro03.dgn 7/10/2007

DISTRICT	COUNTY	ROUTE	SECTION	SHEET
10-0	ARMSTRONG	1038	150	44 OF 45

EAST FRANKLIN TWP., WEST KITTANNING & APPLEWOLD BORO.'S

REVISION NUMBER	REVISIONS	DATE	BY

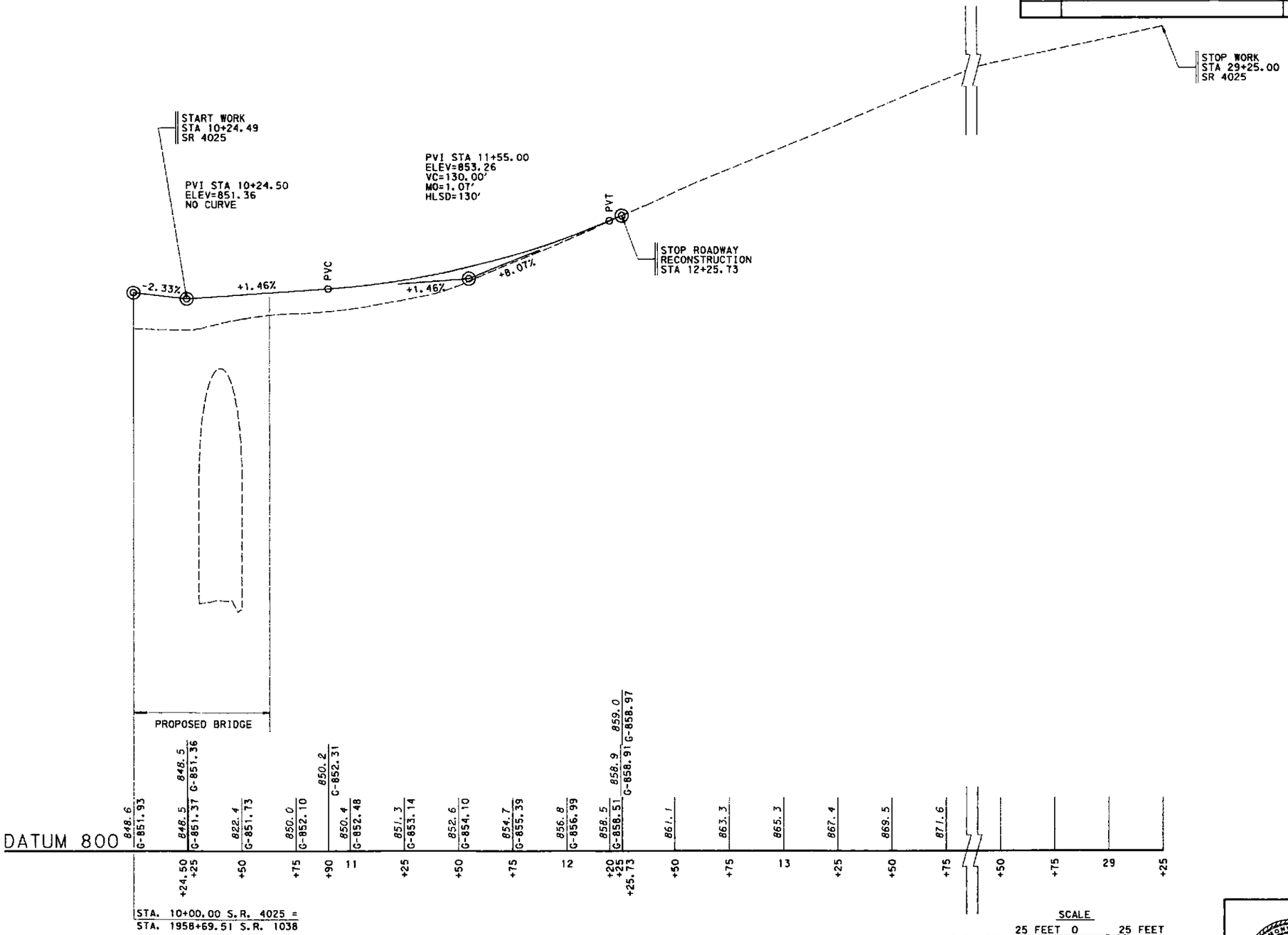

STA. 10+00.00 S.R. 4025 =
STA. 1958+69.51 S.R. 1038

PROFILE - S.R. 4025 (PINE HILL RD)

SCALE

HORIZONTAL 25 FEET 0 25 FEET

VERTICAL 5 FEET 0 5 FEET

DRAWN BY	CJC
CHECKED BY	MJM

FOR PLAN SEE SHEET 37 THRU 38

SURVEY BOOK NO. 18225

A-00122496

COMMONWEALTH OF PENNSYLVANIA
REGISTERED PROFESSIONAL
MICHAEL J. MUTH
ENGINEER

H:\projects\0432\roadway\plan\cnpr004.dgn 7/10/2007

DISTRICT	COUNTY	ROUTE	SECTION	SHEET
10-0	ARMSTRONG	1038	150	45 OF 45

EAST FRANKLIN TWP., WEST KITTANNING & APPLEWOLD BORO.'S

REVISION NUMBER	REVISIONS	DATE	BY

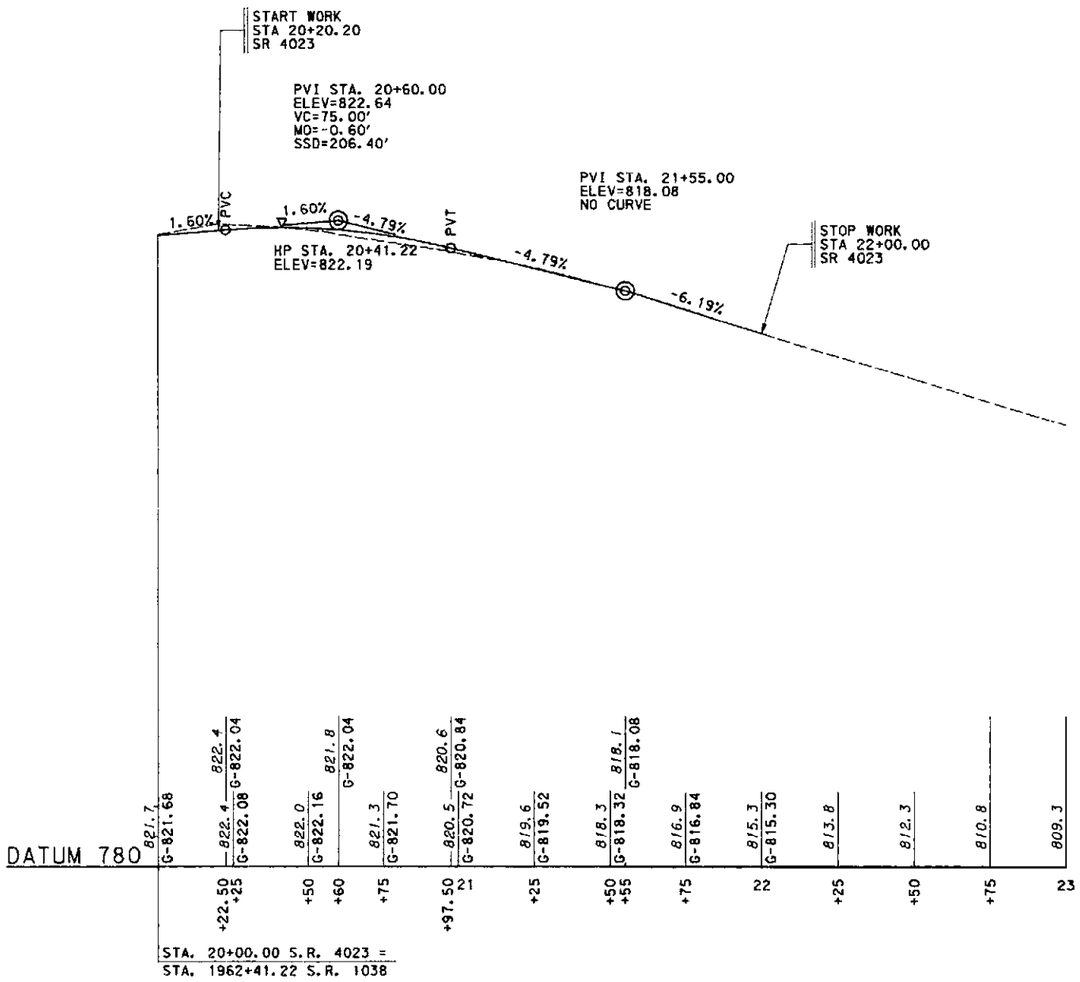

PROFILE - S.R. 4023 (TARRTOWN RD)

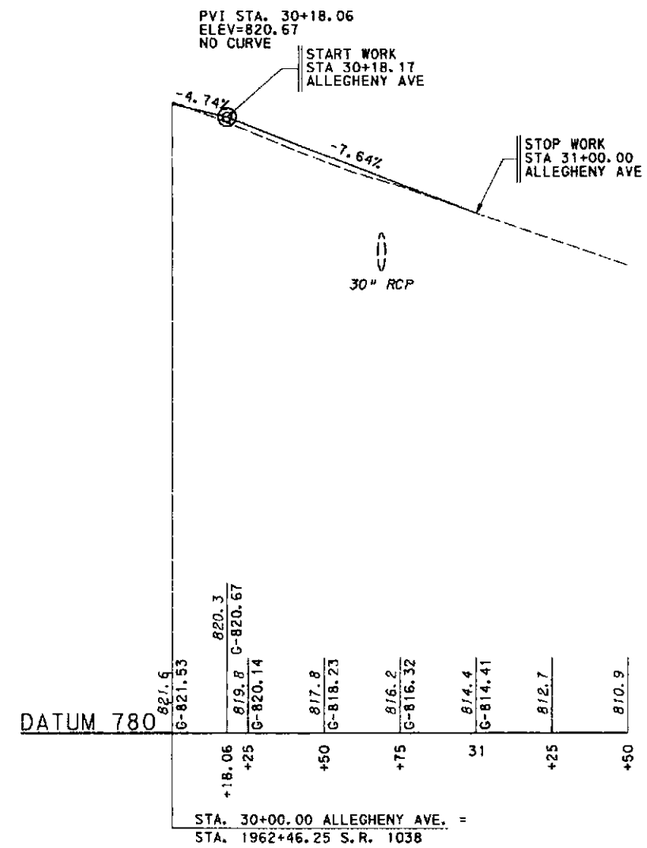

PROFILE - ALLEGHENY AVE

A-00122496

SCALE

HORIZONTAL 25 FEET 0 25 FEET

VERTICAL 5 FEET 0 5 FEET

DRAWN BY	CJC
CHECKED BY	MJM

FOR PLAN SEE SHEET 38

SURVEY BOOK NO. 18225

h:\projects\0432\roadway\plan\tnPro05.dgn 7/10/2007

DISTRICT	COUNTY	ROUTE	SECTION	SHEET
10-0	ARMSTRONG	1038	150	1 OF 14
EAST FRANKLIN TWP., WEST KITTANNING & APPLEWOLD BORO.'S				

REVISION NUMBER	REVISIONS	DATE	BY

GENERAL NOTES

1. THIS WORK CONSISTS OF THE MAINTENANCE OF TRAFFIC AND PROTECTION OF THE TRAVELING PUBLIC APPROACHING THE CONSTRUCTION AREA AND WITHIN THE LIMITS OF CONSTRUCTION.

2. FURNISH, ERECT, PLACE, AND MAINTAIN TRAFFIC CONTROL SIGNS AND DEVICES AND MAINTAIN TRAFFIC DURING HOURS OF CONSTRUCTION AND AT ALL OTHER TIMES IN ACCORDANCE WITH THE METHODS INDICATED ON THESE DRAWINGS AND THE FOLLOWING:
   1. THE SPECIAL PROVISIONS OF THE CONTRACT.
   2. PENNDOT PUBLICATION 213, WORK ZONE TRAFFIC CONTROL GUIDELINES.
   3. PA CODE, TITLE 67, CHAPTER 212, OFFICIAL TRAFFIC CONTROL DEVICES (PENNDOT PUBLICATION 212).
   4. PENNDOT PUBLICATION 35, APPROVED CONSTRUCTION MATERIALS (BULLETIN 15).
   5. PENNDOT PUBLICATION 408/2007, SPECIFICATIONS.
   6. PENNDOT PUBLICATION 236M, HANDBOOK OF APPROVED SIGNS.
   7. PENNDOT PUBLICATION 111M, TRAFFIC CONTROL SIGNING STANDARDS.
   8. FEDERAL HIGHWAY ADMINISTRATION, MANUAL ON UNIFORM TRAFFIC CONTROL DEVICES, 2003 EDITION, REVISION 1.

3. IMMEDIATELY UPON COMPLETION OF THE WORK, REMOVE ALL TRAFFIC CONTROL DEVICES. ALL TRAFFIC CONTROL DEVICES WILL REMAIN THE CONTRACTORS PROPERTY UNLESS OTHERWISE SPECIFIED IN THE SPECIAL PROVISIONS OF THE CONTRACT. THE CONTRACTOR WILL REMOVE ANY EXISTING TRAFFIC CONTROL DEVICES ERECTED BY DEPARTMENT FORCES. THOSE DEVICES WILL REMAIN THE PROPERTY OF THE DEPARTMENT.

4. ERECT ALL TRAFFIC CONTROL DEVICES BEFORE WORK BEGINS. THE INSPECTOR-IN-CHARGE WILL INSPECT ALL TRAFFIC CONTROL DEVICES BEFORE WORK BEGINS.

5. COVER OR REMOVE ALL SIGNS NOT IN USE.

6. MAINTAIN A MINIMUM SPACING OF 200 FEET BETWEEN ALL REGULATORY, WARNING, AND DESTINATION SIGNS (TEMPORARY AND PERMANENT).

7. ALL TRAFFIC CONTROL SIGNS AND DEVICES SHALL BE CONSTRUCTED OF PENNDOT APPROVED TYPE III OR TYPE VII FLUORESCENT ORANGE RETROREFLECTIVE MATERIAL. ALL SIGNS ERECTED ALONG US 422 AND SR 0028 EXPRESSWAY SHALL BE CONSTRUCTED OF PENNDOT APPROVED TYPE VII REFLECTIVE SHEETING.

8. THESE PLANS ARE NOT INTENDED TO RELIEVE THE CONTRACTOR OF HIS RESPONSIBILITY FOR THE PROTECTION OF THE PUBLIC AND THE CONSTRUCTION PERSONNEL. THE STANDARDS PRESCRIBED HEREIN ARE MINIMUM AND ADDITIONAL PROTECTION MAY BE NEEDED IF UNANTICIPATED CONDITIONS ARE ENCOUNTERED DURING THE LIFE OF THE PROJECT. THE CONTRACTOR IS EXPECTED TO CONSTANTLY REVIEW THESE PLANS FOR ADEQUACY AND TO RECOMMEND CHANGES FOR THE ENGINEERS APPROVAL WHEN INADEQUACIES ARE DISCOVERED.

9. THE CONTRACTOR WILL PROVIDE A SUFFICIENT AMOUNT OF THE FOLLOWING SIGNS AVAILABLE IN CASE THEIR USE BECOMES NECESSARY: W20-10 "BE PREPARED TO STOP" AND W20-7a FLAGGER SYMBOL. THESE SIGNS ARE NOT INTENDED TO BE PART OF THE REQUIRED NORMAL TRAFFIC CONTROL OR A SUPPLEMENT THERETO.

10. FURNISH, INSTALL, MAINTAIN, RESET, AND REMOVE PORTABLE TEMPORARY TRAFFIC SIGNAL UNIT(S) IN ACCORDANCE WITH ATTACHED TRAFFIC CONTROL PLAN.

11. LOCATIONS FOR THE CONTRACTOR'S ACCESS WILL BE DETERMINED IN THE FIELD BY THE INSPECTOR-IN-CHARGE. ACCESS POINTS SHOULD INCLUDE FLAGGER FOR ENTIRE TIME THAT THE ACCESS IS BEING USED BY THE CONTRACTOR (TO CONTROL TRAFFIC FROM ENTERING WORK AREA) DETERMINED BY THE ENGINEER.

12. REMOVE ANY CONFLICTING PAVEMENT MARKINGS IN A MANNER APPROVED BY THE INSPECTOR-IN-CHARGE, AND REPLACE UPON COMPLETION OF THE PROJECT.

13. NOTIFY THE DISTRICT TRAFFIC ENGINEER AT LEAST TWO WEEKS PRIOR TO MODIFYING EXISTING TRAFFIC PATTERNS. ALL MODIFICATIONS MUST BE APPROVED BY THE DISTRICT TRAFFIC ENGINEER.

14. MOUNT A TYPE C STEADY BURN LIGHT ON EACH CHANNELIZING DEVICE USED TO TRANSITION TRAFFIC. MOUNT A TYPE C STEADY BURN LIGHT ON EVERY THIRD CHANNELIZING DEVICE USED IN A SERIES TO DELINEATE THE EDGE OF A TRAFFIC LANE.

15. INSTALL AND MAINTAIN TRAFFIC CONTROL SIGNS AND DEVICES THAT ARE IN NEW CONDITION THROUGHOUT THE DURATION OF THE PROJECT. ANY DAMAGE INCURRED SHALL BE IMMEDIATELY REPAIRED OR REPLACED BY THE CONTRACTOR TO THE SATISFACTION OF THE INSPECTOR-IN-CHARGE.

16. THE CONTRACTOR IS RESPONSIBLE FOR THE REMOVAL AND PROPER STORAGE OF ALL UNNECESSARY EXISTING TRAFFIC REGULATORY SIGNS WITHIN THE PROJECT LIMITS. THESE SIGNS WILL REMAIN THE PROPERTY OF THE DEPARTMENT. THE CONTRACTOR IS RESPONSIBLE FOR REINSTALLING THE APPLICABLE SIGNS AT THE END OF THE PROJECT AS DIRECTED BY THE INSPECTOR-IN-CHARGE.

17. ALL MATERIALS ARE TO CONFORM TO PENNDOT PUBLICATION 408/2007, THE SUPPLEMENTS THERETO, AND THE TRAFFIC CONTROL STANDARDS (PENNDOT PUBLICATION 111M).

18. PROVIDE ALL REQUIRED TEMPORARY PAVEMENT MARKINGS AS SHOWN ON THE DRAWINGS, AND AS DIRECTED BY THE INSPECTOR-IN-CHARGE. REMOVE ALL TEMPORARY PAVEMENT MARKINGS WHEN THEY ARE NO LONGER REQUIRED AS APPROPRIATE, AND AS DIRECTED.

19. THE CONTRACTOR SHALL BE RESPONSIBLE FOR PERFORMING DAILY INSPECTIONS, INCLUDING WEEKENDS AND HOLIDAYS, WITH SOME INSPECTIONS AT NIGHT, OF THE TRAFFIC CONTROL DEVICE INSTALLATIONS ON THE PROJECT, INCLUDING ALL TEMPORARY SIGNING. ALL SIGNS AND DEVICES NOT CONFORMING TO PENNDOT STANDARDS SHALL BE IMMEDIATELY REPAIRED OR REPLACED. THE DISTRICT TRAFFIC ENGINEER SHALL BE ADVISED OF THE INSPECTION SCHEDULE AND GIVEN THE OPPORTUNITY TO ACCOMPANY THE INSPECTOR.

20. SIGN LOCATION AND DISTANCES MAY BE ADJUSTED SLIGHTLY TO FIT FIELD CONDITIONS.

21. ALL LONG TERM TRAFFIC CONTROL SIGNING TO BE MOUNTED ON TYPE III BARRICADES UNLESS OTHERWISE NOTED.

22. NO SEPARATE PAYMENT WILL BE MADE FOR FLAGGING OPERATIONS. PAYMENT FOR THIS PROVISION IS INCLUDED IN THE COST ITEM FOR MAINTENANCE AND PROTECTION OF TRAFFIC.

23. ALL TRAFFIC CONTROL SIGNS AND DEVICES MUST COMPLY WITH THE MOST CURRENT NCHRP 350 CRITERIA.

24. THE CONTRACTOR HAS THE OPTION TO SUBMIT ALTERNATE TRAFFIC CONTROL PLANS FOR CONSIDERATION. THESE PLANS SHALL BE SIGNED AND SEALED BY A PROFESSIONAL ENGINEER REGISTERED IN THE COMMONWEALTH OF PENNSYLVANIA AND SHALL BE CONSISTENT WITH STANDARD DESIGN PRACTICES. NO CONSTRUCTION ACTIVITY WILL BE ALLOWED UNTIL THE CONTRACTOR'S ALTERNATE PLANS ARE APPROVED IN WRITING BY THE DISTRICT TRAFFIC ENGINEER. MODIFICATIONS TO THE APPROVED MPT PLAN THAT BECOME NECESSARY SHALL ALSO BE APPROVED BY THE DISTRICT.

25. ONCE THE NOTICE TO PROCEED HAS BEEN GRANTED BY THE DEPARTMENT ESTABLISH THE CURRENT TRAFFIC CONTROL PATTERN THAT IS IN OPERATION. RETURN ALL TRAFFIC CONTROL DEVICES THAT ARE REMOVED TO THE DEPARTMENT.

26. ERECT W23-1 SIGNS (THIS ROAD TO BE CLOSED FOR CONSTRUCTION "DATE") AT POINTS OF CLOSURE TWO WEEKS IN ADVANCE OF CLOSURE.

27. PROVIDE AT LEAST TWO WEEKS ADVANCE NOTICE PRIOR TO ROAD CLOSURE TO THE FOLLOWING:

    DISTRICT COMMUNITY RELATIONS COORDINATOR
    DISTRICT HAULING PERMIT OFFICE
    INSPECTOR-IN-CHARGE
    ADJACENT PROPERTY OWNERS
    LOCAL MUNICIPALITIES
    LOCAL SCHOOL DISTRICT
    LOCAL EMERGENCY SERVICES

28. DURING NON-WORKING HOURS, DO NOT STOP, LEAVE STANDING, OR PARK CONSTRUCTION EQUIPMENT ON A TRAVEL LANE.

29. MAINTAIN ACCESS TO ALL SIDE ROADS, PRIVATE DRIVEWAYS, AND BUSINESSES AT ALL TIMES.

30. PROVIDE ADDITIONAL CHANNELIZING DEVICES AND BARRICADES AT INTERSECTIONS, MAJOR DRIVEWAYS, AND RAMPS TO PREVENT VEHICLES FROM TURNING INTO A LANE CLOSED FOR CONSTRUCTION. SPACE CHANNELIZING DEVICES AT 5 FOOT INTERVALS OR AS DIRECTED BY THE INSPECTOR-IN-CHARGE.

31. MAINTAIN TRAVEL LANE IN GOOD CONDITION WHEN IN USE, TO THE SATISFACTION OF THE INSPECTOR-IN-CHARGE.

32. ALL TEMPORARY PAVING OPERATIONS AND TRANSITIONS TO NEW TRAFFIC PATTERNS ARE TO BE PERFORMED AT NIGHT ONLY.

33. MAINTAIN AND PROTECT PEDESTRIAN TRAFFIC THROUGH CONSTRUCTION AREAS AT ALL TIMES.

34. ALL HIGHWAY WORKERS SHALL WEAR YELLOW/GREEN (ANSI II) VESTS.

35. ALL FLAGGERS SHALL WEAR YELLOW/GREEN (ANSI II) VESTS AND LEGGINGS.

36. MAINTAIN TRAVEL LANE IN GOOD CONDITION, TO THE SATISFACTION OF THE INSPECTOR-IN-CHARGE.

37. CONSTRUCTION DETAILS OTHER THAN THOSE SHOWN ON THESE DRAWINGS TO CONFORM TO THE FOLLOWING STANDARD DRAWINGS:

RC-10M	APRIL 15, 2004
RC-30M	MARCH 30, 2006
TC-8600	MAY 25, 2007
TC-8604	MAY 25, 2007
TC-8700C	MAY 25, 2007
TC-8702B	MAY 25, 2007
TC-8716	MAY 25, 2007

FABRICATED SIGNS

FOR FABRICATED SIGN DETAILS SEE SHEETS 10 AND 11.

THE ORANGE BACKGROUND SHALL BE CONSTRUCTED OF PENNDOT APPROVED FLUORESCENT ORANGE RETROREFLECTIVE MATERIAL.

SIGNS TO BE FABRICATED AND INSTALLED IN ACCORDANCE WITH THE FOLLOWING STANDARD DRAWINGS:

TC 8700C	MAY 25, 2007
TC 8701D	MAY 25, 2007
TC 8716	MAY 25, 2007

ALL FABRICATED SIGNS TO HAVE AN APPROPRIATE SIZED BLACK BORDER, CORNER RADII, AND ORANGE MARGIN.

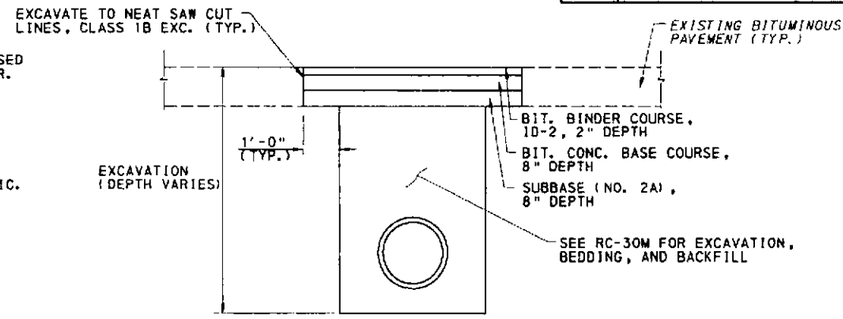

PAVEMENT REPLACEMENT AT PIPE TRENCH

NTS

DURING STAGE 1:
S.R. 1038, AT TEMPORARY PIPE CROSSING
S.R. 4023, AT 36" REINF. CONC. PIPE CROSSING

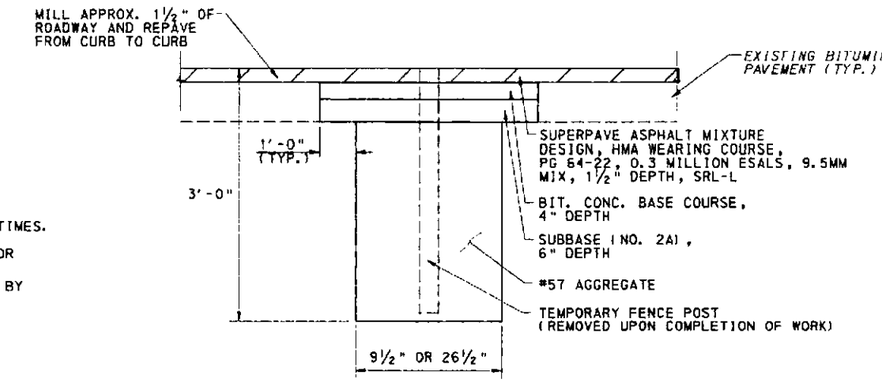

PAVEMENT REPLACEMENT AT FRANKLIN AVENUE

NTS

TRAFFIC DATA

CURRENT A.D.T. - 16,582 (2007)
DESIGN YEAR A.D.T. - 24,640 (2027)

DRAWN BY	CJC
CHECKED BY	KDF

A-00122496

TRAFFIC CONTROL PLAN

RECOMMENDED July 11 20 07

DISTRICT TRAFFIC ENGINEER

CHRISTOPHER JAMES CARROLL — PROFESSIONAL ENGINEER — PE-078855

N:\Proj\2018\0432\Top\Plans\TCPANNOTATE.dgn 7/11/2007

DISTRICT	COUNTY	ROUTE	SECTION	SHEET
10-0	ARMSTRONG	1038	150	2 OF 14
EAST FRANKLIN TWP., WEST KITTANNING & APPLEWOLD BORO.'S				

REVISION NUMBER	REVISIONS	DATE	BY

TABULATION OF TRAFFIC CONTROL DEVICES

(FOR INFORMATION ONLY) INCLUDED IN LUMP SUM ITEM NO. 0901-0001

TRAFFIC CONTROL DEVICE	DESCRIPTION	SIZE	STAGE 1	STAGE 2	STAGE 3	STAGE 4	DETOUR	ESTIMATED QUANTITY REQUIRED
S-1	BUTLER RD CLOSED TO W KITTANNING	84"X54"	--	--	--	--	1	1
S-2	TO KITTANNING TO TARRTOWN USE US 422 EAST BUSINESS DETOUR	114"X72"	--	--	--	--	2	2
S-3	BUTLER RD OPEN TO W KITTANNING	84"X54"	--	--	--	--	2	2
S-4	TO W KITTANNING USE US 422 WEST BUSINESS DETOUR	114"X54"	--	--	--	--	1	1
S-5	TO KITTANNING TO TARRTOWN USE US 422 EAST BUSINESS DETOUR	78"X54"	--	--	--	--	5	5
S-6	BUTLER RD OPEN TO W KITTANNING	60"X42"	--	--	--	--	2	2
S-7	TO W KITTANNING USE US 422 WEST BUSINESS DETOUR	78"X42"	--	--	--	--	5	5
S-8	BUTLER RD CLOSED TO W KITTANNING	60"X42"	--	--	--	--	6	6
G20-2	END ROAD WORK	60"X24"	--	2	2	2	--	2
M1-4	US ROUTE MARKER	45"X36"	--	--	--	--	17	17
M1-4	US ROUTE MARKER	30"X24"	--	--	--	--	49	49
M3-2	EAST	30"X15"	--	--	--	--	10	10
M3-2	EAST	24"X12"	--	--	--	--	22	22
M3-4	WEST	30"X15"	--	--	--	--	7	7
M3-4	WEST	24"X12"	--	--	--	--	27	27
M4-3	BUSINESS	30"X15"	--	--	--	--	17	17
M4-3	BUSINESS	24"X12"	--	--	--	--	49	49
M4-8	DETOUR MARKER	30"X15"	--	--	--	--	12	12
M4-8	DETOUR MARKER	24"X12"	--	--	--	--	34	34
M4-8A	END DETOUR MARKER	24"X18"	--	--	--	--	2	2
M4-9L	DETOUR LEFT TURN MARKER	30"X24"	--	--	--	--	3	3
M4-9R	DETOUR RIGHT TURN MARKER	30"X24"	--	--	--	--	6	6
M4-9S	DETOUR STRAIGHT AHEAD MARKER	30"X24"	--	--	--	--	2	2
M4-10R	DETOUR ARROW RIGHT	36"X12"	--	--	--	--	2	2
M5-1R	ADVANCED 90 DEGREE RIGHT TURN MARKER	21"X15"	--	--	--	--	4	4
M5-1L	ADVANCED 90 DEGREE LEFT TURN MARKER	21"X15"	--	--	--	--	6	6
M5-2R	ADVANCED 45 DEGREE RIGHT TURN MARKER	30"X18"	--	--	--	--	4	4
M5-2R	ADVANCED 45 DEGREE RIGHT TURN MARKER	21"X15"	--	--	--	--	3	3
M5-2L	ADVANCED 45 DEGREE LEFT TURN MARKER	21"X15"	--	--	--	--	2	2
M6-1	90° TURN MARKER	21"X15"	--	--	--	--	10	10
M6-2L	45 DEGREE LEFT TURN MARKER	21"X15"	--	--	--	--	2	2
M6-2R	45 DEGREE RIGHT TURN MARKER	30"X18"	--	--	--	--	4	4
M6-2R	45 DEGREE RIGHT TURN MARKER	21"X15"	--	--	--	--	4	4
M6-3	STRAIGHT THROUGH MARKER	30"X18"	--	--	--	--	4	4
M6-3	STRAIGHT THROUGH MARKER	21"X15"	--	--	--	--	3	3
R5-1	DO NOT ENTER	48"X48"	--	1	1	1	--	1
R5-2	NO TRUCKS	36"X36"	--	2	2	2	--	2
R5-2-3	EXCEPT LOCAL DELIVERIES	36"X30"	--	2	2	2	--	2
R5-10C	PEDESTRIANS PROHIBITED	24"X12"	--	4	6	4	--	6
R11-2	ROAD CLOSED	48"X30"	--	8	8	9	5	14
R11-3A	ROAD CLOSED-LOCAL TRAFFIC ONLY	60"X30"	--	1	1	1	2	3
W20-1	ROAD WORK	36"X36"	5	2	2	2	--	5
W20-2	DETOUR	48"X48"	--	--	--	--	5	5
W20-2	DETOUR	36"X36"	--	--	--	--	15	15
W20-3	ROAD CLOSED	36"X36"	--	--	--	--	6	6
W20-4	ONE LANE ROAD	36"X36"	4	2	2	2	--	4
W20-7a	FLAGGER AHEAD	36"X36"	5	2	2	2	--	5
W21-10	STOP AND SLOW (PADDLE)	24"X24"	5	3	3	3	--	5
W23-1	THIS ROAD TO BE CLOSED FOR CONSTRUCTION (DATE)	24"X24"	3	--	--	--	--	3
W30-1-1	500 FT (PANEL)	20"X6"	--	--	--	--	2	2
W30-1-2	1000 FT (PANEL)	20"X6"	--	--	--	--	1	1
W30-1-3	1500 FT (PANEL)	30"X10"	--	--	--	--	3	3
W30-1-3	1500 FT (PANEL)	20"X6"	--	--	--	--	9	9
W30-1-4	½MILE (PANEL)	30"X10"	--	--	--	--	2	2
W30-1-4	½MILE (PANEL)	20"X6"	--	--	--	--	8	8
W30-1-6	AHEAD (PANEL)	20"X6"	10	4	4	4	1	11
TYPE III	BARRICADE		19	28	30	29	117	147
TYPE B LIGHTS			10	24	24	26	22	48
TYPE C LIGHTS			--	30	26	25	--	27
VERTICAL PANELS			29	66	55	60	--	66

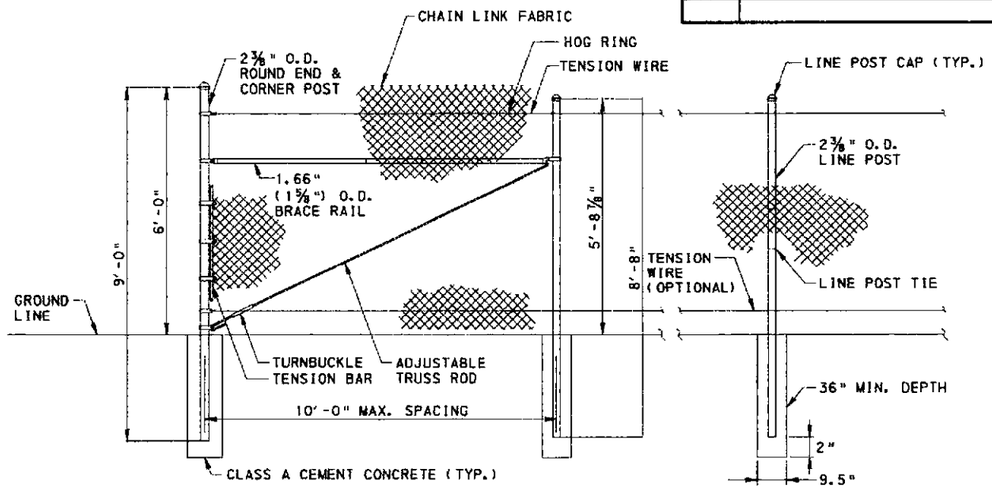

TEMPORARY CONSTRUCTION FENCE

NTS

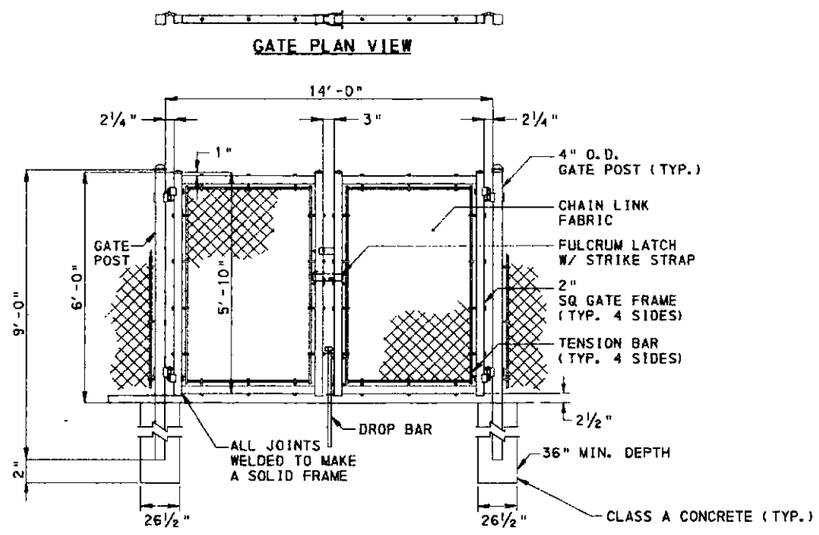

GATE FOR TEMPORARY CONSTRUCTION FENCE

NTS

NOTES:

1. GATES MAY BE MANUALLY OR ELECTRICALLY OPERATED.
2. HARDWARE WILL VARY FOR ELECTRICALLY OPERATED GATES.

A-00122496

TRAFFIC CONTROL PLAN

DRAWN BY	CJC
CHECKED BY	KDF

COMMONWEALTH OF PENNSYLVANIA — PROFESSIONAL — CHRISTOPHER JAMES CAVANAH — ENGINEER

h:\projects\0432\top\plans\TCYA801.dgn 7/11/2007

TABULATION OF QUANTITIES

TRAFFIC CONTROL PLAN

REVISION NO.	REVISIONS	DATE	BY	DISTRICT	COUNTY	ROUTE	SECTION	SHEET
				10-0	ARMSTRONG	1038	150	3 OF 14
				E. FRANKLIN TWP., W. KITTANING & APPLEWOLD BORO.'S				

CLASS 1B EXCAVATION	CLASS 4 EXCAVATION	BITUMINOUS CONCRETE BASE COURSE	SUBBASE (NO. 2A)	SUPERPAVE ASPHALT MIXTURE DESIGN, HMA WEARING COURSE, PG 64-22, < 0.3 MILLION ESALS, 9.5 MM MIX, 1 1/2" DEPTH, SRL-L	BITUMINOUS BINDER COURSE, ID-2, 2" DEPTH	BITUMINOUS BINDER COURSE, ID-2, LEVELING COURSE	BITUMINOUS TACK COAT	MILLING OF BITUMINOUS PAVEMENT SURFACE, VARIABLE DEPTH	24" THERMOPLASTIC PIPE, GROUP II, 12'-1.5' FILL, SHORE/TRENCH BOX	NO. 57 COARSE AGGREGATE	CHANGEABLE MESSAGE SIGN	ADDITIONAL WARNING LIGHTS, TYPE B	ADDITIONAL WARNING LIGHTS, TYPE C	ADDITIONAL TRAFFIC CONTROL SIGNS	4" STANDARD PAVEMENT MARKINGS, PAINT & BEADS, YELLOW	4" STANDARD PAVEMENT MARKINGS, PAINT & BEADS, WHITE	24" STANDARD PAVEMENT MARKINGS, PAINT & BEADS, WHITE	PAVEMENT MARKING REMOVAL	TEMPORARY CONSTRUCTION FENCE	SIGNAL TIMING REVISIONS	OFF-DUTY UNIFORMED POLICE OFFICER	PORTABLE TEMPORARY TRAFFIC SIGNALS					REMARKS	SIDE	STATIONS
0203 0004 CY	0204 0150 CY	0305 0200 TON	0350 0120 CY	0409 0385 SY	0421 0202 SY	0421 0505 TON	0480 0001 SY	0491 0070 SY	0601 0435 LF	0703 0025 CY	0901 0205 EACH	0901 0231 DAY	0901 0232 DAY	0901 0240 SF	0901 0320 LF	0901 0330 LF	0901 0334 LF	0963 0001 SF	9000 0100 LF	9000 0101 DOLLAR	9901 2004 DOLLAR	9901 9982 DAY					ITEM NUM UNIT		
																										ENTIRE PROJECT		
											3	45	45	500						5000	20000	252					AS DIRECTED		
																										STAGE 1		
94	138	83	42		188				75																	SR 1038 & SR 4032 - TEMPORARY PIPE CONSTRUCTION AND PAVEMENT REPLACEMENT FOR TEMP. PIPE AND 36" RCP ACROSS SR 4023	LT & RT	1961+40.00 TO 1961+85.00
																										STAGE 2		
																			410							FRANKLIN AVENUE - TEMPORARY FENCE	LT & RT	
															1360	875	12	1160								SR 1038, INCLUDING CITIZENS BRIDGE - PAVEMENT MARKINGS/ TRAFFIC SIGNAL	LT & RT	
																560	24	261								SR 4023 - PAVEMENT MARKINGS/TRAFFIC SIGNALS	LT	20+00.00 TO 23+20.00
																										STAGE 3		
						44	200	134							440	300		87								SR 4023 - PAVEMENT MARKINGS/ROADWAY REPAIR	LT	20+00.00 TO 22+60.00
																100										ALLEGHENY AVE - PAVEMENT MARKINGS	RT	30+00.00 TO 31+00.00
															120	100		25								SR 1038 - PAVEMENT MARKINGS	LT & RT	1962+50.00 TO 1964+35.00
																										STAGE 4		
											3				50	25		34								SR 1038 - PAVEMENT MARKINGS	LT & RT	
																305	12	80								SR 4023 - PAVEMENT MARKINGS	LT & RT	20+00.00 TO 22+60.00
																100										ALLEGHENY AVE - PAVEMENT MARKINGS	LT	30+00.00 TO 31+00.00
																										ROADWAY/PAVEMENT MARKING CLEAN-UP		
		2	2	232				232		3																FRANKLIN AVENUE - ROADWAY REPAIR	LT & RT	
																		1029								SR 1038, INCLUDING CITIZENS BRIDGE - PAVEMENT MARKINGS	LT & RT	
																		217								SR 4023 - PAVEMENT MARKINGS	LT & RT	20+00.00 TO 23+20.00
																		33								ALLEGHENY AVENUE - PAVEMENT MARKINGS	LT	30+00.00 TO 31+00.00
94	138	85	44	232	188	44	200	366	75	3	6	45	45	500	1970	2365	48	2926	410	5000	20000	252				TOTALS		

COMMONWEALTH OF PENNSYLVANIA — CHRISTOPHER J CAVANAH — REGISTERED PROFESSIONAL ENGINEER

A-00122496

I:\Jobs\0432\Highway\Tabs\TbTCP.mdb 7/11/2007 2:08:40 PM

DISTRICT	COUNTY	ROUTE	SECTION	SHEET
10-0	ARMSTRONG	1038	150	4 OF 14

EAST FRANKLIN TWP., WEST KITTANNING & APPLEWOLD BORO.'S

REVISION NUMBER	REVISIONS	DATE	BY

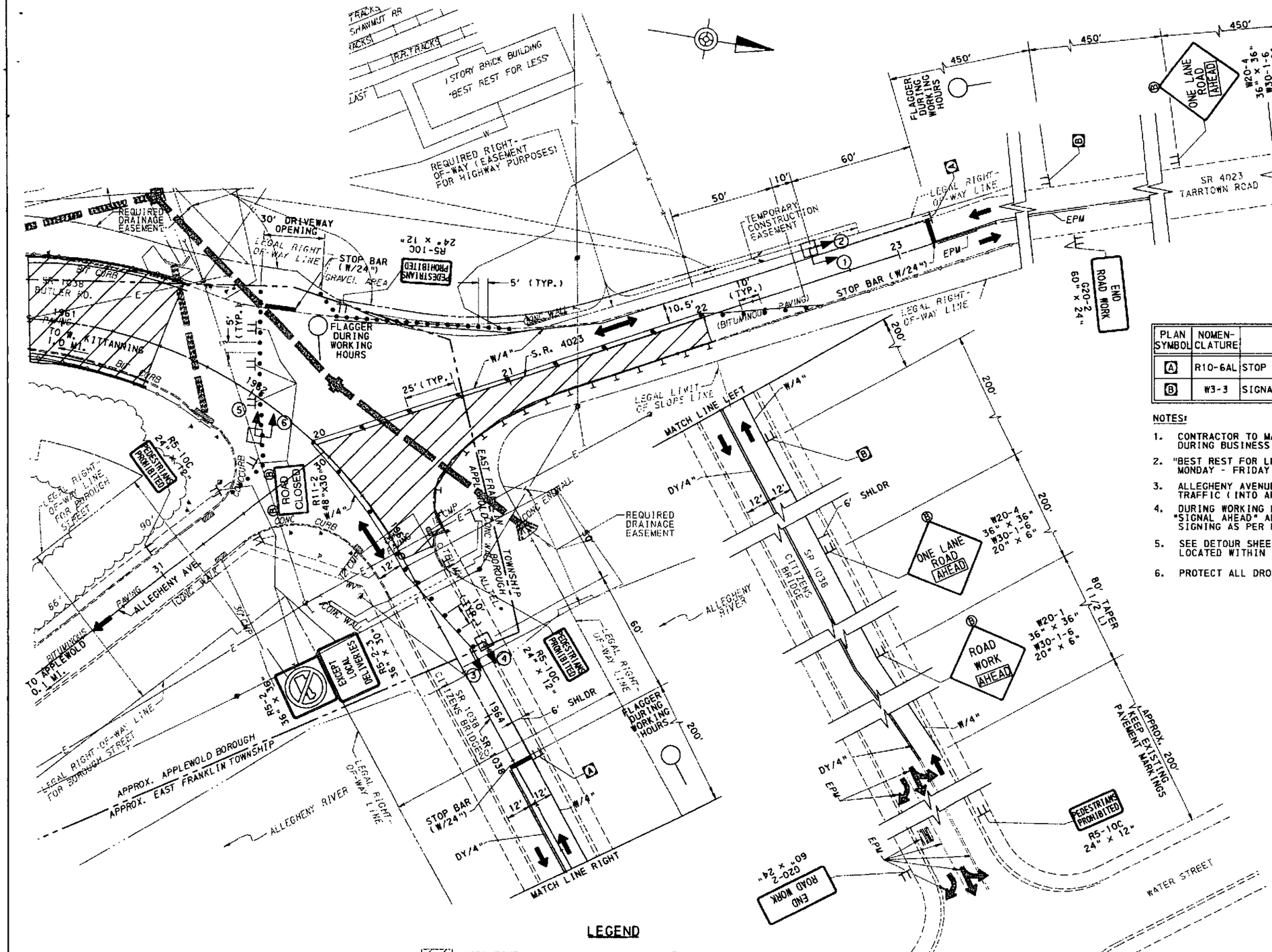

SIGNS

PLAN SYMBOL	NOMEN-CLATURE	DESCRIPTION	SIZE	QUANT.
A	R10-6AL	STOP HERE ON RED	24"x30"	2
B	W3-3	SIGNAL AHEAD	36"x36"	2

NOTES:

1. CONTRACTOR TO MAINTAIN ACCESS TO "BEST REST FOR LESS" DURING BUSINESS WORKING HOURS.
2. "BEST REST FOR LESS" WORKING HOURS: MONDAY - FRIDAY 12:00 PM TO 5:00 PM; SATURDAY 9:00 AM TO 3:00 PM
3. ALLEGHENY AVENUE RESTRICTED TO ONE WAY TRAFFIC (INTO APPLEWOLD) DURING CONSTRUCTION.
4. DURING WORKING HOURS WHEN FLAGGERS ARE PRESENT, COVER W3-3 "SIGNAL AHEAD" AND R10-6AL "STOP HERE ON RED" SIGNS AND PROVIDE SIGNING AS PER PUB. 213, FIG. PATA 10b, INTERSECTION FLAGGING.
5. SEE DETOUR SHEETS 11-14 FOR ADDITIONAL DETOUR SIGNING TO BE LOCATED WITHIN THESE WORKING LIMITS.
6. PROTECT ALL DROPOFF CONDITIONS IN ACCORDANCE WITH PUB. 408/2007.

A-00122496

SCALE
25 FEET 0 25 FEET

LEGEND

	WORK ZONE		TYPE B LIGHT
	DIRECTION OF TRAVEL	W/4"	SOLID WHITE LINE/WIDTH
	VERTICAL PANEL	DY/4"	DOUBLE SOLID YELLOW LINE/WIDTH
	TYPE III BARRICADE	EPM	EXISTING PAVEMENT MARKINGS
	FLAGGER ON DUTY (DURING WORKING HOURS)		PORTABLE TEMPORARY TRAFFIC SIGNAL

DRAWN BY	CJC
CHECKED BY	KDF

TRAFFIC CONTROL PLAN
STAGE 2

COMMONWEALTH OF PENNSYLVANIA
REGISTERED PROFESSIONAL
CHRISTOPHER JAMES CAVANAH
ENGINEER

h:\projects\0432\tcp\plans\TCPLN01.dgn 7/11/2007

DISTRICT	COUNTY	ROUTE	SECTION	SHEET
10-0	ARMSTRONG	1038	150	5 OF 14
EAST FRANKLIN TWP., WEST KITTANNING & APPLEWOLD BORO.'S				

REVISION NUMBER	REVISIONS	DATE	BY

PHASING DIAGRAM

	Ø2				Ø4				Ø8				FLASHING
	INTERVALS				INTERVALS				INTERVALS				
SIGNALS	1	2	3		1	2	3		1	2	3		
1-2	G	Y	R		R	R	R		R	R	R		R
3-4	R	R	R		G	Y	R		R	R	R		R
5-6	R	R	R		R	R	R		G	Y	R		R
FIXED	X	3	27		X	3	27		X	3	17		
MINIMUM	10				10				5				
MAXIMUM	20				20				10				

PLACE ALL PORTABLE TEMPORARY TRAFFIC SIGNAL UNIT(S) ON STABILIZED LEVEL-GRADED LOCATIONS.

SIGNALS

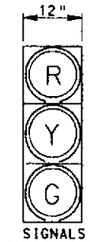

SIGNALS
(VEHICULAR)
1 - 2 - 3
4 - 5 - 6

EMERGENCY VEHICLE PREEMPTION NOTES:

1. THE PORTABLE TEMPORARY TRAFFIC SIGNAL UNIT(S) SHALL BE EQUIPPED WITH SIREN-ACTIVATED EMERGENCY VEHICLE PREEMPTION FOR THE EASTBOUND APPROACH OF THE DRIVEWAY AND WESTBOUND APPROACH OF SR 1038 (CITIZENS BRIDGE), AND THE SOUTHBOUND APPROACH OF SR 4023 (TARRTOWN ROAD), WITH AN INDICATOR LIGHT FOR EACH APPROACH. THE INDICATOR LIGHT SHALL CONSIST OF A WHITE FLOOD LIGHT, AND IT SHALL FLASH ONLY FOR THE APPROPRIATE APPROACH DURING THE GREEN INTERVAL IN THE PREEMPTION PHASE TO CONFIRM THAT THE EMERGENCY VEHICLE HAS CONTROL OF THE INTERSECTION. NO FAIL-SAFE INDICATION WILL BE GIVEN TO NON-PREEMPTED APPROACHES. IN CASE OF A FAILURE, THIS INDICATION SHALL NOT BE GIVEN WHETHER THE FAILURE RESULTS FROM A PRIOR PREEMPTION ON ANOTHER APPROACH, FROM EQUIPMENT MALFUNCTION, OR FROM ANY OTHER CAUSE.

2. UPON PREEMPTION BY EMERGENCY VEHICLE, A CHANGE INTERVAL SHALL BE PROVIDED TO CLEAR ALL CONFLICTING VEHICULAR INTERVALS. A GREEN INDICATION WILL BE GIVEN TO THE SELECTED PHASE AND RED INDICATIONS GIVEN TO ALL OTHER APPROACHES.

3. IF THE SIGNALS ARE FLASHING WHEN ACTIVATED BY AN EMERGENCY VEHICLE, ALL SIGNALS SHALL REMAIN FLASHING.

4. WHEN RETURNING TO NORMAL OPERATION UPON COMPLETION OF PREEMPTION PHASE THE SIGNAL WILL GO TO PHASE 2, INTERVAL 1.

5. EMERGENCY VEHICLES SHALL BE SERVED ON A "FIRST COME, FIRST SERVED" BASIS, UNLESS AN ALTERNATIVE METHOD OF OPERATION IS APPROVED BY PENNDOT. NO OTHER KINDS OR CLASSES OF VEHICLES SHALL BE PERMITTED TO PREEMPT THE TRAFFIC SIGNAL UNLESS APPROVED BY PENNDOT.

SIGNAL NOTES:

1. SIGNALS WILL OPERATE DURING NON-WORKING HOURS. WHEN FLAGGERS ARE PRESENT SIGNALS ARE TO BE MANUALLY PLACED ON FLASHING YELLOW.
2. IF SIGNAL GOES TO FLASH DURING NORMAL OPERATION, THE WORK ZONE MUST BE FLAGGED.
3. CONTRACTOR IS RESPONSIBLE FOR TIMING AND SIGNAL HEAD PLACEMENT ADJUSTMENTS DURING CONSTRUCTION, SUBJECT TO APPROVAL FROM DISTRICT TRAFFIC UNIT.
4. INSTALLATION, OPERATION, AND MAINTENANCE OF THIS TRAFFIC SIGNAL SHALL BE IN ACCORDANCE WITH PENNSYLVANIA DEPARTMENT OF TRANSPORTATION REGULATIONS ON OFFICIAL TRAFFIC CONTROL DEVICES.
5. NO MODIFICATION OF THIS INSTALLATION IS PERMITTED UNLESS PRIOR APPROVAL IS GRANTED, IN WRITING, BY PENNDOT.
6. ALL MAINTENANCE NECESSARY FOR PROPER VISIBILITY OF SIGNALS, INCLUDING TRIMMING TREES, IS THE RESPONSIBILITY OF THE PERMITTEE.
7. ALL SIGNS AND PAVEMENT MARKINGS INDICATED ON THIS DRAWING ARE CONSIDERED PART OF THE PERMIT AND SHALL BE INSTALLED AND MAINTAINED BY THE PERMITTEE, UNLESS OTHERWISE INDICATED, EXCEPT THE LONGITUDINAL PAVEMENT MARKINGS ON STATE HIGHWAYS, WHICH WILL BE MAINTAINED BY PENNDOT.
8. POST MOUNTED SIGNALS SHALL BE INSTALLED WITH THE SIGNAL HEADS A MINIMUM OF 2 FEET BEHIND THE FACE OF CURB OR EDGE OF SHOULDER. SUPPORT POLES FOR OVERHEAD SIGNALS SHALL ALSO HAVE A MINIMUM HORIZONTAL CLEARANCE OF 2 FEET.
9. THE BOTTOM OF SIGNAL HEADS AND SIGNS ERECTED OVER THE ROADWAY SHALL NOT BE LESS THAN 17 FEET OR MORE THAN 19 FEET ABOVE THE ROADWAY. THE BOTTOM OF POST MOUNTED SIGNAL HEADS SHALL NOT BE LESS THAN 10 FEET NOR MORE THAN 15 FEET ABOVE THE SIDEWALK OR PAVEMENT GRADE.
10. THE MINIMUM HORIZONTAL DISTANCE BETWEEN SIGNAL HEADS MEASURED AT RIGHT ANGLES TO THE APPROACH, SHALL BE 8 FEET.
11. PAVEMENT MARKING SHALL BE PLACED IN ACCORDANCE WITH DEPARTMENT OF TRANSPORTATION PAVEMENT MARKING HANDBOOK.
12. PERMITTEE IS RESPONSIBLE FOR OBTAINING APPROVAL FOR INSTALLATION OF TRAFFIC CONTROL DEVICES LOCATED OUTSIDE HIGHWAY RIGHT-OF-WAY.
13. ANY FIELD ADJUSTMENT OF STOP BARS REQUIRES NEW CALCULATION OF CLEARANCE INTERVALS IN ACCORDANCE WITH PENNDOT SPECIFICATIONS.
14. CONTRACTOR IS RESPONSIBLE FOR OBTAINING THE APPLICATION FOR PERMIT TO OPERATE PORTABLE TRAFFIC CONTROL SIGNALS (TE-952P).
15. FINAL PLACEMENT OF PORTABLE TRAFFIC SIGNALS MUST BE APPROVED BY THE DISTRICT TRAFFIC ENGINEER OR A REPRESENTATIVE OF THE DISTRICT TRAFFIC UNIT.

A-00122496

COMMONWEALTH OF PENNSYLVANIA REGISTERED PROFESSIONAL CHRISTOPHER AMES CAVANAH ENGINEER

DRAWN BY	CJC
CHECKED BY	KDF

TRAFFIC CONTROL PLAN
STAGE 2

DISTRICT	COUNTY	ROUTE	SECTION	SHEET
10-0	ARMSTRONG	1038	150	6 OF 14

EAST FRANKLIN TWP., WEST KITTANNING & APPLEWOLD BORO.'S

REVISION NUMBER	REVISIONS	DATE	BY

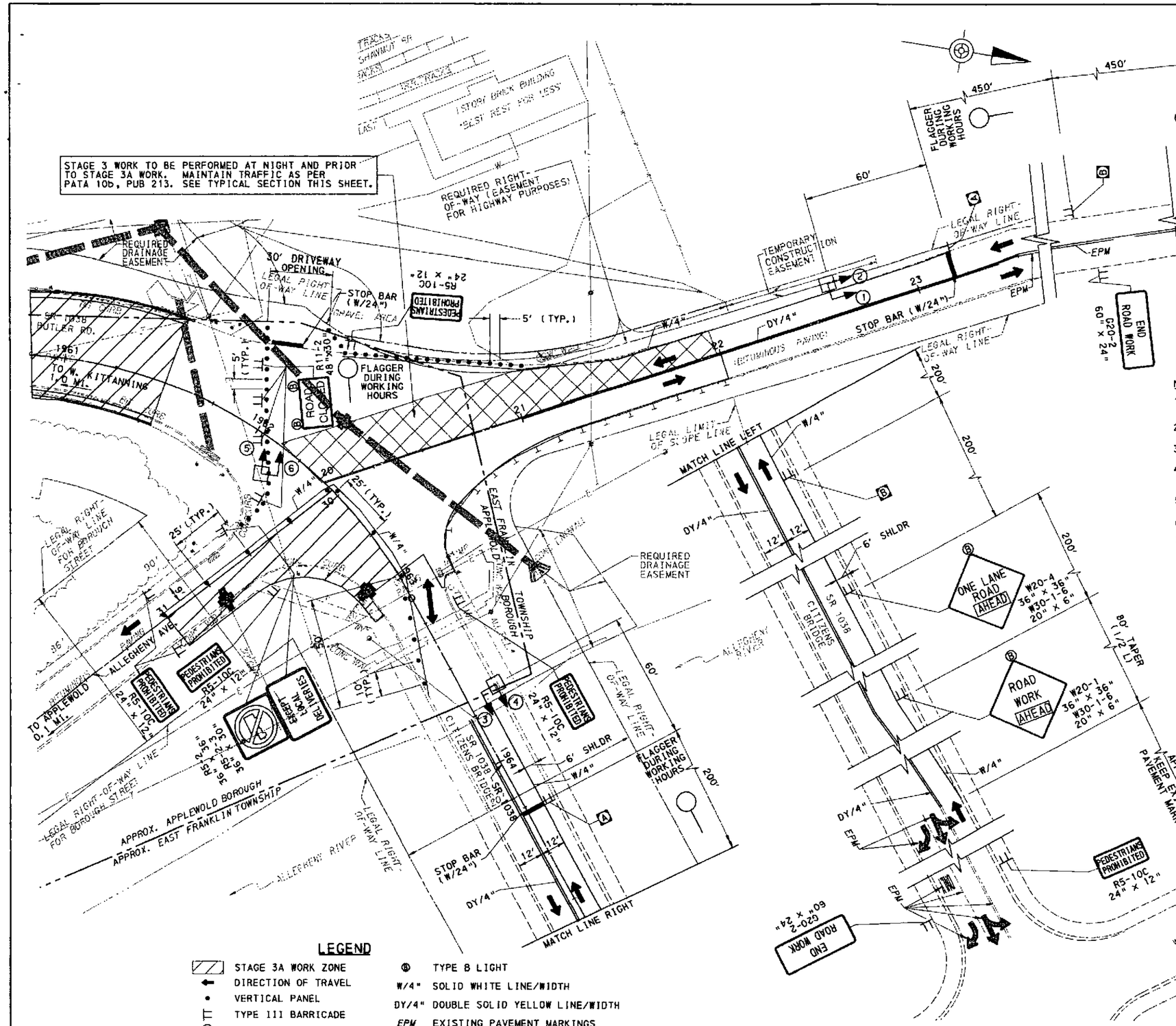

SIGNS

PLAN SYMBOL	NOMEN-CLATURE	DESCRIPTION	SIZE	QUANT.
A	R10-6AL	STOP HERE ON RED	24"x30"	2
B	W3-3	SIGNAL AHEAD	36"x36"	2

NOTES:

1. CONTRACTOR TO MAINTAIN ACCESS TO "BEST REST FOR LESS" DURING BUSINESS WORKING HOURS.
2. "BEST REST FOR LESS" WORKING HOURS: MONDAY - FRIDAY 12:00 PM TO 5:00 PM; SATURDAY 9:00 AM TO 3:00 PM
3. ALLEGHENY AVENUE RESTRICTED TO ONE WAY TRAFFIC (INTO APPLEWOLD) DURING CONSTRUCTION.
4. DURING WORKING HOURS WHEN FLAGGERS ARE PRESENT, COVER W3-3 "SIGNAL AHEAD" AND R10-6AL "STOP HERE ON RED" SIGNS AND PROVIDE SIGNING AS PER PUB. 213, FIG. PATA 10b, INTERSECTION FLAGGING.
5. SEE DETOUR SHEETS 11-14 FOR ADDITIONAL DETOUR SIGNING TO BE LOCATED WITHIN THESE WORKING LIMITS.
6. PROTECT ALL DROPOFF CONDITIONS IN ACCORDANCE WITH PUB. 408/2007.
7. USE MILLING OF BIT. PAVEMENT, VARIABLE DEPTH, OR BIT. BINDER COURSE, VARIABLE DEPTH, TO LEVEL THE HEIGHT DIFFERENCE BETWEEN PAVEMENT CONSTRUCTED IN STAGE 2 AND EXISTING PAVEMENT.

LEGEND

- STAGE 3A WORK ZONE
- DIRECTION OF TRAVEL
- VERTICAL PANEL
- TYPE III BARRICADE
- FLAGGER ON DUTY (DURING WORKING HOURS)
- STAGE 3 WORK, PERFORMED AT NIGHT AND PRIOR TO STAGE 3A WORK, SEE NOTE 7
- TYPE B LIGHT
- W/4" SOLID WHITE LINE/WIDTH
- DY/4" DOUBLE SOLID YELLOW LINE/WIDTH
- EPM EXISTING PAVEMENT MARKINGS
- PORTABLE TEMPORARY TRAFFIC SIGNAL

SCALE
25 FEET 0 25 FEET

A-00122496

DRAWN BY	CJC
CHECKED BY	KDF

TRAFFIC CONTROL PLAN
STAGE 3 AND STAGE 3A

COMMONWEALTH OF PENNSYLVANIA REGISTERED PROFESSIONAL CHRISTOPHER JAMES CAVANAH ENGINEER

h:\projects\0432\tcp\plans\TCPLN02.dgn 7/11/2007

DISTRICT	COUNTY	ROUTE	SECTION	SHEET
10-0	ARMSTRONG	1038	150	7 OF 14
EAST FRANKLIN TWP., WEST KITTANNING & APPLEWOLD BORO.'S				

REVISION NUMBER	REVISIONS	DATE	BY

PHASING DIAGRAM

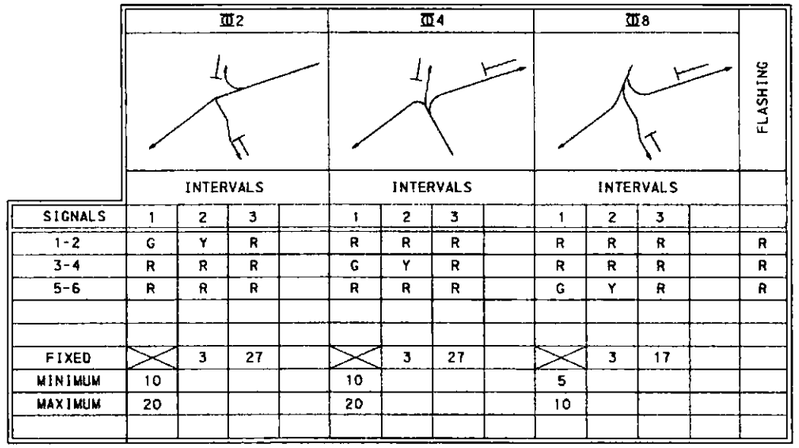

SIGNALS	1	2	3		1	2	3		1	2	3		
1-2	G	Y	R		R	R	R		R	R	R		R
3-4	R	R	R		G	Y	R		R	R	R		R
5-6	R	R	R		R	R	R		G	Y	R		R
FIXED	X	3	27		X	3	27		X	3	17		
MINIMUM	10				10				5				
MAXIMUM	20				20				10				

PLACE ALL PORTABLE TEMPORARY TRAFFIC SIGNAL UNIT(S) ON STABILIZED LEVEL-GRADED LOCATIONS.

EMERGENCY VEHICLE PREEMPTION NOTE:

1. THE PORTABLE TEMPORARY TRAFFIC SIGNAL UNIT(S) SHALL BE EQUIPPED WITH SIREN-ACTIVATED EMERGENCY VEHICLE PREEMPTION FOR THE EASTBOUND APPROACH OF THE DRIVEWAY AND WESTBOUND APPROACH OF SR 1038 (CITIZENS BRIDGE), AND THE SOUTHBOUND APPROACH OF SR 4023 (TARRTOWN ROAD), WITH AN INDICATOR LIGHT FOR EACH APPROACH. THE INDICATOR LIGHT SHALL CONSIST OF A WHITE FLOOD LIGHT, AND IT SHALL FLASH ONLY FOR THE APPROPRIATE APPROACH DURING THE GREEN INTERVAL IN THE PREEMPTION PHASE TO CONFIRM THAT THE EMERGENCY VEHICLE HAS CONTROL OF THE INTERSECTION. NO FAIL-SAFE INDICATION WILL BE GIVEN TO NON-PREEMPTED APPROACHES. IN CASE OF A FAILURE, THIS INDICATION SHALL NOT BE GIVEN WHETHER THE FAILURE RESULTS FROM A PRIOR PREEMPTION ON ANOTHER APPROACH, FROM EQUIPMENT MALFUNCTION, OR FROM ANY OTHER CAUSE.

2. UPON PREEMPTION BY EMERGENCY VEHICLE, A CHANGE INTERVAL SHALL BE PROVIDED TO CLEAR ALL CONFLICTING VEHICULAR INTERVALS. A GREEN INDICATION WILL BE GIVEN TO THE SELECTED PHASE AND RED INDICATIONS GIVEN TO ALL OTHER APPROACHES.

3. IF THE SIGNALS ARE FLASHING WHEN ACTIVATED BY AN EMERGENCY VEHICLE, ALL SIGNALS SHALL REMAIN FLASHING.

4. WHEN RETURNING TO NORMAL OPERATION UPON COMPLETION OF PREEMPTION PHASE THE SIGNAL WILL GO TO PHASE 2, INTERVAL 1.

5. EMERGENCY VEHICLES SHALL BE SERVED ON A "FIRST COME, FIRST SERVED" BASIS, UNLESS AN ALTERNATIVE METHOD OF OPERATION IS APPROVED BY PENNDOT. NO OTHER KINDS OR CLASSES OF VEHICLES SHALL BE PERMITTED TO PREEMPT THE TRAFFIC SIGNAL UNLESS APPROVED BY PENNDOT.

SIGNALS

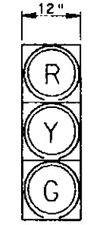

SIGNALS (VEHICULAR)
1 - 2 - 3
4 - 5 - 6

SIGNAL NOTES:

1. SIGNALS WILL OPERATE DURING NON-WORKING HOURS. WHEN FLAGGERS ARE PRESENT SIGNALS ARE TO BE MANUALLY PLACED ON FLASHING YELLOW.
2. IF SIGNAL GOES TO FLASH DURING NORMAL OPERATION, THE WORK ZONE MUST BE FLAGGED.
3. CONTRACTOR IS RESPONSIBLE FOR TIMING AND SIGNAL HEAD PLACEMENT ADJUSTMENTS DURING CONSTRUCTION, SUBJECT TO APPROVAL FROM DISTRICT TRAFFIC UNIT.
4. INSTALLATION, OPERATION, AND MAINTENANCE OF THIS TRAFFIC SIGNAL SHALL BE IN ACCORDANCE WITH PENNSYLVANIA DEPARTMENT OF TRANSPORTATION REGULATIONS ON OFFICIAL TRAFFIC CONTROL DEVICES.
5. NO MODIFICATION OF THIS INSTALLATION IS PERMITTED UNLESS PRIOR APPROVAL IS GRANTED, IN WRITING, BY PENNDOT.
6. ALL MAINTENANCE NECESSARY FOR PROPER VISIBILITY OF SIGNALS, INCLUDING TRIMMING TREES, IS THE RESPONSIBILITY OF THE PERMITTEE.
7. ALL SIGNS AND PAVEMENT MARKINGS INDICATED ON THIS DRAWING ARE CONSIDERED PART OF THE PERMIT AND SHALL BE INSTALLED AND MAINTAINED BY THE PERMITTEE, UNLESS OTHERWISE INDICATED, EXCEPT THE LONGITUDINAL PAVEMENT MARKINGS ON STATE HIGHWAYS, WHICH WILL BE MAINTAINED BY PENNDOT.
8. POST MOUNTED SIGNALS SHALL BE INSTALLED WITH THE SIGNAL HEADS A MINIMUM OF 2 FEET BEHIND THE FACE OF CURB OR EDGE OF SHOULDER. SUPPORT POLES FOR OVERHEAD SIGNALS SHALL ALSO HAVE A MINIMUM HORIZONTAL CLEARANCE OF 2 FEET.
9. THE BOTTOM OF SIGNAL HEADS AND SIGNS ERECTED OVER THE ROADWAY SHALL NOT BE LESS THAN 17 FEET OR MORE THAN 19 FEET ABOVE THE ROADWAY. THE BOTTOM OF POST MOUNTED SIGNAL HEADS SHALL NOT BE LESS THAN 10 FEET NOR MORE THAN 15 FEET ABOVE THE SIDEWALK OR PAVEMENT GRADE.
10. THE MINIMUM HORIZONTAL DISTANCE BETWEEN SIGNAL HEADS MEASURED AT RIGHT ANGLES TO THE APPROACH, SHALL BE 8 FEET.
11. PAVEMENT MARKING SHALL BE PLACED IN ACCORDANCE WITH DEPARTMENT OF TRANSPORTATION PAVEMENT MARKING HANDBOOK.
12. PERMITTEE IS RESPONSIBLE FOR OBTAINING APPROVAL FOR INSTALLATION OF TRAFFIC CONTROL DEVICES LOCATED OUTSIDE HIGHWAY RIGHT-OF-WAY.
13. ANY FIELD ADJUSTMENT OF STOP BARS REQUIRES NEW CALCULATION OF CLEARANCE INTERVALS IN ACCORDANCE WITH PENNDOT SPECIFICATIONS.
14. CONTRACTOR IS RESPONSIBLE FOR OBTAINING THE APPLICATION FOR PERMIT TO OPERATE PORTABLE TRAFFIC CONTROL SIGNALS (TE-952P).
15. FINAL PLACEMENT OF PORTABLE TRAFFIC SIGNALS MUST BE APPROVED BY THE DISTRICT TRAFFIC ENGINEER OR A REPRESENTATIVE OF THE DISTRICT TRAFFIC UNIT.

A-00122496

DRAWN BY	CJC
CHECKED BY	KDF

TRAFFIC CONTROL PLAN
STAGE 3

R:\projects\3432\top\plans\TCPR02a.dgn 7/11/2007

DISTRICT	COUNTY	ROUTE	SECTION	SHEET
10-0	ARMSTRONG	1038	150	8 OF 14
EAST FRANKLIN TWP., WEST KITTANNING & APPLEWOLD BORO.'S				

REVISION NUMBER	REVISIONS	DATE	BY

SIGNS

PLAN SYMBOL	NOMEN-CLATURE	DESCRIPTION	SIZE	QUANT.
A	R10-6AL	STOP HERE ON RED	24"x30"	2
B	W3-3	SIGNAL AHEAD	36"x36"	2

NOTES:

1. CONTRACTOR TO MAINTAIN ACCESS TO "BEST REST FOR LESS" DURING BUSINESS WORKING HOURS.
2. "BEST REST FOR LESS" WORKING HOURS: MONDAY - FRIDAY 12:00 PM TO 5:00 PM; SATURDAY 9:00 AM TO 3:00 PM
3. ALLEGHENY AVENUE RESTRICTED TO ONE WAY TRAFFIC (INTO APPLEWOLD) DURING CONSTRUCTION.
4. DURING WORKING HOURS WHEN FLAGGERS ARE PRESENT, COVER W3-3 "SIGNAL AHEAD" AND R10-6AL "STOP HERE ON RED" SIGNS AND PROVIDE SIGNING AS PER PUB. 213, FIG. PATA 10b, INTERSECTION FLAGGING.
5. SEE DETOUR SHEETS 11-14 FOR ADDITIONAL DETOUR SIGNING TO BE LOCATED WITHIN THESE WORKING LIMITS.
6. PROTECT ALL DROPOFF CONDITIONS IN ACCORDANCE WITH PUB. 408/2007.

LEGEND

- WORK ZONE
- DIRECTION OF TRAVEL
- VERTICAL PANEL
- TYPE III BARRICADE
- FLAGGER ON DUTY (DURING WORKING HOURS)
- TYPE B LIGHT
- W/4" SOLID WHITE LINE/WIDTH
- DY/4" DOUBLE SOLID YELLOW LINE/WIDTH
- EPM EXISTING PAVEMENT MARKINGS
- PORTABLE TEMPORARY TRAFFIC SIGNAL

SCALE
25 FEET 0 25 FEET

A-00122496

DRAWN BY	CJC
CHECKED BY	KDF

TRAFFIC CONTROL PLAN
STAGE 4

COMMONWEALTH OF PENNSYLVANIA
CHRISTOPHER JAMES CAVANAH
PROFESSIONAL ENGINEER

H:\projects\0432\tcp\plans\TCPLN03.dgn 7/17/2007

DISTRICT	COUNTY	ROUTE	SECTION	SHEET
10-0	ARMSTRONG	1038	150	9 OF 14

EAST FRANKLIN TWP., WEST KITTANNING & APPLEWOLD BORO.'S

REVISION NUMBER	REVISIONS	DATE	BY

PHASING DIAGRAM

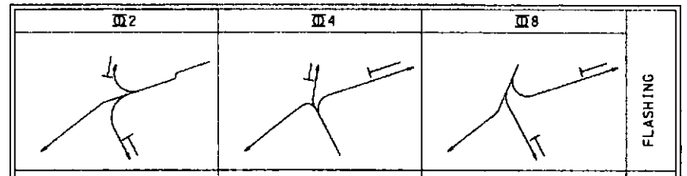

SIGNALS	INTERVALS 1	2	3		INTERVALS 1	2	3		INTERVALS 1	2	3		FLASHING
1-2	G	Y	R		R	R	R		R	R	R		R
3-4	R	R	R		G	Y	R		R	R	R		R
5-6	R	R	R		R	R	R		G	Y	R		R
FIXED	X	3	27		X	3	27		X	3	17		
MINIMUM	10				10				5				
MAXIMUM	20				20				10				

PLACE ALL PORTABLE TEMPORARY TRAFFIC SIGNAL UNIT(S) ON STABILIZED LEVEL-GRADED LOCATIONS.

EMERGENCY VEHICLE PREEMPTION NOTES:

1. THE PORTABLE TEMPORARY TRAFFIC SIGNAL UNIT(S) SHALL BE EQUIPPED WITH SIREN-ACTIVATED EMERGENCY VEHICLE PREEMPTION FOR THE EASTBOUND APPROACH OF THE DRIVEWAY AND WESTBOUND APPROACH OF SR 1038 (CITIZENS BRIDGE), AND THE SOUTHBOUND APPROACH OF SR 4023 (TARRTOWN ROAD), WITH AN INDICATOR LIGHT FOR EACH APPROACH. THE INDICATOR LIGHT SHALL CONSIST OF A WHITE FLOOD LIGHT, AND IT SHALL FLASH ONLY FOR THE APPROPRIATE APPROACH DURING THE GREEN INTERVAL IN THE PREEMPTION PHASE TO CONFIRM THAT THE EMERGENCY VEHICLE HAS CONTROL OF THE INTERSECTION. NO FAIL-SAFE INDICATION WILL BE GIVEN TO NON-PREEMPTED APPROACHES. IN CASE OF A FAILURE, THIS INDICATION SHALL NOT BE GIVEN WHETHER THE FAILURE RESULTS FROM A PRIOR PREEMPTION ON ANOTHER APPROACH, FROM EQUIPMENT MALFUNCTION, OR FROM ANY OTHER CAUSE.

2. UPON PREEMPTION BY EMERGENCY VEHICLE, A CHANGE INTERVAL SHALL BE PROVIDED TO CLEAR ALL CONFLICTING VEHICULAR INTERVALS. A GREEN INDICATION WILL BE GIVEN TO THE SELECTED PHASE AND RED INDICATIONS GIVEN TO ALL OTHER APPROACHES.

3. IF THE SIGNALS ARE FLASHING WHEN ACTIVATED BY AN EMERGENCY VEHICLE, ALL SIGNALS SHALL REMAIN FLASHING.

4. WHEN RETURNING TO NORMAL OPERATION UPON COMPLETION OF PREEMPTION PHASE THE SIGNAL WILL GO TO PHASE 2, INTERVAL 1.

5. EMERGENCY VEHICLES SHALL BE SERVED ON A "FIRST COME, FIRST SERVED" BASIS, UNLESS AN ALTERNATIVE METHOD OF OPERATION IS APPROVED BY PENNDOT. NO OTHER KINDS OR CLASSES OF VEHICLES SHALL BE PERMITTED TO PREEMPT THE TRAFFIC SIGNAL UNLESS APPROVED BY PENNDOT.

SIGNALS

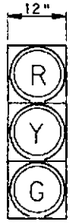

SIGNALS (VEHICULAR)

1 - 2 - 3
4 - 5 - 6

SIGNAL NOTES:

1. SIGNALS WILL OPERATE DURING NON-WORKING HOURS. WHEN FLAGGERS ARE PRESENT SIGNALS ARE TO BE MANUALLY PLACED ON FLASHING YELLOW.
2. IF SIGNAL GOES TO FLASH DURING NORMAL OPERATION, THE WORK ZONE MUST BE FLAGGED.
3. CONTRACTOR IS RESPONSIBLE FOR TIMING AND SIGNAL HEAD PLACEMENT ADJUSTMENTS DURING CONSTRUCTION, SUBJECT TO APPROVAL FROM DISTRICT TRAFFIC UNIT.
4. INSTALLATION, OPERATION, AND MAINTENANCE OF THIS TRAFFIC SIGNAL SHALL BE IN ACCORDANCE WITH PENNSYLVANIA DEPARTMENT OF TRANSPORTATION REGULATIONS ON OFFICIAL TRAFFIC CONTROL DEVICES.
5. NO MODIFICATION OF THIS INSTALLATION IS PERMITTED UNLESS PRIOR APPROVAL IS GRANTED, IN WRITING, BY PENNDOT.
6. ALL MAINTENANCE NECESSARY FOR PROPER VISIBILITY OF SIGNALS, INCLUDING TRIMMING TREES, IS THE RESPONSIBILITY OF THE PERMITTEE.
7. ALL SIGNS AND PAVEMENT MARKINGS INDICATED ON THIS DRAWING ARE CONSIDERED PART OF THE PERMIT AND SHALL BE INSTALLED AND MAINTAINED BY THE PERMITTEE, UNLESS OTHERWISE INDICATED, EXCEPT THE LONGITUDINAL PAVEMENT MARKINGS ON STATE HIGHWAYS, WHICH WILL BE MAINTAINED BY PENNDOT.
8. POST MOUNTED SIGNALS SHALL BE INSTALLED WITH THE SIGNAL HEADS A MINIMUM OF 2 FEET BEHIND THE FACE OF CURB OR EDGE OF SHOULDER. SUPPORT POLES FOR OVERHEAD SIGNALS SHALL ALSO HAVE A MINIMUM HORIZONTAL CLEARANCE OF 2 FEET.
9. THE BOTTOM OF SIGNAL HEADS AND SIGNS ERECTED OVER THE ROADWAY SHALL NOT BE LESS THAN 17 FEET OR MORE THAN 19 FEET ABOVE THE ROADWAY. THE BOTTOM OF POST MOUNTED SIGNAL HEADS SHALL NOT BE LESS THAN 10 FEET NOR MORE THAN 15 FEET ABOVE THE SIDEWALK OR PAVEMENT GRADE.
10. THE MINIMUM HORIZONTAL DISTANCE BETWEEN SIGNAL HEADS MEASURED AT RIGHT ANGLES TO THE APPROACH, SHALL BE 8 FEET.
11. PAVEMENT MARKING SHALL BE PLACED IN ACCORDANCE WITH DEPARTMENT OF TRANSPORTATION PAVEMENT MARKING HANDBOOK.
12. PERMITTEE IS RESPONSIBLE FOR OBTAINING APPROVAL FOR INSTALLATION OF TRAFFIC CONTROL DEVICES LOCATED OUTSIDE HIGHWAY RIGHT-OF-WAY.
13. ANY FIELD ADJUSTMENT OF STOP BARS REQUIRES NEW CALCULATION OF CLEARANCE INTERVALS IN ACCORDANCE WITH PENNDOT SPECIFICATIONS.
14. CONTRACTOR IS RESPONSIBLE FOR OBTAINING THE APPLICATION FOR PERMIT TO OPERATE PORTABLE TRAFFIC CONTROL SIGNALS (TE-952P).
15. FINAL PLACEMENT OF PORTABLE TRAFFIC SIGNALS MUST BE APPROVED BY THE DISTRICT TRAFFIC ENGINEER OR A REPRESENTATIVE OF THE DISTRICT TRAFFIC UNIT.

A-00122496

DRAWN BY	CJC
CHECKED BY	KDF

TRAFFIC CONTROL PLAN
STAGE 4

H:\projects\0432\tcp\plans\TCPLN03a.dgn 7/11/2007

DISTRICT	COUNTY	ROUTE	SECTION	SHEET
10-0	ARMSTRONG	1038	150	10 OF 14

EAST FRANKLIN TWP., WEST KITTANNING & APPLEWOLD BORO.'S

REVISION NUMBER	REVISIONS	DATE	BY

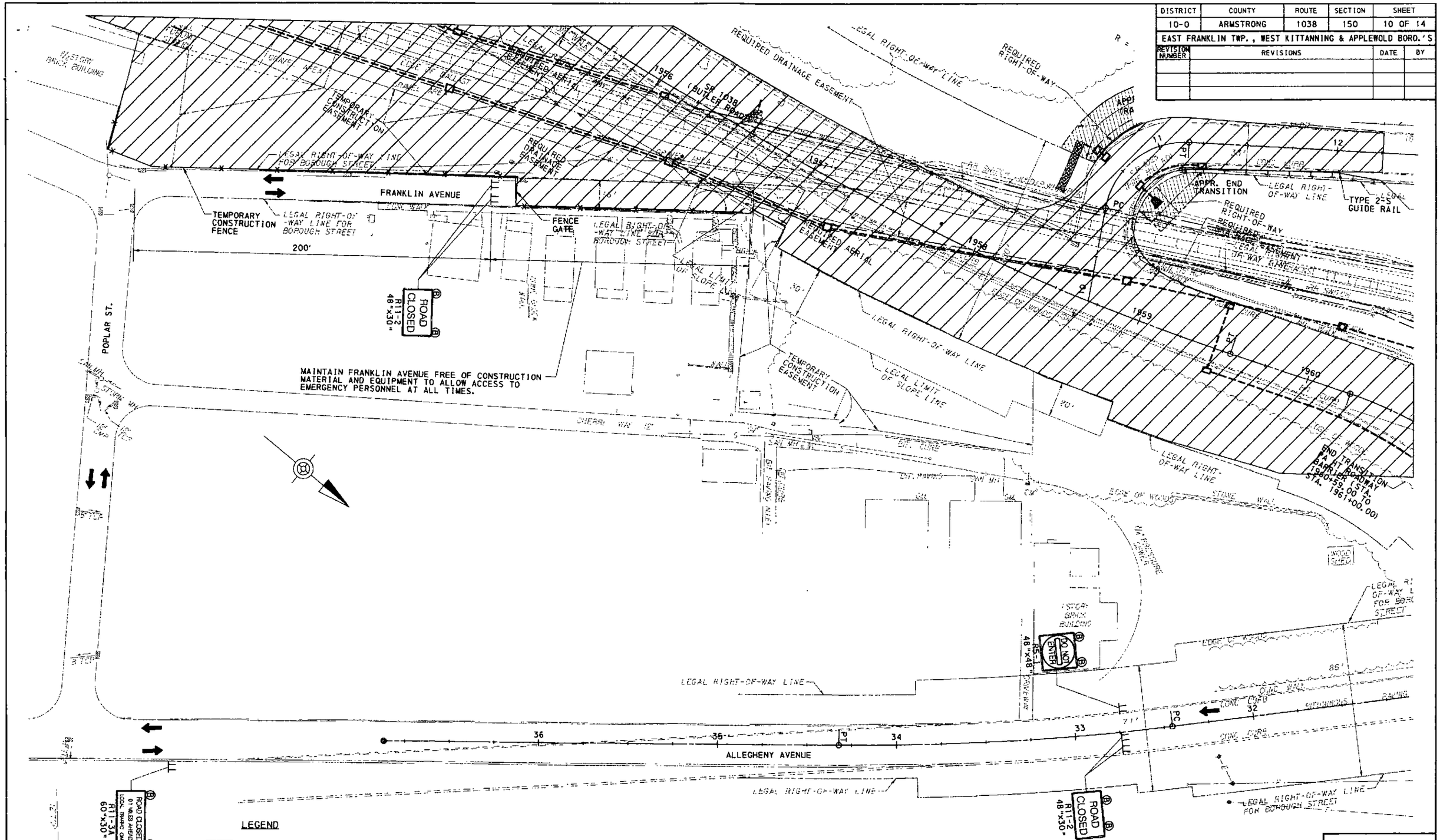

LEGEND

- WORK ZONE
- DIRECTION OF TRAVEL
- TYPE III BARRICADE
- TYPE B LIGHT
- TEMPORARY CONSTRUCTION FENCE

A-00122496

SCALE
25 FEET 0 25 FEET

TRAFFIC CONTROL PLAN
STAGES 2-4

DRAWN BY	CJC
CHECKED BY	KDF

COMMONWEALTH OF PENNSYLVANIA
REGISTERED PROFESSIONAL
CHRISTOPHER JAMES CAVANAH
ENGINEER

DISTRICT	COUNTY	ROUTE	SECTION	SHEET
10-0	ARMSTRONG	1038	150	11 OF 14

EAST FRANKLIN TWP., WEST KITTANNING & APPLEWOLD BORO.'S

REVISION NUMBER	REVISIONS	DATE	BY

FURNACE RUN
TARRTOWN
COWANSHANNOCK
SPACES CORNERS
WALKCHALK
EAST FRANKLIN TWP.
RAYBURN TWP.
WEST HILLS
TROY HILL
GRANDVIEW
KITTANNING BORO
PINE HILL
WEST KITTANNING BORO
APPLEWOLD BORO
GARRETTS RUN
SUNNYSIDE
GREEN ACRES
VALLEY TWP.
CENTER HILL
MCNEES
NORTH BUFFALO TWP.
MCHADDON
MANORVILLE
MANOR TWP.
MCGRANN
FORD CITY
KITTANNING TWP.

INDIANA UNIVERSITY OF PA ARMSTRONG CAMPUS

LEGEND

- WORK ZONE
- WORK ZONE (CONCURRENT WORK IN ADJACENT PROJECT BY OTHERS)
- TYPE III BARRICADE
- DIRECTION OF TRAVEL
- DETOUR ROUTE
- (00) SIGN IDENTIFIER, FOR SIGNS SEE SHEETS 10 AND 11

SCALE
NTS

TRAFFIC CONTROL PLAN
DETOUR STAGES 2-4

DRAWN BY	CJC
CHECKED BY	KDF

COMMONWEALTH OF PENNSYLVANIA REGISTERED PROFESSIONAL CHRISTOPHER JAMES CAVANAH

A-00122496

H:\projects\0432\top\plank\0a-PLN01.dgn 7/11/2007

DISTRICT	COUNTY	ROUTE	SECTION	SHEET
10-0	ARMSTRONG	1038	150	12 OF 14

EAST FRANKLIN TWP., WEST KITTANNING & APPLEWOLD BORO.'S

REVISION NUMBER	REVISIONS	DATE	BY

EAST FRANKLIN TWP

WEST KITTANNING BORO

KITTANNING BORO

APPLEWOLD BORO

RAYBURN TWP

NORTH BUFFALO TWP

MANOR TWP

WIBLE RD

HILL AVE

SIOUX AVE

WESTGATE DR

SOUTH PARK DR

HILLTOP PLAZA DR

CARTER AVE

NORTHERN AVE

S.R. 4023 TARRTOWN RD

S.R. 4025 PINE HILL RD

NORTH WATER ST

ARCH ST

NORTH GRANT ST

S.R. 1038 MARKET ST

SOUTH MCKEAN ST

MULBERRY ST

INDIANA AVE

WALNUT ST

S. WATER ST

CITIZENS BRIDGE

CENTRAL AVE

SOUTHERN AVE

GARFIELD ST

ARTHUR ST

CLEVELAND ST

1ST AVE

FRANKLIN AVE

ALLEGHENY AVE

RESIDENTIAL AVE

BRIAR HILL RD

S.R. 3017 KITTANNING FREEPORT RD

BELL TOP DR

S.R. 1038 BUTLER RD

S.R. 1422 INDIANA RD

S.R. 3003 LINDE RD

S.R. 3005 PONY FARM RD

SHADY LN

ROUNDTOP DR

BUNKER HILL RD

PITTSBURG & SHAWMUT RR

S.R. 3001 BUNKER HILL RD

ALLEGHENY RIVER

S.R. 2011 HILL ST

MAIN ST

BUFFINGTON DR

GARRETTS RUN RD

BUS 422

268

422

28

66

LEGEND

- WORK ZONE
- WORK ZONE (CONCURRENT WORK IN ADJACENT PROJECT BY OTHERS)
- TYPE III BARRICADE
- DIRECTION OF TRAVEL
- DETOUR ROUTE
- (00) SIGN IDENTIFIER, FOR SIGNS SEE SHEETS 10 AND 11
- EXISTING TRAFFIC SIGNAL TIMING TO BE MODIFED DURING DETOUR

NOTE:

ALLEGHENY AVENUE TO BE CONVERTED TO ONE WAY TRAFFIC (INTO APPLEWOLD) DURING DETOUR

SCALE
NTS

TRAFFIC CONTROL PLAN
DETOUR STAGES 2-4

DRAWN BY	CJC
CHECKED BY	KDF

COMMONWEALTH OF PENNSYLVANIA
PROFESSIONAL
CHRISTOPHER JAMES CAVANUH

A-00122496

H:\projects\0432\top\plans\DetPLN02.dgn 7/11/2007

DISTRICT	COUNTY	ROUTE	SECTION	SHEET
10-0	ARMSTRONG	1038	150	13 OF 14
EAST FRANKLIN TWP., WEST KITTANNING & APPLEWOLD BORO.'S				

REVISION NUMBER	REVISIONS	DATE	BY

(1) M4-8 30"x15" / M3-2 30"x15" / M4-3 30"x15" / M1-4 45"x36" / M6-2R 30"x18"

(2) M4-8 30"x15" / M3-2 30"x15" / M4-3 30"x15" / M1-4 45"x36" / M5-2R 30"x18"

(3) (B) ROAD CLOSED x MILES AHEAD LOCAL TRAFFIC ONLY (B) R11-3A 60"x30"

(4) (B) M3-2 30"x15" / M4-3 30"x15" / M1-4 45"x36" / W20-2 48"x48" / W30-1-3 30"X10"

(5) (B) M3-2 30"x15" / M4-3 30"x15" / M1-4 45"x36" / W20-2 48"x48" / W30-1-4 30"X10"

(6) (B) M3-4 30"x15" / M4-3 30"x15" / M1-4 45"x36" / W20-2 48"x48" / W30-1-3 30"X10"

(7) M4-8 30"x15" / M3-2 30"x15" / M4-3 30"x15" / M1-4 45"x36" / M6-3 30"x18"

(8) M4-8 24"x12" / M3-2 24"x12" / M4-3 24"x12" / M1-4 30"x24" / M6-1 21"x15"

(9) M4-8 24"x12" / M3-2 24"x12" / M4-3 24"x12" / M1-4 30"x24" / M5-1L 21"x15"

(10) (B) M3-2 24"x12" / M4-3 24"x12" / M1-4 30"x24" / W20-2 36"x36" / W30-1-3 20"x6"

(11) (B) M3-2 24"x12" / M4-3 24"x12" / M1-4 30"x24" / W20-2 36"x36" / W30-1-4 20"x6"

(12) M4-8 24"x12" / M3-2 24"x12" / M4-3 24"x12" / M1-4 30"x24" / M6-1 21"x15"

(13) M4-8 24"x12" / M3-2 24"x12" / M4-3 24"x12" / M1-4 30"x24" / M5-1R 21"x15"

(14) (B) ROAD CLOSED x MILES AHEAD LOCAL TRAFFIC ONLY DETOUR (B) R11-3A 60"x30" / M4-10R 36"x12"

(15) M4-8 24"x12" / M3-2 24"x12" / M4-3 24"x12" / M1-4 30"x24" / M5-2L 21"x15"

(16) M4-8 24"x12" / M3-2 24"x12" / M4-3 24"x12" / M1-4 30"x24" / M6-2L 21"x15"

(17) M4-9R 30"x24"

(18) M4-9L 30"x24"

(19) M4-9S 30"x24"

(20) (B) ROAD CLOSED DETOUR (B) R11-2 48"x30" / M4-10R 36"x12"

(21) (B) ROAD CLOSED (B) R11-2 48"x30"

(22) (B) ROAD CLOSED AHEAD W20-3 36"x36" / W30-1-6 20"x6"

(23) (B) M3-4 24"x12" / M4-3 24"x12" / M1-4 30"x24" / W20-2 36"x36" / W30-1-4 20"x6"

(24) (B) M3-4 24"x12" / M4-3 24"x12" / M1-4 30"x24" / W20-2 36"x36" / W30-1-3 20"x6"

(25) M4-8 24"x12" / M3-4 24"x12" / M4-3 24"x12" / M1-4 30"x24" / M6-1 21"x15"

(26) M4-8 24"x12" / M3-4 24"x12" / M4-3 24"x12" / M1-4 30"x24" / M5-1L 21"x15"

(27) M4-8 24"x12" / M3-4 24"x12" / M4-3 24"x12" / M1-4 30"x24" / M5-1R 21"x15"

(28) M4-8 24"x12" / M3-4 24"x12" / M4-3 24"x12" / M1-4 30"x24" / M6-1 21"x15"

(29) M4-8 24"x12" / M3-4 24"x12" / M4-3 24"x12" / M1-4 30"x24" / M6-3 21"x15"

(30) (B) ROAD CLOSED 500 FT W20-3 36"x36" / W30-1-1 20"x6"

(31) (B) ROAD CLOSED 1000 FT W20-3 36"x36" / W30-1-2 20"x6"

(32) END DETOUR M4-8A 24"x18"

(33) M4-8 24"x12" / M3-2 24"x12" / M4-3 24"x12" / M1-4 30"x24" / M6-3 21"x15"

(34) M4-8 24"x12" / M3-4 24"x12" / M4-3 24"x12" / M1-4 30"x24" / M6-2R 21"x15"

(35) M4-8 24"x12" / M3-4 24"x12" / M4-3 24"x12" / M1-4 30"x24" / M5-2R 21"x15"

(36) M4-8 24"x12" / M3-2 24"x12" / M4-3 24"x12" / M1-4 30"x24" / M6-2R 21"x15"

(37) M4-8 24"x12" / M3-2 24"x12" / M4-3 24"x12" / M1-4 30"x24" / M5-2R 21"x15"

(38) M4-8 30"x15" / M3-4 30"x15" / M4-3 30"x15" / M1-4 45"x36" / M6-3 30"x18"

(39) M4-8 30"x15" / M3-4 30"x15" / M4-3 30"x15" / M1-4 45"x36" / M6-2R 30"x18"

(40) M4-8 30"x15" / M3-4 30"x15" / M4-3 30"x15" / M1-4 45"x36" / M5-2R 30"x18"

(41) (B) ROAD CLOSED 1500 FT W20-3 36"x36" / W30-1-3 20"x6"

(42) (B) ROAD CLOSED 1/2 MILE W20-3 36"x36" / W30-1-4 20"x6"

A-00122496

LEGEND

(B) TYPE B FLASHER

TRAFFIC CONTROL PLAN
DETOUR STAGES 2-4

DRAWN BY	CJC
CHECKED BY	KDF

COMMONWEALTH OF PENNSYLVANIA REGISTERED PROFESSIONAL CHRISTOPHER JAMES CAVANAH ENGINEER

N:\projects\0432\top\plans\tcpstgntng.dgn 7/11/2007

DISTRICT	COUNTY	ROUTE	SECTION	SHEET
10-0	ARMSTRONG	1038	150	14 OF 14
EAST FRANKLIN TWP., WEST KITTANNING & APPLEWOLD BORO.'S				

REVISION NUMBER	REVISIONS	DATE	BY

S1

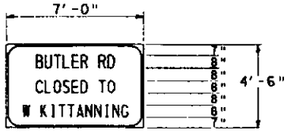

2" BORDER WITH 6" RADIUS
BACKGROUND- ORANGE REFLECTORIZED
LEGEND AND BORDER- BLACK NON-REFLECTORIZED

8" CAP. LET. SERIES D	8" CAP. LET. SERIES D	8" CAP. LET. SERIES D
12.3	12.3	4.9
7.3 - B	6.9 - C	7.0 - W
6.9 - U	6.4 - L	8.0 -
6.4 - T	7.1 - O	7.0 - K
6.4 - L	7.3 - S	2.8 - I
6.4 - E	6.4 - E	5.4 - T
5.4 - R	5.4 - D	5.4 - T
8.0	8.0	8.2 - A
7.3 - R	6.4 - T	7.3 - N
5.4 - D	5.6 - O	7.3 - N
12.2	12.2	3.1 - I
84.0	84.0	7.3 - N
		5.4 - G
		4.9
		84.0

S2

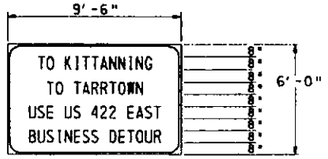

2" BORDER WITH 6" RADIUS
BACKGROUND- ORANGE REFLECTORIZED
LEGEND AND BORDER- BLACK NON-REFLECTORIZED

8" CAP. LET. SERIES D	8" CAP. LET. SERIES D	8" CAP. LET. SERIES D	8" CAP. LET. SERIES D
17.4	19.4	6.1	7.6
6.4 - T	6.4 - T	7.3 - U	7.3 - B
5.6 - O	5.6 - O	7.3 - S	7.3 - U
8.0 -	8.0 -	4.9 - E	7.3 - S
7.0 - K	5.4 - T	8.0 -	3.1 - I
2.8 - I	8.2 - A	7.3 - U	7.3 - N
5.4 - T	7.3 - R	5.4 - S	6.4 - E
5.4 - T	6.9 - R	8.0 -	6.9 - S
8.2 - A	6.4 - T	7.4 - 4	5.4 - S
7.3 - N	7.1 - O	6.9 - 2	8.0 -
7.3 - N	8.5 - W	5.4 - 2	7.3 - D
3.1 - I	5.4 - N	8.0 -	5.9 - E
7.3 - N	19.4	5.9 - E	6.4 - T
5.4 - G	114.0	8.2 - A	7.5 - O
17.4		6.9 - S	7.3 - U
114.0		4.9 - T	5.4 - R
		6.1	7.6
		114.0	114.0

S3

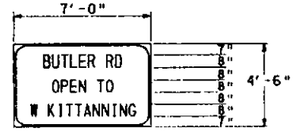

2" BORDER WITH 6" RADIUS
BACKGROUND- ORANGE REFLECTORIZED
LEGEND AND BORDER- BLACK NON-REFLECTORIZED

8" CAP. LET. SERIES D	8" CAP. LET. SERIES D	8" CAP. LET. SERIES D
12.3	18.7	4.9
7.3 - B	7.5 - O	7.0 - W
6.9 - U	7.3 - P	8.0 -
6.4 - T	6.4 - E	7.0 - K
6.4 - L	5.4 - N	2.8 - I
6.4 - E	8.0 -	5.4 - T
5.4 - R	6.4 - T	5.4 - T
8.0 -	5.6 - O	8.2 - A
7.3 - R	18.7	7.3 - N
5.4 - D	84.0	7.3 - N
12.2		3.1 - I
84.0		7.3 - N
		5.4 - G
		4.9
		84.0

S4

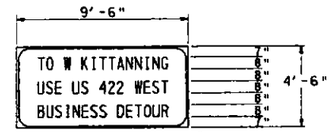

2" BORDER WITH 6" RADIUS
BACKGROUND- ORANGE REFLECTORIZED
LEGEND AND BORDER- BLACK NON-REFLECTORIZED

8" CAP. LET. SERIES D	8" CAP. LET. SERIES D	8" CAP. LET. SERIES D
9.9	5.7	7.6
6.4 - T	7.3 - U	7.3 - B
5.6 - O	7.3 - S	7.3 - U
8.0 -	4.9 - E	7.3 - S
7.0 - W	8.0 -	3.1 - I
8.0 -	7.3 - U	7.3 - N
7.0 - K	5.4 - S	6.4 - E
2.8 - I	8.0 -	6.9 - S
5.4 - T	7.4 - 4	5.4 - S
5.4 - T	6.9 - 2	8.0 -
8.2 - A	5.4 - 2	7.3 - D
7.3 - N	8.0 -	5.9 - E
7.3 - N	8.5 - W	6.4 - T
3.1 - I	6.4 - E	7.5 - O
7.3 - N	6.9 - S	7.3 - U
5.4 - G	4.9 - T	5.4 - R
9.9	5.7	7.6
114.0	114.0	114.0

S5

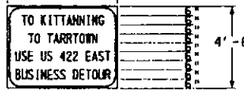

2" BORDER WITH 6" RADIUS
BACKGROUND- ORANGE REFLECTORIZED
LEGEND AND BORDER- BLACK NON-REFLECTORIZED

6" CAP. LET. SERIES C	6" CAP. LET. SERIES C	6" CAP. LET. SERIES C	6" CAP. LET. SERIES C
14.0	15.2	6.1	7.8
4.0 - T	4.0 - T	4.5 - U	4.5 - B
3.5 - O	3.5 - O	4.5 - S	4.5 - U
6.0 -	6.0 -	3.0 - E	4.5 - S
4.3 - K	3.3 - T	6.0 -	2.1 - I
1.9 - I	4.8 - A	4.5 - U	4.5 - N
3.3 - T	4.5 - R	3.3 - S	4.0 - E
3.3 - T	4.3 - R	6.0 -	4.3 - S
4.8 - A	4.0 - T	4.7 - 4	3.3 - S
4.5 - N	4.5 - O	4.3 - 2	6.0 -
4.5 - N	5.5 - W	3.3 - 2	4.5 - D
2.1 - I	3.3 - N	6.0 -	3.7 - E
4.5 - N	15.1	3.7 - E	4.0 - T
3.3 - G	78.0	4.8 - A	4.7 - O
14.0		4.3 - S	4.5 - U
78.0		3.0 - T	3.3 - R
		6.0	7.8
		78.0	78.0

S6

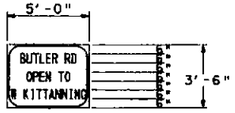

2" BORDER WITH 6" RADIUS
BACKGROUND- ORANGE REFLECTORIZED
LEGEND AND BORDER- BLACK NON-REFLECTORIZED

6" CAP. LET. SERIES C	6" CAP. LET. SERIES C	6" CAP. LET. SERIES C
11.1	15.0	6.5
4.5 - B	4.7 - O	4.5 - W
4.3 - U	4.5 - P	6.0 -
4.0 - T	4.0 - E	4.3 - K
4.0 - L	3.3 - N	1.9 - I
4.0 - E	6.0 -	3.3 - T
3.3 - R	4.0 - T	3.3 - T
6.0 -	3.5 - O	4.8 - A
4.5 - R	15.0	4.5 - N
3.3 - D	60.0	4.5 - N
11.0		2.1 - I
60.0		4.5 - N
		3.3 - G
		6.5
		60.0

S7

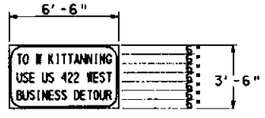

2" BORDER WITH 6" RADIUS
BACKGROUND- ORANGE REFLECTORIZED
LEGEND AND BORDER- BLACK NON-REFLECTORIZED

6" CAP. LET. SERIES C	6" CAP. LET. SERIES C	6" CAP. LET. SERIES C
8.8	5.6	7.8
4.0 - T	4.5 - U	4.5 - B
3.5 - O	4.5 - S	4.5 - U
6.0 -	3.0 - E	4.5 - S
4.5 - W	6.0 -	2.1 - I
6.0 -	4.5 - U	4.5 - N
4.3 - K	3.3 - S	4.0 - E
1.9 - I	6.0 -	4.3 - S
3.3 - T	4.7 - 4	3.3 - S
3.3 - T	4.3 - 2	6.0 -
4.8 - A	3.3 - 2	4.5 - D
4.5 - N	6.0 -	3.7 - E
4.5 - N	5.5 - W	4.0 - T
2.1 - I	4.0 - E	4.7 - O
4.5 - N	4.3 - S	4.5 - U
3.3 - G	3.0 - T	3.3 - R
8.7	5.5	7.8
78.0	78.0	78.0

S8

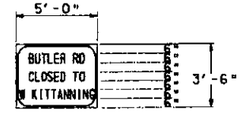

2" BORDER WITH 6" RADIUS
BACKGROUND- ORANGE REFLECTORIZED
LEGEND AND BORDER- BLACK NON-REFLECTORIZED

6" CAP. LET. SERIES C	6" CAP. LET. SERIES C	6" CAP. LET. SERIES C
11.1	11.0	6.5
4.5 - B	4.3 - C	4.5 - W
4.3 - U	4.0 - L	6.0 -
4.0 - T	4.5 - O	4.3 - K
4.0 - L	4.5 - S	1.9 - I
4.0 - E	4.0 - E	3.3 - T
3.3 - R	3.3 - D	3.3 - T
6.0 -	6.0	4.8 - A
4.5 - R	4.0 - T	4.5 - N
3.3 - D	3.5 - O	4.5 - N
11.0	10.9	2.1 - I
60.0	60.0	4.5 - N
		3.3 - G
		6.5
		60.0

A-00122496

DRAWN BY	CJC
CHECKED BY	KDF

TRAFFIC CONTROL PLAN
DETOUR STAGES 2-4

TABULATION OF PAVEMENT MARKING AND DELINEATOR ITEMS

0937 0106 GUIDE RAIL MOUNTED DELINEATOR TYPE B, (W/B) EACH	0937 0113 GUIDE RAIL MOUNTED DELINEATOR TYPE D, (W/B) EACH		0937 0202 BARRIER MOUNTED DELINEATOR, SIDE-MOUNT TYPE O, (Y/B) EACH	0937 0203 BARRIER MOUNTED DELINEATOR, SIDE-MOUNT TYPE O, (W/B) EACH	0937 0204 BARRIER MOUNTED DELINEATOR, TOP-MOUNT TYPE P, (Y/B) EACH	0937 0205 BARRIER MOUNTED DELINEATOR, TOP-MOUNT TYPE P, (W/B) EACH		0937 0310 FLEXIBLE DELINEATOR POST, SURFACE-MOUNT TYPE SM-2, WHITE POST WITH WHITE/BLANK SHEETING EACH	0937 0313 FLEXIBLE DELINEATOR POST, SURFACE-MOUNT TYPE SM-2, YELLOW POST WITH YELLOW/BLANK SHEETING EACH	0937 0333 FLEXIBLE DELINEATOR POST, GROUND-MOUNT TYPE GM-2, YELLOW POST WITH YELLOW/BLANK SHEETING EACH				0964 0001 4" WHITE EPOXY PAVEMENT MARKINGS LF	0964 0002 4" YELLOW EPOXY PAVEMENT MARKINGS LF	0964 0005 6" WHITE EPOXY PAVEMENT MARKINGS LF			0964 0021 24" WHITE EPOXY PAVEMENT MARKINGS LF	0964 0101 WHITE EPOXY LEGEND, "ONLY", 8'-0" EACH	0964 0224 WHITE EPOXY LEGEND, "LEFT ARROW", 12'-0" X 3'-0" EACH	0964 0226 WHITE EPOXY LEGEND, "THRU AND RIGHT ARROW", 20'-0" X 3'-7" EACH		SIDE	REMARKS	STATION	ROUTE
														393									RT. RT.		STA. 1948+25 RT. TO STA. 1952+14 RT.	SR 1038
															778								LT. ℄		STA. 1948+25 LT. TO STA. 1952+14 ℄	
														385		98							LT. LT.		STA. 1948+25 LT. TO STA. 1952+14 LT.	
														974									RT. RT.		STA. 1952+14 RT. TO STA. 1961+88 RT.	
														40									RT. RT.		STA. 1961+88 RT. TO STA. 1963+12.85 RT.	
																95							RT. RT.		STA. 1961+35 RT. TO STA. 1962+30 RT.	
															20								RT. RT.		STA. 1962+88 RT. TO STA. 1962+98 RT.	
								6	4						2032								℄ LT.		STA. 1952+14 ℄ TO STA. 1962+30 LT.	
																200							LT. LT.		STA. 1952+14 LT. TO STA. 1960+30 LT.	
														144		24							LT. LT.		STA. 1960+30 LT. TO STA. 1963+12.85 LT.	
														143							44		LT. LT.		STA. 1961+55 LT. TO STA. 20+80 LT. (SR4023)	
																10							LT. LT.		STA. 1962+88 LT. TO STA. 1962+98 LT.	
														586									LT. LT.		STA. 1952+14 LT. TO STA. 1958+00 LT.	
														80							39		LT. LT.		STA. 1958+00 LT. TO STA. 1959+14 LT.	
														388									LT. LT.		STA. 1959+14 LT. TO STA. 1962+41 LT.	
														198									RT. RT.		STA. 20+37.50 RT. TO STA. 22+00 RT.	SR 4023 TARRTOWN RD.
															336								℄ ℄		STA. 20+32 ℄ TO STA. 22+00 ℄	
														69							44		LT. LT.		STA. 20+12 LT. TO STA. 20+80 LT.	
														114									LT. LT.		STA. 21+03 LT. TO STA. 22+00 LT.	
																					13		LT.	STOP BAR	STA. 20+30 LT.	
2	2			9		9								216									RT. RT.		STA. 10+15 RT. TO STA. 12+26 RT.	SR 4025 PINE HILL RD.
14	14													1720									RT. RT.		STA. 12+26 RT. TO STA. 29+25 RT.	
			5		5									50							36		LT. LT.		STA. 10+24 LT. TO STA. 10+68 LT.	
			5		5					2					170								LT. LT.		STA. 10+68 LT. TO STA. 12+26 LT.	
										14					1720								LT. LT.		STA. 12+26 LT. TO STA. 29+25 LT.	
																					28		LT.	STOP BAR	STA. 30+25 LT.	ALLEGHENY STREET
														100									RT. RT.		STA. 30+32 RT. TO STA. 31+00 RT.	
															146								℄ ℄		STA. 30+27 ℄ TO STA. 31+00 ℄	
														120									LT. LT.		STA. 30+16 LT. TO STA. 31+00 LT.	
																						3	3	2			ENTIRE PROJECT	
16	16		10	9	10	9		6	4	16				5720	5202	427					204	3	3	2			TOTALS	

DISTRICT	COUNTY	ROUTE	SECTION	SHEET
10-0	ARMSTRONG	1038	150	1 OF 8
APPLEWOLD BOROUGH AND EAST FRANKLIN TOWNSHIP				

REVISION NUMBER	REVISIONS	DATE	BY

GENERAL NOTES - PAVEMENT MARKINGS AND DELINEATORS

INSTALL THESE PAVEMENT MARKINGS IN ACCORDANCE WITH THE FEDERAL HIGHWAY ADMINISTRATIONS "MANUAL ON UNIFORM TRAFFIC CONTROL DEVICES", LATEST EDITION.

MATERIAL AND WORKMANSHIP ARE TO BE IN ACCORDANCE WITH PUBLICATION 408, SPECIFICATIONS, 2007.

REFLECTORIZE ALL PAVEMENT MARKINGS.

RIGHT EDGE LINES SHALL BE SOLID WHITE, 4" WIDE AND PLACED 4" INSIDE THE EDGE OF TRAVELED WAY.

PROVIDE BROKEN LANE LINE SEGMENTS AT A 1 TO 3 RATIO OF STRIPE TO GAP. INSTALL 10 FOOT SEGMENT WITH 30 FOOT GAP. PROVIDE OVERALL PATTERN AT 40 FEET.

PROVIDE AUXILIARY LANE LINE SEGMENTS AT A 1 TO 4 RATIO OF STRIPE TO GAP. INSTALL 3 FOOT SEGMENT WITH 12 FOOT GAP. PROVIDE OVERALL PATTERN AT 15 FEET.

PROVIDE DOTTED EXTENSION LINE SEGMENTS AT A 1 TO 2 RATIO OF STRIPE TO GAP. INSTALL 2 FOOT SEGMENT WITH 4 FOOT GAP. PROVIDE OVERALL PATTERN AT 6 FEET.

APPLY ALL PAINTED CENTER LINES, LANE LINES, EDGE LINES AND LEGENDS AT 15 MILS WET THICKNESS.

CONSTRUCTION DETAILS OTHER THAN THOSE SHOWN ON THESE DRAWINGS MUST CONFORM TO THE FOLLOWING STANDARD DRAWING:

TC-8600 MAY 25, 2007
TC-8604 MAY 25, 2007

A-00122496

COMMONWEALTH OF PENNSYLVANIA — MICHAEL J. SMITH — PROFESSIONAL ENGINEER

Michael J. Smith

DRAWN BY	TLL
CHECKED BY	MJM

PAVEMENT MARKING AND DELINEATION PLAN

H:\PROJECTS\10432\Data Files\PMTAB01.dgn 7/10/2007

DISTRICT	COUNTY	ROUTE	SECTION	SHEET
10-D	ARMSTRONG	1038	150	2 OF 8
WEST KITTANNING BOROUGH AND EAST FRANKLIN TOWNSHIP				

REVISION NUMBER	REVISIONS	DATE	BY

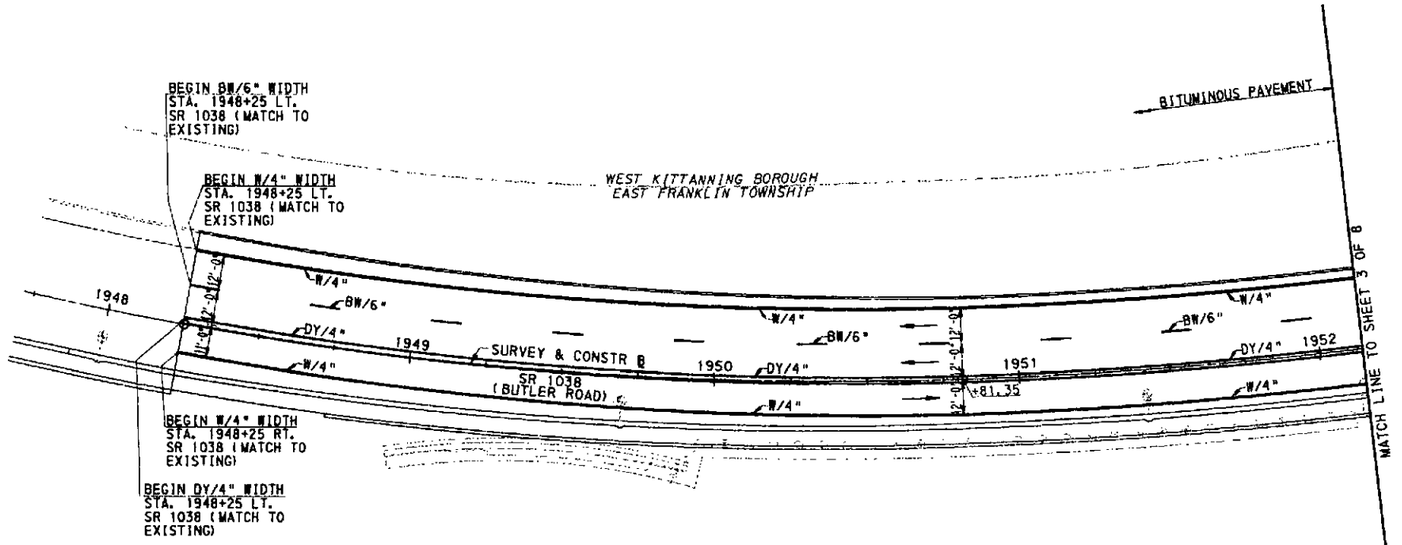

PAVEMENT MARKING LEGEND

PAVEMENT TYPE		
CONCRETE AND BITUMINOUS	W/4"	WHITE EPOXY PAVEMENT MARKING, 4" WIDTH
	W/6"	WHITE EPOXY PAVEMENT MARKING, 6" WIDTH
	BW/6"	WHITE EPOXY PAVEMENT MARKING, BROKEN LANE LINE, 6" WIDTH
	WD/4"	WHITE EPOXY PAVEMENT MARKING, DOTTED EXTENSION LINE, 4" WIDTH
	Y/4"	YELLOW EPOXY PAVEMENT MARKING, 4" WIDTH
	DY/4"	DOUBLE YELLOW EPOXY PAVEMENT MARKING, 4" WIDTH
	W/24"	WHITE EPOXY PAVEMENT MARKING, 24" WIDTH
	AW/6"	WHITE EPOXY PAVEMENT MARKING, AUXILIARY LANE LINE, 6" WIDTH
	ONLY	WHITE EPOXY LEGEND, "ONLY", 8'-0"
		WHITE EPOXY LEGEND, "LEFT ARROW", 12'-0"x3'-0"
		WHITE EPOXY LEGEND, "THRU AND RIGHT ARROW", 20'-0"x3'-7"
		DIRECTION OF TRAVEL
		PROPOSED HIGHWAY LIGHTING POLE, SHOWN FOR INFORMATION ONLY

A-00122496

DRAWN BY	TLL
CHECKED BY	MJM

SCALE
25 FEET 0 25 FEET

PAVEMENT MARKING AND DELINEATION PLAN

COMMONWEALTH OF PENNSYLVANIA
PROFESSIONAL
MICHAEL J. MUTH
ENGINEER

M:\Projects\0432\pavmrk\PMDLAN01.dgn 7/10/2001

*APPLEWOLD BOROUGH
WEST KITTANNING BOROUGH
EAST FRANKLIN TOWNSHIP

DISTRICT	COUNTY	ROUTE	SECTION	SHEET
10-0	ARMSTRONG	1038	150	3 OF 8

*

REVISION NUMBER	REVISIONS	DATE	BY

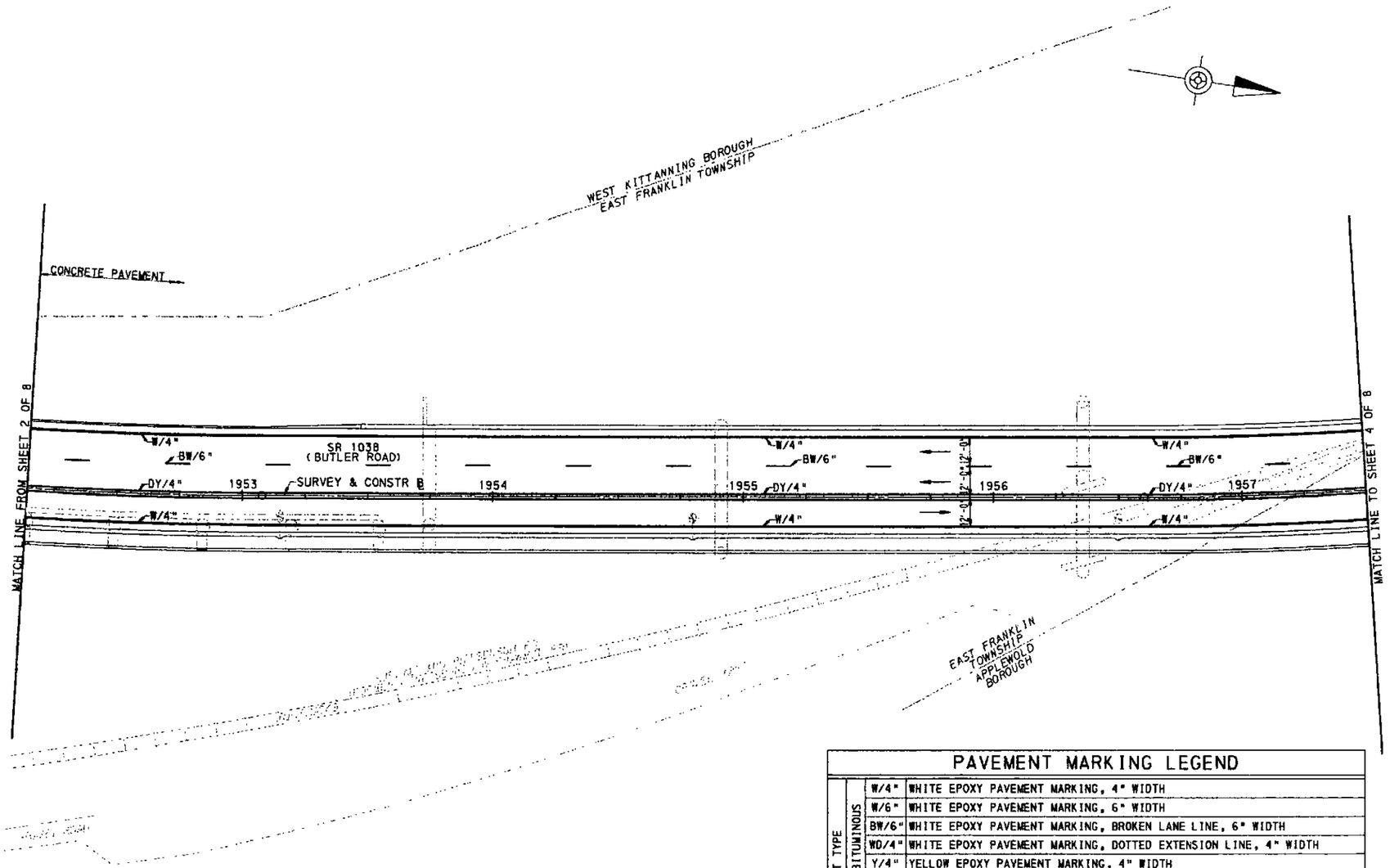

PAVEMENT MARKING LEGEND

PAVEMENT TYPE: CONCRETE AND BITUMINOUS	W/4"	WHITE EPOXY PAVEMENT MARKING, 4" WIDTH
	W/6"	WHITE EPOXY PAVEMENT MARKING, 6" WIDTH
	BW/6"	WHITE EPOXY PAVEMENT MARKING, BROKEN LANE LINE, 6" WIDTH
	WD/4"	WHITE EPOXY PAVEMENT MARKING, DOTTED EXTENSION LINE, 4" WIDTH
	Y/4"	YELLOW EPOXY PAVEMENT MARKING, 4" WIDTH
	DY/4"	DOUBLE YELLOW EPOXY PAVEMENT MARKING, 4" WIDTH
	W/24"	WHITE EPOXY PAVEMENT MARKING, 24" WIDTH
	AW/6"	WHITE EPOXY PAVEMENT MARKING, AUXILIARY LANE LINE, 6" WIDTH
	ONLY	WHITE EPOXY LEGEND, "ONLY", 8'-0"
		WHITE EPOXY LEGEND, "LEFT ARROW", 12'-0"x3'-0"
		WHITE EPOXY LEGEND, "THRU AND RIGHT ARROW", 20'-0"x3'-7"
		DIRECTION OF TRAVEL
		PROPOSED HIGHWAY LIGHTING POLE, SHOWN FOR INFORMATION ONLY

A-00122496

DRAWN BY	TLL
CHECKED BY	MJM

SCALE
25 FEET 0 25 FEET

COMMONWEALTH OF PENNSYLVANIA
REGISTERED PROFESSIONAL
MICHAEL J. MUTH
ENGINEER
PE 044824-E

PAVEMENT MARKING AND DELINEATION PLAN

M:\Projects\5432\Pavmrk\PM4AN02.dgn 7/10/2007

DISTRICT	COUNTY	ROUTE	SECTION	SHEET
10-0	ARMSTRONG	1038	150	4 OF 8
APPLEWOLD BOROUGH AND EAST FRANKLIN TOWNSHIP				

REVISION NUMBER	REVISIONS	DATE	BY

DELINEATOR LEGEND

○	FLEXIBLE DELINEATOR POST TYPE GM-2 - YELLOW / BLANK SHEETING
◐	SURFACE-MOUNTED DELINEATOR POST TYPE SM-2 - YELLOW / BLANK SHEETING
◑	SURFACE-MOUNTED DELINEATOR POST TYPE SM-2 - WHITE / BLANK SHEETING
◒	BARRIER MOUNTED DELINEATOR, TOP-MOUNT TYPE P, - WHITE / BLANK SHEETING
◨	BARRIER MOUNTED DELINEATOR, SIDE-MOUNT TYPE O, - WHITE / BLANK SHEETING
◓	BARRIER MOUNTED DELINEATOR, TOP-MOUNT TYPE P, - YELLOW / BLANK SHEETING
◧	BARRIER MOUNTED DELINEATOR, SIDE-MOUNT TYPE O, - YELLOW / BLANK SHEETING
◨	GUIDE RAIL MOUNTED DELINEATORS (TYPE B AND D), WHITE / BLANK SHEETING

PAVEMENT MARKING LEGEND

PAVEMENT TYPE		
CONCRETE AND BITUMINOUS	W/4"	WHITE EPOXY PAVEMENT MARKING, 4" WIDTH
	W/6"	WHITE EPOXY PAVEMENT MARKING, 6" WIDTH
	BW/6"	WHITE EPOXY PAVEMENT MARKING, BROKEN LANE LINE, 6" WIDTH
	WD/4"	WHITE EPOXY PAVEMENT MARKING, DOTTED EXTENSION LINE, 4" WIDTH
	Y/4"	YELLOW EPOXY PAVEMENT MARKING, 4" WIDTH
	DY/4"	DOUBLE YELLOW EPOXY PAVEMENT MARKING, 4" WIDTH
	W/24"	WHITE EPOXY PAVEMENT MARKING, 24" WIDTH
	AW/6"	WHITE EPOXY PAVEMENT MARKING, AUXILIARY LANE LINE, 6" WIDTH
	ONLY	WHITE EPOXY LEGEND, "ONLY", 8'-0"
	←	WHITE EPOXY LEGEND, "LEFT ARROW", 12'-0"x3'-0"
	←◆	WHITE EPOXY LEGEND, "THRU AND RIGHT ARROW", 20'-0"x3'-7"
	←	DIRECTION OF TRAVEL
	◆	PROPOSED HIGHWAY LIGHTING POLE, SHOWN FOR INFORMATION ONLY

DRAWN BY	TLL
CHECKED BY	MJM

SCALE
25 FEET 0 25 FEET

PAVEMENT MARKING AND DELINEATION PLAN

A-00122496

COMMONWEALTH OF PENNSYLVANIA — PROFESSIONAL ENGINEER — MICHAEL J. MUTH

7/10/2007

DISTRICT	COUNTY	ROUTE	SECTION	SHEET
10-0	ARMSTRONG	1038	150	5 OF 8

APPLEWOLD BOROUGH AND EAST FRANKLIN TOWNSHIP

REVISION NUMBER	REVISIONS	DATE	BY

TABULATION OF SIGNING QUANTITIES

SIGN ASSEMBLY	STATION	LT./RT.	ROUTE	DESCRIPTION / REMARKS		POST MOUNTED SIGNS, TYPE B	POST MOUNTED SIGNS, TYPE C	POST MOUNTED SIGNS, TYPE D		POST MOUNTED SIGNS, TYPE F	POST MOUNTED EXISTING SIGNS, REMOVE, STORE AND RE-SET
				ITEM		0931	0932	0933		0935	9900
				NUMBER		0001	0001	0001		0001	0001
				UNIT		SF	SF	SF		SF	SF
1	1948+25	LT.	S.R. 1038	R2-1	SPEED LIMIT SIGN (24" X 30")	5.00					
2	1948+25	RT.		OM-3R	RIGHT CLEARANCE MARKER (12" X 36")	3.00					
3	1948+75	RT.		R2-1	SPEED LIMIT SIGN (24" X 30")	5.00					
4	1949+90	RT.		W8-13	BRIDGE ICES BEFORE ROAD SIGN (36" X 36")	9.00					
5	1951+25	RT.		R2-2-1	TRUCKS OVER 21000 LBS. SPEED SIGN (30" X 36")			7.50			
6	1952+10	RT.		R12-1-2	BRIDGE SIGN (24" X 12")			2.00			
7	1957+00	RT.		110-2	BOROUGH NAME SIGN (36" X 12")			3.00			
8	1957+75	LT.		110-4	TOWNSHIP NAME SIGN (36" X 12")			3.00			
9	1958+50	RT.		R3-2	NO LEFT TURN SIGN (24" X 24")			4.00			
10	1959+14	LT.		R3-2	NO LEFT TURN SIGN (24" X 24")	4.00					
10	1959+14	LT.		R12-1-2	BRIDGE SIGN (24" X 12")					2.00	
10	1959+14	LT.		OM-3R	RIGHT CLEARANCE MARKER (12" X 36")					3.00	
11	1959+25	RT.		W1-1R	RIGHT TURN SIGN (30" X 30")			6.25			
11	1959+25	RT.		W13-1	ADVISORY SPEED PLAQUE (18" X 18")					2.25	
12	1960+00	LT.		W8-13	BRIDGE ICES BEFORE ROAD SIGN (36" X 36")	9.00					
13	1960+00	RT.		W2-1	CROSS ROAD SIGN (30" X 30")			6.25			
14	1960+40	LT.		W1-8	CHEVRON ALIGNMENT SIGN (18" X 24")	3.00					
15	1960+60	LT.		R2-1	SPEED LIMIT SIGN (24" X 30")	5.00					
16	1960+75	RT.		R3-8A (L-SR)	LANE USE CONTROL (TWO LANES) SIGN (30" X 30")			6.25			
17	1960+80	LT.		W1-8	CHEVRON ALIGNMENT SIGN (18" X 24")	3.00					
18	1961+00	LT.		140-1	ADOPT-A-HIGHWAY, NEXT 2 MILES SIGN (48" X 24")		8.00				
18	1961+00	LT.		142-1	NAME OF PERSON(S) SIGN (48" X 8")					2.67	
18	1961+00	LT.		144-1	ADOPT-A-HIGHWAY THANK YOU SIGN (48" X 18")					6.00	
19	1961+25	RT.		R3-7L	LEFT LANE MUST TURN LEFT SIGN (30" X 30")			6.25			
20	1961+82	LT.		R9-3A	NO PEDESTRIAN CROSSING SIGN (18" X 18")	2.25					
21	1961+82	RT.		R9-3A	NO PEDESTRIAN CROSSING SIGN (18" X 18")	2.25					
22	1961+99	RT.		R3-8A (L-SR)	LANE USE CONTROL (TWO LANES) SIGN (30" X 30")	6.25					
23	1962+08	LT.		W4-3R	RIGHT ADDED LANE SIGN (48" X 48")	16.00					
24	1962+93	LT.		D1-1	SINGLE-LINE DESTINATION SIGN (48" X 8")					2.67	
24	1962+93	LT.		D7-4	ATTRACTION SIGN (48" X 16")	5.33					
25	1962+99	RT.		(EXISTING)	KITTANNING-PENNSYLVANIA HISTORICAL AND MUSEUM COMMISSION SIGN (36" X 36")						9.00
26	1963+10	RT.		(EXISTING)	KITTANNING CITIZENS BRIDGE SIGN (48" X 24")						8.00
26	1963+10	RT.		(EXISTING)	ALLEGHENY RIVER SIGN (24" X 18")						3.00
27	1963+16	LT.		R3-8A (L-SR)	LANE USE CONTROL (TWO LANES) SIGN (30" X 30")	6.25					
28	1964+25	LT.		R3-7LA	LEFT LANE MUST TURN LEFT SIGN (24" X 48")					8.00	
40	10+32	RT.	S.R. 4025	R6-1L	HORIZONTAL LEFT ONE-WAY SIGN (36" X 12")			3.00			
40	10+32	RT.	PINE HILL RD.	R6-1R	HORIZONTAL RIGHT ONE-WAY SIGN (36" X 12")					3.00	
41	10+49	LT.		D3-1	STREET NAME SIGN (36" X 8")					2.00	
41	10+49	LT.		W1-1IR	RIGHT HORSESHOE CURVE SIGN (30" X 30")			6.25			
41	10+49	LT.		R2-1	SPEED LIMIT SIGN (24" X 30")					5.00	
42	10+65	LT.		W1-8	CHEVRON ALIGNMENT SIGN (18" X 24")			3.00			
43	10+85	LT.		W1-8	CHEVRON ALIGNMENT SIGN (18" X 24")			3.00			
44	11+05	LT.		W1-8	CHEVRON ALIGNMENT SIGN (18" X 24")			3.00			
45	13+50	RT.		R2-1	SPEED LIMIT SIGN (24" X 30")	5.00					
46	24+75	LT.		R5-1A	WRONG WAY SIGN (36" X 24")	6.00					
47	24+75	RT.		R5-1A	WRONG WAY SIGN (36" X 24")	6.00					
	SUB TOTAL					101.33	8.00	62.75		36.59	20.00

SIGN ASSEMBLY	STATION	LT./RT.	ROUTE	REMARKS		POST MOUNTED SIGNS, TYPE B	POST MOUNTED SIGNS, TYPE C	POST MOUNTED SIGNS, TYPE D		POST MOUNTED SIGNS, TYPE F	POST MOUNTED EXISTING SIGNS, REMOVE, STORE AND RE-SET
				ITEM		0931	0932	0933		0935	9900
				NUMBER		0001	0001	0001		0001	0001
				UNIT		SF	SF	SF		SF	SF
48	*	LT.	*	R1-1	STOP SIGN (30" X 30")	6.25					
48	*	LT.		R5-1	DO NOT ENTER SIGN (30" X 30")					6.25	
48	*	LT.		R6-1L	HORIZONTAL LEFT ONE-WAY SIGN (36" X 12")					3.00	
48	*	LT.		R6-1R	HORIZONTAL RIGHT ONE-WAY SIGN (36" X 12")					3.00	
49	*	RT.	S.R. 4025 PINE HILL RD. CARTER AVE. INTERSECTION	R1-1	STOP SIGN (30" X 30")	6.25					
49	*	RT.		R5-1	DO NOT ENTER SIGN (30" X 30")					6.25	
49	*	RT.		R6-1L	HORIZONTAL LEFT ONE-WAY SIGN (36" X 12")					3.00	
49	*	RT.		R6-1R	HORIZONTAL RIGHT ONE-WAY SIGN (36" X 12")					3.00	
			*								
50	20+25	LT.	S.R. 4023 TARRTOWN RD.	R1-1	STOP SIGN (30" X 30")	6.25					
51	20+53	LT.		R9-3A	NO PEDESTRIAN CROSSING SIGN (18" X 18")	2.25					
52	20+53	RT.		R9-3A	NO PEDESTRIAN CROSSING SIGN (18" X 18")	2.25					
53	20+70	LT.		R1-1	STOP SIGN (30" X 30")	6.25					
54	20+84	RT.		D3-1	STREET NAME SIGN (36" X 8")	2.00					
54	20+84	RT.		D3-1	STREET NAME SIGN (36" X 8")					2.00	
55	21+38	LT.		(EXISTING)	LOCK 7 ALLEG. RIVER SIGN (72" X 12")						6.00
56	21+75	RT.		R2-1	SPEED LIMIT SIGN (24" X 30")	5.00					
60	30+32	LT.	ALLEGHENY ST.	R1-1	STOP SIGN (30" X 30")	6.25					
61	30+56	RT.		D3-1	STREET NAME SIGN (36" X 8")	2.00					
61	30+56	RT.		D3-1	STREET NAME SIGN (36" X 8")					2.00	
61	30+56	RT.		D3-1	STREET NAME SIGN (36" X 8")					2.00	
61	30+56	RT.		D3-1	STREET NAME SIGN (36" X 8")					2.00	
62	30+70	RT.		(EXISTING)	APPLEWOLD ZONED PERMIT SIGN (18" X 30")						3.75
63	30+80	RT.		(EXISTING)	NO TRUCK SIGN (24" X 24")						4.00
63	30+80	RT.		(EXISTING)	EXCEPT LOCAL DELIVERIES SIGN (24" X 18")						3.00
64	30+90	RT.		R12-1	WEIGHT LIMIT 7½ TONS SIGN (24" X 30")	5.00					
	SUB TOTAL					49.75	0.00	0.00		32.50	16.75
	TOTAL					152.00	8.00	63.00		70.00	37.00

GENERAL NOTES - SIGNING

1. PLACE ALL SIGNS AND SIGN STRUCTURES ENTIRELY WITHIN THE LEGAL RIGHT-OF-WAY.
2. USE SQUARE POSTS FOR ALL TYPE B, POST MOUNTED SIGNS TO BE INSTALLED.
3. FOR NAMES ADDRESSES AND LOCATIONS OF EXISTING UTILITY FACILITIES, SEE ROADWAY CONSTRUCTION PLANS.
4. IT IS THE RESPONSIBILITY OF THE CONTRACTOR TO CONTACT THE APPROPRIATE UTILITY COMPANY FOR LOCATION OF UNDERGROUND FACILITIES AT ANY LOCATION WHERE AN EXISTING UNDERGROUND UTILITY IS SUSPECTED OR SHOWN ON THE PROJECT DRAWINGS. WHENEVER AN EXISTING UNDERGROUND UTILITY IS SHOWN ON THE DRAWINGS TO BE LOCATED IN THE IMMEDIATE VICINITY OF PROPOSED CONSTRUCTION, ITS LOCATION IS APPROXIMATE, AND THE CONTRACTOR SHALL CONTACT THE UTILITY COMPANY AND REQUEST THAT THEY FIELD LOCATE THEIR FACILITY.
5. REINSTALL ALL SEGMENT MARKERS REMOVED TO ACCOMMODATE CONSTRUCTION. REINSTALL EXISTING NON-APPROVED PENNDOT SIGNS REMOVED TO ACCOMMODATE CONSTRUCTION AND INSTALLATION OF APPROVED PENNDOT SIGNS AS DIRECTED BY THE PENNSYLVANIA DEPARTMENT OF TRANSPORTATION DISTRICT 10-0 ENGINEER.
6. SATISFACTORILY DISPOSE OF ALL EXISTING SIGNS, POST AND HARDWARE UPON REPLACEMENT UNLESS OTHERWISE DIRECTED. ALL DISPOSED SIGNS SHALL BE THE PROPERTY OF DISTRICT 10-0.
7. CONSTRUCT SIGNING IN ACCORDANCE WITH PENNDOT PUBLICATION 408/2007 SPECIFICATIONS, INCLUDING ALL APPLICABLE SUPPLEMENTS. SIGNING ALSO TO CONFORM TO STANDARDS ESTABLISHED IN THE FEDERAL HIGHWAY ADMINISTRATION'S MANUAL ON UNIFORM TRAFFIC CONTROL DEVICES (MUTCD) FOR STREETS AND HIGHWAYS, 2003 EDITION, INCLUDING ALL APPLICABLE SUPPLEMENTS.
8. ALL SIGNS ARE TO BE FABRICATED AND INSTALLED IN ACCORDANCE WITH PUBLICATION 236M, (HANDBOOK OF APPROVED SIGNS, DATED FEBRUARY 28, 2006), INCLUDING ALL APPLICABLE SUPPLEMENTS.
9. ALL SIGNS ARE TO BE FABRICATED AND INSTALLED IN ACCORDANCE WITH PUBLICATION 111M, TRAFFIC CONTROL SIGNING STANDARD DRAWINGS LISTED AS FOLLOWS:

   TC 8700C AUGUST 01, 1997 TC 8702B AUGUST 01, 1997

   TC 8702C AUGUST 01, 1997 TC 8702D AUGUST 01, 1997

DRAWN BY	CAD
CHECKED BY	RJS

SIGNING PLAN

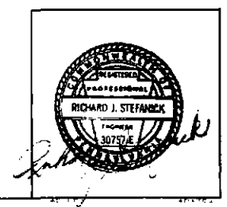

A-00122496

DISTRICT	COUNTY	ROUTE	SECTION	SHEET
10-0	ARMSTRONG	1038	150	6 OF 8

WEST KITTANNING BOROUGH AND EAST FRANKLIN TOWNSHIP

REVISION NUMBER	REVISIONS	DATE	BY

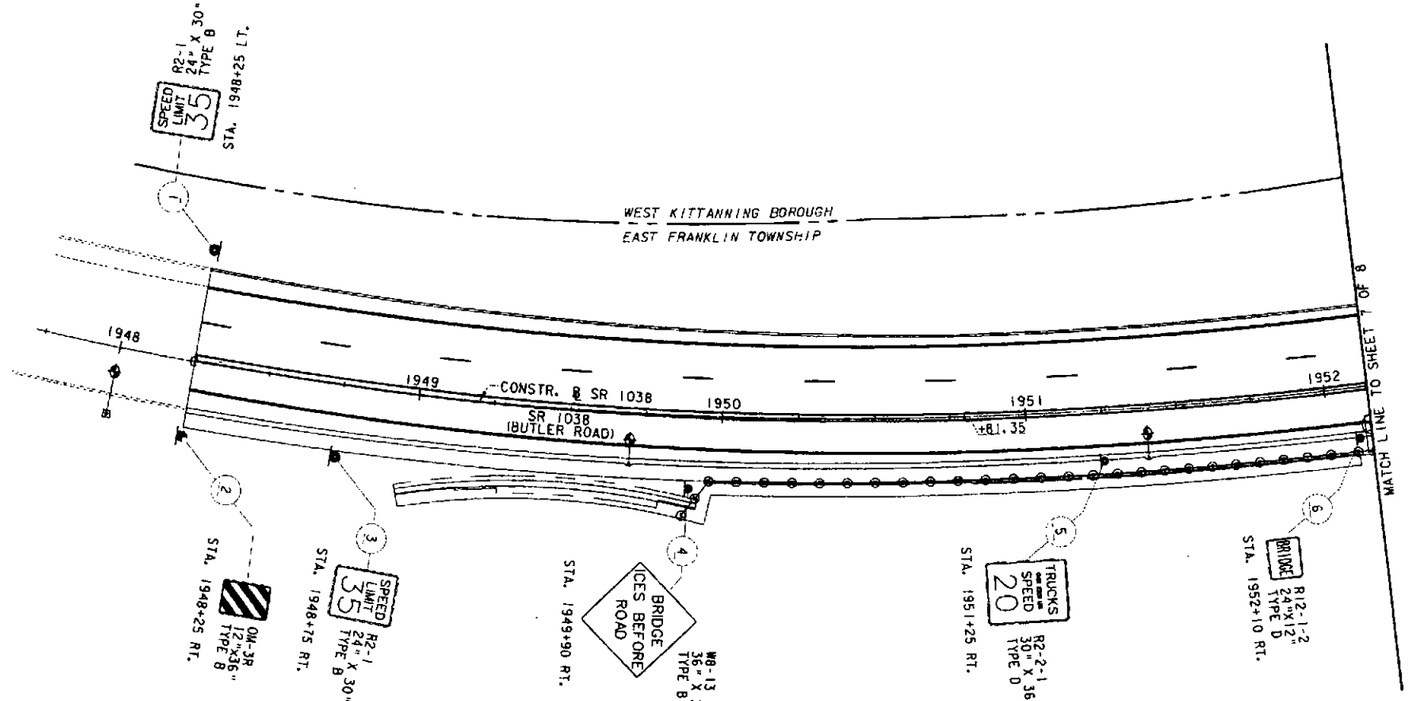

DRAWN BY	CAD
CHECKED BY	RJS

SCALE
25 FEET 0 25 FEET

SIGNING PLAN

COMMONWEALTH OF PENNSYLVANIA
RICHARD J. STEFANICK
PROFESSIONAL ENGINEER

A-00122496

*APPLEWOLD BOROUGH
WEST KITTANNING BOROUGH
EAST FRANKLIN TOWNSHIP

DISTRICT	COUNTY	ROUTE	SECTION	SHEET
10-0	ARMSTRONG	1038	150	7 OF 8

*

REVISION NUMBER	REVISIONS	DATE	BY

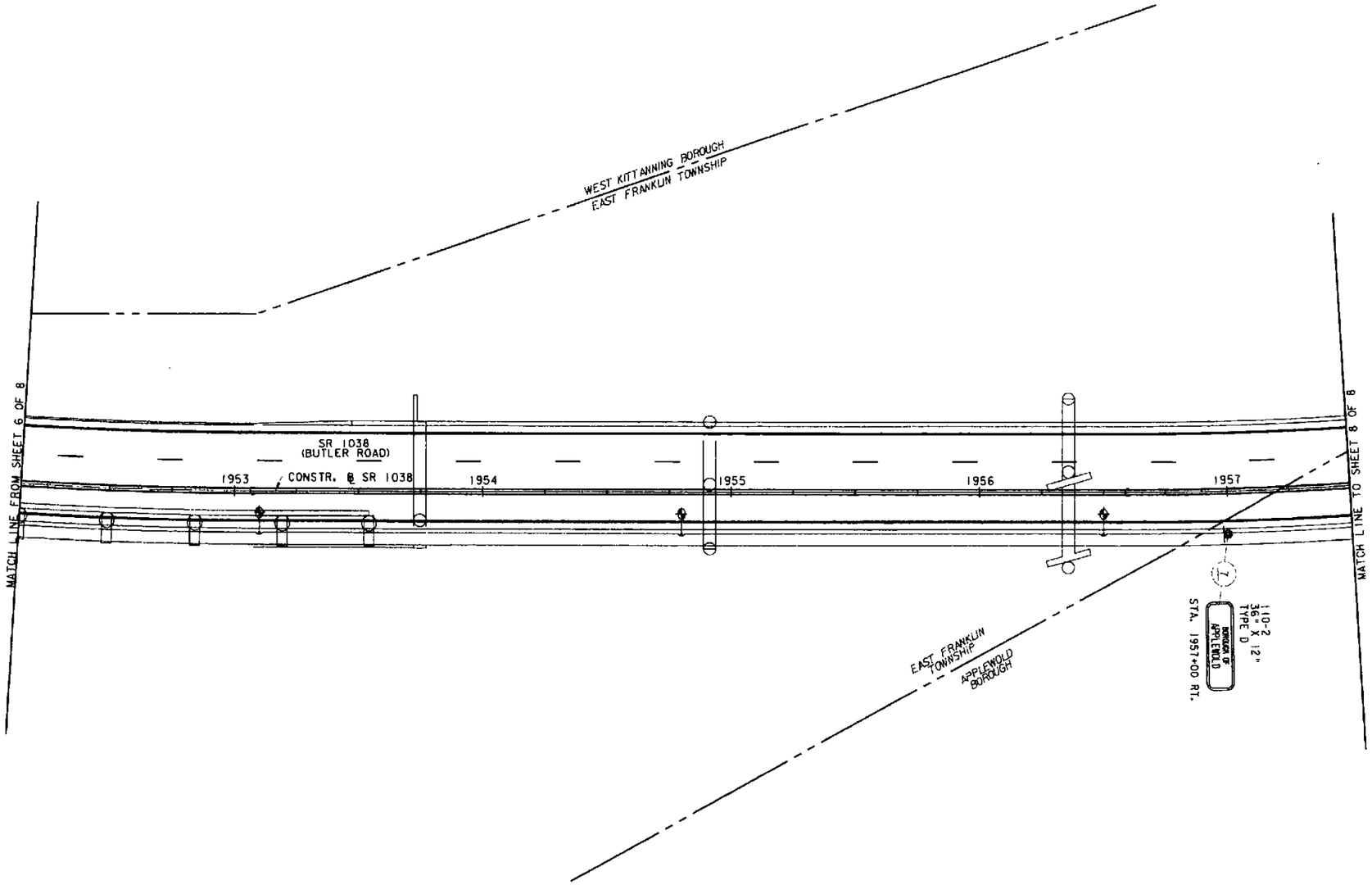

DRAWN BY	CAD
CHECKED BY	RJS

SCALE
25 FEET 0 25 FEET

SIGNING PLAN

COMMONWEALTH OF PENNSYLVANIA
PROFESSIONAL
RICHARD J. STEFANICK
PENNSYLVANIA

A-00122496

DISTRICT	COUNTY	ROUTE	SECTION	SHEET
10-0	ARMSTRONG	1038	150	8 OF 8

APPLEWOLD BOROUGH AND EAST FRANKLIN TOWNSHIP

REVISION NUMBER	REVISIONS	DATE	BY

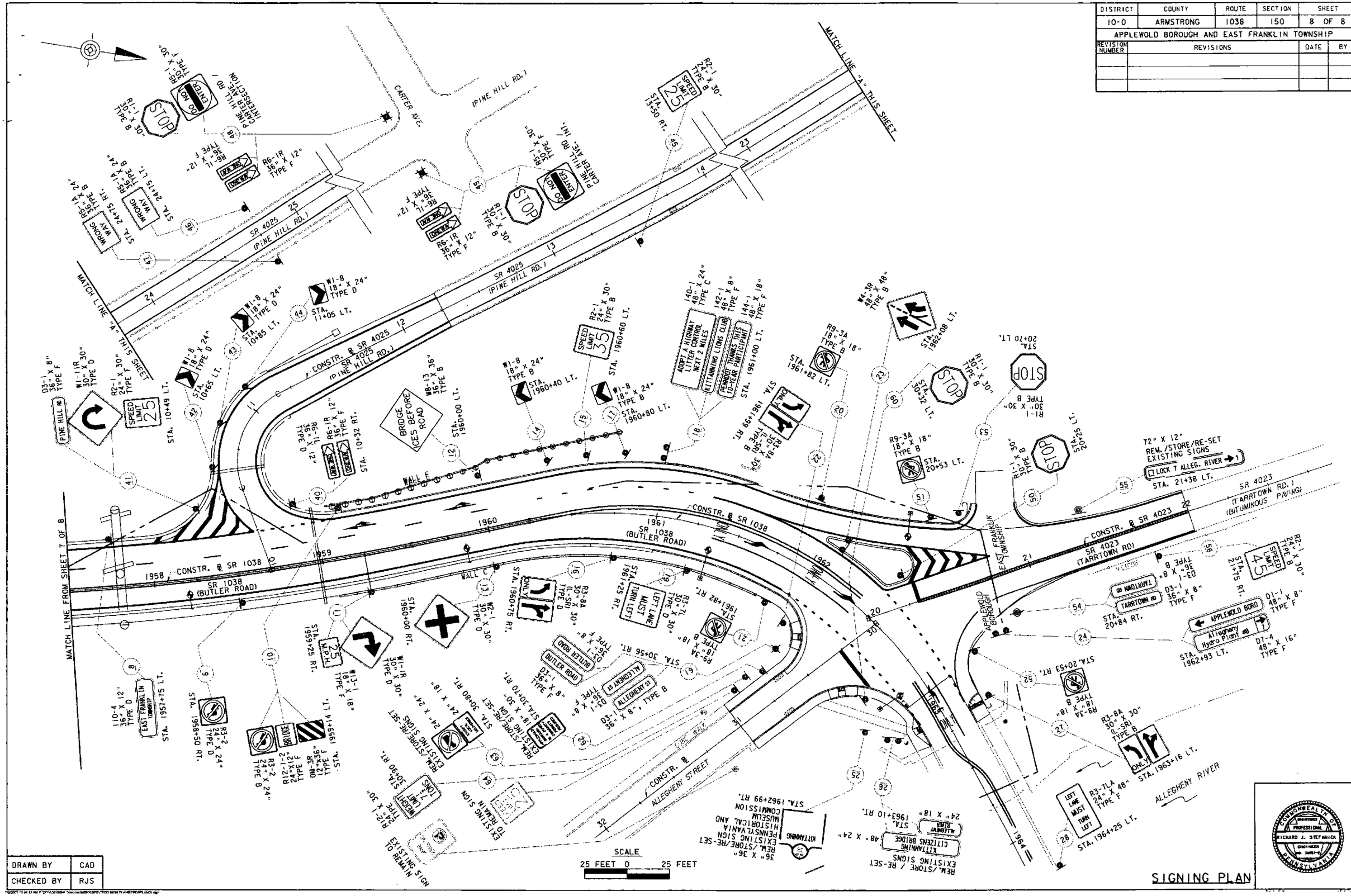

DRAWN BY	CAD
CHECKED BY	RJS

SIGNING PLAN

COMMONWEALTH OF PENNSYLVANIA
PROFESSIONAL
RICHARD J. STEFANICK
ENGINEER

A-00122496

DISTRICT	COUNTY	ROUTE	SECTION	SHEET
10-0	ARMSTRONG	1038	150	1 OF 9
EAST FRANKLIN TWP., WEST KITTANNING & APPLEWOLD BORO.'S				

REVISION NUMBER	REVISIONS	DATE	BY

INDEX

DESCRIPTION	SHEET
TITLE SHEET AND GENERAL NOTES	1 THROUGH 2 OF 9
SPECIAL DETAILS	3 THROUGH 5 OF 9
INFORMATIONAL TABULATION SHEETS	6 OF 9
PLAN SHEETS	7 THROUGH 9 OF 9

GENERAL NOTES

THE PURPOSE OF THIS PLAN IS TO PROVIDE EFFECTIVE EROSION AND SEDIMENT POLLUTION CONTROL PROCEDURES TO MINIMIZE ACCELERATED EROSION AND SEDIMENT POLLUTION UNDER NORMAL CONDITIONS, AND SHALL NOT BE CONSTRUED IN WHOLE OR PART AS ADEQUATE FOR STREAM CONTROL AND SOIL STABILIZATION DURING CONSTRUCTION.

IN ADDITION TO THE REQUIREMENTS IDENTIFIED ON THESE PLANS, THE CONTRACTOR SHALL COMPLY WITH THE REQUIREMENTS AND CONTROLS DESCRIBED IN THE EROSION AND SEDIMENT POLLUTION CONTROL NARRATIVE APPROVED AS PART OF THE EROSION AND SEDIMENT POLLUTION CONTROL PERMIT FOR THIS PROJECT BY THE ARMSTRONG COUNTY CONSERVATION DISTRICT.

ANY ADDITIONAL REQUIREMENTS TO ADEQUATELY CONTROL EROSION AND SEDIMENT POLLUTION SHALL BE THE RESPONSIBILITY OF THE CONTRACTOR AND SHALL BE CONSIDERED INCIDENTAL TO THE EXCAVATION, UNLESS OTHERWISE SPECIFIED.

THE CONTRACTOR MAY SUBMIT AN EROSION AND SEDIMENT POLLUTION CONTROL PLAN OF HIS OWN DESIGN. SUBMIT THE PLAN TO THE ARMSTRONG COUNTY CONSERVATION DISTRICT FOR APPROVAL. PROVIDE A COPY TO THE ENGINEER PRIOR TO STARTING WORK. DO NOT START THIS WORK UNTIL THE PLAN HAS BEEN REVIEWED AND ACCEPTED.

DEVELOP AND SUBMIT AN EROSION AND SEDIMENT POLLUTION CONTROL PLAN FOR ANY OFF SITE BORROW AND/OR WASTE AREAS AS REQUIRED BY THE ARMSTRONG COUNTY CONSERVATION DISTRICT.

NPDES PERMIT BOUNDARY IS THE RIGHT OF WAY, EASEMENTS, STATION WORK LIMITS, AND AS SHOWN ON THE PLAN.

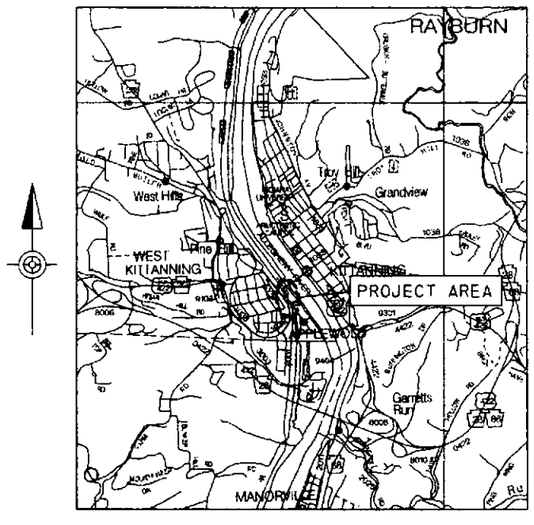

LOCATION MAP

NOT TO SCALE

MAINTAIN A POSITIVE FLOW IN EXISTING AND CONSTRUCTED CHANNELS DURING CONSTRUCTION ACTIVITIES.

CONSTRUCT ROCK CONSTRUCTION ENTRANCES AS INDICATED AND AT ALL LOCATIONS WHERE CONSTRUCTION EQUIPMENT ENTERS PUBLIC ROADWAYS. CONSTRUCTION EQUIPMENT MAY NOT ENTER DIRECTLY FROM THE DISTURBED AREA TO PUBLIC ROADWAYS. DO NOT ALLOW MUD OR SEDIMENT TO BE TRACKED ONTO PUBLIC ROADWAYS. WASHING OF THE ROADWAY WITH WATER IS NOT PERMITTED.

STOCKPILE AREAS ARE NOT ANTICIPATED FOR THIS PROJECT. STABILIZE ANY STOCKPILED MATERIAL AND TOPSOIL USING PERIMETER CONTROLS AND TEMPORARY SEEDING. PROVIDE NECESSARY EROSION AND SEDIMENT POLLUTION CONTROLS DOWN SLOPE OF AREA PRIOR TO STOCKPILING. TEMPORARY TOPSOIL STOCKPILE HEIGHTS MUST NOT EXCEED 35 FEET AND SIDE SLOPES MUST BE 2:1 OR FLATTER.

DRAWN BY	SGM
CHECKED BY	JLS

THE PROJECT IS SUBJECT TO INSPECTION BY AUTHORIZED REPRESENTATIVES OF THE DEPARTMENT OF ENVIRONMENTAL PROTECTION AND THE ARMSTRONG COUNTY CONSERVATION DISTRICT.

ANY DISTURBED AREA ON WHICH ACTIVITY HAS CEASED AND WHICH WILL REMAIN EXPOSED FOR MORE THAN 20 DAYS MUST BE SEEDED AND MULCHED IMMEDIATELY. DURING GERMINATING PERIODS, MULCH MUST BE APPLIED AT RECOMMENDED RATES. DISTURBED AREAS WHICH ARE NOT AT FINISHED GRADE AND WHICH WILL BE DISTURBED WITHIN 1 YEAR MUST BE SEEDED AND MULCHED WITH TEMPORARY SEEDING MIXTURE AND MULCH. DISTURBED AREAS WHICH ARE EITHER AT FINISHED GRADE OR WILL NOT BE RE-DISTURBED WITHIN 1 YEAR MUST BE SEEDED AND MULCHED WITH A PERMANENT SEED MIXTURE AND MULCH. PRIOR TO ANY CLEARING, GRUBBING OR EARTH DISTURBANCE, LIMIT OF DISTURBANCE MUST BE SURVEYED AND MARKED IN THE FIELD.

SEQUENCE OF BMP INSTALLATION AND EARTHMOVING ACTIVITIES

THE FOLLOWING IS A DESCRIPTION OF THE ANTICIPATED CONSTRUCTION SEQUENCE FOR THIS PROJECT. THE GOAL OF THIS SEQUENCE IS TO LIMIT THE AMOUNT OF EXPOSED AREAS AND THUS REDUCE, TO THE EXTENT POSSIBLE, PRODUCTION OF EROSION AND SEDIMENT DURING CONSTRUCTION. THIS SEQUENCE IS INCLUDED ON THE EROSION AND SEDIMENT POLLUTION CONTROL PLAN AS LISTED BELOW. THE INFORMATION IS PRESENTED IN ONE PHASE, ENCOMPASSING ALL STAGES OF CONSTRUCTION, AND SHOULD BE CONSTRUCTED IN SUCCESSION WITH ONE STEP BEING COMPLETED BEFORE THE NEXT STEP BEGINS. HOWEVER, IT SHOULD BE NOTED THAT THE EROSION AND SEDIMENT CONTROLS AS DESIGNED ARE NOT DEPENDENT ON THE STAGES PROCEEDING IN THIS ORDER. THEREFORE, SHOULD THE CONTRACTOR BE UNABLE TO PROCEED WITH CONSTRUCTION IN THIS ORDER FOR REASONS UNKNOWN AT THIS TIME, OR AT THE DIRECTION OF PENNDOT, THE EROSION AND SEDIMENT CONTROL MEASURES WILL STILL BE EFFECTIVE AT CONTROLLING EROSION.

SEQUENCE GENERAL NOTES

INSTALL ALL EROSION AND SEDIMENT CONTROL BMP'S PRIOR TO EARTHMOVING ACTIVITIES AND CLEARING AND GRUBBING, AS INDICATED ON THE EROSION AND SEDIMENT (E&S) POLLUTION CONTROL PLANS. THE CONTRACTOR IS RESPONSIBLE FOR THE CREATION AND SUBMISSION OF AN E&S PLAN TO THE ARMSTRONG COUNTY CONSERVATION DISTRICT FOR EACH SPOIL, BORROW, STAGING, STOCKPILE, OR OTHER WORK AREA NOT DETAILED ON THE PLAN OR FOR UNEXPECTED WORK OUTSIDE THE PROJECT LIMITS. ANY REQUIRED PERMIT MODIFICATIONS ARE THE RESPONSIBILITY OF THE CONTRACTOR. ALL CONTROL FACILITIES IN THE GRADING AREAS WILL BE INSTALLED PRIOR TO EARTHMOVING WITH THE EXCEPTION OF INLET PROTECTION.

THE CONTRACTOR WILL OBSERVE THE FOLLOWING CONSTRUCTION GUIDELINES DURING THE ENTIRE PHASE OF CONSTRUCTION.

THESE GENERAL ACTIVITIES WILL BE ACCOMPLISHED AS PART OF THE EROSION AND SEDIMENT POLLUTION CONTROL FOR EACH PROJECT AREA.

ROCK CONSTRUCTION ENTRANCES WILL BE PLACED, AND PERIMETER EROSION AND SEDIMENT POLLUTION CONTROLS WILL BE ESTABLISHED.

INSTALL THE TEMPORARY PERIMETER EROSION AND SEDIMENTATION POLLUTION CONTROLS INCLUDING SILT FENCE AND TEMPORARY FENCE AS SHOWN ON PLANS.

LIMITED CLEARING AND GRUBBING REQUIRED TO INSTALL THE ROCK CONSTRUCTION ENTRANCES AND THE PERIMETER CONTROLS IS PERMITTED.

INSTALLATION OF EROSION AND SEDIMENT BMP'S WILL BE IMPLEMENTED BEFORE GENERAL CLEARING AND GRUBBING OF THE SITE.

SEED AND MULCH ALL FINISHED CHANNELS, SWALES, AND VEGETATIVE SLOPES AT MAXIMUM 15-FOOT VERTICAL INTERVALS.

ANTICIPATED CONSTRUCTION ACTIVITIES:

INSTALL E&S POLLUTION CONTROLS.

SET TRAFFIC CONTROLS TO DETOUR THRU TRAFFIC AROUND THE PROJECT SITE DURING CONSTRUCTION.

DEMOLISH AND REMOVE THE EXISTING BRIDGE, INCLUDING THE SUPERSTRUCTURE AND THE SUBSTRUCTURE, EXISTING DRAINAGE, AND RETAINING WALLS.

EXCAVATE, CLEAN, AND PREPARE THE SITE FOR THE INSTALLATION OF FOOTINGS, WINGWALLS, ABUTMENTS, AND PIERS.

INSTALL THE DRAINAGE SYSTEM INCLUDING INLETS, PIPING, GRAVEL FILTERS AND OUTLET STRUCTURES.

COMPLETE ALL CONSTRUCTION ACTIVITIES ASSOCIATED WITH THE RECONSTRUCTION OF THE NEW BRIDGE, INCLUDING SUBSTRUCTURES AND SUPERSTRUCTURE.

COMPLETE APPROACH SLABS, PAVING, LIGHTING AND GUIDERAIL CONSTRUCTION ACTIVITIES.

SEQUENCE OF BMP INSTALLATION:

INSTALLATION OF ALL EROSION AND SEDIMENT POLLUTION CONTROL BMPs MUST BE COMPLETE AND APPROVED BY THE INSPECTOR PRIOR TO CLEARING AND GRUBBING AND EARTHMOVING ACTIVITIES. CONTROL MEASURES SHALL BE INSTALLED AS INDICATED ON THE E&S POLLUTION CONTROL PLANS. THE CONTRACTOR WILL OBSERVE THE FOLLOWING SEQUENCE DURING CONSTRUCTION.

1. INSTALL ROCK CONSTRUCTION ENTRANCES ALONG FRANKLIN AVENUE AND ALONG SR 4023 AT THE INTERSECTION WITH SR 1038 AS SHOWN ON THE PLANS AND AS NECESSARY TO PLACE THE EROSION AND SEDIMENT PERIMETER CONTROLS.

2. INSTALL THE TEMPORARY EROSION AND SEDIMENTATION POLLUTION PERIMETER CONTROLS INCLUDING SILT FENCE AND SEDIMENT FILTER BAGS AS SHOWN ON THE PLANS.

3. LIMITED CLEARING AND GRUBBING REQUIRED TO INSTALL THE ROCK CONSTRUCTION ENTRANCES, E&S CONTROLS, AND THE PERIMETER CONTROLS IS PERMITTED.

4. BEGIN DEMOLITION ACTIVITIES BY REMOVING DECK AND FLOOR SYSTEM, SUPPORTS, PIERS, ABUTMENTS, RETAINING WALLS, AND FOOTINGS. UTILIZE SEDIMENT FILTER BAGS AND PUMPS TO REMOVE STANDING WATER IN EXCAVATED AREAS AT LOCATIONS SHOWN ON THE PLANS OR AS NEEDED.

5. REMOVE DEMOLISHED BRIDGE MATERIAL FROM SITE AT THE EARLIEST CONVENIENT TIME. WASTE MATERIAL IS TO BE DISPOSED OF OFFSITE AT AN APPROVED LOCATION DETERMINED BY THE CONTRACTOR AND IN ACCORDANCE WITH SECTION A.3.0.

6. INSTALL DRAINAGE SYSTEM D AND THE MAINLINE OF SYSTEM A ALONG SR 1038 (BUTLER ROAD) FROM OUTLET A-O TO STATION 1948+50, INCLUDING INLETS, CHANNELS, LININGS, MANHOLES, PIPES, AND ROCK APRON. EXCAVATION SHALL BE LIMITED TO THE LENGTH OF PIPE THAT MAY REASONABLY BE INSTALLED IN ONE DAY. INSTALL DRAINAGE SYSTEMS B AND C ALONG ALLEGHENY AVENUE, AS SHOWN ON PLANS. REMOVE OR PLUG EXISTING SYSTEM WHERE NEW INLETS ARE BEING INSTALLED. INSTALL INLET GRAVEL FILTERS AS SHOWN ON THE PLAN AT THE EARLIEST CONVENIENT TIME.

7. EXCAVATE, CLEAN, AND PREPARE THE SITE AS NECESSARY FOR THE CONSTRUCTION OF WINGWALLS, ABUTMENTS, AND PIERS.

8. CONSTRUCT SUBSTRUCTURES INCLUDING FOUNDATIONS, WALLS, PIERS AND ABUTMENTS. ACCESS FOR THE INSTALLATION OF WALLS C AND G IS LIMITED TO THE ROADWAY. BACKFILL, GRADE, INSTALL ROCK, SEED AND MULCH AS REQUIRED.

9. INSTALL THE REMAINDER OF SYSTEM A ALONG SR 4025 (PINE HILL ROAD) INCLUDING ROCK APRON AND GABION MATTRESS AS SHOWN ON PLANS. REFER TO TYPICAL DRAWING RC-43M FOR INSTALLATION DETAILS OF MATTRESS. INSTALL INLET PROTECTION AT THE EARLIEST CONVENIENT TIME.

10. CONSTRUCT SUPERSTRUCTURE INCLUDING SETTING STEEL, DECK PLACEMENT, SCUPPERS AND DOWNSPOUTS.

11. GRADE SWALES ALONG RAILROAD TO SIZE AND SLOPE AS SHOWN ON THE TABULATION DETAIL SHEET IN THE PLANS. SEED AND MULCH ALL FINISHED CHANNELS, SWALES, AND SLOPES AT MAXIMUM 15-FOOT VERTICAL INTERVALS AS SPECIFIED ON THE PLANS.

12. RECONSTRUCT SR 1038 (BUTLER ROAD), SR 4025 (PINE HILL ROAD), SR 4023 (TARRTOWN ROAD), AND ALLEGHENY AVENUE APPROACHES.

13. COMPLETE ROADWAY WORK, TIE-INS, LIGHTING, PAVEMENT MARKINGS, AND GUIDERAIL.

14. SEED AND MULCH ALL FINISHED CHANNELS, SWALES, AND SLOPES AT MAXIMUM 15-FOOT VERTICAL INTERVALS AS SPECIFIED ON THE PLANS. ONCE ALL CONSTRUCTION ACTIVITIES ARE COMPLETED, AND THE DISTURBED AREAS ARE PERMANENTLY STABILIZED WITH A UNIFORM 70% PERENNIAL VEGETATIVE COVER, REMOVE ALL EROSION AND SEDIMENT CONTROLS AND RESTORE DISTURBED AREAS TO EXISTING CONDITIONS. SEED AND MULCH AREAS DISTURBED BY THE EROSION AND SEDIMENT CONTROLS.

TEMPORARY AND PERMANENT BMP CONTROL FACILITIES FOR USE BEFORE, DURING AND AFTER EARTH DISTURBANCE ACTIVITIES

TO MINIMIZE ACCELERATED EROSION AND OFF-SITE SEDIMENTATION, THE FOLLOWING ITEMS HAVE BEEN INCLUDED IN THIS PROJECT.

ROCK CONSTRUCTION ENTRANCES

AN ITEM FOR ROCK CONSTRUCTION ENTRANCES IS INCLUDED IN THIS PROJECT. THE CONTRACTOR WILL CONSTRUCT THESE ENTRANCES FOR USE IN ACCESSING CONSTRUCTION WORK SITES AT THE LOCATIONS INDICATED ON THE E&S PLAN, AND AS NEEDED. REFER TO THE E&S PLANS FOR DETAILS.

AN ITEM FOR ROCK CONSTRUCTION ENTRANCES IS INCLUDED IN THIS PROJECT. THE CONTRACTOR WILL CONSTRUCT THESE ENTRANCES FOR USE IN ACCESSING CONSTRUCTION WORK SITES AT THE LOCATIONS INDICATED ON THE E&S PLAN, AND AS NEEDED. REFER TO THE E&S PLANS FOR DETAILS.

THE ROCK CONSTRUCTION ENTRANCES WILL BE CONSTRUCTED OF NO. 1 COARSE AGGREGATE PLACED AT AN EIGHT-INCH MINIMUM THICKNESS. THESE ENTRANCES WILL EXTEND ACROSS THE TRAVELED WAY FOR A MINIMUM LENGTH OF 50 FEET WITH A MINIMUM WIDTH OF 20 FEET, OR AS REQUIRED TO MINIMIZE THE AMOUNT OF MATERIAL TRACKED ONTO THE ROADWAY BY HEAVY CONSTRUCTION EQUIPMENT. UPON COMPLETION OF THE CONSTRUCTION ENTRANCES, UNSUITABLE MATERIAL WILL BE REMOVED AND THE AREA GRADED, SEEDED, AND MULCHED.

A-00122496

EROSION AND SEDIMENT POLLUTION CONTROL PLAN

TITLE SHEET & GENERAL NOTES

COMMONWEALTH OF PENNSYLVANIA — MICHAEL J. SMITH — REGISTERED PROFESSIONAL

Michael J. Smith

H:\proj\oc16\0432\26\oc0426t1.dgn 7/10/2007

DISTRICT	COUNTY	ROUTE	SECTION	SHEET
10-0	ARMSTRONG	1038	150	2 OF 9
EAST FRANKLIN TWP., WEST KITTANNING & APPLEWOLD BORO.'S				

REVISION NUMBER	REVISIONS	DATE	BY

TEMPORARY AND PERMANENT BMP CONTROL FACILITIES FOR USE BEFORE, DURING AND AFTER EARTH DISTURBANCE ACTIVITIES (CONT.)

SILT BARRIER FENCE

SILT BARRIER FENCE PLACED DURING CONSTRUCTION WILL MEET THE FOLLOWING CRITERIA:

SILT BARRIER FENCE WILL BE PLACED AT LEVEL GRADE. BOTH ENDS OF A FENCE SECTION WILL BE EXTENDED UP THE SLOPE SO THAT THE BOTTOM OF THE FENCE ENDS AT THE TOP OF THE FENCE ELEVATION.

SILT BARRIER FENCE WILL BE DESIGNED TO CONTROL RUNOFF FROM DRAINAGE AREAS THAT DO NOT EXCEED THE MAXIMUM SLOPE-TO-SLOPE LENGTH RELATIONSHIPS SHOWN BELOW.

TABLE 2 - MAXIMUM SLOPE LENGTH (FT.)

TABLE 2
MAXIMUM SLOPE LENGTH (FT) ABOVE FENCE

SLOPE - PERCENT	18" HIGH FENCE	30" HIGH FENCE	SUPER SILT FENCE
2 (OR LESS)	250	500	1000
5	100	250	500
10	50	150	300
15	35	100	—
20	25	70	200
25	20	55	—
30	15	45	100
35	15	40	—
40	15	35	75
45	10	30	—
50	10	25	50

THE FORMATION OF CONCENTRATED FLOWS IS NOT PERMITTED ON THE DRAINAGE SLOPE ABOVE A SILT BARRIER FENCE INSTALLATION. IF CONCENTRATED FLOWS DO OCCUR, DIRECT SLOPE STABILIZATION MEASURES MUST BE EMPLOYED TO PREVENT SUCH CONDITIONS.

SILT BARRIER FENCES WILL NOT BE PLACED IN ANY AREA OF CONCENTRATED FLOWS SUCH AS SWALES, CHANNELS, ETC.

SILT BARRIER FENCES WILL NOT BE USED IN AREAS WHERE ROCK OR ROCKY SOILS PREVENT FULL AND UNIFORM ANCHORING OF THE FENCE TOE.

SILT BARRIER FENCE MATERIAL WILL NOT BE PLACED ACROSS ENTRANCES TO PIPES OR CULVERTS AND WILL NOT BE WRAPPED AROUND THE PRINCIPAL SPILLWAY STRUCTURES OF THE SEDIMENT TRAPS OR THE SEDIMENT BASIN.

TYPICAL SILT BARRIER FENCE DIMENSIONS, POST SPACINGS, AND EMBEDMENT DEPTHS ARE SHOWN ON THE TYPICAL DRAWING IN RC-70M.

DEFINITION OF STABILIZATION

STABILIZATION WILL OCCUR IN ACCORDANCE WITH CHAPTER 102, RULES AND REGULATIONS, SECTIONS 102.22 AND 102.23. A SITE WILL BE CONSIDERED PERMANENTLY STABILIZED WHEN ALL PERMANENT CONTROL MEASURES/FACILITIES HAVE BEEN (1) COMPLETED AND OPERATIONAL AND (2) UNIFORM EROSION-RESISTANT PERENNIAL VEGETATION IS ESTABLISHED WHERE THE SURFACE SOIL IS CAPABLE OF RESISTING EROSION DURING RUNOFF EVENTS. THIS ALSO INCLUDES ROCK LINING, PAVEMENT, AND GRAVEL. INTERIM EROSION AND SEDIMENT POLLUTION CONTROLS, SUCH AS SEDIMENT FILTERS AND SILT FENCE, WILL BE UTILIZED UNTIL PERMANENT STABILIZATION HAS OCCURRED.

VEGETATIVE SURFACE STABILIZATION

VEGETATIVE SURFACE STABILIZATION WILL BE REQUIRED AS LISTED IN SECTIONS 804 AND 805 OF PENNDOT PUBLICATION 408, 2007, FOR DENUDED AREAS, SWALES, AND IN THE CONSTRUCTION OF EMBANKMENT CUT AND FILL SLOPES IN LIFTS OF 15 FEET. ALL AREAS DISTURBED BY CONSTRUCTION THAT ARE NOT STABILIZED WITH PAVEMENT OR ROCK LINING MUST BE SEEDED AND MULCHED.

ALL PERMANENT SWALES, PERMANENT CHANNELS, AND TEMPORARY CHANNELS WITHIN AND ALONG THE ROADWAY WILL BE SEEDED AND MULCHED IN ACCORDANCE WITH PENNDOT PUBLICATION 408, SECTIONS 804, 805, AND 806, 2007. THE SPECIFIC LOCATIONS FOR EACH AREA WILL BE DESIGNATED ON THE EROSION AND SEDIMENT POLLUTION CONTROL PLAN SHEETS AND THE EROSION AND SEDIMENT POLLUTION CONTROL NARRATIVE.

INSTALLATION:

FORMULA B SEEDING AND SOIL SUPPLEMENT, INCLUDING STRAW MULCH AT 1200 LB./1,000 S.Y., IS TO BE PLACED ON LAWN AREAS WITH SLOPES FLATTER THAN 3:1.

SEEDING RATES: FORMULA B = 21.0 LBS./1,000 S.Y.
UNIFORMLY CONSISTING OF:
PERENNIAL RYE GRASS, 4.0 LBS./1,000 S.Y.
CREEPING RED FESCUE OR CHEWINGS
6.0 LBS./1,000. S.Y.
KENTUCKY BLUEGRASS MIXTURE
11.0 LBS./1,000 S.Y.

FORMULA D SEEDING AND SOIL SUPPLEMENT, INCLUDING STRAW MULCH AT 1200 LBS./1,000 S.Y., IS TO BE PLACED ON SLOPES FLATTER THAN 3:1 WHERE MOWING MAY OR MAY NOT BE DESIGNATED.

SEEDING RATES: FORMULA D = 21.0 LBS./1,000 S.Y.
UNIFORMLY CONSISTING OF:
TALL FESCUE 15.0 LBS./1,000 S.Y.
CREEPING RED FESCUE OR CHEWINGS
FESCUE 6.0 LBS./1,000 S.Y.

FORMULA E SEEDING AND SOIL SUPPLEMENT, INCLUDING HAY MULCH AT 1200 LB./1,000 S.Y., IS TO BE PLACED IN AREAS REQUIRING TEMPORARY SEEDING.

SEEDING RATES: FORMULA E = 10.0 LBS./1,000 S.Y.
UNIFORMLY CONSISTING OF:
ANNUAL RYE GRASS, 10.0 LBS./1,000 S.Y.

FORMULA L SEEDING AND SOIL SUPPLEMENT, INCLUDING BONDED FIBER MATRIX SPRAY ON EROSION CONTROL BLANKET, IS TO BE PLACED ON LOW MAINTENANCE SLOPE AREAS AND ON FLATTER AREAS THAT WILL NOT BE MOWED MORE THAN TWO TIMES A YEAR.

SEEDING RATES: FORMULA L = 24.0 LBS./1,000 S.Y.
UNIFORMLY CONSISTING OF:
HARD FESCUE MIXTURE 13.0 LBS./1,000 S.Y.
CREEPING RED FESCUE 85 LBS./1,000 S.Y.
ANNUAL RYE GRASS 2.5 LBS./1,000 S.Y.

SEED AND MULCH ALL FINISHED CHANNELS, SWALES, AND SLOPES.

ROCK APRON OUTLET PROTECTION

ROCK OUTLET PROTECTION WILL BE CONSTRUCTED IN ACCORDANCE WITH THE PLAN DETAIL SHEET AND CALCULATIONS IN APPENDIX C. THE ROCK OUTLET PROTECTION IS DESIGNED TO STOP EROSION AT THE END OF CULVERTS AND STORM DRAINS.

SEDIMENT FILTER BAGS

PROPOSED SEDIMENT FILTER BAGS HAVE BEEN UTILIZED TO TRAP SAND, SILT, AND FINES FROM PUMPED WATER. SEDIMENT FILTER BAGS WILL BE INSTALLED IN ACCORDANCE WITH THE DETAILS IN THE EROSION AND SEDIMENT POLLUTION CONTROL PLAN AND STANDARD DRAWING RC-70M OF PENNDOT PUBLICATION 72. SEDIMENT FILTER BAGS WILL BE SIZED USING MANUFACTURER'S SPECIFICATIONS.

GRAVEL FILTERS FOR AREA AND CURB INLETS

PROPOSED GRAVEL FILTERS FOR AREA/CURB INLETS HAVE BEEN UTILIZED WHERE HEAVY CONCENTRATED FLOWS ARE EXPECTED BUT NOT WHERE PONDING AROUND THE STRUCTURE MIGHT CAUSE EXCESSIVE INCONVENIENCE OR DAMAGE TO ADJACENT STRUCTURES AND UNPROTECTED AREAS.

INLET SEDIMENT FILTERS WILL BE INSTALLED USING WIRE MESH FABRIC WITH 1/4-INCH OPENINGS AND NO. 57 COARSE AGGREGATE AS SPECIFIED IN SECTIONS 865.2(B) AND 703.2 OF THE PENNDOT SPECIFICATIONS, PUBLICATION 408, 2007, AND IN ACCORDANCE WITH THE DETAILS IN THE EROSION AND SEDIMENT POLLUTION CONTROL PLAN SHEETS.

MAINTENANCE PROGRAM FOR BMP CONTROL FACILITIES DURING CONSTRUCTION

DURING CONSTRUCTION ACTIVITIES, INSPECT AND MAINTAIN ALL EROSION AND SEDIMENT POLLUTION CONTROL DEVICES.

ROCK CONSTRUCTION ENTRANCES

CONSTANTLY MAINTAIN THE ROCK CONSTRUCTION ENTRANCE THICKNESS TO THE SPECIFIED DIMENSION BY ADDING ROCK. MAINTAIN A STOCKPILE OF ROCK MATERIAL ON THE SITE FOR THIS PURPOSE. AT THE END OF EACH CONSTRUCTION DAY, ALL SEDIMENT DEPOSITED ON PUBLIC ROADWAYS WILL BE REMOVED AND RETURNED TO THE CONSTRUCTION SITE. WASHING OF THE ROADWAY WITH WATER IS NOT PERMITTED.

SILT BARRIER FENCE

INSPECT THE SILT BARRIER FENCE WEEKLY AND AFTER ANY PRECIPITATION EVENT. AFTER REVIEWING THE RESULTS OF THE INSPECTION WITH THE ENGINEER, IMMEDIATELY CLEAN, REPAIR, OR REPLACE ALL SILT BARRIER FENCE FOUND TO BE IN UNSATISFACTORY CONDITION.

REMOVE AND DISPOSE OF AT AN APPROVED UPLAND LOCATION ANY ACCUMULATED SEDIMENT WHEN IT REACHES ONE-HALF (1/2) THE ABOVE-GROUND HEIGHT OF THE FENCE. REPAIR IMMEDIATELY, WITH A ROCK OUTLET FILTER, ALL UNDERCUTTING OR EROSION OF THE TOE ANCHOR. ADHERE TO ANY MANUFACTURER'S RECOMMENDATIONS FOR REPLACING THE SILT BARRIER FENCE DUE TO WEATHERING.

VEGETATIVE SURFACE STABILIZATION

PERMANENT VEGETATED AREAS WILL BE INSPECTED AFTER EACH RUNOFF EVENT UNTIL A UNIFORM EROSION RESISTANT COVER OF AT LEAST 70 PERCENT. MAINTENANCE WILL ALSO BE IN ACCORDANCE WITH PENNDOT PUBLICATION 408, 2007.

ROCK APRON OUTLET PROTECTION

INSPECT THE ROCK APRON OUTLET PROTECTION WEEKLY AND AFTER EVERY RUNOFF EVENT. INSPECT FOR EROSION AND LOOSE ROCK AT THE OUTLETS AND ROCK BASINS. IF NEEDED, ADD ROCK TO OUTLET PROTECTION.

PERMANENT MAINTENANCE OPERATIONS

UPON COMPLETION OF THE PROJECT, THE MAINTENANCE OF ALL PERMANENT EROSION AND SEDIMENT POLLUTION CONTROLS WILL BECOME PART OF PENNDOT'S REGULAR MAINTENANCE PROGRAM. THIS WILL INCLUDE PERIODIC INSPECTIONS (AT LEAST ONCE A YEAR) OF FACILITIES AND ALL REQUIRED REPAIRS.

OTHER REGULATIONS

COMPLY WITH THE REQUIREMENTS OF TITLE 25 - RULES AND REGULATIONS: PART I -DEPARTMENT OF ENVIRONMENTAL PROTECTION, SUBPART C - PROTECTION OF NATURAL RESOURCES, ARTICLE II - WATER RESOURCES, CHAPTER 102 - EROSION CONTROL. IN THE EVENT OF A CONFLICT BETWEEN THESE REQUIREMENTS AND THE POLLUTION CONTROL LAWS, RULES, OR REGULATIONS OF OTHER FEDERAL, STATE, OR LOCAL AGENCIES, THE MORE RESTRICTIVE LAWS, RULES, OR REGULATIONS WILL APPLY.

DRAWN BY	SGM
CHECKED BY	JLS

A-00122496

EROSION AND SEDIMENT POLLUTION CONTROL PLAN GENERAL NOTES

DISTRICT	COUNTY	ROUTE	SECTION	SHEET
10-0	ARMSTRONG	1038	150	3 OF 9
EAST FRANKLIN TWP., WEST KITTANNING & APPLEWOLD BORO.'S				

REVISION NUMBER	REVISIONS	DATE	BY

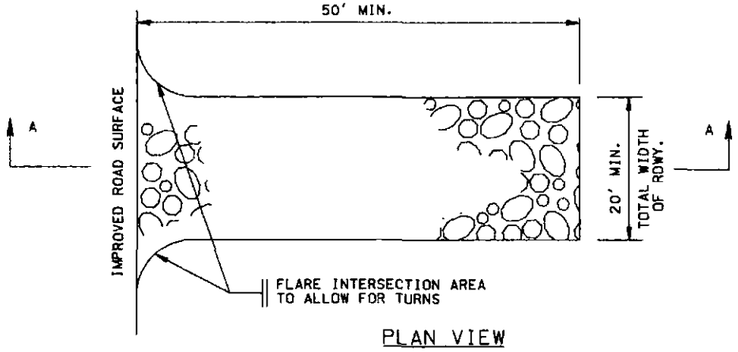

PLAN VIEW

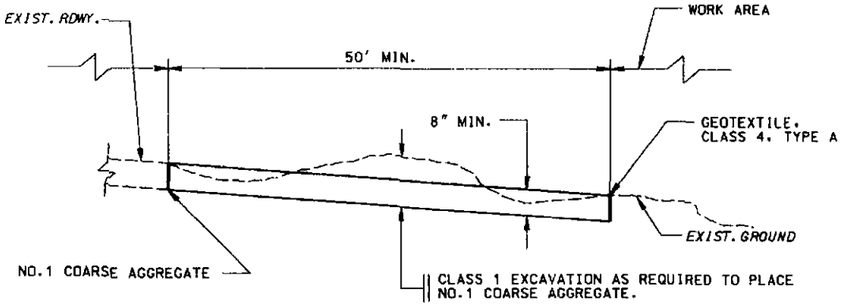

SECTION A-A

ROCK CONSTRUCTION ENTRANCE

ITEM 0203-0001 - CLASS 1 EXCAVATION
ITEM 0212-0014 - GEOTEXTILE, CLASS 4, TYPE A
ITEM 0703-0020 - NO. 1 COARSE AGGREGATE

NOTE:

1. ROCK CONSTRUCTION ENTRANCE THICKNESS SHALL BE CONSTANTLY MAINTAINED TO THE SPECIFIED DIMENSIONS BY ADDING ROCK. A STOCKPILE SHALL BE MAINTAINED ON SITE FOR THIS PURPOSE. AT THE END OF EACH CONSTRUCTION DAY, ALL SEDIMENT DEPOSITED ON PAVED ROADWAYS SHALL BE REMOVED AND RETURNED TO THE CONSTRUCTION SITE.

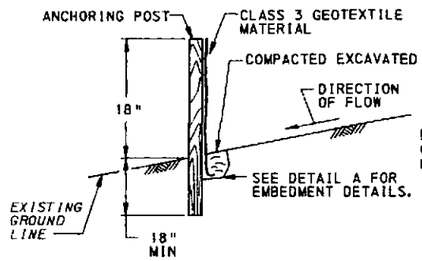

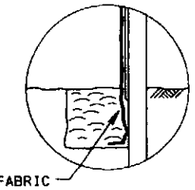

DETAIL A

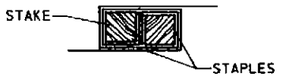

JOINING FENCE SECTIONS

SILT BARRIER FENCE 18" HEIGHT

ITEM NO. 0865-0001

TABLE A
SILT BARRIER FENCE
GEOTEXTILE SELECTION

TYPE OF CLASS 3 GEOTEXTILE MATERIAL	NOMINAL FABRIC HEIGHT	MAX POST SPACING WITHOUT MESH SUPPORT	MAX POST SPACING WITH MESH SUPPORT
3A	18"	8'-0"	NA
3A	30"	NA	8'-0"
3B	18"	4'-0"	NA
3B	30"	NA	4'-0"

NA = NOT APPLICABLE

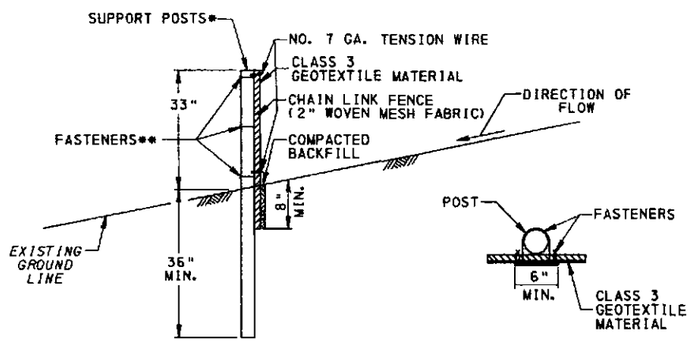

JOINING FENCE SECTIONS

* POSTS SPACED @ 10' MAX. USE 2 ½" DIA. GALVANIZED STEEL OR ALUMINUM POSTS.

** CHAIN LINK TO POST FASTENERS SPACED @ 14" MAX. USE NO 6 GA. ALUMINUM WIRE OR NO. 9 GALVANIZED PRE-FORMED CLIPS. CHAIN LINK TO TENSION WIRE FASTENERS SPACED @ 60" MAX. USE NO. 10 GA. GALVANIZED STEEL WIRE. CLASS 3 GEOTEXTILE MATERIAL TO CHAIN LINK FENCE WITH FASTENERS SPACED @ 24" MAX. C TO C.

NO. 7 GA. TENSION WIRE INSTALLED HORIZONTALLY AT TOP AND BOTTOM OF CHAIN-LINK FENCE.

SILT BARRIER FENCE MUST BE PLACED AT EXISTING LEVEL GRADE BOTH ENDS OF THE FENCE MUST BE EXTENDED AT LEAST 8' UPSLOPE AT 45° TO MAIN FENCE ALIGNMENT.

SEDIMENT MUST BE REMOVED WHEN ACCUMULATIONS REACH ½THE ABOVE GROUND HEIGHT OF THE FENCE.

SUPER SILT BARRIER FENCE

ITEM 9865-0001

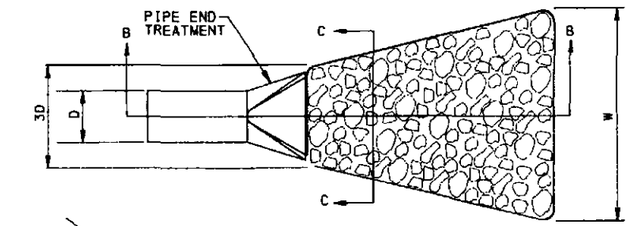

PLAN

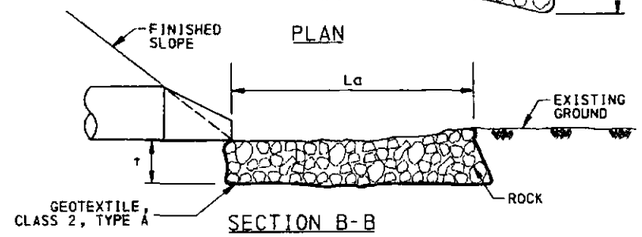

SECTION B-B

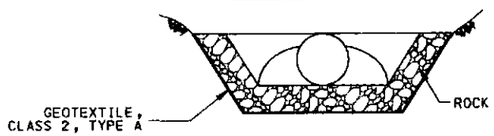

SECTION C-C

ROCK APRON OUTLET PROTECTION

FOR ACTUAL DIMENSIONS OF ROCK APRONS SEE THE INFORMATIONAL TABULATIONS SHEET

A-00122496

EROSION AND SEDIMENT POLLUTION CONTROL PLAN DETAILS NOT TO SCALE

DRAWN BY	SGM
CHECKED BY	JLS

COMMONWEALTH OF PENNSYLVANIA REGISTERED PROFESSIONAL MICHAEL J. MUTH ENGINEER

N:\projects\0432\es\esde101.dgn 1/10/2007

DISTRICT	COUNTY	ROUTE	SECTION	SHEET
10-0	ARMSTRONG	1038	150	4 OF 9
EAST FRANKLIN TWP., WEST KITTANNING & APPLEWOLD BORO.'S				

REVISION NUMBER	REVISIONS	DATE	BY

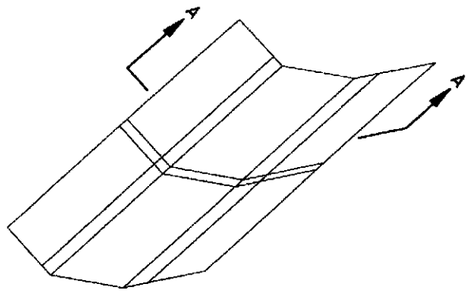

LINING INSTALLATION

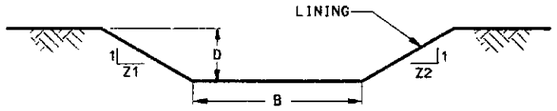

CHANNEL SECTION A-A

VEGETATED CHANNELS
NOT TO SCALE

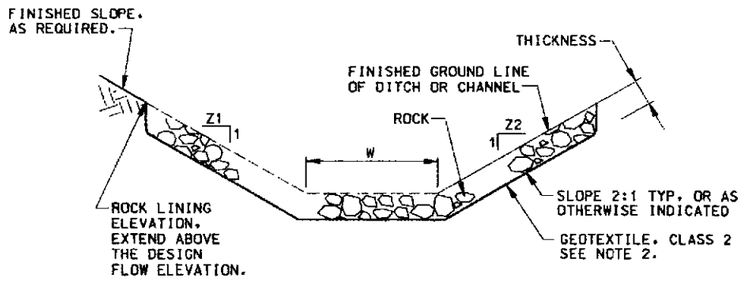

CHANNEL SECTION A-A

ROCK-LINED CHANNELS

PERMANENT CHANNEL LININGS

NOTES:

1. PROVIDE GEOTEXTILE MATERIAL MEETING THE REQUIREMENTS OF PUBLICATION 408/2007, SECTION 735 AND FURNISH AND INSTALL IN ACCORDANCE WITH SECTION 212.
2. PROVIDE GEOTEXTILE, CLASS 2, TYPE A ALONG ALL INTERFACE AREAS WITH GROUND CONTACT.
3. ROCK SIZE AS PER DESIGN DRAWINGS. NOMINAL PLACEMENT THICKNESS AS PER PUBLICATION 408/2007, SECTION 850.
4. SEE THE INFORMATIONAL TABULATION SHEET 17 FOR TEMPORARY AND PERMANENT CHANNEL LINING TYPES AND DIMENSIONS.

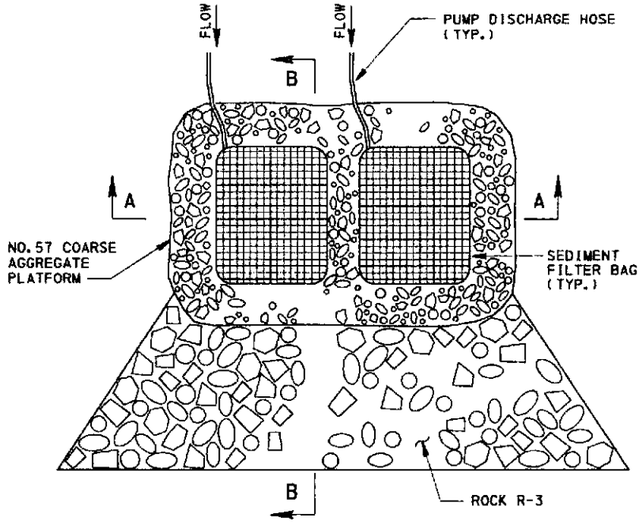

PLAN

SEDIMENT FILTER BAG
ITEM NO. 9858-0002

NO.	ROUTE	LOCATION
SB-1	SR 1038	STA. 1957+50, ℄
SB-2	SR 1038	STA. 1961+00, LT

NOTES:

1. FILTER BAGS MAY BE USED ON LOW VOLUME DEWATERING OPERATIONS NOT TO EXCEED 1000 GALLONS PER MINUTE.
2. CLEAR SITE BUT DO NOT GRUB.
3. INSPECT AREA TO DETERMINE PATH DISCHARGE WATER WILL TAKE. STABILIZE ANY POTENTIALLY ERODIBLE AREAS (STEEP SLOPES).
4. CONSTRUCT COARSE AGGREGATE PLATFORM SURFACE LEVEL. PLACE SEDIMENT FILTER BAG ON STABILIZED AREA.
5. IF THE EXISTING AREA IS STABILIZED, STRAW MAY BE USED INSTEAD OF #57 COARSE AGGREGATE. PLACE BAG OVER STRAW DISTRIBUTED AT THE RATE OF 1 BALE PER 30 SQ. FT.
6. USE PUMP WITH A RATING IN GALLONS PER MINUTE NOT TO EXCEED 50% OF THE MAXIMUM FLOW RATE LISTED ON THE BAG LABEL. DOUBLE CLAMP THE PUMP DISCHARGE HOSE FIRMLY TO THE BAG.
7. MONITOR AND EVALUATE THE ENTIRE PUMPING OPERATION TO ASSURE THAT THE BAG CONTINUES TO FUNCTION PROPERLY. REPLACE THE BAG WHEN THE CONTAINED SILT REDUCES THE BAGS FLOW TO APPROXIMATELY 50% OF THE RATE OF INITIAL DISCHARGE, OR WHEN DIRECTED BY THE INSPECTOR-IN-CHARGE. DISPOSE OF SEDIMENT IN A MANNER SATISFACTORY TO THE ENGINEER. RESTORE THE AREA AS SPECIFIED IN SECTION 105.14.

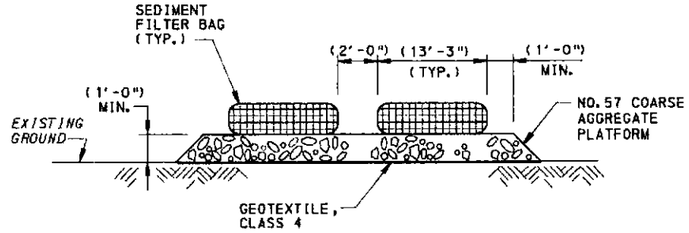

SECTION A-A

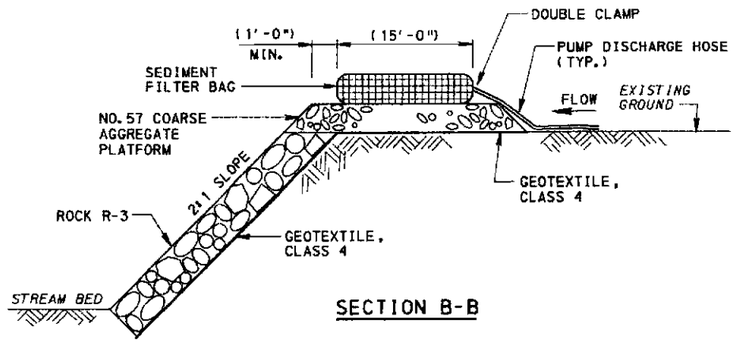

SECTION B-B

A-00122496

EROSION AND SEDIMENT POLLUTION CONTROL PLAN DETAILS
NOT TO SCALE

DRAWN BY	SGM
CHECKED BY	JLS

COMMONWEALTH OF PENNSYLVANIA REGISTERED PROFESSIONAL MICHAEL J. MUTH

DISTRICT	COUNTY	ROUTE	SECTION	SHEET
10-0	ARMSTRONG	1038	150	5 OF 9
EAST FRANKLIN TWP., WEST KITTANNING & APPLEWOLD BORO.'S				

REVISION NUMBER	REVISIONS	DATE	BY

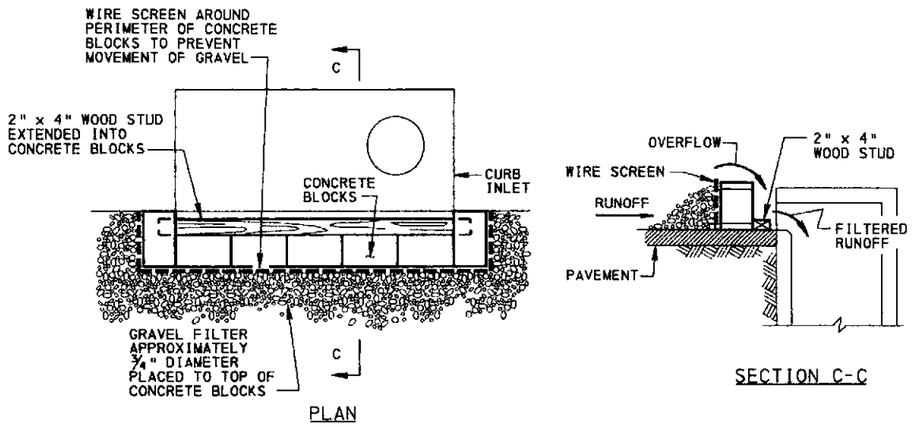

GRAVEL FILTER FOR CURB INLET

ITEM NO. 9000-0051

NOTES:

1. GRAVEL FILTERS MAY BE USED ON PAVEMENT OR BARE GROUND.
2. ALL GRAVEL FILTERS INSTALLED AROUND AREA DRAINS SHOULD BE INSPECTED AND REPAIRED AFTER EACH RUNOFF EVENT. SEDIMENT SHOULD BE REMOVED WHEN MATERIAL IS WITHIN 25 (4") OF THE TOP OF THE CONCRETE BLOCKS. PERIODICALLY, THE GRAVEL SHOULD BE RAKED TO INCREASE INFILTRATION AND FILTERING OF RUNOFF WATERS.
3. SEDIMENT SHOULD BE REMOVED IMMEDIATELY FROM ANY TRAVELED WAY OF ROADS AND STREETS.

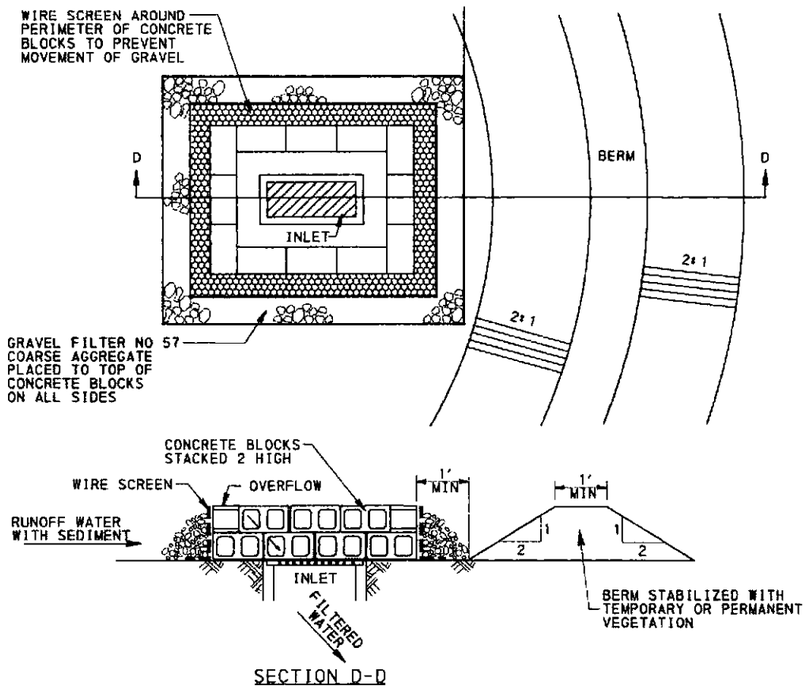

GRAVEL FILTER FOR AREA INLET

ITEM NO. 9000-0050

NOTES:

1. GRAVEL FILTERS MAY BE USED ON PAVEMENT OR BARE GROUND.
2. ALL GRAVEL FILTERS INSTALLED AROUND CURB INLETS AND AREA DRAINS SHOULD BE INSPECTED AND REPAIRED AFTER EACH RUNOFF EVENT. SEDIMENT SHOULD BE REMOVED WHEN MATERIAL IS WITHIN FOUR INCHES OF THE TOP OF THE CONCRETE BLOCKS. PERIODICALLY, THE GRAVEL SHOULD BE RAKED TO INCREASE INFILTRATION AND FILTERING OF RUNOFF WATERS.
3. SEDIMENT SHOULD BE REMOVED IMMEDIATELY FROM ANY TRAVELED WAY OF ROADS AND STREETS.
4. PROVIDE VEGETATIVE EARTHEN BERM 2' HIGH, TOP WIDTH OF 1', AND SIDE SLOPES OF 2:1 TO DIRECT WATER INTO INLET UNTIL ROADWAY IS STONED OR PERMANENTLY STABILIZED. PROVIDE 6" MINIMUM HEIGHT ASPHALT BERM TO DIRECT WATER INTO INLET UNTIL ROADWAY SURFACE RECEIVES PAVEMENT, UNLESS TRAVELWAY WILL BE ADVERSELY AFFECTED.
5. DO NOT CONSTRUCT EARTHEN BERM ON INLETS IN A SUMP CONDITION.

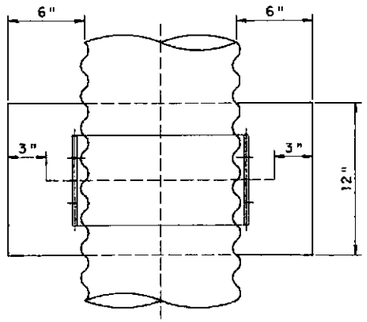

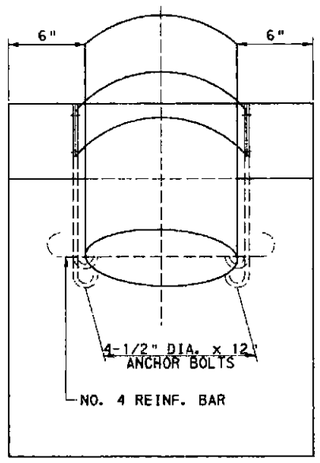

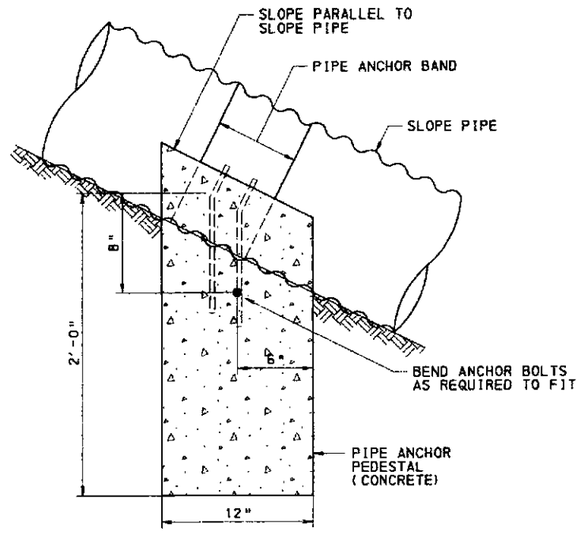

PIPE ANCHOR FOR ABOVE GROUND INSTALLATION

NOTE: PLACE ONE PIPE ANCHOR FOR ABOVE GROUND INSTALLATION AT EACH PIPE JOINT OR AS DIRECTED BY THE REPRESENTATIVE WHEN INSTALLING PIPES ON THE SURFACE OF SLOPES.

A-00122496

EROSION AND SEDIMENT POLLUTION CONTROL PLAN DETAILS NOT TO SCALE

DRAWN BY	SGM
CHECKED BY	JLS

COMMONWEALTH OF PENNSYLVANIA REGISTERED PROFESSIONAL MICHAEL J. MUTH ENGINEER

DISTRICT	COUNTY	ROUTE	SECTION	SHEET
10-0	ARMSTRONG	1038	150	6 OF 9
EAST FRANKLIN TWP., WEST KITTANNING & APPLEWOLD BORO.'S				

REVISION NUMBER	REVISIONS	DATE	BY

PERMANENT/TEMPORARY AND EXISTING CHANNEL TABULATIONS

SWALE NO.	BOTTOM WIDTH (ft)	SIDE SLOPE Z1 H:V	SIDE SLOPE Z2 H:V	MIN. CONSTR. DEPTH (ft)	LINING TYPE	LINING THICKNESS (ft)	VELOCITY (ft/s)	Q (cfs)	SLOPE (ft/ft)	CHANNEL REMARKS	SIDE	STATION	ROUTE
PS-1	4*	4:1*	4:1*	0.75	VEGETATIVE FORMULA D	N/A	0.97	1.11	0.0040	USE EROSION CONTROL MAT	LT	1958+78 TO 1961+08	1038
PS-2	0	4:1*	2:1	0.75	VEGETATIVE FORMULA D	N/A	1.38	0.29	0.0200	USE ECM TO START VEGETATIVE LINING	LT	1961+75 TO 1960+30	1038
PS-3	0	4:1*	4:1*	1.00	VEGETATIVE FORMULA D	N/A	0.70	0.23	0.0040	USE EROSION CONTROL MAT	LT	1958+92 TO 1961+28	1038
PS-4	2	10:1	4:1	1.50	VEGETATIVE FORMULA D	N/A	2.07	10.12	0.0040	USE EROSION CONTROL MAT	LT	1958+60 TO 1956+57	1038
PS-5	0	10:1	2:1	1.00	VEGETATIVE FORMULA D	N/A	1.01	0.77	0.0060	USE EROSION CONTROL MAT	L/R	1958+82 TO 1957+24	1038
PS-6	2	4:1	10:1	1.50	VEGETATIVE FORMULA D	N/A	2.18	10.52	0.0045	USE EROSION CONTROL MAT	L/R	1956+56 TO 1956+08	1038
PS-7	0	10:1*	2:1*	1.00	VEGETATIVE FORMULA D	N/A	0.89	0.54	0.0050	USE EROSION CONTROL MAT	RT	1957+20 TO 1956+30	1038
PS-8	2	4:1	10:1	1.00	VEGETATIVE FORMULA D	N/A	1.34	2.36	0.0045	USE EROSION CONTROL MAT	RT	1956+04 TO 1954+92	1038
PS-9	2	10:1	10:1	0.75	VEGETATIVE FORMULA D	N/A	0.39	0.13	0.0050	USE EROSION CONTROL MAT	RT	1956+26 TO 1955+02	1038
PS-10	2	3:1	10:1	1.25	VEGETATIVE FORMULA D	N/A	1.65	3.72	0.0050	USE EROSION CONTROL MAT	RT	1954+88 TO 1953+54	1038
PS-11	2	10:1	10:1	0.75	VEGETATIVE FORMULA D	N/A	0.47	0.19	0.0050	USE EROSION CONTROL MAT	RT	1954+99 TO 1953+59	1038
PS-12	1.9*	1:1	.1:1	0.75	VEGETATIVE FORMULA D	N/A	2.91	4.16	0.0800	USE TRM TO START VEGETATIVE LINING	LT	1952+04 TO 1953+32	1038
PS-13	2.4*	1:1	.1:1	0.75	VEGETATIVE FORMULA D	N/A	3.28	5.84	0.0800	USE TRM TO START VEGETATIVE LINING	LT	1950+81 TO 1951+97	1038
PS-14	2.2*	1:1	.1:1	0.75	VEGETATIVE FORMULA D	N/A	3.20	5.33	0.0800	USE TRM TO START VEGETATIVE LINING	LT	1949+80 TO 1950+72	1038
PS-15	3	1:1	10:1	0.75	VEGETATIVE FORMULA D	N/A	2.14	6.84	0.0800	USE TRM TO START VEGETATIVE LINING	LT	1948+58 TO 1949+72	1038
PS-16	3	1:1	10:1	0.75	VEGETATIVE FORMULA D	N/A	2.51	9.33	0.0800	USE TRM TO START VEGETATIVE LINING	LT	1948+25 TO 1948+48	1038

* VARIES

NOTE: THE SHEAR STRESS LINING METHOD WAS UTILIZED TO DESIGN ALL PERMANENT CHANNELS EXCEEDING A SLOPE OF 0.1 FT./FT. SEED TEMPORARY SWALE FLEXIBLE LININGS WITH SEEDING AND SOIL SUPPLEMENTS - FORMULA D.

PS-1 - PERMANENT CHANNEL
TRM - TURF REINFORCEMENT MAT

OUTLET PROTECTION TABULATIONS

OUTLET NO.	PIPE DIAMETER (FT)	SLOPE (FT/FT)	TAILWATER (DIA)	Q (CFS)	VELOCITY (FT/S)	ROCK CLASS	La (FT)	W (FT)	BLANKET THICKNESS (FT)	REMARKS	LOCATION	ROUTE
A-O	3.00	0.083	< 0.5*DIA	57.739	26.56	N/A	N/A	N/A	N/A	OUTLET TO EXISTING CUT STONE	1963+27.29 LT	1038
A-6a	1.00	0.200	< 0.5*DIA	0.730	10.91	R-5	8	12.5	2.25	CPP, OUTLET TO PS-1	1958+85.00 LT	4025
B-O	2.50	0.167	< 0.5*DIA	0.740	5.58	R-4	8	15.5	1.50	CMP, EXISTING TO REMAIN	30+82.37 LT	**
C-O	1.50	0.040	< 0.5*DIA	0.234	5.74	R-4	8	12.5	1.50	CMP, EXISTING TO REMAIN	1963+09.74 RT	1038
D-O	1.00	0.040	< 0.5*DIA	4.320	10.99	R-5	6	9	2.25	SECTION AT WALL TO BE REPLACED	1956+57.66 LT	1038

** ALLEGHENY AVENUE

NOTES: 1. MINIMUM ROCK SIZE OF R-4 UTILIZED FOR OUTLET PROTECTION.
2. ALL PIPES ARE REINFORCED CONCRETE (RCP) UNLESS OTHERWISE NOTED.
3. PIPE SLOPE TO BE VERIFIED BY CONTRACTOR.

GABION MATTRESS TABULATION

STATION	SIDE	ROUTE	W_G	L_G	H_G	ROCK	REMARKS
1958+30	LT	1038	6'-0"	12'-0"	0'-9"	R-5	INSTALL AS PER RC-43M

INLET PROTECTION TABULATIONS

GRAVEL FILTERS FOR AREA/CURB INLETS				
INLET	TYPE OF FILTER	SIDE	STATION	ROUTE
A-1	AREA	LT	1962+29.23	1038
A-2	CURB	RT	1961+98.41	1038
A-3	CURB	RT	1959+44.99	1038
A-4	CURB	LT	1959+45.27	1038
A-5	AREA	LT	1961+28.91	1038
A-7	CURB	RT	10+75.00	4025
A-8	CURB	RT	11+25.00	4025
A-9	CURB	LT	10+75.00	4025
A-10	AREA	LT	10+75.00	4025
A-12	AREA	LT	1958+85.58	1038
A-13	AREA	RT	1957+21.70	1038
A-14	AREA	RT	1956+28.12	1038
A-15	AREA	RT	1956+07.01	1038
A-16	AREA	RT	1955+01.51	1038
A-17	AREA	RT	1954+89.82	1038
A-18	AREA	RT	1953+57.38	1038

GRAVEL FILTERS FOR AREA/CURB INLETS				
INLET	TYPE OF FILTER	SIDE	STATION	ROUTE
A-19	AREA	RT	1953+51.70	1038
A-21	CURB	LT	1953+35.02	1038
A-22	AREA	LT	1953+35.02	1038
A-23	CURB	LT	1952+00.00	1038
A-24	CURB	RT	1952+00.00	1038
A-25	AREA	LT	1952+00.00	1038
A-26	CURB	LT	1950+75.00	1038
A-27	CURB	RT	1950+75.00	1038
A-28	AREA	LT	1950+75.00	1038
A-29	CURB	LT	1949+75.00	1038
A-30	AREA	LT	1949+75.00	1038
A-31	CURB	LT	1948+50.00	1038
A-32	AREA	LT	1948+50.00	1038
B-1	CURB	LT	30+72.41	**
B-2	CURB	RT	30+62.25	**
C-1	CURB	RT	1962+96.80	1038

** ALLEGHENY AVENUE

SEEDING AND SOIL SUPPLEMENTS

STATION	SIDE	SEEDING FORMULA	ROUTE	REMARKS
1948+25 TO 1953+50	LT	FORMULA D	1038	SEED CHANNELS AND ALONG ROADWAY
1948+25 TO 1953+90	RT	FORMULA L	1038	SEED ALONG ROADWAY
1953+50 TO 1958+50	LT/RT	FORMULA L	1038	SEED AROUND PIERS
1953+25 TO 1961+25	RT/LT	FORMULA D	1038	SEED CHANNELS AND ALONG RR
1959+50 TO 1961+50	LT/RT	FORMULA L	1038	SEED ROADWAY EMBANKMENTS
1961+50 TO 1963+00	LT/RT	FORMULA D	1038	SEED ALONG ROADWAY

NOTE: FORMULA E SEEDING SHOULD BE PLACED AROUND ALL TEMPORARY E&S CONTROLS INCLUDING SILT FENCING AND ROCK CONSTRUCTION ENTRANCES.

DRAWN BY	SGM
CHECKED BY	JLS

EROSION AND SEDIMENT POLLUTION CONTROL PLAN TABULATIONS

COMMONWEALTH OF PENNSYLVANIA — REGISTERED PROFESSIONAL ENGINEER — MICHAEL J. MUTH

A-00122496

h:\projects\0432\80\ea1b01.dgn 7/10/2001

DISTRICT	COUNTY	ROUTE	SECTION	SHEET
10-0	ARMSTRONG	103B	150	7 OF 9
EAST FRANKLIN TWP., WEST KITTANNING & APPLEWOLD BORO.'S				

REVISION NUMBER	REVISIONS	DATE	BY

SOIL CHARACTERISTICS	
MAP SYMBOL	SOIL TYPE
Po	POPE LOAM
RaB	RAINSBORO SILT LOAM, 3% TO 8% SLOPES
RaC	RAINSBORO SILT LOAM, 8% TO 15% SLOPES
Ur	URBAN LAND
WkF	WEIKERT AND GILPIN SOILS, 25% TO 70% SLOPES

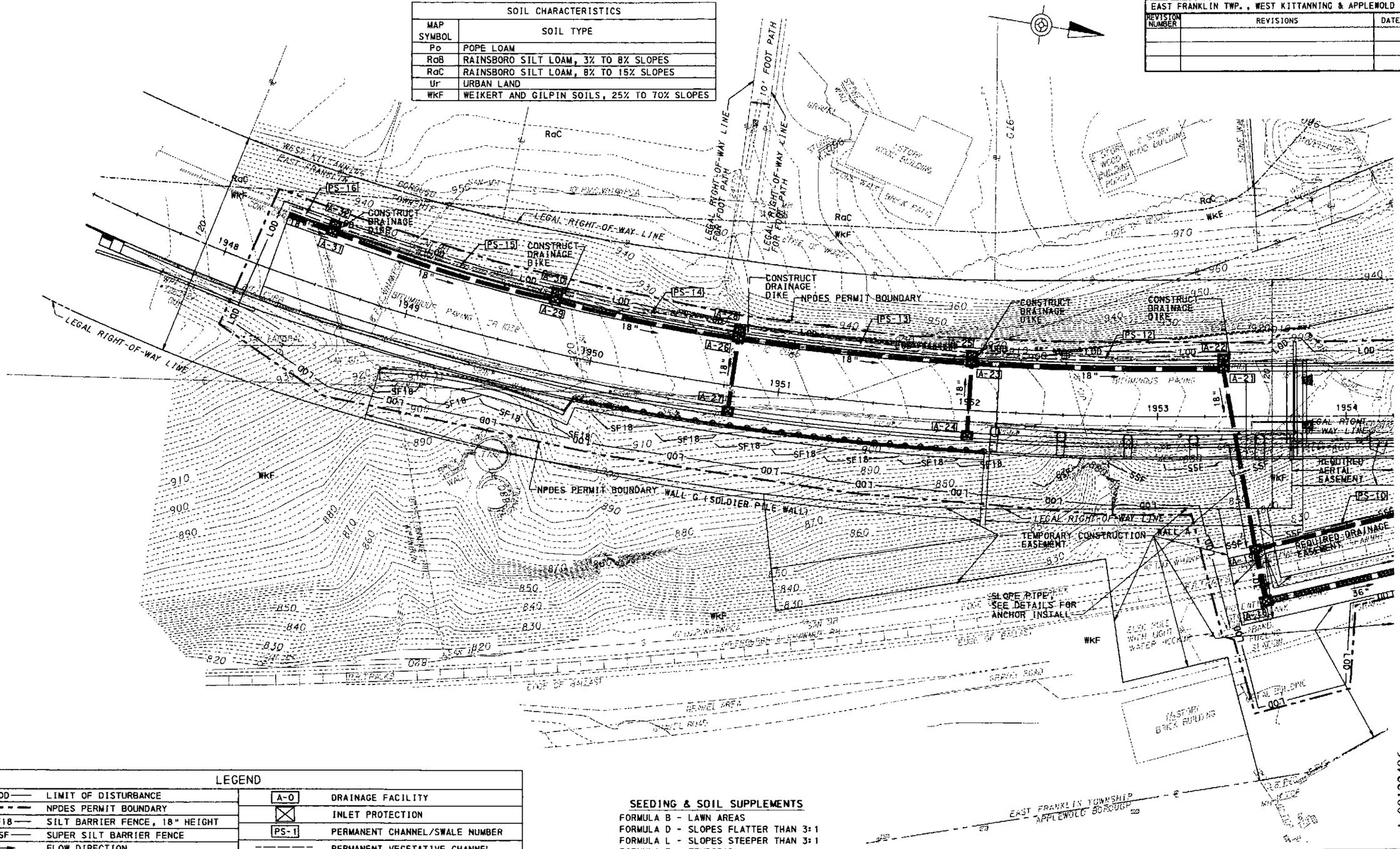

LEGEND			
LOD	LIMIT OF DISTURBANCE	A-0	DRAINAGE FACILITY
	NPDES PERMIT BOUNDARY		INLET PROTECTION
SF18	SILT BARRIER FENCE, 18" HEIGHT	PS-1	PERMANENT CHANNEL/SWALE NUMBER
SSF	SUPER SILT BARRIER FENCE		PERMANENT VEGETATIVE CHANNEL
	FLOW DIRECTION		ROCK APRON
SED BAG	SEDIMENT FILTER BAG		
	ROCK CONSTRUCTION ENTRANCE		

SEEDING & SOIL SUPPLEMENTS

FORMULA B - LAWN AREAS
FORMULA D - SLOPES FLATTER THAN 3:1
FORMULA L - SLOPES STEEPER THAN 3:1
FORMULA E - TEMPORARY

SCALE
25 FEET 0 25 FEET

EROSION AND SEDIMENT POLLUTION CONTROL PLAN

DRAWN BY	SGM
CHECKED BY	JLS

COMMONWEALTH OF PENNSYLVANIA
DEPARTMENT OF TRANSPORTATION
PROFESSIONAL
MICHAEL J. MUTH
ENGINEER IN CHARGE

A-00122496

SEE SHEET 8 OF 9

h:\projects\0432\as\esp1r01.dgn 7/10/2007

DISTRICT	COUNTY	ROUTE	SECTION	SHEET
10-0	ARMSTRONG	1038	150	8 OF 9
EAST FRANKLIN TWP., WEST KITTANNING & APPLEWOLD BORO.'S				

REVISION NUMBER	REVISIONS	DATE	BY

SOIL CHARACTERISTICS	
MAP SYMBOL	SOIL TYPE
Po	POPE LOAM
RaB	RAINSBORO SILT LOAM, 3% TO 8% SLOPES
RaC	RAINSBORO SILT LOAM, 8% TO 15% SLOPES
Ur	URBAN LAND
WkF	WEIKERT AND GILPIN SOILS, 25% TO 70% SLOPES

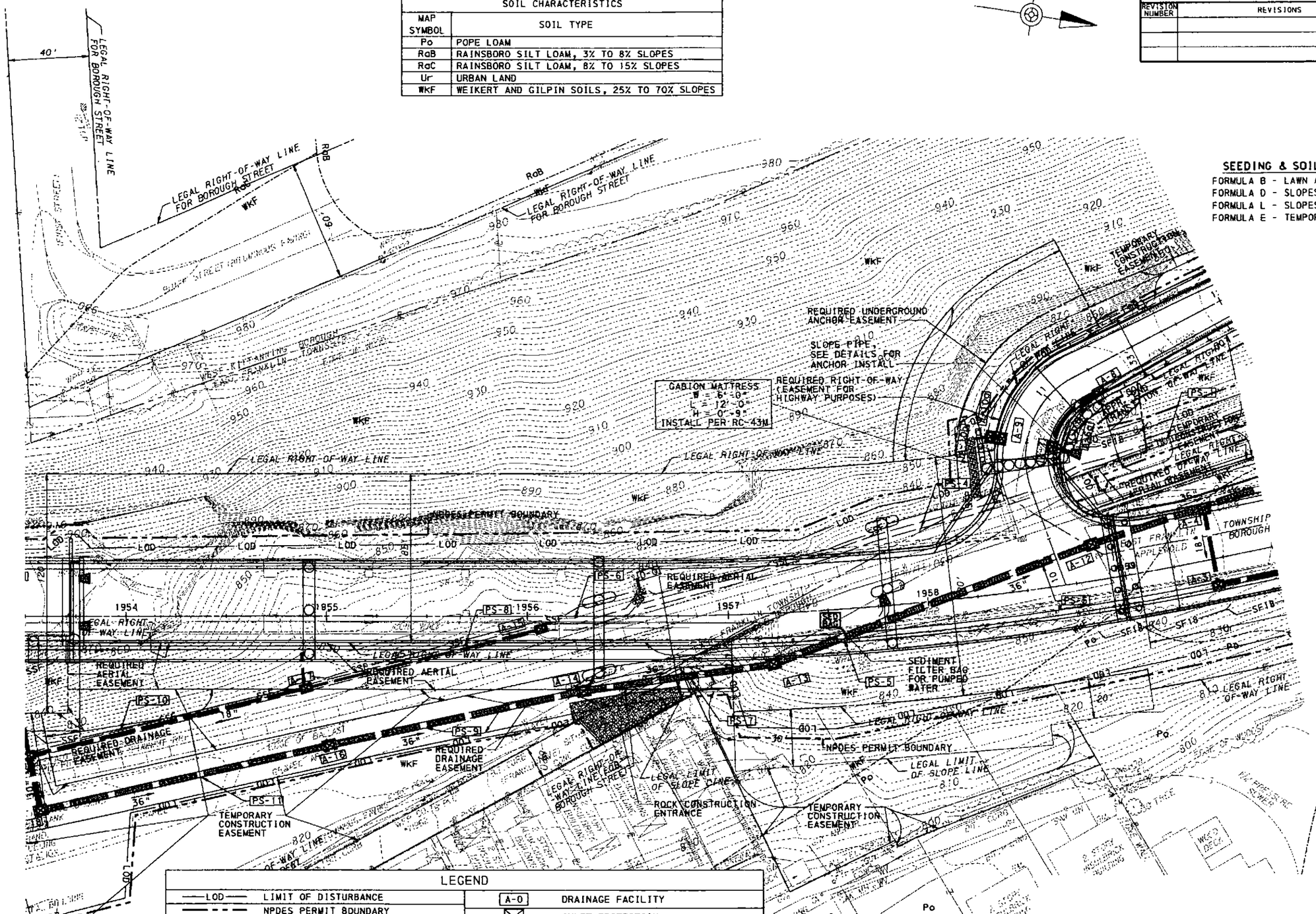

SEEDING & SOIL SUPPLEMENTS

FORMULA B - LAWN AREAS
FORMULA D - SLOPES FLATTER THAN 3:1
FORMULA L - SLOPES STEEPER THAN 3:1
FORMULA E - TEMPORARY

LEGEND			
LOD	LIMIT OF DISTURBANCE	A-0	DRAINAGE FACILITY
	NPDES PERMIT BOUNDARY		INLET PROTECTION
SF18	SILT BARRIER FENCE, 18" HEIGHT	PS-1	PERMANENT CHANNEL/SWALE NUMBER
SSF	SUPER SILT BARRIER FENCE		PERMANENT VEGETATIVE CHANNEL
	FLOW DIRECTION		ROCK APRON
SED BAG	SEDIMENT FILTER BAG		
	ROCK CONSTRUCTION ENTRANCE		

SCALE
25 FEET 0 25 FEET

EROSION AND SEDIMENT POLLUTION CONTROL PLAN

DRAWN BY	SGM
CHECKED BY	JLS

A-00122496

SEE SHEET 7 OF 9
SEE SHEET 9 OF 9

COMMONWEALTH OF PENNSYLVANIA REGISTERED PROFESSIONAL MICHAEL J. MUTH ENGINEER

H:\projects\0432\esl\esapfc2.dgn 7/10/2007

DISTRICT	COUNTY	ROUTE	SECTION	SHEET
10-0	ARMSTRONG	1038	150	9 OF 9

EAST FRANKLIN TWP., WEST KITTANNING & APPLEWOLD BORO.'S

REVISION NUMBER	REVISIONS	DATE	BY

SEE SHEET 8 OF 9

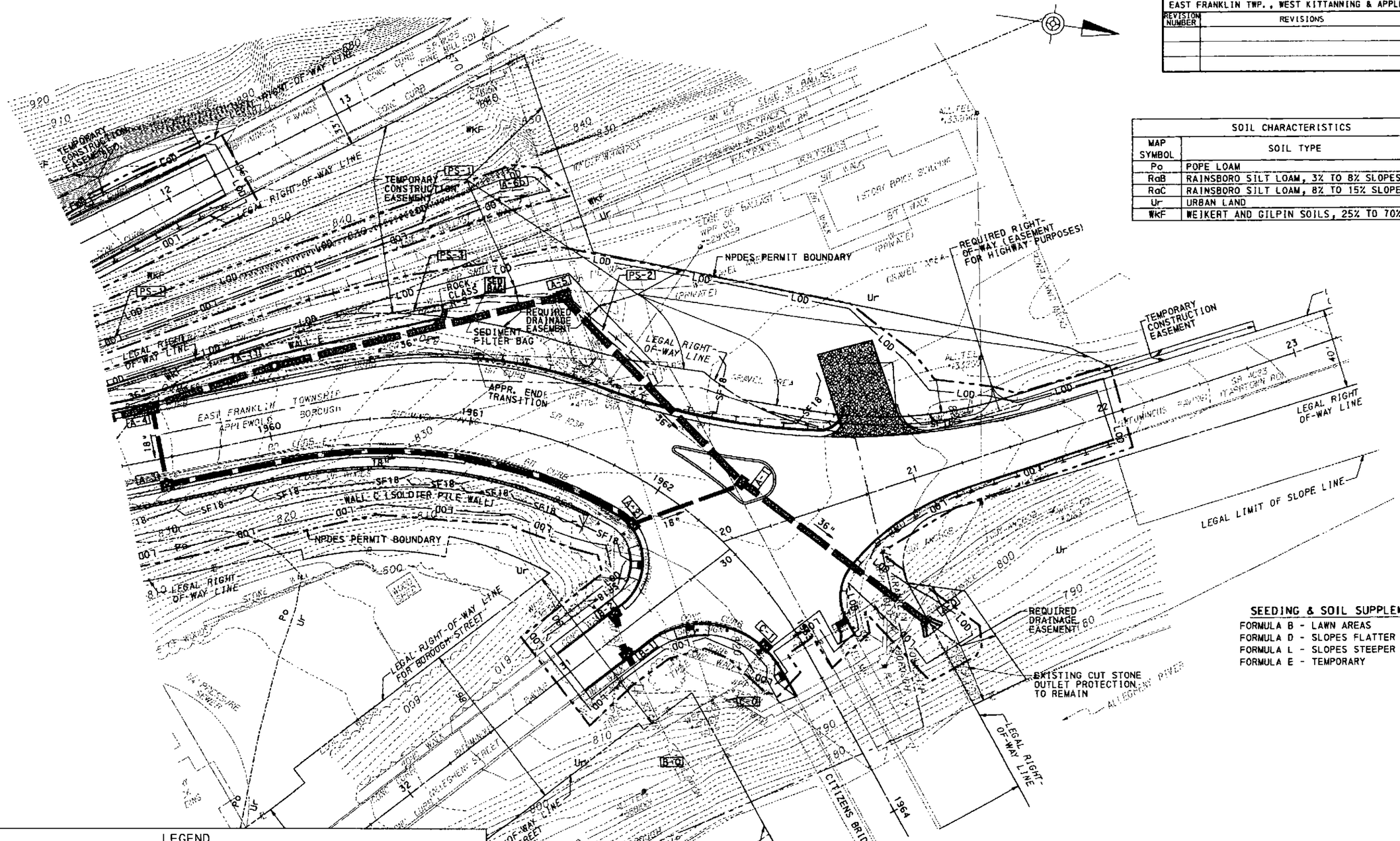

SOIL CHARACTERISTICS	
MAP SYMBOL	SOIL TYPE
Po	POPE LOAM
RaB	RAINSBORO SILT LOAM, 3% TO 8% SLOPES
RaC	RAINSBORO SILT LOAM, 8% TO 15% SLOPES
Ur	URBAN LAND
WkF	WEIKERT AND GILPIN SOILS, 25% TO 70% SLOPES

SEEDING & SOIL SUPPLEMENTS

FORMULA B - LAWN AREAS
FORMULA D - SLOPES FLATTER THAN 3:1
FORMULA L - SLOPES STEEPER THAN 3:1
FORMULA E - TEMPORARY

LEGEND			
—LOD—	LIMIT OF DISTURBANCE	A-0	DRAINAGE FACILITY
— - - -	NPDES PERMIT BOUNDARY		INLET PROTECTION
—SF18—	SILT BARRIER FENCE, 18" HEIGHT	PS-1	PERMANENT CHANNEL/SWALE NUMBER
—SSF—	SUPER SILT BARRIER FENCE	======	PERMANENT VEGETATIVE CHANNEL
→	FLOW DIRECTION		ROCK APRON
SED BAG	SEDIMENT FILTER BAG		
	ROCK CONSTRUCTION ENTRANCE		

SCALE
25 FEET 0 25 FEET

EROSION AND SEDIMENT POLLUTION CONTROL PLAN

A-00122496

DRAWN BY	SGM
CHECKED BY	JLS

COMMONWEALTH OF PENNSYLVANIA
REGISTERED PROFESSIONAL ENGINEER
MICHAEL J. MUTH
PE-CHIEF-E

h:\projects\0432\es\ecpln03.dgn 7/10/2001

TABULATION OF LIGHTING ITEMS

LIGHTING LOCATION / ITEM DESCRIPTION			0910 0001 JUNCTION BOXES J.B.-1 EACH	0910 0002 JUNCTION BOXES J.B.-2 EACH	0910 0154 POLE FOUNDATION, TYPE FC EACH			0910 1082 ALUMINUM LIGHTING POLE WITH 6-FOOT BRACKET ARM, (35-FOOT MTG. HGT.) TYPE A EACH	0910 1086 ALUMINUM LIGHTING POLE WITH 10-FOOT BRACKET ARM, (35-FOOT MTG. HGT.) TYPE A EACH	0910 1088 ALUMINUM LIGHTING POLE WITH 12-FOOT BRACKET ARM, (35-FOOT MTG. HGT.) TYPE A EACH	0910 1090 ALUMINUM LIGHTING POLE WITH 15-FOOT BRACKET ARM, (35-FOOT MTG. HGT.) TYPE A EACH		0910 2828 250-WATT HIGH PRESSURE SODIUM LUMINAIRE, ARM MOUNT EACH		9910 0154 POLE FOUNDATION, TYPE HT EACH	9910 0156 POLE FOUNDATION, TYPE AP EACH	LUMINAIRE DISTRIBUTION	LIGHTING POLE SETBACK FROM FACE OF CURB	LIGHTING POLE SETBACK FROM EDGE OF PAVEMENT	"C" DIMENSION	REMARKS
LOCATION	STATION	LUM. NO.																			
SR 1038	1944+50 RT.	A2-13							1				1			1	M-S-II	4.5'	—	-1.0'	SEE DETAIL E SHEET 4 OF 7
	1946+25 RT.	A1-12							1				1			1	M-S-II	4.5'	—	-1.5'	SEE DETAIL E SHEET 4 OF 7
	1948+00 RT.	A2-11						1					1		1		M-S-II	—	*	-2.7'	SEE DETAIL B SHEET 3 OF 7
	1948+03 RT.	—	1														—	—	—	—	PLACE BEHIND SIDEWALK
	1949+70 RT.	A1-10						1					1		1		M-S-II	—	*	-2.7'	SEE DETAIL B SHEET 3 OF 7
	1951+42 RT.	A2-9						1					1		1		M-S-II	—	*	-2.7'	SEE DETAIL B SHEET 3 OF 7
	1953+15 RT.	A1-8						1					1				M-S-II	—	**	-2.7'	SEE DETAIL A SHEET 3 OF 7 (STRUCTURE MOUNTED)
	1954+80 RT.	A2-7						1					1				M-S-II	—	**	-2.7'	SEE DETAIL A SHEET 3 OF 7 (STRUCTURE MOUNTED)
	1956+50 RT.	A1-6						1					1				M-S-II	—	**	-2.7'	SEE DETAIL A SHEET 3 OF 7 (STRUCTURE MOUNTED)
	1958+20 RT.	A2-5						1					1				M-S-II	—	**	-2.7'	SEE DETAIL A SHEET 3 OF 7 (STRUCTURE MOUNTED)
	1959+85 RT.	A1-4						1					1		1		M-S-II	—	*	-2.7'	SEE DETAIL B SHEET 3 OF 7
	1961+35 RT.	A2-3								1			1				M-S-II	—	—	-0.5'	RETAINING WALL ANCHORAGE
	1961+40 RT.	—	1														—	—	—	—	PLACE IN SIDEWALK, 6" FROM BACK EDGE
	1962+01 RT.	—	1														—	—	—	—	PLACE BEHIND SIDEWALK
	1962+20.5 LT.	A1-2			1						1		1				M-S-II	8.0'	—	+0.5'	
	1962+88 RT.	—		1													—	—	—	—	PLACE 6' FROM CONTROL CABINET
	1962+90 RT.	A1-1			1					1			1				M-S-II	11.0'	—	-0.5'	3 CONDUITS IN FOUNDATION
	1962+92 RT.	—															—	—		—	POWER SUPPLY LOC. - SEE DETAIL SHEET 2 OF 7
TOTALS			3	1	2			8	2	2	1		13		4	2					

*MOUNTED ONTO POLE FOUNDATION, TYPE HT. SEE DETAIL B SHEET 3 OF 7
**MOUNTED ONTO STRUCTURE ANCHORAGE. SEE DETAIL A SHEET 3 OF 7

ENTIRE PROJECT ITEMS

ITEM DESCRIPTION		0910 4114 AWG 4 UNDERGROUND CABLE, COPPER, 1 CONDUCTOR LF		0910 5055 2" DIRECT BURIAL CONDUIT LF		0910 5500 BURIED CABLE AND CONDUIT MARKER EACH	0910 6000 TRENCH LF		4910 7020 COMPLETE POWER SUPPLY SYSTEM SPECIAL EACH	0910 7210 TESTING OF ENTIRE LIGHTING SYSTEM LS		9910 4114 AWG 4 UNDERGROUND CABLE, COPPER, 1 CONDUCTOR, DISTRIBUTION GROUND WIRE LF		
ITEM NO.	UNIT													
TOTALS		6,295		754		1	740		1	LS		2,204		

DRAWN BY	TLL
CHECKED BY	MJW/RPC

ABBREVIATIONS

AWG	AMERICAN WIRE GAUGE	LUM.	LUMINAIRE
A	AUTOMATIC	M	MANUAL
BR	BRIDGE (MOUNTED)	MIN/MAX	MINIMUM/MAXIMUM
C/C	CENTER TO CENTER	MTG. HGT.	MOUNTING HEIGHT (LUMINAIRE)
CKT.	CIRCUIT	NTS	NOT TO SCALE
CL.	CLEARANCE	NO.	NUMBER
CONC.	CONCRETE	PE	PHOTOELECTRIC (CELL)
CIS	CONDUIT IN STRUCTURE	PVC	POLYVINYL CHLORIDE (CONDUIT)
COND.	CONDUIT	PROJ.	PROJECTION
DIA.	DIAMETER	RT./LT.	RIGHT/LEFT
DBC	DIRECT BURIAL CONDUIT	RI	ROADWAY ITEM
D.P.	DOUBLE POLE (BREAKER)	SI	STRUCTURE ITEM
ELECT.	ELECTRIC	SHLD	SHOULDER
FDTN.	FOUNDATION	S.P.	SINGLE POLE (BREAKER)
GALV	GALVANIZED	STD.	STANDARD
HPS	HIGH PRESSURE SODIUM	STA.	STATION
JUNCT.	JUNCTION	STL.	STEEL
JB	JUNCTION BOX	TYP	TYPICAL
LTG.	LIGHTING	UPC	UNDERPAVEMENT CONDUIT
LOC.	LOCATION	W	WATT

DISTRICT	COUNTY	ROUTE	SECTION	SHEET
10-0	ARMSTRONG	1038	150	1 OF 7
APPLEWOLD BOROUGH AND EAST FRANKLIN TOWNSHIP				

REVISION NUMBER	REVISIONS	DATE	BY

GENERAL NOTES

1. THE STANDARD SPECIFICATION FOR THE INSTALLATION OF ROADWAY LIGHTING IS PENNSYLVANIA DEPARTMENT OF TRANSPORTATION PUBLICATION 408/2007 AND ALL APPLICABLE PORTIONS OF THE NATIONAL ELECTRIC CODE.
2. CONSTRUCTION DETAILS NOT SHOWN ON THE DRAWINGS SHALL CONFORM TO THE PENNSYLVANIA DEPARTMENT OF TRANSPORTATION STANDARD DRAWINGS:

RC-80M	DATED	04-15-04	RC-84M	DATED	04-15-04
RC-81M	DATED	04-15-04	BC-721M	DATED	07-29-05
RC-83M	DATED	04-15-04	BC-722M	DATED	07-24-06
			BD-615M	DATED	07-29-05

3. DO NOT SCALE DRAWINGS. UTILITY LOCATIONS ARE BASED ON EXISTING MAPPING INFORMATION AVAILABLE. VERIFY UTILITY LOCATIONS AND ELEVATIONS PRIOR TO EXCAVATION.
4. PLACE AND TEST ALL GROUND RODS AND GROUND WIRE AT JUNCTION BOX LOCATIONS TO ATTAIN A MAXIMUM RESISTANCE TO EARTH GROUND OF 25 OHMS. INSTALL ADDITIONAL GROUND RODS UNTIL THIS CONDITION IS MET, AT NO ADDITIONAL COST TO THE DEPARTMENT. TEST ALL GROUND ROD INSTALLATIONS AND RECORD RESULTS ON PENNSYLVANIA DEPARTMENT OF TRANSPORTATION FORM 4225A AND SUBMIT TO THE ENGINEER FOR APPROVAL.
5. COORDINATE THE POWER SUPPLY CONNECTION WITH THE LOCAL ELECTRIC UTILITY COMPANY, ALLEGHENY POWER. THE FINAL CONNECTION TO THE ELECTRIC SOURCE WILL BE MADE BY ALLEGHENY POWER.
6. THE CONTRACTOR SHALL WORK IN STRICT COORDINATION WITH LOCAL UTILITY COMPANIES TO DETERMINE THE EXACT LOCATION OF ALL EXISTING UNDERGROUND AND OVERHEAD UTILITY LINES PRIOR TO COMMENCEMENT OF THIS WORK. ALL DAMAGES INCURRED TO EXISTING UTILITIES SHALL BE REPAIRED OR REPLACED BY THE CONTRACTOR AT NO ADDITIONAL COST TO THE DEPARTMENT. PER UNDERGROUND UTILITY LINE PROTECTION ACT 287, AS AMENDED BY ACT 187 OF 1996, MAINTAIN A MINIMUM DISTANCE OF 18 INCH CLEARANCE FROM ALL UNDERGROUND UTILITIES.
7. PROVIDE WATERTIGHT, SUBMERSIBLE, PREMOLDED, DISCONNECTABLE CONNECTOR KITS FOR ALL SPLICES. PROVIDE FUSIBLE SPLICES AT JUNCTION BOX LINE TAPS TO LIGHTING POLES.
8. PROVIDE METERED ELECTRIC SERVICE IN COORDINATION WITH LOCAL ELECTRIC UTILITY COMPANY.
9. DO NOT CONNECT THE NEUTRAL TO GROUND EXCEPT AT THE POWER SUPPLY LOCATION.
10. WHEN THE INSTALLATION OF THE HIGHWAY LIGHTING SYSTEM DISTURBS A STABILIZED EARTH SURFACE, THE CONTRACTOR MUST PROVIDE SEEDING AND MULCHING IN ACCORDANCE WITH PENNSYLVANIA DEPARTMENT OF TRANSPORTATION PUBLICATION 408, SECTIONS 804 AND 805. THESE COSTS ARE TO BE INCIDENTAL TO THE HIGHWAY LIGHTING SYSTEM ITEMS INSTALLED.
11. ENSURE THAT ALL CONVENTIONAL LUMINAIRES ARE INSTALLED WITH THE TRANSVERSE AXIS OF THE TYPE II LUMEN DISTRIBUTION ORIENTED AT 90° TO THE EDGE OF PAVEMENT UNLESS NOTED OTHERWISE.
12. PRIOR TO ANY EXCAVATION, POST DRIVING OR DEMOLITION WORK IN THE VICINITY OF THE UNDERGROUND UTILITIES, THE CONTRACTOR MUST CONTACT A "ONE CALL SYSTEM" AND COMPLY WITH PROVISIONS OF THE UNDERGROUND UTILITY LINE PROTECTION ACT 287 AS AMENDED BY ACT 187 OF 1996.
13. ONE CALL SYSTEM TELEPHONE NUMBER IS: 1-800-242-1776.
    DESIGNERS SERIAL NUMBERS: 2556437 FOR SR 1038 IN EAST FRANKLIN TOWNSHIP;
    2556446 FOR SR 1038 IN APPLEWOLD BOROUGH;
    2556441 FOR SR 4025 IN EAST FRANKLIN TOWNSHIP;
    2556452 FOR SR 4023 IN EAST FRANKLIN TOWNSHIP.
    ONE CALL SYSTEM SERIAL NUMBER IS:_____
14. PROVIDE ALUMINUM LIGHTING POLES WITH TRUSS-TYPE BRACKET ARMS. PROVIDE POLES THAT MEET THE GENERAL SILHOUETTE AND ARM RISE/ARM LENGTH REQUIREMENTS OF STANDARD DRAWING RC-83M. DESIGN CALCULATIONS ARE REQUIRED IN ACCORDANCE WITH PUBLICATION 408/2007, SECTION 1101.
15. "C" DIMENSIONS INDICATED ON THIS SHEET ARE FOR COST ESTIMATING PURPOSES ONLY. THE CONTRACTOR IS RESPONSIBLE FOR FIELD MEASURING EACH "C" DIMENSION PRIOR TO FABRICATION OF EACH LIGHTING POLE.

HIGHWAY LIGHTING SPECIAL REQUIREMENTS

PHOTOMETRIC SPECIFICATIONS FOR ITEM 0910-2828
250-WATT HIGH PRESSURE SODIUM LUMINAIRES, ARM MOUNT

IN ADDITION TO THE REQUIREMENTS SET FORTH IN THE PROJECT PLANS, STANDARD DRAWINGS AND STANDARD SPECIFICATIONS, ENSURE THAT LUMINAIRES, FOR EACH WATTAGE AND I.E.S. DISTRIBUTION CLASS SPECIFIED, PROVIDE POINT ILLUMINATION OF NOT LESS THAN THAT GIVEN IN TABLE 1. POINT 1 COORDINATES ARE NINETY (90) FEET LONGITUDINAL DISTANCE AND ZERO (0) FEET TRANSVERSE DISTANCE. POINT 2 COORDINATES ARE NINETY (90) FEET LONGITUDINAL AND THIRTY (30) FEET TRANSVERSE DISTANCE. THE POINT VALUES GIVEN IN TABLE 1 ARE BASED ON THIRTY (30) FOOT MOUNTING HEIGHT AND LAMP LUMEN OUTPUT GIVEN IN TABLE 2. SUBMIT PHOTOMETRIC DATA ALONG WITH CATALOG CUTS OF THE LUMINAIRE TO ASCERTAIN COMPLIANCE WITH THE REQUIRED POINT ILLUMINATION FOR MATERIAL APPROVAL. LUMINAIRES MUST PROVIDE TARGET DESIGN AVERAGES AND MEET AASHTO GLARE REQUIREMENTS.

TABLE 1			
LUMINAIRE WATTAGE	I.E.S. DIST.	POINT FOOTCANDLES	
		POINT 1	POINT 2
250	M-S-II	0.340	—

TABLE 2	
WATTS	LAMP LUMENS
250	27,500

A-00122496

COMMONWEALTH OF PENNSYLVANIA — MICHAEL J. WUTH — ENGINEER

HIGHWAY LIGHTING PLAN

H:\Projects\04324\Lighting\LTAB1.dgn 1/10/2007

DISTRICT	COUNTY	ROUTE	SECTION	SHEET
10-0	ARMSTRONG	1038	150	2 OF 7
APPLEWOLD BOROUGH AND EAST FRANKLIN TOWNSHIP				

REVISION NUMBER	REVISIONS	DATE	BY

PROVIDE CONTROL CABINET WITH EXTERNAL MOUNTING LUGS (TYP)

STAINLESS STEEL OR ALUMINUM CONTROL CABINET, NEMA 4, WATERTIGHT DIMENSIONS ADEQUATE TO CONTAIN NECESSARY COMPONENTS

METER BASE

NON-CORROSIVE HINGE

CONDUIT FITTING

5'-6" MAXIMUM TO GRADE LINE

3'-0"

2'-6"

6"

1'-6"

3'-0"

1'-6"

3" EXPOSED CONDUIT FOR POWER SUPPLY

¾" EXPOSED CONDUIT FOR GROUND

2" EXPOSED CONDUITS

EXISTING GRADE LINE

1½"

6" FORM

3'-10½"

2'-6"

3'-6" CHANNEL EMBEDMENT

3'-6" PLACE CONCRETE AGAINST UNDISTURBED EARTH

FROM EXISTING WOOD POLE NO. 352851

COPPER CLAD STEEL GROUND ROD/S ¾"x10'-0" MIN WITH EXOTHERMIC WELD OR BRONZE CONNECTOR (#4 AWG BARE COPPER GROUND WIRE) REFER TO GENERAL NOTE 4, SHEET 1 OF 7

MC6, 6"x3" HOT-DIP GALVANIZED STEEL CHANNEL (TYP)

3"x3"x⅜" HOT-DIP GALV STEEL ANGLE, WELDED TO SUPPORT ANGLE (TYP)

CABINET IDENTIFICATION LABEL, SEE NOTE 6

HASP AND BRASS PADLOCK (IDENTICAL KEY, BOTH LOCKS)

STAINLESS STEEL OR ALUMINUM HIGHWAY LIGHTING CONTROL CABINET

3"x3"x¾" HOT-DIP GALV STEEL ANGLE, WELDED TO SUPPORT ANGLE (TYP)

ELECTRICAL ENCLOSURE

1¼" EXPOSED CONDUIT FOR PHOTOELECTRIC CELL CIRCUIT

STAINLESS STEEL UNISTRUT-TYPE CHANNEL AND CLAMPS (TYP), SEE NOTE 7

CONNECT GALVANIZED RIGID STEEL CONDUITS TO DIRECT BURIAL (PVC) CONDUITS AT GRADE LINE (TYP).

½" CHAMFER (TYP)

EXISTING SIDEWALK

2'-0" CONDUIT DEPTH

TO J.B.-2

PADOT CLASS AA CEMENT CONCRETE

A

2'-6"

1'-0" DIAMETER

1'-3"

1'-0" DIAMETER

3'-3"

ELEVATION

CONTROL CABINET LOCATION DETAIL

S.R. 1038, STA. 1962+92 56' RT.

1' 0' 1'

SCALE: 1" = 1'-0"

℄ CHANNEL

CABINET IDENT. LABEL

BRASS PADLOCK

CABINET DOOR

MC6, 6"x3" HOT-DIP GALVANIZED STEEL CHANNEL (TYP)

METER BASE

ELECTRIC METER (BY UTILITY CO)

STAINLESS STEEL OR ALUMINUM, NEMA 4 ELECTRICAL ENCLOSURE WITH FUSED DISCONNECT AND BRASS PADLOCK

STAINLESS STEEL UNISTRUT-TYPE CHANNEL AND CLAMPS AS REQUIRED TO PROVIDE SUPPORT FOR METER BASE AND CONDUIT

COORDINATE WITH ALLEGHENY POWER COMPANY FOR ADDITIONAL POWER SUPPLY GROUNDING REQUIREMENTS.

GALVANIZED RIGID STEEL CONDUITS ABOVE GRADE (TYP)

B

B

EXISTING GRADE LINE

DIRECT BURIAL CONDUITS BELOW GRADE (TYP)

SECTION A-A

3" 6" 3"

4½"

3"

4½"

SECTION B-B

NOTES

1. INSTALL TWO AWG #10 ELECTRICAL CABLES (PLUS GROUND) BETWEEN THE JUNCTION BOX LINE TAP, THRU THE POLE BASE, AND THEN TO THE LUMINAIRE. ALL AWG #10 CABLE AND ALL REQUIRED GROUNDING CABLE FROM THE LINE TAP TO THE LUMINAIRE IS INCLUDED IN THE LUMINAIRE ITEM AT NO ADDITIONAL COST TO THE DEPARTMENT.
2. INSTALL A 10 AMP, MIDGET SIZE FUSE (250 VOLT RATING) COMPLETE WITH A MOLDED RUBBER-TYPE Y CONNECTOR KIT AT EACH JUNCTION BOX LINE TAP. FUSE THE PHASE WIRE ONLY. THIS WORK IS INCLUDED IN THE LUMINAIRE ITEM AT NO ADDITIONAL COST TO THE DEPARTMENT.
3. SEE DETAIL C, SHEET 4 OF 7, FOR THE ATTACHMENT OF LIGHTING POWER SUPPLY COMPONENTS TO THE ELECTRIC UTILITY COMPANY WOOD POLE.
4. ENSURE THAT ALL CABLE TERMINATION POINTS ARE WATERTIGHT AND INSULATED TO 600 VOLTS MINIMUM.
5. INSTALL GROUND CABLE INTO ALL CONDUITS AND POLES. GROUND CABLES ARE NOT SHOWN ON THE SCHEMATIC FOR CLARITY. ALL REQUIRED GROUND CABLE, EXCEPT #10 AWG GROUND CABLE FROM THE LINE TAP TO THE LUMINAIRE, ARE PAID FOR UNDER THE LINEAR FOOT UNIT PRICE FOR THE CIRCUIT DISTRIBUTION GROUND WIRE ITEM.
6. LABEL ALL CONTROL CABINET DISTRIBUTION CIRCUIT BREAKERS USING HARD PLASTIC LABELS WITH ¼" WHITE ENGRAVED LETTERING. ALSO PROVIDE HARD PLASTIC LABEL FOR THE CONTROL CABINET DOOR WITH ½" WHITE ENGRAVED LETTERING AS INDICATED.
7. ENSURE THAT ALL UNISTRUT-TYPE CHANNELS AND ALL MISCELLANEOUS ATTACHMENT HARDWARE IS STAINLESS STEEL. POSITION CHANNELS TO ALLOW SECURE ATTACHMENT OF ELECTRIC METER AND EXPOSED CONDUITS. THIS WORK IS INCLUDED IN THE POWER SUPPLY ITEM AT NO ADDITIONAL COST TO THE DEPARTMENT.
8. ALL FABRICATED STRUCTURAL STEEL SHALL BE IN ACCORDANCE WITH PENNDOT PUB 408, SECTION 1105 FOR HIGH STRENGTH, LOW-ALLOY STRUCTURAL STEEL FOR WELDING AND SHALL BE HOT-DIP GALVANIZED AFTER FABRICATION. ALL MATERIAL AND WORK REQUIRED FOR THE COMPLETE INSTALLATION OF THE FOUNDATION, FABRICATED STRUCTURAL STEEL, CABINET AND COMPONENTS ARE INCLUDED IN THE POWER SUPPLY ITEM AT NO ADDITIONAL COST TO THE DEPARTMENT. REFER TO STANDARD DRAWING RC-84M FOR ADDITIONAL POWER SUPPLY DETAILS.
9. PROVIDE MATERIALS AND WORKMANSHIP IN ACCORDANCE WITH THE CURRENT VERSIONS OF PUBLICATION 408, ANSI/AWS WELDING CODE D1.5-95 AND CONTRACT SPECIAL PROVISIONS. USE ANSI/AWS D1.1-98 FOR WELDING NOT COVERED IN ANSI/AASHTO/AWS D1.5-95.
10. PROVIDE THE MAIN DISCONNECT IN A SEPARATE NEMA 3R OR 4 ENCLOSURE THAT IS LABELED AS "SUITABLE FOR USE AS SERVICE EQUIPMENT". PROVIDE WITH LOCKABLE COVER AND NO EXTERNAL HANDLE. THE DISCONNECT MAY BE PROVIDED INTEGRAL TO THE CONTROL CABINET IF THE CABINET IS DEAD-FRONT AND LABELED AS "SUITABLE FOR USE AS SERVICE EQUIPMENT".

SCHEMATIC WIRING DIAGRAM
HIGHWAY LIGHTING CONTROL CABINET

S.R. 1038, STA. 1962+92 56' RT.

SCHEMATIC REPRESENTATION ONLY - COORDINATE WITH ELECTRIC UTILITY COMPANY FOR FINAL CONFIGURATION OF CONDUITS AT THE LIGHTING CONTROL CABINET. REVISE CONTROL CABINET LOCATION DETAIL ABOVE TO MATCH UTILITY COMPANY SERVICE DROP LOCATION, METERING, SIZE AND GROUNDING REQUIREMENTS.

HIGHWAY LIGHTING CONTROL CABINET COMPONENTS	
(A)	LIGHTNING ARRESTER
(B)	MAIN DISCONNECT, 100 AMP D.P. CIRCUIT BREAKER, 10,000 A.I.C. MINIMUM (SEE NOTE 10)
(C)	CONTROL CABINET - NEMA 4, WATERTIGHT, STAINLESS STEEL OR ALUMINUM - ENSURE THAT DIMENSIONS ARE ADEQUATE TO CONTAIN NECESSARY COMPONENTS AND TO PROVIDE MINIMUM CLEARANCES. (SEE NOTE 6)
(D)	CONTROL CONTACTOR, 100 AMP D.P., 120V COIL
(E)	DIST. CIRCUIT BREAKERS, S.P., 10,000 A.I.C. MIN., CKT. "A" AND SPARE - 30 AMP
(F)	600-VOLT, THREE POSITION (AUTO-OFF-MANUAL) MAINTAINED CONTACT, CONTROL STATION
(G)	PHOTOELECTRIC CELL, CADMIUM-SULPHIDE TYPE WITH FAIL-SAFE IN THE "ON" POSITION.
(H)	SINGLE POLE CIRCUIT BREAKER, 15 AMP
(I)	2" GALVANIZED STEEL CONDUIT (2) FOR HIGHWAY LIGHTING DISTRIBUTION CIRCUIT
(J)	3" GALVANIZED STEEL CONDUIT (1) FOR ELECTRIC SUPPLY FROM ALLEGHENY POWER SOURCE
(K)	¾" GALVANIZED STEEL CONDUIT (1) FOR GROUND WIRE
(L)	1¼" GALVANIZED STEEL CONDUIT (1) FOR PHOTOELECTRIC CELL CIRCUIT
(M)	ELECTRICAL ENCLOSURE - NEMA 4, WATERTIGHT STAINLESS STEEL OR ALUMINUM WITH 100-AMP FUSED DISCONNECT

(A) (B) SEE NOTE 10 (C) (M) (H) (D) (F) M OFF A

N L1 L2

25 OHMS MAX.

METER BASE

120/240 VOLT, 3 WIRE, SINGLE PHASE 60 Hz. SUPPLY (3#1/0 AWG)

(J) L1 L2 N

3#1/0 AWG

FUTURE SPARE (E) (S.P.)

EMPTY

(K) (I) (L)

25 OHMS MAX.

N A1 A2

A1-2 2#4 AWG (G) PE CELL ON LUMINAIRE A1-1

A1-1 2#10 AWG

3#4 AWG

3#10 AWG (PE CELL CIRCUIT)

EMPTY

J.B.-1 1962+40 RT.

A2-3

2#4 AWG

J.B.-1 1962+01 RT.

POLE BASE (TYP)

3#10 AWG

J.B.-2 1962+88 RT.

A2-11 A1-10 A2-9 A1-8 A2-7 A1-6 A2-5 A1-4

2#10 AWG (TYP)

J.B.-25 (RI)

J.B.-25 (RI) J.B.-25 (RI) J.B.-25 (SI) J.B.-25 (SI) J.B.-25 (SI) J.B.-25 (SI) J.B.-25 (RI)

2#10 AWG (TYP)

3#4 AWG

A2-13 A1-12

2#10 AWG (TYP)

2#4 AWG

POLE BASE 3#4 AWG (TYP)

J.B.-1 1948+03 RT.

SCHEMATIC LEGEND

	250-WATT, 120-VOLT HIGH PRESSURE SODIUM LUMINAIRE
	FUSEHOLDER WITH 10-AMP FUSETRON
	COPPER CIRCUIT CONDUCTORS
	JUNCTION BOX TYPE J.B.-25, TYPE J.B.-1 OR TYPE J.B.-2, AS NOTED
	LIGHTING POLE BASE

DRAWN BY	TLL
CHECKED BY	MJM/RPC

HIGHWAY LIGHTING PLAN

COMMONWEALTH OF PENNSYLVANIA REGISTERED PROFESSIONAL MICHAEL J. MUTH ENGINEER

A-00122496

N:\Projects\0432\Lighting\1sch1.dgn 7/10/2007

DISTRICT	COUNTY	ROUTE	SECTION	SHEET
10-0	ARMSTRONG	1038	150	3 OF 7

APPLEWOLD BOROUGH AND EAST FRANKLIN TOWNSHIP

REVISION NUMBER	REVISIONS	DATE	BY

NOTES

1. SUITABLY GROUND ALL LIGHTING POLES, LUMINAIRES AND JUNCTION BOXES AS INDICATED IN PUBLICATION 408, SECTION 910.3(q). INSTALL A CONTINUOUS GROUNDING CONDUCTOR INTO ALL CONDUITS OF THE SAME SIZE AS THE CIRCUIT CONDUCTORS. GROUND WIRE IS INCLUDED IN THE CIRCUIT CONDUCTOR ITEM AT NO ADDITIONAL COST TO THE DEPARTMENT.
2. REFER TO STANDARD DRAWINGS RC-80M AND BD-615M FOR ADDITIONAL POLE FOUNDATION DETAILS.
3. ALL CONDUITS IN STRUCTURE, CONDUITS IN ROADWAY PARAPETS, STRUCTURE AND PARAPET MOUNTED LIGHTING POLE ANCHORAGES, AND J.B.-25 JUNCTION BOXES ARE STRUCTURE ITEMS OR ROADWAY ITEMS AND ARE PAID FOR UNDER THE LUMP SUM STRUCTURE OR ROADWAY ITEMS. THESE LIGHTING-RELATED ITEMS ARE SHOWN ON THE LIGHTING PLAN FOR INFORMATIONAL AND COORDINATION PURPOSES ONLY.
4. INSTALL A MOLDED NEOPRENE DEFLECTION FITTING ONTO THE 1¼" CONDUIT THAT EXTENDS FROM THE ROADWAY BARRIER TO THE POLE FOUNDATION, TYPE HT. REFER TO STANDARD DRAWING BC-721M, SHEET 2 OF 2 FOR DEFLECTION FITTING DETAILS. THE DEFLECTION FITTING IS INCLUDED IN THE 1¼" CONDUIT IN STRUCTURE ITEM (ROADWAY BARRIER) AT NO ADDITIONAL COST TO THE DEPARTMENT.
5. ALL FOUNDATION REINFORCEMENT STEEL SHALL BE IN ACCORDANCE WITH PUBLICATION 408, SECTION 709.1(a)1.
6. REFER TO STANDARD DRAWING RC-80M FOR ADDITIONAL GROUNDING REQUIREMENTS FOR LIGHTING POLE FOUNDATIONS LOCATED OFF-STRUCTURE.

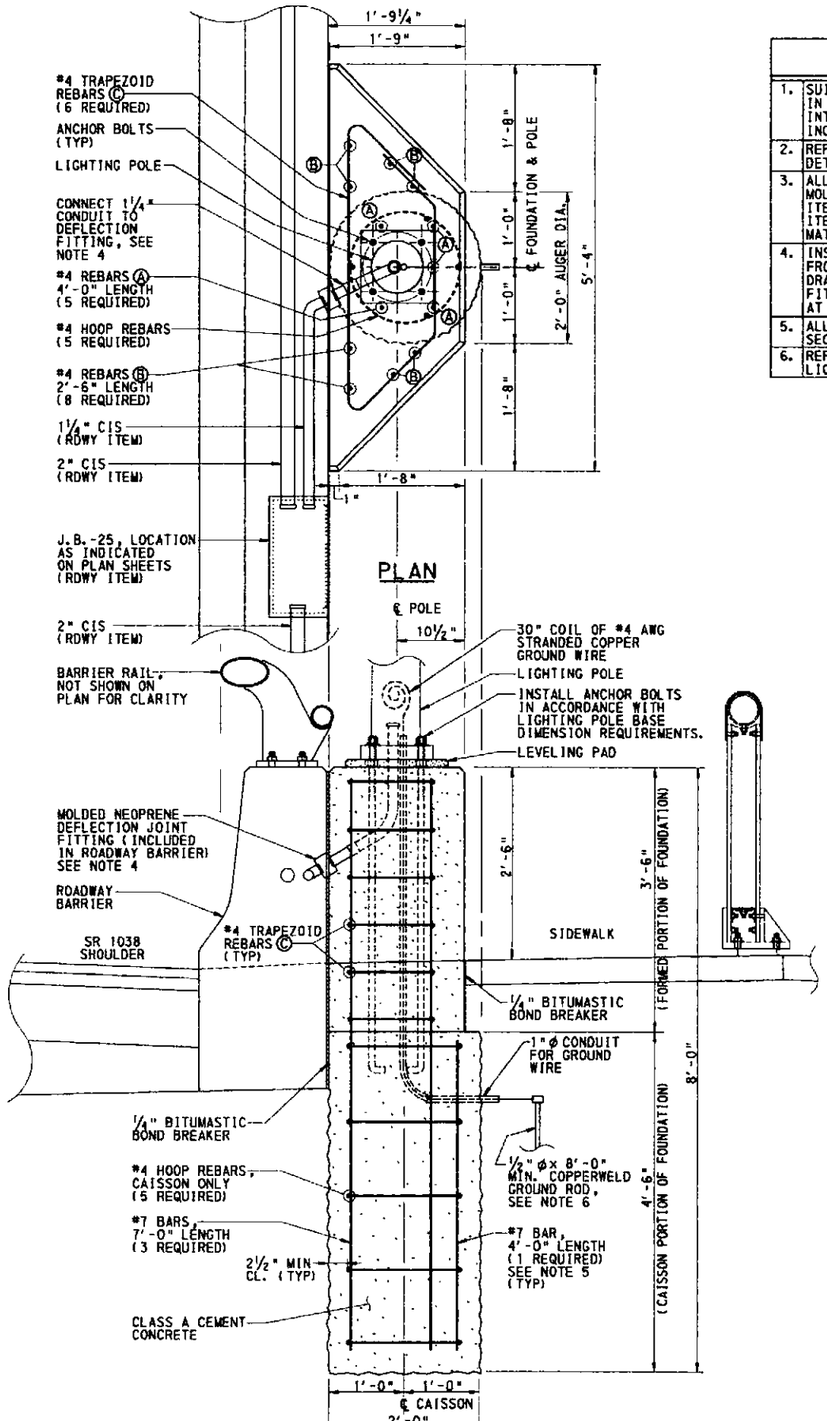

ELEVATION

DETAIL B

POLE FOUNDATION, TYPE HT

1' 0' 1'

SCALE: 1" = 1'-0"

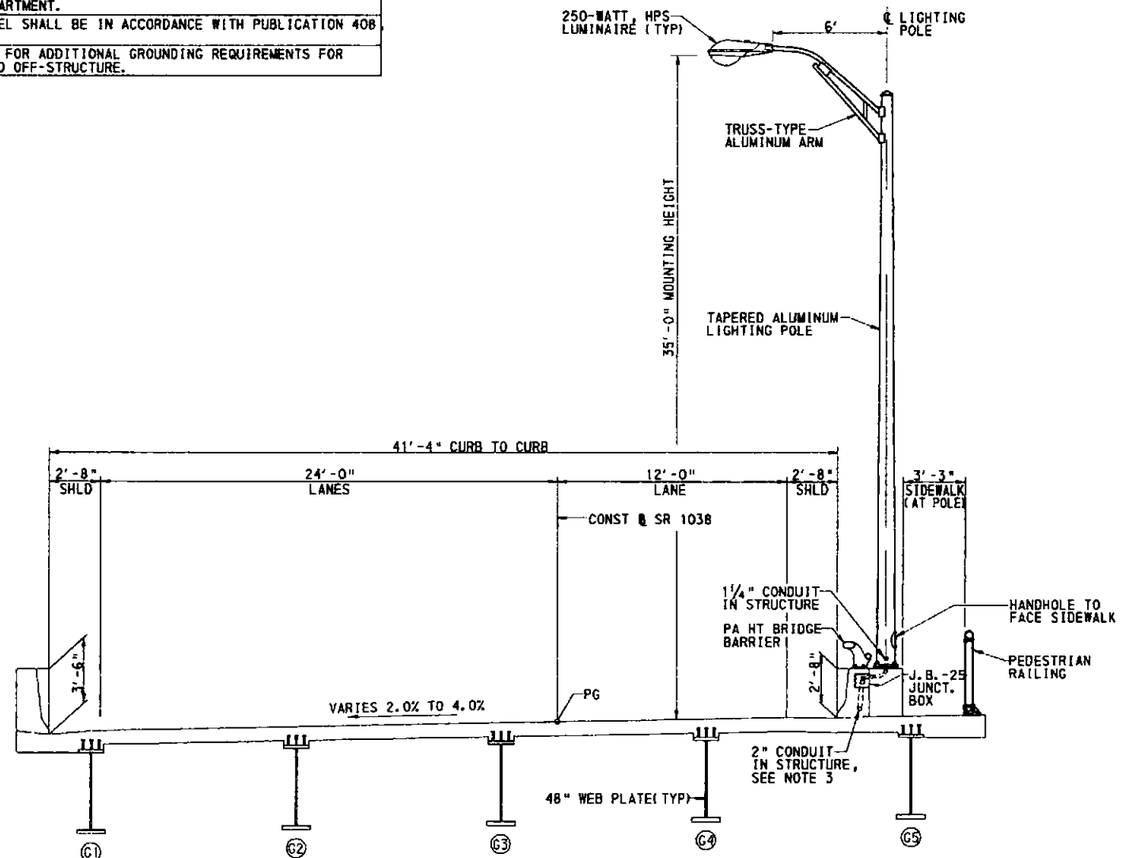

DETAIL A

TYPICAL SECTION

STRUCTURE MOUNTED LIGHTING POLE

SIMILAR FOR LIGHTING POLE A1-8, STA. 1953+15 RT.

4' 2' 0' 4'

SCALE: ¼" = 1'-0"

DRAWN BY	TLL
CHECKED BY	MJM/RPC

A-00122496

COMMONWEALTH OF PENNSYLVANIA REGISTERED PROFESSIONAL MICHAEL J. MUTH

HIGHWAY LIGHTING PLAN

H:\PROJECTS\0432\LIGHTING\LTDET1.dgn 7/10/2007

DISTRICT	COUNTY	ROUTE	SECTION	SHEET
10-0	ARMSTRONG	1038	150	4 OF 7
APPLEWOLD BOROUGH AND EAST FRANKLIN TOWNSHIP				

REVISION NUMBER	REVISIONS	DATE	BY

NOTES

1. ALL WORK INVOLVING ELECTRIC UTILITY COMPANY POLES AND SERVICE DROPS SHALL BE STRICTLY COORDINATED WITH, AND APPROVED BY, THE ELECTRIC UTILITY COMPANY PRIOR TO COMMENCEMENT OF THIS WORK.
2. ALL WORK AND MATERIAL REQUIRED FOR THE COMPLETE AND SATISFACTORY INSTALLATION OF THE LIGHTING POWER SUPPLY CIRCUIT BETWEEN THE ELECTRIC UTILITY COMPANY CONNECTION POINT AND THE LIGHTING CONTROL CABINET ARE INCLUDED IN THE COMPLETE POWER SUPPLY SYSTEM ITEM AT NO ADDITIONAL COST TO THE DEPARTMENT.
3. TYPE J.B.-27 JUNCTION BOXES AS LISTED IN BULLETIN 15 MAY BE SUBSTITUTED FOR JUNCTION BOXES TYPE J.B.-1 AT THE CONTRACTOR'S DISCRETION. REFER TO THE ALTERNATE JUNCTION BOX DETAIL, THIS SHEET, IF J.B.-27 JUNCTION BOXES ARE INSTALLED.
4. SUITABLY GROUND ALL LIGHTING POLES, LUMINAIRES AND JUNCTION BOXES AS INDICATED IN PUBLICATION 408, SECTION 910.3(q). INSTALL A CONTINUOUS GROUNDING CONDUCTOR INTO ALL CONDUITS OF THE SAME SIZE AS THE CIRCUIT CONDUCTORS. PAYMENT FOR GROUNDING CONDUCTOR IS INCLUDED IN ITEM 9910-4114.
5. ALL FOUNDATION REINFORCEMENT STEEL SHALL BE IN ACCORDANCE WITH PUBLICATION 408, SECTION 709.1(a)1.

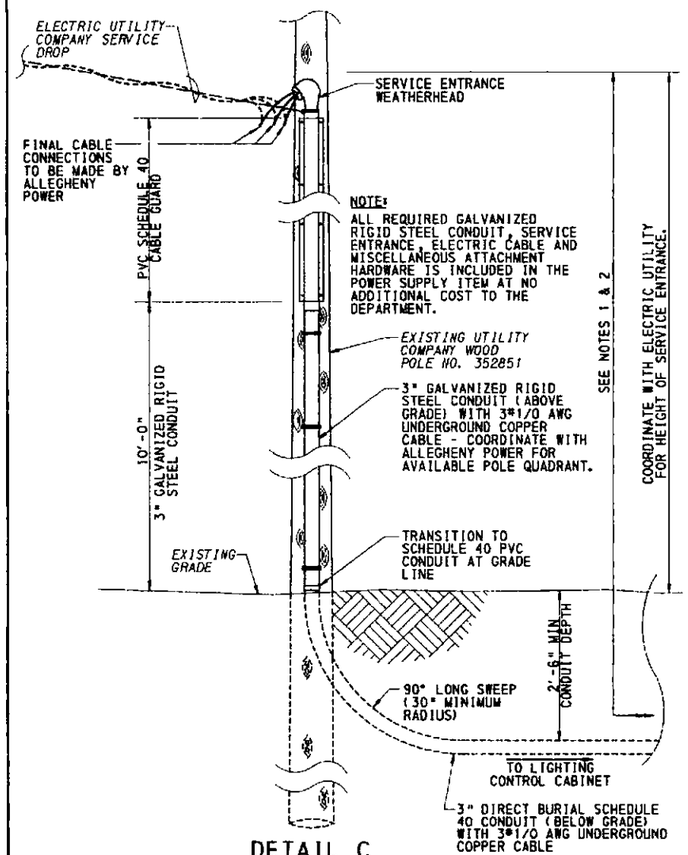

DETAIL C
POWER SUPPLY CONNECTION TO ELECTRIC UTILITY CO. POLE
S.R. 1038, STA. 1963+18 RT.
NTS

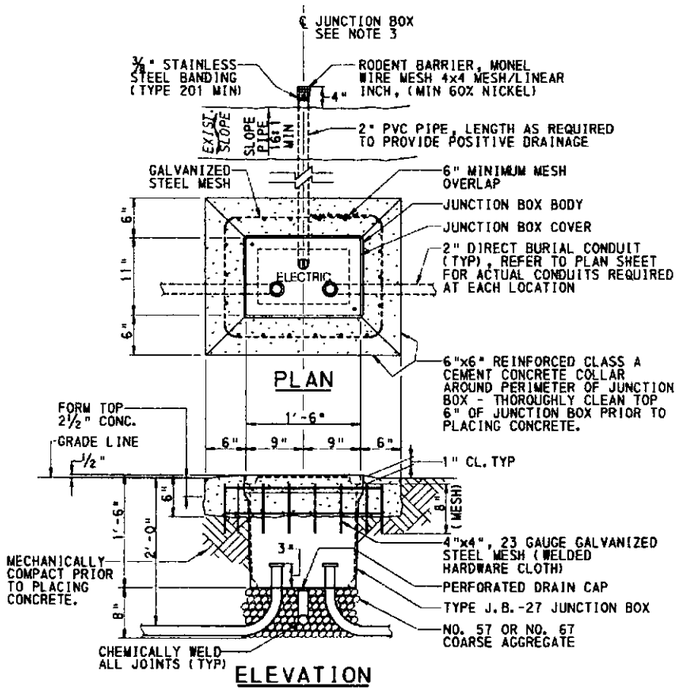

ELEVATION

DETAIL D
ALTERNATE JUNCTION BOX DETAIL
1' 0' 1'
SCALE: 1" = 1'-0"

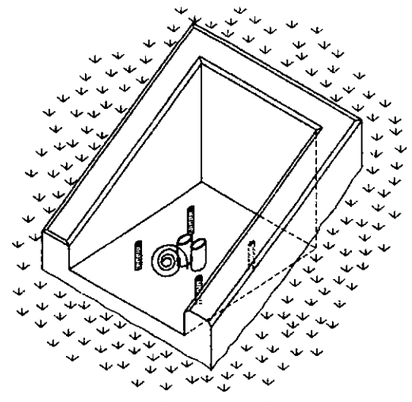

ISOMETRIC VIEW

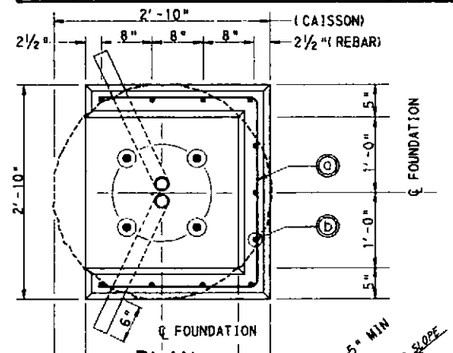

℄ FOUNDATION
PLAN

NOTE:
POLE HANDHOLE TO FACE ROADWAY

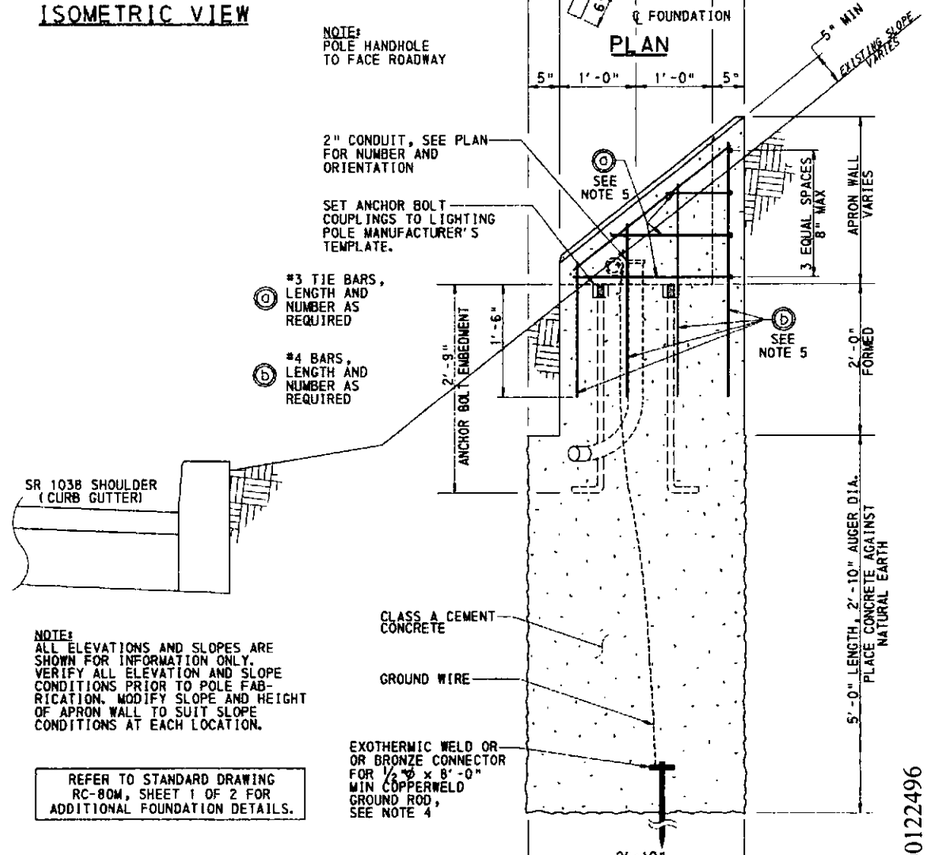

ELEVATION

REFER TO STANDARD DRAWING RC-80M, SHEET 1 OF 2 FOR ADDITIONAL FOUNDATION DETAILS.

DETAIL E
POLE FOUNDATION, TYPE AP
INCLUDED IN ITEM NUMBER 9910-0156
1' 0' 1'
SCALE: 1" = 1'-0"

HIGHWAY LIGHTING PLAN

DRAWN BY	TLL
CHECKED BY	MJM/RPC

COMMONWEALTH OF PENNSYLVANIA
PROFESSIONAL
MICHAEL J. MUTH

A-00122496

H:\Projects\0432\Lighting\LTDET2.dgn 7/10/2007

DISTRICT	COUNTY	ROUTE	SECTION	SHEET
10-0	ARMSTRONG	1038	150	5 OF 7

APPLEWOLD BOROUGH AND EAST FRANKLIN TOWNSHIP

REVISION NUMBER	REVISIONS	DATE	BY

LIGHTING LEGEND

	STRUCTURE MOUNTED ALUMINUM LIGHTING POLE (35-FT. MTG. HGT.) WITH 250-WATT HPS ARM MOUNTED LUMINAIRE
	TYPE HT FOUNDATION WITH ALUMINUM LIGHTING POLE (35-FT. MTG. HGT.) WITH 250-WATT HPS ARM MOUNTED LUMINAIRE - SEE SHEET 3 OF 7
	TYPE FC FOUNDATION WITH ALUMINUM LIGHTING POLE (35-FT. MTG. HGT.) WITH 250-WATT HPS ARM MOUNTED LUMINAIRE
	TYPE AP FOUNDATION WITH ALUMINUM LIGHTING POLE (35-FT. MTG. HGT.) WITH 250-WATT HPS ARM MOUNTED LUMINAIRE - SEE SHEET 4 OF 7
	RETAINING WALL MOUNTED ALUMINUM LIGHTING POLE (35-FT. MTG. HGT. WITH 250-WATT HPS ARM MOUNTED LUMINAIRE
	EXISTING ALLEGHENY POWER COMPANY WOOD POLE WITH ARM-MOUNTED LUMINAIRE, (COMPLETE OR PARTIAL REMOVAL BY ALLEGHENY POWER)
	FOUNDATION CONDUIT STUBOUT, 6" LENGTH - CAPPED
	JUNCTION BOX TYPE J.B.-1 OR TYPE J.B.-2 AS NOTED - SEE NOTE 6, SHEET 7 OF 7
CM	BURIED CABLE AND CONDUIT MARKER - INSTALL UNDER GUIDE RAIL AT POINT WHERE CONDUIT CROSSES
	JUNCTION BOX TYPE J.B.-25 - STRUCTURE ITEM (SI) OR ROADWAY ITEM (RI) AS NOTED
	HIGHWAY LIGHTING CONTROL CABINET - STAINLESS STEEL OR ALUMINUM, NEMA TYPE 4, WATERTIGHT, AND SUPPORT FRAME
	TRENCH WITH 2 INCH DIRECT BURIAL CONDUIT (DBC) AND UNDERGROUND DISTRIBUTION AND GROUND CABLE
	2 INCH CONDUIT IN STRUCTURE (CIS), STRUCTURE ITEM, WITH UNDERGROUND DISTRIBUTION AND GROUND CABLE
PS PS PS	TRENCH WITH 3 INCH DIRECT BURIAL CONDUIT AND 3#1/0 AWG UNDERGROUND CABLES PLUS GROUND (POWER SUPPLY)
	UNDERPAVEMENT CONDUIT (UPC) CROSSING UNDER ROADWAY IN TRENCH WITH 2 INCH DIRECT BURIAL CONDUIT AND UNDERGROUND DISTRIBUTION AND GROUND CABLE - PLACE PRIOR TO ROADWAY PAVING

NUMBER OF CONDUCTORS
SIZE OF CONDUCTORS
3#4 AWG
2" DBC—CONDUIT TYPE: DBC= DIRECT BURIAL; CIS= CONDUIT IN STRUCTURE; UPC= UNDERPAVEMENT CONDUIT
SIZE OF CONDUIT

LIGHTING POLE LOCATION
STA. 1949+70 RT.
CIRCUIT—A1-10, A-35-6(HT)—POLE MOUNTING: (FC)= TYPE FC FOUNDATION; (HT)= TYPE HT FOUNDATION; (AP)= TYPE AP FOUNDATION; (SA)= STRUCTURE ANCHORAGE; (RW)= RETAINING WALL
PHASE CONNECTION
POLE NUMBER
POLE BASE TYPE: A = ANCHOR BASE
ARM LENGTH
MOUNTING HEIGHT

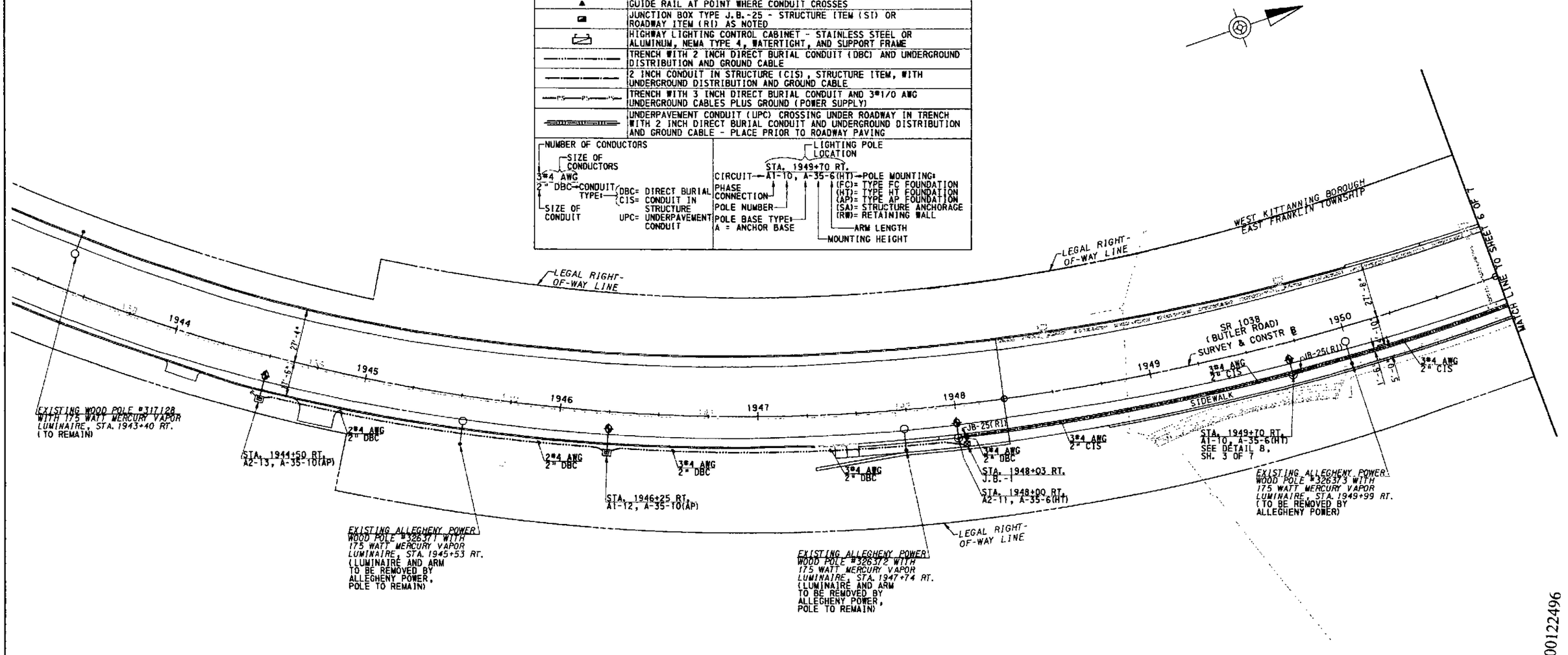

SCALE
25 FEET 0 25 FEET

DRAWN BY	TLL
CHECKED BY	MJM/RPC

HIGHWAY LIGHTING PLAN

A-00122496

COMMONWEALTH OF PENNSYLVANIA — REGISTERED PROFESSIONAL — MICHAEL J. MUTH — ENGINEER

P:\Projects\0432\Lighting\lplan01.dgn 7/10/2003

DISTRICT	COUNTY	ROUTE	SECTION	SHEET
10-0	ARMSTRONG	1038	150	6 OF 7
APPLEWOLD BOROUGH AND EAST FRANKLIN TOWNSHIP				

REVISION NUMBER	REVISIONS	DATE	BY

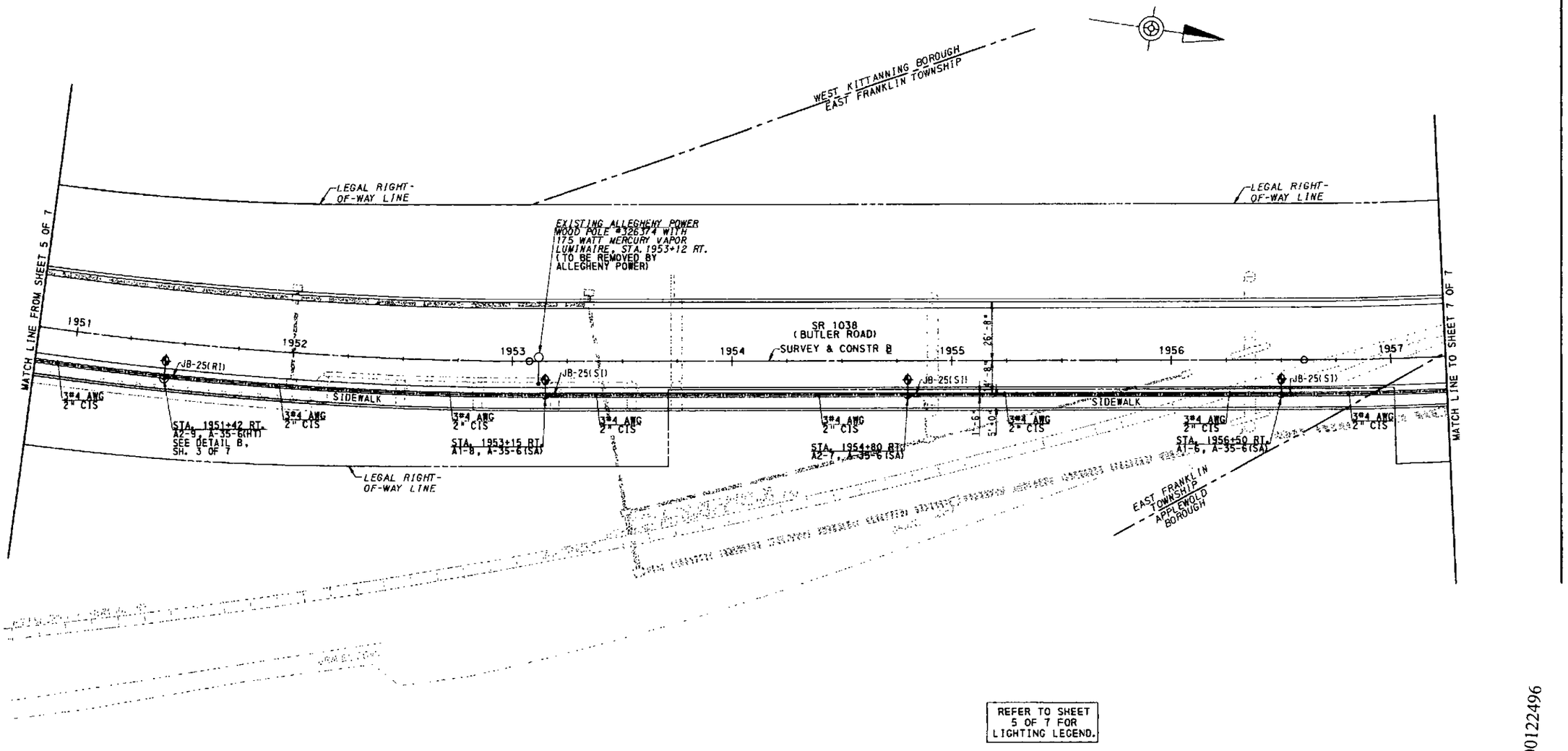

REFER TO SHEET 5 OF 7 FOR LIGHTING LEGEND.

A-00122496

DRAWN BY	TLL
CHECKED BY	MJM/RPC

SCALE
25 FEET 0 25 FEET

HIGHWAY LIGHTING PLAN

COMMONWEALTH OF PENNSYLVANIA
REGISTERED PROFESSIONAL
MICHAEL J. MUTH
ENGINEER

R:\Projects\0432\Lighting\11plan02.dgn 7/10/2007

DISTRICT	COUNTY	ROUTE	SECTION	SHEET
10-0	ARMSTRONG	1038	150	7 OF 7
APPLEWOLD BOROUGH AND EAST FRANKLIN TOWNSHIP				

REVISION NUMBER	REVISIONS	DATE	BY

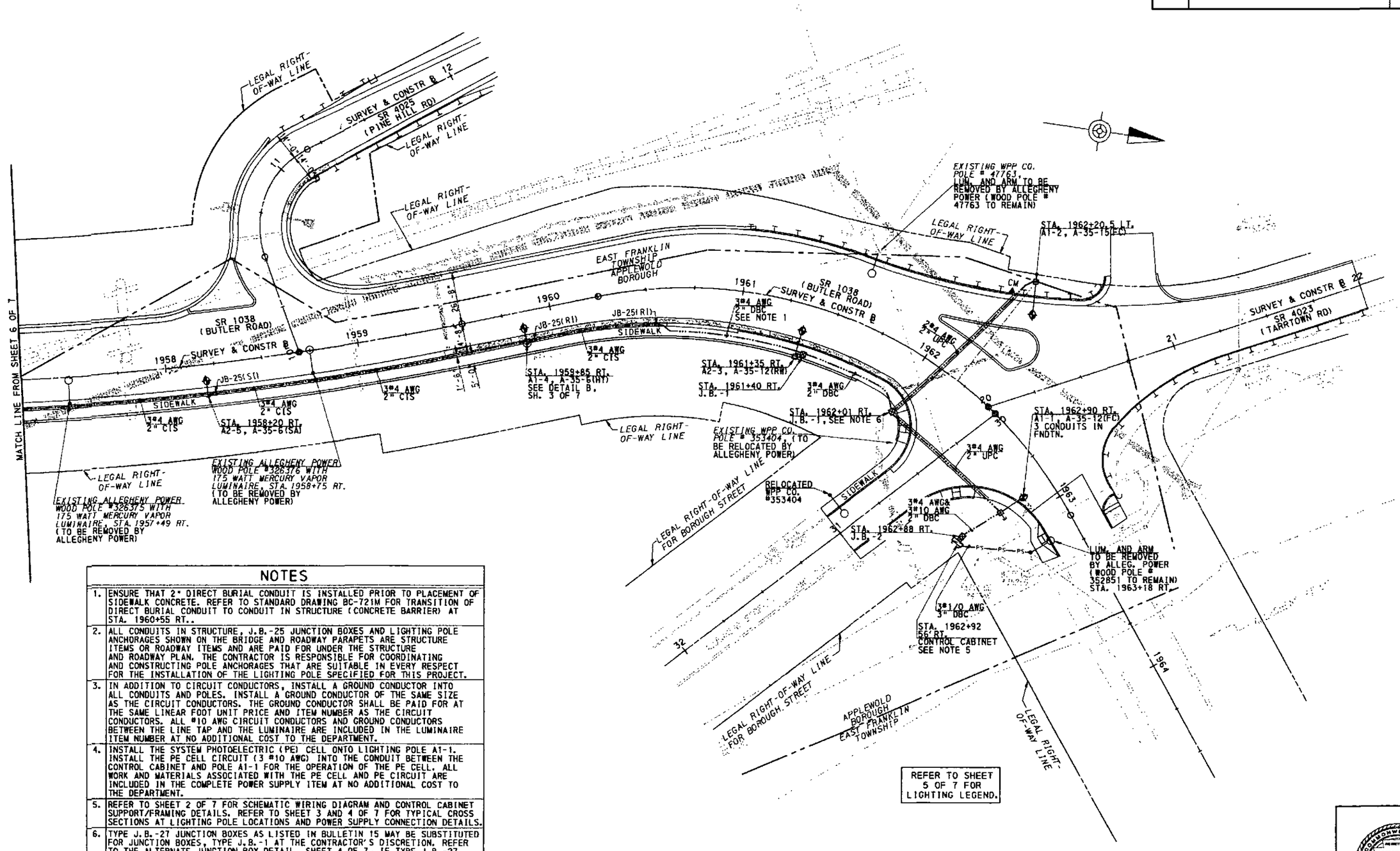

NOTES

1. ENSURE THAT 2" DIRECT BURIAL CONDUIT IS INSTALLED PRIOR TO PLACEMENT OF SIDEWALK CONCRETE. REFER TO STANDARD DRAWING BC-721M FOR TRANSITION OF DIRECT BURIAL CONDUIT TO CONDUIT IN STRUCTURE (CONCRETE BARRIER) AT STA. 1960+55 RT..
2. ALL CONDUITS IN STRUCTURE, J.B.-25 JUNCTION BOXES AND LIGHTING POLE ANCHORAGES SHOWN ON THE BRIDGE AND ROADWAY PARAPETS ARE STRUCTURE ITEMS OR ROADWAY ITEMS AND ARE PAID FOR UNDER THE STRUCTURE AND ROADWAY PLAN. THE CONTRACTOR IS RESPONSIBLE FOR COORDINATING AND CONSTRUCTING POLE ANCHORAGES THAT ARE SUITABLE IN EVERY RESPECT FOR THE INSTALLATION OF THE LIGHTING POLE SPECIFIED FOR THIS PROJECT.
3. IN ADDITION TO CIRCUIT CONDUCTORS, INSTALL A GROUND CONDUCTOR INTO ALL CONDUITS AND POLES. INSTALL A GROUND CONDUCTOR OF THE SAME SIZE AS THE CIRCUIT CONDUCTORS. THE GROUND CONDUCTOR SHALL BE PAID FOR AT THE SAME LINEAR FOOT UNIT PRICE AND ITEM NUMBER AS THE CIRCUIT CONDUCTORS. ALL #10 AWG CIRCUIT CONDUCTORS AND GROUND CONDUCTORS BETWEEN THE LINE TAP AND THE LUMINAIRE ARE INCLUDED IN THE LUMINAIRE ITEM NUMBER AT NO ADDITIONAL COST TO THE DEPARTMENT.
4. INSTALL THE SYSTEM PHOTOELECTRIC (PE) CELL ONTO LIGHTING POLE A1-1. INSTALL THE PE CELL CIRCUIT (3 #10 AWG) INTO THE CONDUIT BETWEEN THE CONTROL CABINET AND POLE A1-1 FOR THE OPERATION OF THE PE CELL. ALL WORK AND MATERIALS ASSOCIATED WITH THE PE CELL AND PE CIRCUIT ARE INCLUDED IN THE COMPLETE POWER SUPPLY ITEM AT NO ADDITIONAL COST TO THE DEPARTMENT.
5. REFER TO SHEET 2 OF 7 FOR SCHEMATIC WIRING DIAGRAM AND CONTROL CABINET SUPPORT/FRAMING DETAILS. REFER TO SHEET 3 AND 4 OF 7 FOR TYPICAL CROSS SECTIONS AT LIGHTING POLE LOCATIONS AND POWER SUPPLY CONNECTION DETAILS.
6. TYPE J.B.-27 JUNCTION BOXES AS LISTED IN BULLETIN 15 WAY BE SUBSTITUTED FOR JUNCTION BOXES, TYPE J.B.-1 AT THE CONTRACTOR'S DISCRETION. REFER TO THE ALTERNATE JUNCTION BOX DETAIL, SHEET 4 OF 7, IF TYPE J.B.-27 JUNCTION BOXES ARE INSTALLED.

SCALE
25 FEET 0 25 FEET

HIGHWAY LIGHTING PLAN

A-00122496

DRAWN BY	TLL
CHECKED BY	MJM/RPC

COMMONWEALTH OF PENNSYLVANIA
REGISTERED PROFESSIONAL
MICHAEL J. MUTH
ENGINEER

H:\Projects\0432\Lighting\lplan05.dgn 7/19/2007

COUNTY	DISTRICT
ARMSTRONG	10

ABUTMENT 3

WINGWALL B

WKB-037
STA 1958+54, 79.0' lt
ELEVATION 850.5

G.S.E. 850.5

A	B	C	D	E	DESCRIPTION	
					Asphalt.	850.5
					Red Brick.	849.8
					GRAVEL, sandy; orange-brown; moist; loose to medium dense.	849.0
4.5	7-8-7	0.6				
6.0	7-7-6	0.3				
7.5	2-1-3	0.3				
9.0	3-16-19	0.8				842.0
TRE 840.9 9.6	29-50/1	0.6			CLAY; orange-brown; moist; hard.	840.9
12.0		2.2	90	0	CLAYSTONE; gray; very soft. Stratum RQD=0%	840.0
17.0		5.0	100	66	SANDSTONE; gray; hard; slightly weathered; very thinly bedded; closely to medium fractured. Stratum RQD=57%	834.2
22.0		5.0	100	66	SANDSTONE, clayey; gray; very soft to medium; slightly weathered; very thinly bedded; closely fractured. Stratum RQD=53%	828.0
ELEV 824.4 0 HRS. 4/12/06 27.0		5.0	100	20	SANDSTONE; gray; hard; slightly weathered; very thinly bedded; closely fractured. Stratum RQD=22%	823.5
ELEV 824.2 24 HRS. 4-13-06 30.0		3.0	100	27	SANDSTONE, silty; gray; hard; slightly weathered; medium bedded; widely fractured. Stratum RQD=27%	820.5
					Bottom of hole.	

WKB-035
STA 1958+48, 57.73' lt
ELEVATION 850.3

G.S.E. 850.3

A	B	C	D	E	DESCRIPTION	
					Asphalt.	850.3
					Red Brick	849.6
3.0	50/0	0.0			GRAVEL and BRICK FRAGMENTS (fill).	848.8
6.0	5-5-5	1.2				844.7
7.5	7-6-8	0.8			CLAY, gravelly with sand; dark gray; moist; stiff.	
9.0	20-8-7	0.4				841.3
10.5	6-8-8	0.7			GRAVEL, sandy; gray and orange; moist; medium dense.	
12.0	3-5-9	0.8				
13.5	6-10-12	0.5				
15.0	6-11-10	0.4				834.9
15.4	50/.4	0.3				
17.4		1.3	67	0	CONCRETE.	
TRE 829.9 20.4		3.0	100	0		829.9
25.4		5.0	100	11	CLAYSTONE, sandy; gray; very soft; highly weathered; extremely closely fractured. Stratum RQD=9%	
ELEV 820.5 24 HRS. 4-13-06 30.4		5.0	100	8	SANDSTONE, fine grained; gray; hard; slightly to moderately weathered; intensely bedded; very closely fractured. Stratum RQD=6%	824.0
35.4		5.0	100	34	SANDSTONE, fine grained; light gray; hard; slightly weathered; thinly bedded; closely fractured. Stratum RQD=60%	817.4
40.4		5.0	100	44	Clayey SILTSTONE; gray, soft; moderately weathered; very thinly bedded; closely fractured. Stratum RQD=0%	810.9
45.4		4.8	97	52	LIMESTONE; light gray; very hard; slightly weathered; very thinly bedded; widely fractured. Stratum RQD=96%	807.8
ELEV 800.8 0 HRS. 4/12/06 50.4		5.0	100	100		799.9
					Bottom of hole.	

WINGWALL F

WKB-034
STA 1958+84, 62.16' lt
ELEVATION 823.4

G.S.E. 823.4

A	B	C	D	E	DESCRIPTION	
ELEV 822.4 0 HRS. 4/17/06 1.5	3-1-3	0.1			SAND, gravelly; brown; moist; very loose.	823.4
2.3	5-50/.3	0.6				821.9
TRE 819.4 3.0	50/0	0.0			GRAVEL, sandy; gray; moist; very dense.	819.4
7.0		3.0	100	0	SILTSTONE, sandy; gray; medium; moderately weathered; intensely bedded; very closely fractured. Stratum RQD=20%	
12.0		4.8	95	40		811.9
17.0		5.0	100	56	LIMESTONE; light gray; very hard; slightly weathered; thinly bedded; closely to medium fractured. Stratum RQD=78%	
22.0		5.0	100	98		801.9
27.0		5.0	100	98	SILTSTONE, shaly; gray; medium; moderately weathered; intensely bedded; very closely to medium fractured. Stratum RQD=96%	796.4
No 24 HR Water Reading Taken					Bottom of hole.	

ROCK SOCKET ELEVATIONS

LOCATIONS	BOTTOM-OF-ROCK SOCKET ELEVATION (FEET)	ROCK SOCKET LENGTH (FEET)
ABUTMENT 3 (8 TANGENT CAISSONS)	VARIES 820.00 LT TO 810.00 RT	9
WINGWALL B (2 CAISSONS)	VARIES 830.00 RT TO 841.50 LT	5
WINGWALL F (5 CAISSONS)	VARIES 810.00 LT TO 825.75 RT	9

LEGEND

COLUMN A - DENOTES DEPTH FOR BOTTOM OF SPOON SAMPLE OR BOTTOM OF CORE RUN IN FEET.
COLUMN B - DENOTES NUMBER OF BLOWS ON SPOON SAMPLER FOR EVERY 6" OR AS NOTED.
COLUMN C - DENOTES SPOON SAMPLER OR CORE RECOVERY IN FEET.
COLUMN D - DENOTES CORE RECOVERY IN PERCENT.
COLUMN E - DENOTES ROCK QUALITY DESIGNATION (RQD) IN PERCENT.

ELEV. / HR. / DATE — GROUND WATER ELEVATION IN FEET.

GSE INDICATES EXISTING GROUND SURFACE ELEVATION IN FEET.
TRE INDICATES TOP OF ROCK ELEVATION IN FEET.
BFE INDICATES BOTTOM OF FOOTING ELEVATION IN FEET.
TRSE TOP OF ROCK SOCKET ELEVATION IN FEET.
BRSE BOTTOM OF ROCK SOCKET ELEVATION IN FEET.

NOTES:

1. THE CORE BORING LOGS AND RELATED INFORMATION DEPICT SUBSURFACE CONDITIONS ONLY AT THE SPECIFIC LOCATIONS AND DATES INDICATED. SOIL AND ROCK CONDITIONS AND GROUNDWATER LEVELS AT OTHER LOCATIONS MAY DIFFER FROM THE CONDITIONS OCCURRING AT THESE BORING LOCATIONS. ALSO, THE PASSAGE OF TIME MAY RESULT IN A CHANGE OF THE CONDITIONS AT THESE BORING LOCATIONS.
2. THIS SHEET IS INCLUDED FOR THE CONVENIENCE OF THE DEPARTMENT AND IS NOT A PART OF THE CONTRACT DRAWINGS. (SEE PUBLICATION 408/2000, SECTION 102.05).
3. THE CLASSIFICATIONS OF THE MATERIALS ENCOUNTERED HAVE BEEN VERIFIED. RAF

5 0 5 FEET
VERTICAL SCALE

PREPARED BY:
AWK CONSULTING ENGINEERS, INC.
PITTSBURGH, PA 15235

DATE: 7/3/07

COMMONWEALTH OF PENNSYLVANIA — REGISTERED PROFESSIONAL — ROBERT A. FAIRBANK — GEOLOGIST No. PG-000751-G

COMMONWEALTH OF PENNSYLVANIA
DEPARTMENT OF TRANSPORTATION

ARMSTRONG COUNTY
SR 1038 SECTION 150
SEG 0040 OFFSET 1110
SR 1038-150 STA 1956+35.83 AND SR 4025 OVER BUFFALO AND PITTSBURGH RAILROAD
4 SPAN STEEL MULTI-GIRDER BRIDGE AND SINGLE SPAN ROLLED BEAM T-SPAN
STRUCTURE BORING LOGS

RECOMMENDED _____

SHEET 96 OF 97
S-27038

A-00122496

DRAWN BY: MEL	DATE: 06-25-07	CHK'D BY: MCM	DATE: 06-25-07	APR'D BY: RAF	DATE: 06-25-07

ELEVATION, FEET

G:\PLEC051601\West Kittanning Bridge\PS&E_SUB_ENG051601_B_SL08.dgn
7/3/2007 12:32:23 PM

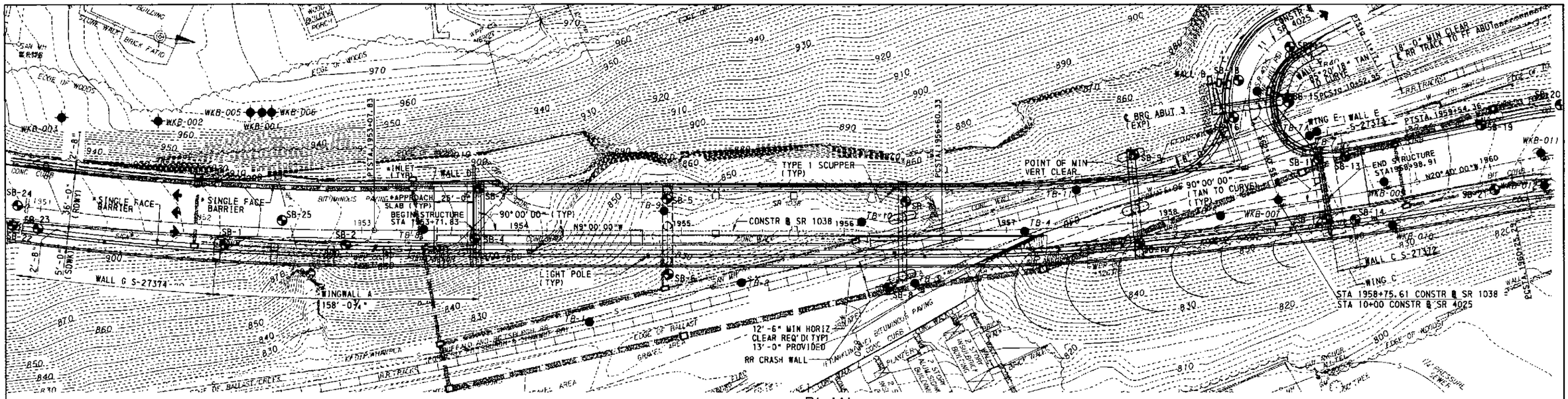
WKB-001
WKB-002
WKB-003
WKB-004
WKB-005
WKB-006
WKB-007
WKB-008
WKB-009
WKB-010
WKB-011
SB-1
SB-2
SB-3
SB-4
SB-5
SB-6
SB-7
SB-8
SB-9
SB-10
SB-11
SB-12
SB-13
SB-14
SB-15
SB-16
SB-17
SB-18
SB-19
SB-20
SB-21
SB-22
SB-23
SB-24
SB-25
TB-1
TB-2
TB-3
TB-4
TB-5
TB-6
TB-7
TB-8
TB-9
TB-10
TB-11
SINGLE FACE BARRIER
SINGLE FACE BARRIER
INLET (TYP)
TYPE 1 SCUPPER (TYP)
APPROACH SLAB (TYP)
BEGIN STRUCTURE STA 1953+71.83
90° 00' 00" (TYP)
N9° 00' 00"W
CONSTR ℄ SR 1038
LIGHT POLE (TYP)
WINGWALL A
158'-0¾"
WALL G S-27374
12'-6" MIN HORIZ CLEAR REQ'D (TYP)
13'-0" PROVIDED
RR CRASH WALL
BUFFALO AND PITTSBURGH RAILROAD
RR TRACKS
EDGE OF BALLAST
GRAVEL AREA
BITUMINOUS PAVING
CONC CURB
CONC WALK
PLANTERS
ASPHALT PAVING
CONC CURB
SLOPE PAVING
CONC WALL
SLOPE PAVING
CONC WALL
SLOPE PAVING
CONC WALL

DRAWING INDEX

SHEET NO.	TITLE	SHEET NO.	TITLE
1	GENERAL PLAN AND ELEVATION	50	SHEAR TABLES
2	DRAWING INDEX	51	SECTION PROPERTIES 1
3	RATING TABLES	52	SECTION PROPERTIES 2
4	QUANTITIES	53	STEEL DIAPHRAGM DETAILS 1
5	GENERAL NOTES 1	54	STEEL DIAPHRAGM DETAILS 2
6	GENERAL NOTES AND DEMOLITION PLAN	55	STEEL DIAPHRAGMS 3
7	STAKE-OUT PLAN	56	BOLTED SOLE PLATE DETAILS & BEARING KEY PLAN
8	ABUTMENT 1 PLAN AND ELEVATION	57	DISC BEARINGS - EXPANSION GUIDED
9	ABUTMENT 1 FOOTING PLAN	58	DISC BEARINGS - EXPANSION NON-GUIDED
10	ABUTMENT 1 SECTIONS	59	DISC BEARINGS - FIXED
11	PIER C1 DETAILS	60	DISC BEARING NOTES
12	PIER C1 SECTIONS	61	DISC BEARING DESIGN LOADS 1
13	PIER C2 THRU C5 DETAILS	62	DISC BEARING DESIGN LOADS 2
14	PIERS C2 THRU C5 SECTIONS	63	CONCRETE DIAPHRAGM DETAILS ABUT 3
15	WINGWALL A ELEVATION	64	DECK PLAN WINGWALL A
16	WINGWALL A SECTIONS	65	TYPICAL DECK SECTION WINGWALL A
17	WINGWALL A ANCHOR DETAILS	66	DECK PLAN 1
18	PIER 1 PLAN AND ELEVATION	67	DECK PLAN 2
19	PIER 1 SECTIONS	68	DECK PLAN 3
20	PIER 2 PLAN AND ELEVATION	69	DECK PLAN 4
21	PIER 2 SECTIONS & DETAILS	70	TYPICAL DECK SECTION 1
22	PIER 3 PLAN AND ELEVATION	71	TYPICAL DECK SECTION 2
23	PIER 3 SECTIONS	72	TYPICAL DECK SECTION 3
24	ABUTMENT 2 PLAN AND ELEVATION	73	LIGHT POLE SUPPORT DETAILS
25	ABUTMENT 2 FOOTING PLAN	74	CONTOUR PLAN
26	ABUTMENT 2 SECTIONS	75	DECK ELEVATIONS
27	ABUTMENT 2 WING DETAILS	76	TOOTH EXPANSION DAM DETAILS 1
28	ABUTMENT 3 PLAN	77	TOOTH EXPANSION DAM DETAILS 2
29	ABUTMENT 3 ELEVATION	78	DRAINAGE DETAILS ABUT 1 & PIER 1
30	ABUTMENT 3 WALLS	79	DRAINAGE DETAILS PIERS 2 & 3
31	ABUTMENT 3 WALL SECTIONS	80	DRAINAGE DETAILS T-SPAN & ABUTMENT 2
32	FRAMING PLAN WINGWALL A	81	ABUTMENT 1 REINFORCING BAR SCHEDULE
33	BOX BEAM REINFORCEMENT DETAILS	82	PIER C1 THRU C5 REINFORCEMENT BAR SCHEDULE
34	BOX BEAM FABRICATION DETAILS	83	WINGWALL A REINF BAR SHCEDULE
35	DISC BEARINGS WINGWALL A	84	PIERS 1, 2 & 3 REINFORCEMENT BAR SCHEDULE
36	ELASTOMERIC BEARINGS - WINGWALL A	85	ABUTMENT 2 REINFORCING BAR SCHEDULE
37	DIAPHRAGM DETAILS 1 WINGWALL A	86	ABUTMENT 3 REINFORCING BAR SCHEDULE
38	DIAPHRAGM DETAILS 2 WINGWALL A	87	DECK REINFORCEMENT BAR SCHEDULE
39	FRAMING PLAN 1	88	STRUCTURE BORING LOGS
40	FRAMING PLAN 2	89	STRUCTURE BORING LOGS
41	GIRDER ELEVATION G1 AND G2	90	STRUCTURE BORING LOGS
42	GIRDER ELEVATION G3 THRU G5	91	STRUCTURE BORING LOGS
43	FIELD SPLICE DETAILS 1	92	STRUCTURE BORING LOGS
44	FIELD SPLICE DETAILS 2	93	STRUCTURE BORING LOGS
45	T-SPAN GIRDER DETAILS 1	94	STRUCTURE BORING LOGS
46	T-SPAN GIRDER DETAILS 2	95	STRUCTURE BORING LOGS
47	T-SPAN GIRDER DETAILS 3	96	STRUCTURE BORING LOGS
48	CAMBER TABLE SR1038	97	STRUCTURE BORING LOGS
49	MOMENT TABLES		

CERTIFIED CORRECT PLANS

Engineer

Approved by Bureau of Transportation & Safety

PENNA. PUBLIC UTILITY COMMISSION

ATTEST

Secretary

Mark	Description	By	Chk'd.	Recm'd.	Date
REVISIONS					

DESIGNED BY	KAM
DRAWN BY	CB
CHECKED BY	MP

DESCRIPTION	DWG. NO.	APP. DATE
BRIDGE APPROACH SLAB	RC-23M	3-30-06
BACKFILL AT STRUCTURES	RC-12M	3-30-06
CLASSIFICATION OF EARTHWORK FOR STRUCTURES	RC-11M	4-15-04
GENERAL NOTES AND LEGENDS FOR SOIL/ROCK DESCRIPTION	BC-795M	1-21-03
TYPICAL WATERPROOFING AND EXPANSION DETAILS	BC-788M	1-21-03
MISCELLANOUS PRESTRESS DETAILS	BC-775M	7-29-05
NEOPRENE STRIP SEAL	BC-767M	7-24-06
TOOTH EXPANSION DAM	BC-762M	7-24-06
BEARINGS	BC-755M	7-29-05
STEEL DIAPHRAGMS	BC-754M	7-24-06
STEEL GIRDER DETAILS	BC-753M	7-29-05
CONCRETE DECK SLAB DETAILS	BC-752M	7-29-05
BRIDGE DRAINAGE	BC-751M	7-29-05
REINFORCEMENT BAR FABRICATION DETAILS	BC-736M	1-21-03
WALL CONSTRUCTION & EXPANSION JOINT DETAILS	BC-735M	1-21-03
ANCHOR SYSTEMS	BC-734M	4-15-04
PERMANENT METAL DECK FORMS	BC-732M	7-24-06
LIGHTING POLE ANCHORAGE	BC-722M	7-24-06
ELECTRICAL DETAILS	BC-721M	7-29-05
ALUMINUM PEDESTRIAN RAILING	BC-716M	7-24-06
PA HT BRIDGE BARRIER MISC. DETAILS	BC-707M	7-24-06
PROTECTIVE FENCE	BC-701M	7-24-06

SUPPLEMENTAL DRAWINGS

COMMONWEALTH OF PENNSYLVANIA
DEPARTMENT OF TRANSPORTATION

ARMSTRONG COUNTY
SR 1038 SECTION 150
SEG 0040 OFFSET 1110
SR 1038-150 STA 1956+35.83 AND SR 4025 OVER
BUFFALO AND PITTSBURGH RAILROAD
4 SPAN STEEL MULTI-GIRDER BRIDGE AND
SINGLE SPAN ROLLED BEAM T-SPAN
DRAWING INDEX

A-00122496

RECOMMENDED

SHEET 2 OF 97

S-27038

BRIDGE LOAD RATING (LRFD) - SR 1038

ADTT 497 (2007)
ADTT 739 (2027)
WELDED STEEL PLATE GIRDERS

GIRDER 1		WITHOUT FUTURE WEARING SURFACE						WITH FUTURE WEARING SURFACE					
		H20	HS20	ML80	PHL-93	P82	TK-527	H20	HS20	ML80	PHL-93	P82	TK-527
INVENTORY RATING (IR)	DISTRIBUTION FACTOR	0.924	0.924	0.900	0.924	-----	0.900	0.927	0.927	0.900	0.927	-----	0.900
	LOCATION (SPAN)	116.00 (1)	116.00 (1)	111.38 (3)	116.00 (1)	-----	111.38 (3)	142.47 (3)	142.47 (3)	111.38 (3)	142.47 (3)	-----	111.38 (3)
	LIMIT STATE	SER-II	SER-II	STR-I	SER-II	----	STR-I	STR-I	STR-I	STR-I	STR-I	-----	STR-I
	RATING FACTOR	1.897(M)	1.897 (M)	1.826 (S)	1.237 (M)	----	1.733 (S)	1.601 (M)	1.601 (M)	1.660 (S)	1.043 (M)	-----	1.576 (S)
OPERATING RATING (OR)	DISTRIBUTION FACTOR	0.924	0.924	0.900	0.924	0.900	0.900	0.927	0.927	0.900	0.924	0.900	0.900
	LOCATION (SPAN)	116.00 (1)	116.00 (1)	111.38 (3)	116.00 (1)	111.38 (3)	111.38 (3)	142.47 (3)	142.47 (3)	111.38 (3)	116 00 (1)	111.38 (3)	111.38 (3)
	LIMIT STATE	SER-IIA	SER-IIA	STR-II	SER-IIA	STR-II	STR-II	STR-II	STR-II	STR-II	SER-IIA	STR-II	STR-II
	RATING FACTOR	2.466 (M)	2.466 (M)	2.366 (S)	1.608 (M)	1.170 (S)	2.245 (S)	2.075 (M)	2.075 (M)	2.152 (S)	1.465 (M)	1.063 (S)	2.042 (S)

GIRDER 4		WITHOUT FUTURE WEARING SURFACE						WITH FUTURE WEARING SURFACE					
		H20	HS20	ML80	PHL-93	P82	TK-527	H20	HS20	ML80	PHL-93	P82	TK-527
INVENTORY RATING (IR)	DISTRIBUTION FACTOR	0.896	0.896	1.001	0.896	----	1.001	0.896	0.896	1.001	0.896	-----	1.001
	LOCATION (SPAN)	145.15 (3)	145.15 (3)	32.09 (3)	145.15 (3)	----	32.09 (3)	145.15 (3)	145.15 (3)	32.09 (3)	145.15 (3)	-----	32.09 (3)
	LIMIT STATE	SER-II	SER-II	STR-I	SER-II	----	STR-I	SER-II	SER-II	STR-I	SER-II	-----	STR-I
	RATING FACTOR	1.787 (M)	1.787 (M)	1.778 (S)	1.170 (M)	-----	1.688 (S)	1.627 (M)	1.627 (M)	1.665 (S)	1.066 (M)	-----	1.582 (S)
OPERATING RATING (OR)	DISTRIBUTION FACTOR	0.896	0.896	1.001	0.896	1.001	1.001	0.896	0.896	1.001	0.896	1.001	1.001
	LOCATION (SPAN)	145.15 (3)	145.15 (3)	32.09 (3)	145.15 (3)	32.09 (3)	32.09 (3)	145.15 (3)	145 15 (3)	32.09 (3)	145.15 (3)	5 831 (4)	32 09 (3)
	LIMIT STATE	SER-IIA	SER-IIA	STR-II	SER-IIA	STR-II	STR-II	SER-IIA	SER-IIA	STR-II	SER-IIA	STR-II	STR-II
	RATING FACTOR	2.324 (M)	2.324 (M)	2.305 (S)	1.522 (M)	1.141(S)	2.189 (S)	2.116 (M)	2.116 (M)	2.159 (S)	1.385 (M)	1.068 (S)	2.050 (S)

CRITICAL MEMBER	GIRDER 4
MAXIMUM FACTORED FLEXURAL RESISTANCE	-11810 KIP-FT (STR-I)
	-8824 KIP-FT (SER-IIA)
LOCATION	145.15' - SPAN 3
MAXIMUM FACTORED SHEAR RESISTANCE	489 KIP
LOCATION	5.831' - SPAN 4

BRIDGE LOAD RATING (LRFD) - SR 4025

ADTT 45 (2007)
ADTT 68 (2027)
STEEL ROLLED BEAMS

BEAM 1		WITHOUT FUTURE WEARING SURFACE						WITH FUTURE WEARING SURFACE					
		H20	HS20	ML80	PHL-93	P82	TK-527	H20	HS20	ML80	PHL-93	P82	TK-527
INVENTORY RATING (IR)	DISTRIBUTION FACTOR	0.378	0.378	0.378	0.378	----	0.378	0.378	0.378	0.378	0.378	----	0.378
	LOCATION (SPAN)	26.40'	26.40'	26.40'	26.40'	----	26.40'	26.40'	26.40'	26.40'	26.40'	----	26.40'
	LIMIT STATE	STR-I	STR-I	STR-I	STR-I	----	STR-I	STR-I	STR-I	STR-I	STR-I	----	STR-I
	RATING FACTOR	2.295 (M)	1.620 (M)	1.324 (M)	1.165 (M)	----	1.403 (M)	1.976 (M)	1.395 (M)	1.140 (M)	1.003 (M)	----	1.208 (M)
OPERATING RATING (OR)	DISTRIBUTION FACTOR	0.378	0.378	0.378	0.378	0.378	0.378	0.378	0.378	0.378	0.378	0.378	0.378
	LOCATION (SPAN)	26.40'	26.40'	26.40'	26.40'	26.40'	26.40'	26.40'	26.40'	26.40'	26.40'	26.40'	26.40'
	LIMIT STATE	STR-II	STR-II	STR-II	SER-IIA	STR-II	STR-II	STR-II	STR-II	STR-II	SER-IIA	STR-II	STR-II
	RATING FACTOR	2.975 (M)	2.100 (M)	1.716 (M)	1.869 (M)	1.286 (M)	1.819 (M)	2.562 (M)	1.808 (M)	1.478 (M)	1.456 (M)	1.108 (M)	1.566 (M)

BEAM 5		WITHOUT FUTURE WEARING SURFACE						WITH FUTURE WEARING SURFACE					
		H20	HS20	ML80	PHL-93	P82	TK-527	H20	HS20	ML80	PHL-93	P82	TK-527
INVENTORY RATING (IR)	DISTRIBUTION FACTOR	0 860	0 860	0.860	0.860	----	0.860	0 860	0.860	0 860	0.860	----	0.860
	LOCATION (SPAN)	17.55'	17.55'	17.55'	19.83'	----	17.55'	17.55'	17.55'	19.50'	19.83'	----	17.55'
	LIMIT STATE	SER-II	SER-II	SER-II	SER-II	----	SER-II	SER-II	SER-II	SER-II	SER-II	----	SER-II
	RATING FACTOR	2.342 (M)	1.821 (M)	1.404 (M)	1.225 (M)	----	1.508 (M)	2.236 (M)	1.739 (M)	1.340 (M)	1.189 (M)	----	1.438 (M)
OPERATING RATING (OR)	DISTRIBUTION FACTOR	0.860	0 860	0.860	0.860	0.860	0 860	0.860	0.860	0 860	0.860	0.860	0.860
	LOCATION (SPAN)	17.55'	17.55'	17.55'	19.83'	19.50'	17.55'	17.55'	17.55'	19.50'	19.83'	19.50'	17.55'
	LIMIT STATE	SER-IIA	SER-IIA	SER-IIA	SER-IIA	SER-IIB	SER-IIA	SER-IIA	SER-IIA	SER-IIA	SER-IIA	SER-IIB	SER-IIA
	RATING FACTOR	3.045 (M)	2.367 (M)	1.825 (M)	1.593 (M)	1.348 (M)	1.958 (M)	2.907 (M)	2.260 (M)	1.742 (M)	1.520 (M)	1.287 (M)	1.869 (M)

CRITICAL MEMBER	BEAM 1
MAXIMUM FACTORED FLEXURAL RESISTANCE	2943 KIP-FT.
LOCATION	26.40'
MAXIMUM FACTORED SHEAR RESISTANCE	529.70 KIP
LOCATION	52.36'

RATING NOTES

- BRIDGE LOAD RATING BASED ON LRFD METHOD
- INCLUDES FUTURE WEARING SURFACE OF 30 LB PER SQUARE FOOT WHERE APPLICABLE
- FACTORED RESISTANCE AT POINTS OF GOVERNING OPERATING RATING BASED AS PER DM-4 (2000)
- RATINGS ARE BASED ON THE FOLLOWING CONSTRUCTION SEQUENCE: THE STEEL FOR THE MAIN BRIDGE (SR1038) AND T-SPAN IS ERECTED AND THE DECK IN ACCORDANCE WITH THE DECK PLACEMENT SEQUENCE SHOWN IN THESE PLANS IS POURED.
- THE DISTRIBUTION FACTOR IS THE VEHICULAR LOAD DISTRIBUTION FACTOR TO PRODUCE THE GIVEN RATING
- FOR GIRDER G1, THE DISTRIBUTION FACTOR IS FOR LIVE LOAD ON THE MAIN BRIDGE (SR1038) ONLY. THE RATING FACTOR FOR G1 INCLUDES PHL-93 LOADING ON THE T-SPAN MULTIPLIED BY A MULTI PRESENCE FACTOR OF 0.85 COMBINED WITH THE LIVE LOADING FROM THE MAIN BRIDGE.
- P-82 RATINGS ARE BASED ON MULTI-LANE DISTRIBUTION FACTORS
- THE P-82 RATINGS FOR GIRDER G1 DO NOT INCLUDE ANY LIVE LOAD EFFECTS FROM THE T-SPAN

LEGEND

M DENOTES FLEXURE GOVERNS
S DENOTES SHEAR GOVERNS

CERTIFIED PROJECT PLANS
Engineer
Approved by Bureau of Transportation & Safety
PENNA. PUBLIC UTILITY COMMISSION
Secretary

Mark	Description	By	Chk'd.	Recm'd.	Date
REVISIONS					

COMMONWEALTH OF PENNSYLVANIA
DEPARTMENT OF TRANSPORTATION

ARMSTRONG COUNTY
SR 1038 SECTION 150
SEG 0040 OFFSET 1110
SR 1038-150 STA 1956+35.83 AND SR 4025 OVER
BUFFALO AND PITTSBURGH RAILROAD
4 SPAN STEEL MULTI-GIRDER BRIDGE AND
SINGLE SPAN ROLLED BEAM T-SPAN
RATING TABLES

RECOMMENDED JBR 9/2007

SHEET 3 OF 97
S-27038

A-00122496

DESIGNED BY	RES
DRAWN BY	CB
CHECKED BY	MP

KEITH A. MICHAEL
PROFESSIONAL
ENGINEER
COMMONWEALTH OF PENNSYLVANIA

R:\BPS\projects\4525\Proj_Files_Utilities\Final\LoadRatings.dgn 7/3/2007

APPROXIMATE QUANTITIES - BRIDGE STRUCTURE, AS DESIGNED

ITEM NUMBER	ITEM	UNIT	LOCATION									
			WINGWALL A	ABUT 1	PIER 1	PIER 2	PIER 3	ABUT 2	ABUT 3	SUPER-STRUCTURE	DECK	TOTAL
8140-0001	BRIDGE STRUCTURE AS DESIGNED, S-27038 (A)	LS	—	—	—	—	—	—	—	—	—	LS
(F)	CLASS 3 EXCAVATION	CY	860	930	—	111	111	1545	420	—	—	3977
(F)	SELECTED BORROW EXCAVATION, STRUCTURE BACKFILL	CY	—	450	—	—	—	400	240	—	—	1090
(F)	NO.57 COARSE AGGREGATE	CY	325	2	—	—	—	—	—	—	—	327
(F)	CLASS AAA CEMENT CONCRETE (B)	CY	81	—	—	—	—	—	—	—	950	1031
(F)	CLASS AA CEMENT CONCRETE	CY	27	40	—	—	—	31	—	—	161	259
(F)	CLASS A CEMENT CONCRETE (G)	CY	243	151	141	205	180	363	300	—	—	1583
(F)	2" CONDUIT IN STRUCTURE	LF	161	2	—	—	—	10	—	—	524	697
(F)	LIGHTING POLE ANCHORAGE	EA	1	—	—	—	—	—	—	—	3	4
(F)	FABRICATED STRUCTURAL STEEL (AASHTO M270 GRADE 50W) (A)	LB	—	—	—	—	—	—	—	967740	—	967740
(F)	SHEAR CONNECTORS	EA	—	—	—	—	—	—	—	9054	—	9054
(F)	PRESTRESSED CONCRETE SPREAD BOX BEAMS, 36"X17" (A)	LF	461	—	—	—	—	—	—	—	—	461
(F)	TOOTH EXPANSION DAM WITH DRAIN TROUGH	LB	—	14200	—	—	—	—	—	—	—	14200
(F)	NEOPRENE STRIP SEAL DAM, (4" MOVEMENT)	LF	—	—	—	—	—	59	—	—	—	59
(F)	MEMBRANE WATERPROOFING	SY	—	—	—	—	—	—	12	—	—	12
(F)	PA HT BRIDGE BARRIER RAILING, TYPICAL SIDEWALK	LF	161	2	—	—	—	10	—	—	527	700
(F)	PEDESTRIAN RAILING	LF	165	2	—	—	—	10	—	—	527	704
(F)	PROTECTIVE COATING FOR REINFORCED CONCRETE SURFACES (PENETRATING SEALERS, BRIDGE SUPERSTRUCTURE)	SY	333	—	—	—	—	—	—	—	3760	4093
(F)	PROTECTIVE COATING FOR REINFORCED CONCRETE SURFACES (PENETRATING SEALERS, REINFORCED CONCRETE SUBSTRUCTURE SURFACES)	SY	350	140	205	220	190	230	275	—	—	1610
(F)	HIGH LOAD MULTI-ROTATIONAL BEARINGS-FIXED, DISC BEARING	EA	—	—	—	—	5	—	—	—	—	5
(F)	HIGH LOAD MULTI-ROTATIONAL BEARINGS-GUIDED EXPANSION, DISC BEARING	EA	—	2	2	2	—	2	—	—	—	8
(F)	HIGH LOAD MULTI-ROTATIONAL BEARINGS-NON-GUIDED EXPANSION, DISC BEARING	EA	3	3	3	3	—	3	5	—	—	17
(F)	SCUPPER, TYPE 1	EA	—	1	1	2	2	2	—	—	3	11
(F)	DOWNSPOUTING	LF	—	10	62	116	96	83	35	—	155	560
(F)	6" STRUCTURE FOUNDATION DRAIN	LF	167	—	—	—	—	70	—	—	—	237
(F)	6" V.C. OR PL.C.C. PIPE CLASS 1, OR P.V.C. PIPE (SCHEDULE 40)	LF	—	7	—	—	—	6	—	—	—	13
(F)	SILICONE JOINT SEALING SYSTEM (A)	LF	155	14	—	—	—	—	33	—	—	202
(F)	POST-TENSIONED ROCK ANCHORS (A)	EA	8	—	—	—	—	—	—	—	—	8
(F)	DOWEL HOLES 16" DEPTH	EA	—	—	—	—	—	—	151	—	—	151
AND 1002-0053	REINFORCEMENT BARS, EPOXY COATED (C)	LB	39975	10650	19700	28030	29880	27395	17520	610	270850	444610
AND 9006-0207	36" DIA DRILLED CAISSONS, SHAFT SECTION IN SOIL (A)	LF	19	—	—	—	—	276	—	—	—	295
AND 9006-0211	60" DIA DRILLED CAISSONS, SHAFT SECTION IN SOIL (A)	LF	—	—	22	55	44	—	130	—	—	251
AND 9006-0231	60" DIA DRILLED CAISSONS, SHAFT SECTION IN ROCK (A)	LF	97	7	5	—	14	—	—	—	—	123
AND 9006-0306	30" DIA DRILLED CAISSONS, ROCK SOCKET (A)	LF	5	—	—	—	—	95	42	—	—	142
AND 9006-0330	54" DIA DRILLED CAISSONS, ROCK SOCKET (A)	LF	45	7	45	47	46	—	150	—	—	340
5018-0001	REMOVAL OF EXISTING BRIDGE, MODIFIED (A)	LS	—	—	—	—	—	—	—	—	—	LS
1091-0335	EPOXY INJECTION CRACK SEAL (E)	DOLLA	—	—	—	—	—	—	—	—	5500	5500
9073-0001	DISPOSAL OF BRIDGE WASTE (A)	LS	—	—	—	—	—	—	—	—	—	LS
9077-0001	WORKER HEALTH AND SAFETY (A)	LS	—	—	—	—	—	—	—	—	—	LS
9203-0001	TEMPORARY EXCAVATION SUPPORT AND PROTECTION SYSTEM (A)	LS	—	—	—	—	—	—	—	—	—	LS

ALTERNATE STRUCTURE ITEMS

ITEM NUMBER	ITEM	UNIT	TOTAL
8140-0001	BRIDGE STRUCTURE AS DESIGNED, S-27038 (A)	LS	1
8000-0001	PRESTRESSED CONCRETE BRIDGE STRUCTURE (A)	LS	1
8100-0001	STEEL BRIDGE STRUCTURE (A)	LS	1

LEGEND

(A) SEE SPECIAL PROVISIONS.

(B) INCLUDES CLASS AAA CEMENT CONCRETE IN DECK SLAB AND APPROXIMATELY 2.5 CY (WINGWALL A)/71 CY(BRIDGE AND T-SPAN) IN VALLEYS OF METAL DECK FORMS.

(C) FOR AS DESIGNED STRUCTURE, INCLUDED IN BID ITEMS. FOR ALTERNATE DESIGNS, INCLUDED IN STRUCTURE LUMP SUM BID ITEM.

(E) QUANTITY IS FOR SEALING CRACKS IN THE DECK SLAB AS DIRECTED BY THE ENGINEER.

(F) ITEMS IN BRIDGE STRUCTURE LUMP SUM ITEM 8140-0001 GIVEN FOR INFORMATION ONLY.

(G) INCLUDES 1080 SF OF STEEL WELDED WIRE FABRIC, EPOXY COATED AT ABUTMENT 3.

Mark	Description	By	Chk'd.	Recm'd.	Date
	REVISIONS				

DESIGNED BY	KAM
DRAWN BY	CB
CHECKED BY	MP

COMMONWEALTH OF PENNSYLVANIA
DEPARTMENT OF TRANSPORTATION

ARMSTRONG COUNTY
SR 1038 SECTION 150
SEG 0040 OFFSET 1110
SR 1038-150 STA 1956+35.83 AND SR 4025 OVER BUFFALO AND PITTSBURGH RAILROAD
4 SPAN STEEL MULTI-GIRDER BRIDGE AND SINGLE SPAN ROLLED BEAM T-SPAN
QUANTITIES

COMMONWEALTH OF PENNSYLVANIA REGISTERED PROFESSIONAL KEITH A. MICHAEL ENGINEER

RECOMMENDED JUL 06 2007

SHEET 4 OF 97

S-27038

A-00122496

h:\projects\0452\structure\dgk\tonlaqe\final\qty1.dgn 7/19/2007

GENERAL NOTES

- PROVIDE MATERIALS AND PERFORM WORK IN ACCORDANCE WITH SPECIFICATIONS, PUBLICATION 408/2007, INCLUDING CURRENT SUPPLEMENTS, AASHTO/AWS D1.5M/1.5:2002 BRIDGE WELDING CODE USE AASHTO/AWS D1.1/D1.1M:2002 FOR WELDING NOT CONVERTED IN AASHTO/AWS D1.5M/D1.5:2002 AND CONTRACT SPECIAL PROVISIONS.
- SUPERSTRUCTURE DIMENSIONS SHOWN ARE FOR A NORMAL TEMPERATURE OF 68 DEGREES F.
- ALL DIMENSIONS SHOWN ARE HORIZONTAL EXCEPT AS NOTED.

DESIGN SPECIFICATIONS:

- AASHTO LRFD BRIDGE DESIGN SPECIFICATIONS, SECOND EDITION, 1998 AND AS SUPPLEMENTED BY DESIGN MANUAL, PART 4, APRIL 2000 (INCLUDING AUG. 2005 REVISIONS)
- LIVE LOAD DISTRIBUTION TO BEAMS IS BASED UPON DESIGN MANUAL, PART 4 DISTRIBUTION FACTORS
- DESIGN IS IN ACCORDANCE WITH THE LRFD METHOD.
- SEISMIC FORCES WERE CONSIDERED FOR ACCELERATION COEFFICIENT OF 0.05.

DESIGN LIVE LOADS:

- PHL93 OR P82 (204 K PERMIT LOAD).
- FATIGUE DESIGN IS BASED ON THE FOLLOWING:

STEEL:	ADT 15938 (2005)	23683 (2025)
	ADTT 479 (2005)	711 (2025)
	(TWO DIRECTIONAL)	
PRESTRESSED CONCRETE:	ADT 15938 (2005)	23683 (2025)
	ADTT 479 (2005)	711 (2025)
	(TWO DIRECTIONAL)	

DEAD LOADS:

- INCLUDES 30 LBS. PER SQ. FT. FOR FUTURE WEARING SURFACE ON THE DECK SLAB.
- INCLUDES 15 LBS. (WEIGHT OF FORMS + WEIGHT OF CONCRETE IN THE VALLEYS OF FORMS) PER SQ. FT. OF DECK AREA FORMED USING PERMANENT METAL DECK FORMS.

CONCRETE NOTES:

- USE CLASS AAA CEMENT CONCRETE IN DECK SLAB AND SIDEWALK.
- USE CLASS AA CEMENT CONCRETE IN BRIDGE BARRIERS, CHEEKWALL, ABUTMENT BACKWALL AND U-WINGS ABOVE BRIDGE SEAT CONSTRUCTION JOINT.
- USE CLASS A CEMENT CONCRETE IN ABUTMENTS BELOW BRIDGE SEAT,PEDESTALS, WINGWALLS, FOOTING AND PIER.
- USE TYPE II SULFATE RESISTANT CEMENT IN ALL SUBSTRUCTURE CONCRETE.
- IF CONCRETE DIAPHRAGMS ARE POURED MONOLITHICALLY WITH DECK, CLASS AAA CEMENT CONCRETE MAY BE USED FOR DIAPHRAGMS AT NO ADDITIONAL COST TO THE DEPARTMENT.
- A HIGHER CLASS CLASS CONCRETE MAY BE SUBSTITUTED FOR A LOWER CLASS CONCRETE AT NO ADDITIONAL COST TO THE DEPARTMENT.
- PROVIDE 2" CONCRETE COVER ON REINFORCEMENT BARS EXCEPT AS NOTED.
- RAKE FINISH ALL HORIZONTAL CONSTRUCTION JOINTS EXCEPT AS INDICATED.
- CHAMFER EXPOSED CONCRETE EDGES 1" X 1" EXCEPT AS NOTED.
- USE EITHER PERMANENT METAL FORMS OR REMOVABLE FORMS TO CONSTRUCT THE DECK SLAB.
- DECK SLAB THICKNESS INCLUDES ½ INCH INTEGRAL WEARING SURFACE.
- PLACE CHEEKWALL CONCRETE AND BACKWALL CONCRETE AFTER BEAMS ARE SET IN POSITION.
- USE RETARDER ADMIXTURE CONFORMING TO PUBLICATION 408 IN CONCRETE DECK SLAB.
- PREPARE BEARING AREAS AS SPECIFIED IN SECTION 1001.3(K)8 OF PUBLICATION 408.
- ABUTMENT BACKWALLS MAY BE PLACED UP TO A CONSTRUCTION JOINT BELOW THE LEVEL OF THE BOTTOM OF DECK SLAB PRIOR TO CONSTRUCTION OF THE DECK.
- APPLY A MEMBRANE WATERPROOFING OVER ALL CONSTRUCTION AND EXPANSION JOINTS IN ABUTMENT AND WINGWALL STEMS.
- APPLY PROTECTIVE COATING FOR REINFORCED CONCRETE SURFACES (PENETRATING SEALER) IN ACCORDANCE WITH PUBLICATION 408, SECTION 1019, TO THE CONCRETE ABUTMENTS, AND PIERS WHERE INDICATED.

REINFORCEMENT:

- USE EPOXY COATED REINFORCEMENT BARS IN THE DECK SLAB, BARRIERS, SIDEWALK, ABUTMENT BACKWALLS, U-WINGS ABOVE THE BRIDGE SEAT CONSTRUCTION JOINT AND ABUTMENT SEAT BARS. ALSO EPOXY-COAT SUBSTRUCTURE REINFORCEMENT BARS AS INDICATED.
- PROVIDE GRADE 60 REINFORCING STEEL BARS THAT MEET THE REQUIREMENTS OF ASTM A615/A 615M-96A, A616/A 616M-96A AND A706/A 706M-96B. DO NOT WELD GRADE 60 REINFORCING STEEL BARS UNLESS SPECIFIED. GRADE 40 REINFORCING STEEL BARS MAY BE SUBSTITUTED WITH A PROPORTIONAL INCREASE IN CROSS SECTIONAL AREA, IF APPROVED BY THE CHIEF BRIDGE ENGINEER. DO NOT USE RAIL STEEL A616/A 616M-96A REINFORCEMENT BARS IN BRIDGE PIERS, ABUTMENTS, SHEAR BLOCKS, BEAMS, FOOTINGS, PILES, PARAPETS OR WHERE BENDING OR WELDING OF THE REINFORCEMENT BARS IS INDICATED.
- PROVIDE MINIMUM LAP SPLICE AND EMBEDMENT LENGTH OF 30 BAR DIAMETERS OR IN ACCORDANCE WITH AASHTO AS MODIFIED BY DESIGN MANUAL PART 4, WHICHEVER IS GREATER.
- WELDING OF REINFORCEMENT BARS DURING FABRICATION OR CONSTRUCTION IS NOT PERMITTED UNLESS SPECIFIED.

STEEL NOTES:

- PROVIDE STRUCTURAL STEEL CONFORMING TO AASHTO M270 GRADE 50W (ASTM A709 GRADE 50W) DESIGNATION, EXCEPT WHERE NOTED OTHERWISE.
- PROVIDE WELDED STUD SHEAR CONNECTORS MANUFACTURED FROM STEEL CONFORMING TO ASTM A108.
- DO NOT USE FORM SUPPORT SYSTEMS WHICH WILL CAUSE UNACCEPTABLE OVERSTRESS OR DEFORMATION TO PERMANENT BRIDGE MEMBERS.
- STABILITY OF PARTIAL AND COMPLETE GIRDERS IS TO BE MAINTAINED BY THE CONTRACTOR DURING ERECTION UNTIL ALL GIRDERS AND DIAPHRAGMS ARE IN-PLACE AND ALL BOLTS ARE PROPERLY INSTALLED. ERECTION LOADS INCLUDING SELF WEIGHT OF STEEL MEMBERS, WIND LOADING AND CONSTRUCTION LIVE LOAD EFFECTS ARE TO BE EVALUATED BY THE CONTRACTOR FOR STABILITY, STRESSES AND DEFLECTIONS ON THE STEEL MEMBERS DURING ANY STAGE OF ERECTION.
- SET ANCHOR BOLTS TO TEMPLATE OR IN PREFORMED HOLES. DO NOT DRILL UNLESS SPECIFICALLY INDICATED ON PLANS. FILL THE PREFORMED HOLES WITH NONSHRINK GROUT. FILL THE CLEARANCE BETWEEN ANCHOR BOLTS AND HOLES IN MASONRY PLATES WITH APPROVED NON HARDENING CAULKING COMPOUND CONFORMING TO SECTION 705.8 OF PUBLICATION 408.
- PAINT STRUCTURAL STEEL IN ACCORDANCE WITH PUBLICATION 408, SECTION 1060 WITHIN THE LIMITS SPECIFIED ON THE GIRDER ELEVATION DRAWINGS INCLUDING ALL BEARINGS AND EXPANSION DAMS. PAINT COLOR SHOULD MATCH THE WEATHERING STEEL ON THE GIRDERS.
- IF THE GIRDERS CANNOT BE SHIPPED IN THE LENGTHS SHOWN ON THE PLANS, FIELD SPLICE(S) WILL BE PERMITTED AT THE REQUEST OF THE CONTRACTOR, BUT NO COMPENSATION WILL BE ALLOWED FOR SPLICES.
- IF THE GIRDERS CAN BE FABRICATED IN LENGTHS LONGER THAN THE SECTIONS SHOWN ON THE PLANS BY ELIMINATING FIELD SPLICES, FIELD SPLICES MAY BE OMITTED AT THE REQUEST OF THE CONTRACTOR. THE CONTRACTOR ASSUMES FULL RESPONSIBILITY FOR SECURING A HAULING PERMIT. APPROVAL FOR ELIMINATION OF A FIELD SPLICE AT THE SHOP DRAWING STAGE DOES NOT OBLIGATE THE DEPARTMENT TO ISSUE A HAULING PERMIT.
- REAMING OF FIELD SPLICES IS REQUIRED IN THE FABRICATOR'S SHOP.
- ALL FASTENERS ARE ⅞" DIAMETER H.S. BOLTS AASHTO M164 (ASTM-A325) TYPE 3 EXCEPT AS NOTED.
- UNDER FULL DEAD LOAD ALL BEAM ENDS TO BE TRULY VERTICAL WITHIN ACCEPTABLE AASHTO/AWS FABRICATION AND CONSTRUCTION TOLERANCES.
- PERFORM PROGRESSIVE GIRDER ASSEMBLY OF EACH ENTIRE GIRDER LINE, AT THE FABRICATION SHOP, AS DIRECTED IN PUBLICATION 408, SECTION 1105.03(G)1, EXCEPT AT THOSE LOCATIONS STIPULATED ON THE PLANS AND/OR SPECIAL PROVISIONS WHICH REQUIRE 100% SHOP ASSEMBLY OF STEEL MEMBERS.

WELDING NOTES:

- WELDING SPECIFICATIONS: AASHTO/AWS/D1.5M/1.5:2002 BRIDGE WELDING CODE AND THE CONTRACT SPECIAL PROVISIONS.
- MAKE TACK WELDS WITH THE SAME TYPE ELECTRODE AND INCORPORATE IN THE FINAL WELD. NO OTHER TACK WELDING WILL BE PERMITTED.
- DO NOT MAKE WELDS BY MANUAL SHIELDED METAL ARC PROCESS FOR PRIMARY GIRDER WELDS SUCH AS FLANGE TO WEB WELDS OR FOR SHOP SPLICES OF WEBS AND FLANGES.
- DO NOT WELD WHEN SURFACES TO BE WELDED ARE MOIST OR EXPOSED TO RAIN, SNOW OR WIND, OR WHEN WELDERS ARE EXPOSED TO INCLEMENT CONDITIONS THAT WILL ADVERSELY AFFECT THE QUALITY OF THE WORK.
- DO NOT WELD OR BURN WHEN THE TEMPERATURE IS BELOW 0-DEGREES F. PREHEAT AND MAINTAIN THE TEMPERATURE OF THE METAL TO AT LEAST 70-DEGREES F WHEN THE TEMPERATURE OF THE METAL IS BETWEEN 0-DEGREES F AND 30-DEGREES F DURING WELDING OR BURNING. EXTEND THE AREA TO BE HEATED 3 INCHES BEYOND THE WELD IN ALL DIRECTIONS.
- REMOVE ANY MOISTURE PRESENT AT POINT OF WELD BY APPLICATION OF HEAT. PROVIDE WINDBREAKS FOR PROTECTION FROM DIRECT WIND.
- PRIOR TO PLACING THE WELD, THOROUGHLY CLEAN ALL PORTIONS OF NEW SURFACES TO RECEIVE WELDS OF ALL FOREIGN MATTER INCLUDING PAINT FILM. FOR A DISTANCE OF 2" FROM EACH SIDE OF THE OUTSIDE LINES OF WELD.
- DO NOT WELD PERMANENT METAL DECK FORMS OR OTHER ATTACHMENTS TO NEW GIRDER TOP FLANGES IN TENSION AREAS. (TENSION AREAS OF THE FLANGES ARE DESIGNATED ON THE PLANS).

UTILITIES:

- COORDINATE, LOCATE AND CONDUCT WORK RELATED TO PUBLIC AND PRIVATE UTILITIES IN ACCORDANCE WITH PUBLICATION 408 SECTIONS 105.06 AND 107.12.

REFERENCE DRAWINGS

- THE FOLLOWING PLANS ARE AVAILABLE UPON REQUEST FROM THE DISTRICT OFFICE

EXISTING BRIDGE		
DWG. NO.	DATE	DESCRIPTION
S-720	07/16/31	SHAWMUT VIADUCT (SHTS B1 THRU B15 AND A1 THRU A4

- THE INFORMATION SHOWN ON THE PLANS FOR THE EXISTING BRIDGE IS NOT PART OF THE PLANS, PROPOSALS, OR CONTRACT AND IS NOT TO BE CONSIDERED A BASIS FOR COMPUTATION OF THE UNIT PRICES USED FOR BIDDING PURPOSES. THERE IS NO EXPRESSED OR IMPLIED AGREEMENT THAT INFORMATION IS CORRECTLY SHOWN. THE BIDDER IS NOT TO RELY ON THIS INFORMATION, BUT IS TO ASSUME THE POSSIBILITY THAT CONDITIONS AFFECTING THE COST AND/OR QUANTITIES OF WORK TO BE PERFORMED MAY DIFFER FROM THOSE INDICATED.
- DO NOT CONSIDER ANY OF THE DATA ON THE EXISTING STRUCTURE SUPPLIED IN THE ORIGIONAL DESIGN DRAWINGS OR MADE AVAILABLE TO YOU BY THE DEPARTMENT OR ITS AUTHORIZED AGENTS AS POSITIVE REPRESENTATIONS OF ANY OF THE CONDITIONS THAT YOU WILL ENCOUNTER IN THE FIELD.

Mark	Description	By	Chk'd.	Recm'd.	Date
REVISIONS					

DESIGNED BY	KAM
DRAWN BY	GCC
CHECKED BY	MP

COMMONWEALTH OF PENNSYLVANIA
DEPARTMENT OF TRANSPORTATION

ARMSTRONG COUNTY
SR 1038 SECTION 150
SEG 0040 OFFSET 1110
SR 1038-150 STA 1956+35.83 AND SR 4025 OVER BUFFALO AND PITTSBURGH RAILROAD
4 SPAN STEEL MULTI-GIRDER BRIDGE AND SINGLE SPAN ROLLED BEAM T-SPAN
GENERAL NOTES 1

RECOMMENDED JUL 8 2008

SHEET 5 OF 97

S-27038

A-00122496

COMMONWEALTH OF PENNSYLVANIA REGISTERED PROFESSIONAL KEITH A MICHAEL ENGINEER

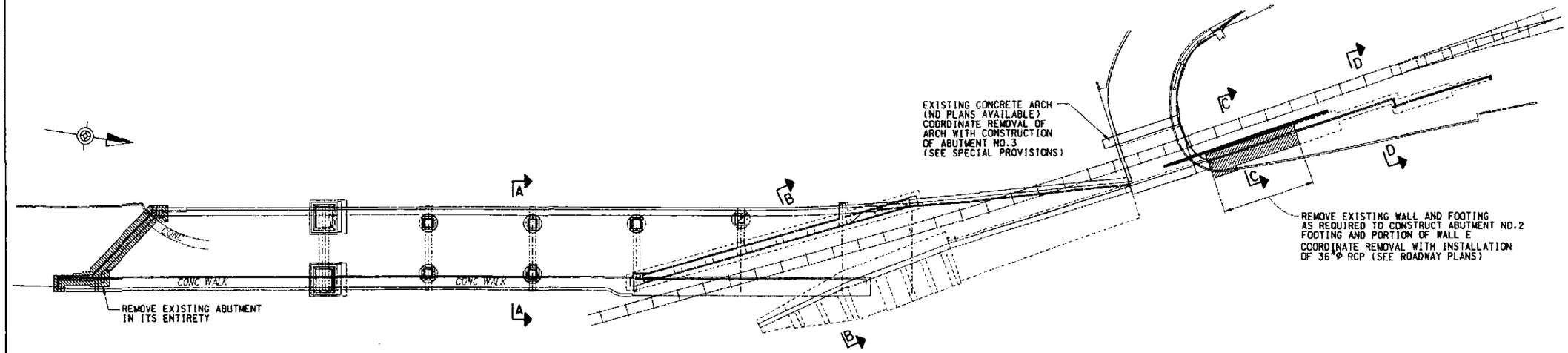

DEMOLITION PLAN

25' 0 25'

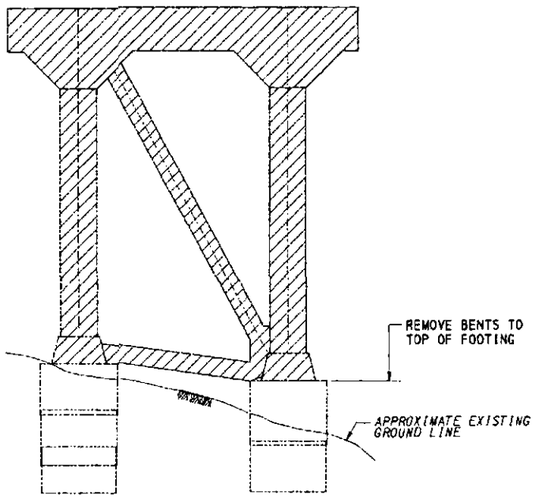

SECTION A-A

BENT D SHOWN
BENTS B,C,E,F & G SIMILAR

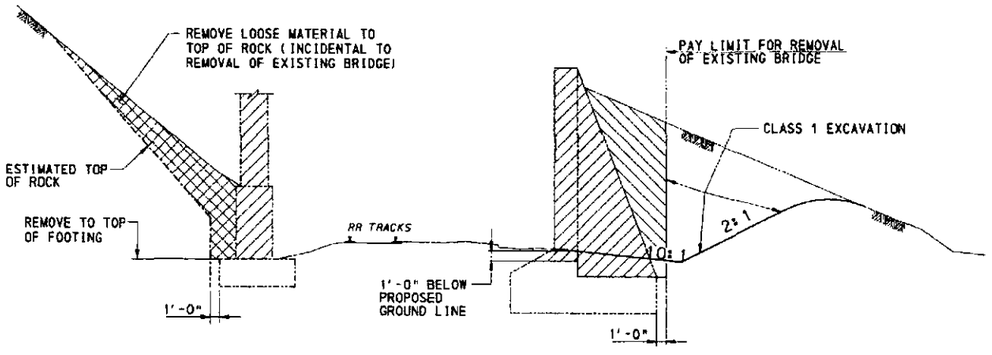

SECTION B-B

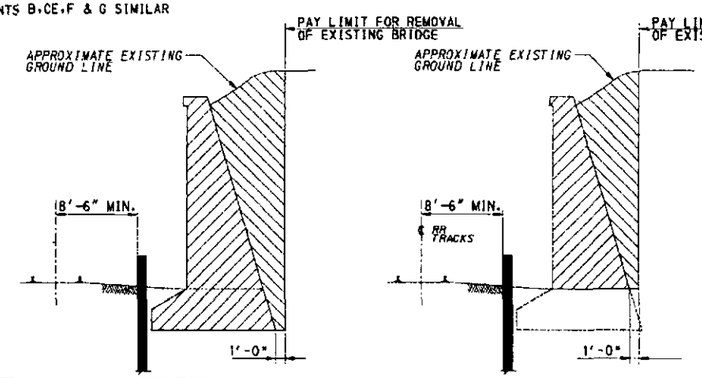

SECTION C-C

SECTION D-D

REFER TO ROADWAY CROSS SECTIONS AND WALL E DRAWINGS FOR ADDITIONAL INFORMATION

GENERAL NOTES (CON'T.)

FOUNDATIONS:

- TOP OF ROCK ELEVATIONS TO BE FIELD VERIFIED BY THE DISTRICT GEOTECHNICAL ENGINEER.
- COMPLETE WINE VOID GROUTING IN ACCORDANCE WITH THE SPECIAL PROVISIONS BEFORE BEGINNING CONSTRUCTION OF WALL A FOUNDATION.
- USE SELF CONSOLIDATING CONCRETE (SCC) FOR ALL DRILLED SHAFTS (SEE SPECIAL PROVISIONS)

Mark	Description	By	Chk'd.	Recm'd.	Date
REVISIONS					

DEMOLITION NOTES

- REFER TO SPECIAL PROVISION "ITEM 5018-0101 REMOVAL OF EXISTING BRIDGE" FOR ADDITIONAL REQUIREMENTS.
- EXISTING STRUCTURE SHOWN IS A GENERAL ARRANGEMENT OF SUBSTRUCTURE UNITS BASED ON INFORMATION FROM EXISTING BRIDGE PLANS. SEE GENERAL NOTE REGARDING REFERENCE DRAWINGS.

8' 4' 0' 8'
UNLESS NOTED

LEGEND

- CONCRETE REMOVAL LIMITS
- LOOSE MATERIAL REMOVAL LIMITS
- TEMPORARY EXCAVATION AND SUPPORT SYSTEM
- EXCAVATION INCLUDED WITH REMOVAL OF EXISTING BRIDGE

DESIGNED BY	
DRAWN BY	
CHECKED BY	

KEITH A. MICHAEL
ENGINEER

COMMONWEALTH OF PENNSYLVANIA
DEPARTMENT OF TRANSPORTATION

ARMSTRONG COUNTY
SR 1038 SECTION 150
SEG 0040 OFFSET 1110
SR 1038-150 STA 1956+35.83 AND SR 4025 OVER
BUFFALO AND PITTSBURGH RAILROAD
4 SPAN STEEL MULTI-GIRDER BRIDGE AND
SINGLE SPAN ROLLED BEAM T-SPAN
GENERAL NOTES AND DEMOLITION PLAN

RECOMMENDED JUL 6 2007

SHEET 6 OF 97

S-27038

A-00122496

H:\Projects\40432\Retrofit\Lanes_PTF\planning\final\general02.dgn 7/17/2007

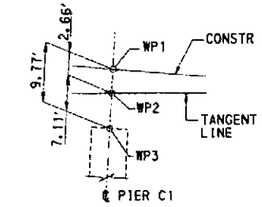

DETAIL C1
NO SCALE

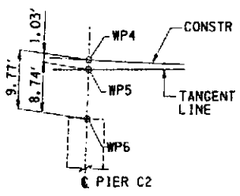

DETAIL C2
NO SCALE

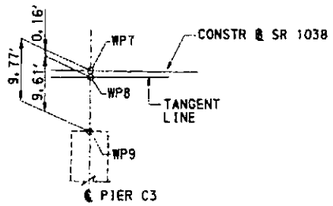

DETAIL C3
NO SCALE

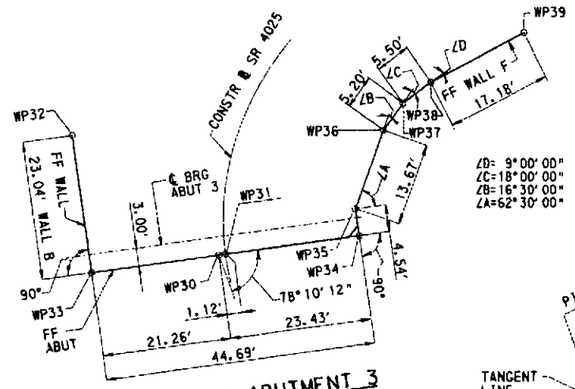

DETAIL A ABUTMENT 3
NO SCALE

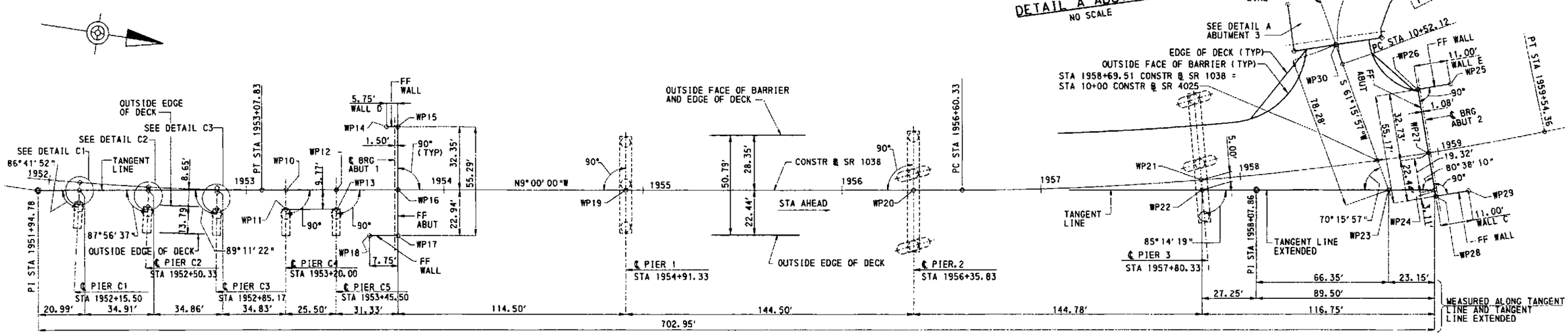

STAKE-OUT PLAN
NO SCALE

NOTE:
STATIONS AND OFFSETS WP1 THRU WP29 FROM CONSTR ℄ SR 1038
STATIONS AND OFFSETS WP30 THRU WP40 FROM CONSTR ℄ SR 4025

WORK POINT STATIONS AND COORDINATES

WP NO.	STATION	OFFSET	NORTH	EAST	WP NO.	STATION	OFFSET	NORTH	EAST
WP1	STA 1952+15.50	0	9069.5073	10217.1736	WP21	STA 1957+80.33	0	9626.8330	10126.5500
WP2	STA 1952+15.50	2.66' RIGHT	9069.7718	10219.8250	WP22	STA 1957+80.33	5.00' RIGHT	9628.0225	10131.4068
WP3	STA 1952+15.50	9.77' RIGHT	9070.4773	10226.8961	WP23	STA 1958+72.67	15.75' RIGHT	9720.4728	10116.7641
WP4	STA 1952+50.33	0	9104.1281	10213.3388	WP24	STA 1958+95.26	19.32' RIGHT	9743.3341	10113.1432
WP5	STA 1952+50.33	1.03' RIGHT	9104.2530	10214.3637	WP25	STA 1959+06.48	32.69' LEFT	9737.3745	10060.2757
WP6	STA 1952+50.33	9.77' RIGHT	9105.3093	10223.0380	WP26	STA 1958+95.22	32.73' LEFT	9726.9347	10063.7413
WP7	STA 1952+85.17	0	9138.6576	10208.7522	WP27	STA 1958+95.25	0	9737.2461	10094.8037
WP8	STA 1952+85.17	0.16' RIGHT	9138.6804	10208.9109	WP28	STA 1958+95.26	22.44' RIGHT	9744.3151	10116.0986
WP9	STA 1952+85.17	9.77' RIGHT	9140.0494	10218.4234	WP29	STA 1959+06.09	22.47' RIGHT	9754.7550	10112.6330
WP10	STA 1953+20.00	0	9173.0863	10203.4616	WP30	STA 10+62.05	1.12' LEFT	9682.8392	10048.1221
WP11	STA 1953+20.00	9.77' RIGHT	9174.6148	10213.1121	WP31	STA 10+62.06	0	9683.9098	10047.7967
WP12	STA 1953+45.50	0	9198.2724	10199.4725	WP32	STA 10+76.63	26.42' LEFT	9655.7975	10032.2579
WP13	STA 1953+45.50	9.77' RIGHT	9199.8009	10209.1230	WP33	STA 10+61.85	22.38' LEFT	9662.4974	10054.3040
WP14	STA 1953+71.08	32.35' LEFT	9218.4762	10163.5150	WP34	STA 10+62.71	22.30' RIGHT	9705.2541	10041.3102
WP15	STA 1953+76.83	32.35' LEFT	9224.1554	10162.6155	WP35	STA 10+71.54	21.72' RIGHT	9703.9335	10036.9647
WP16	STA 1953+76.83	0	9229.2167	10194.5714	WP36	STA 10+98.02	21.16' RIGHT	9706.4470	10023.5282
WP17	STA 1953+76.83	22.94' RIGHT	9232.8049	10217.2265	WP37	STA 11+07.57	20.37' RIGHT	9708.8140	10018.9020
WP18	STA 1953+69.08	22.94' RIGHT	9225.1503	10218.4389	WP38	STA 11+17.30	20.07' RIGHT	9712.7040	10015.0250
WP19	STA 1954+91.33	0	9342.3070	10176.6597	WP39	STA 11+34.48	20.14' RIGHT	9726.6128	10004.9552
WP20	STA 1956+35.83	0	9485.0280	10154.0549					

LEGEND

WP DENOTES WORK POINT
FF DENOTES FRONT FACE

Mark	Description	By	Chk'd.	Recm'd.	Date
REVISIONS					

DESIGNED BY	KAM
DRAWN BY	RLG
CHECKED BY	

COMMONWEALTH OF PENNSYLVANIA
DEPARTMENT OF TRANSPORTATION

ARMSTRONG COUNTY
SR 1038 SECTION 150
SEG 0040 OFFSET 1110
SR 1038-150 STA 1956+35.83 AND SR 4025 OVER
BUFFALO AND PITTSBURGH RAILROAD
4 SPAN STEEL MULTI-GIRDER BRIDGE AND
SINGLE SPAN ROLLED BEAM T-SPAN
STAKE-OUT PLAN

A-00122496

KEITH A. MICHAEL
PROFESSIONAL ENGINEER
COMMONWEALTH OF PENNSYLVANIA

RECOMMENDED JUL 06 2007

SHEET 7 OF 97

S-27038

H:\PW\PS\acts\043248*\DGN\Z-SW_STAKEOUT_PLAN.dgn 7/10/2007

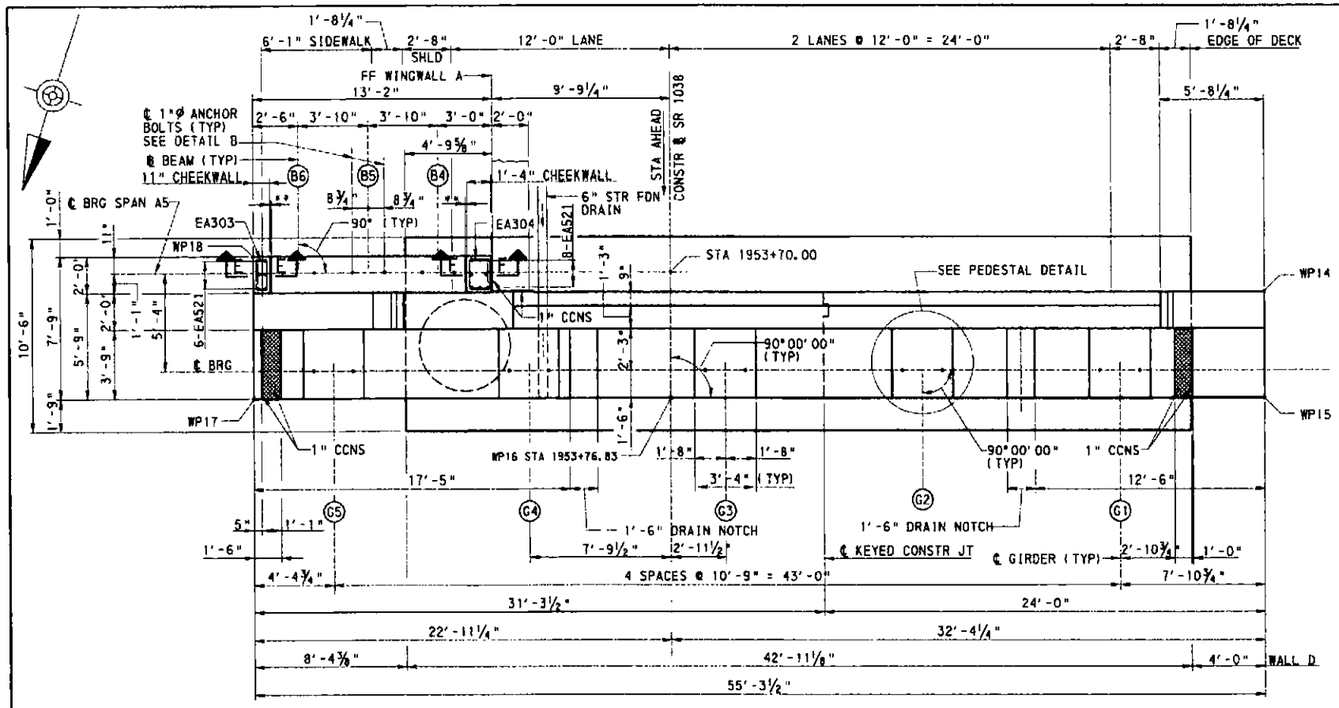

PLAN

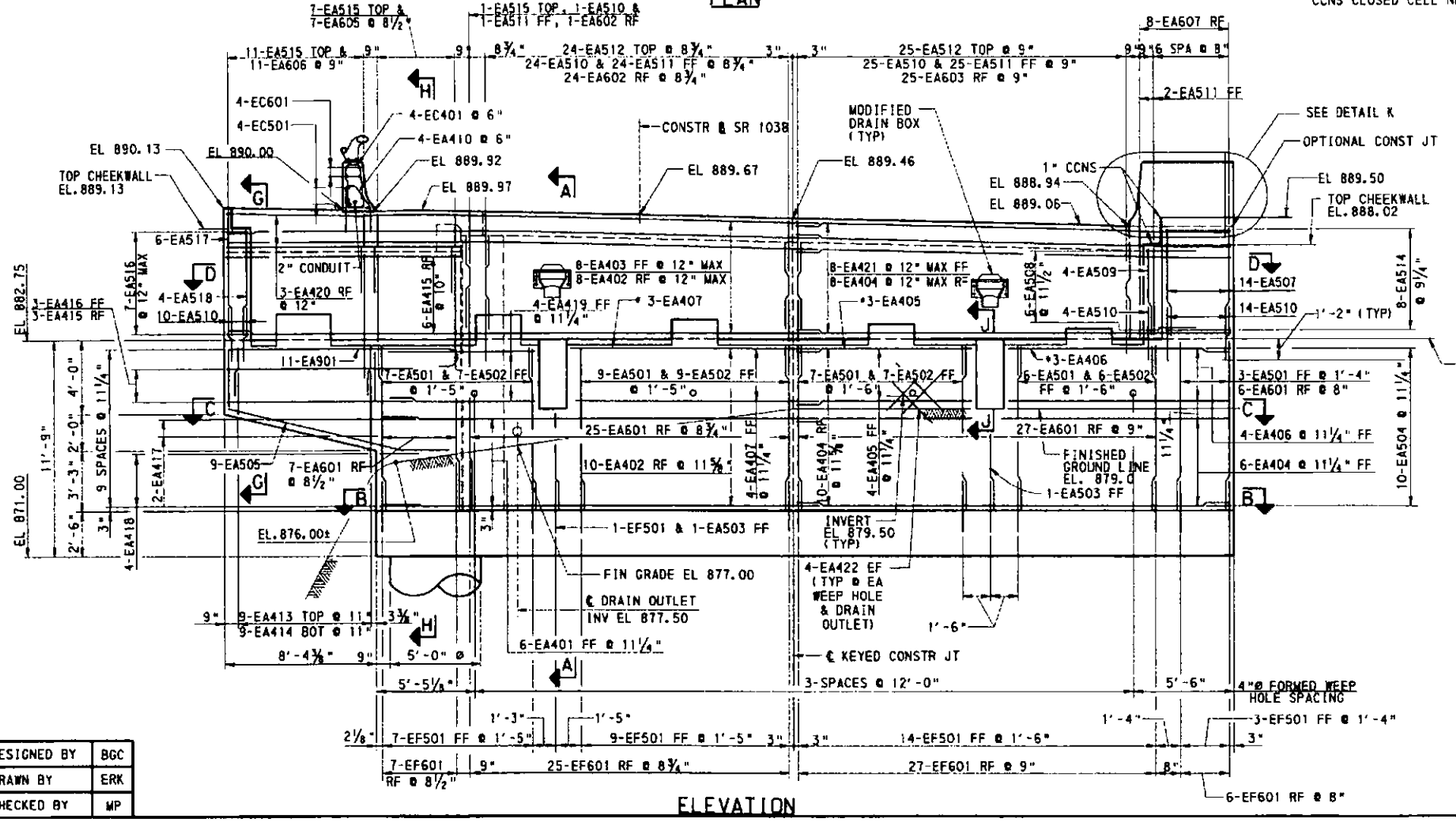

ELEVATION

TOP PEDESTAL ELEVATIONS	
GIRDER No.	ELEVATION
G1	882.88
G2	883.15
G3	883.56
G4	883.82
G5	884.00

NOTES:

- FOR STAKE OUT PLAN SEE SHEET 7.
- FOR BEARING DETAILS SEE SHEETS 35 AND 57 THRU 62.
- FOR SECTIONS B-B THRU F-F, J-J AND PEDESTAL DETAIL SEE SHEET 10.
- FOR FOOTING PLAN, CAISSON DETAILS, SECTIONS G-G & H-H AND DETAIL K SEE SHEET 9
- FOR LOCATION OF DRAIN BOX, TOOTH EXPANSION DAM DETAILS, AND MODIFIED DRAIN BOX DETAIL SEE SHEETS 76 AND 77.
- FOR KEYED CONST JT DETAILS SEE STANDARD DRAWING BC-735M
- FOR ADDITIONAL WATERPROOFING DETAILS SEE STANDARD DRAWING BC-788M

LEGEND:

FF FRONT FACE
RF REAR FACE
EF EACH FACE
▬ ALTERNATE 90° AND 135° HOOKS IN ALTERNATE TIES
* SEE SECTION A-A FOR LOCATION
** SEE STANDARD DRAWING BC-788M FOR WATERPROOFING DETAILS
CCNS CLOSED CELL NEOPRENE SPONGE

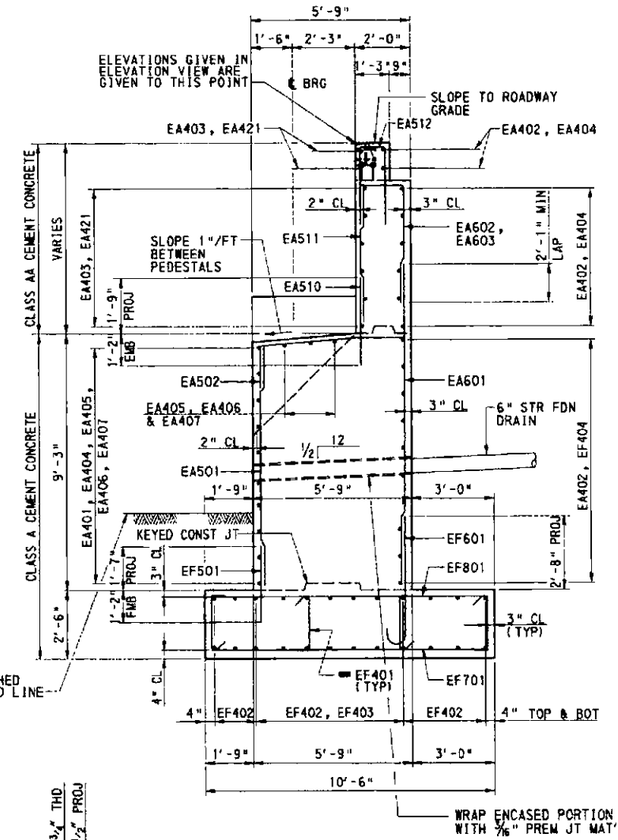

SECTION A-A

3' 2' 1' 0' 3'

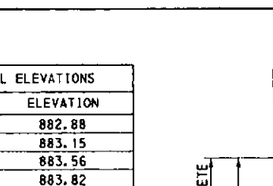

DETAIL B
ANCHOR BOLT DETAIL
NTS

MAXIMUM FACTORED BEARING PRESSURE = 4.13 TSF
MAXIMUM BEARING RESISTANCE = 7.15 TSF

Mark	Description	By	Chk'd.	Recm'd.	Date
REVISIONS					

4' 2' 0' 4'
UNLESS NOTED

DESIGNED BY	BGC
DRAWN BY	ERK
CHECKED BY	MP

COMMONWEALTH OF PENNSYLVANIA
DEPARTMENT OF TRANSPORTATION

ARMSTRONG COUNTY
SR 1038 SECTION 150

SEG 0040 OFFSET 1110
SR 1038-150 STA 1956+35.83 AND SR 4025 OVER BUFFALO AND PITTSBURGH RAILROAD
4 SPAN STEEL MULTI-GIRDER BRIDGE AND SINGLE SPAN ROLLED BEAM T-SPAN

ABUTMENT 1 PLAN AND ELEVATION

RECOMMENDED _____ JUL 6 2022

SHEET 8 OF 97

S-27038

A-00122496

7/27/2001

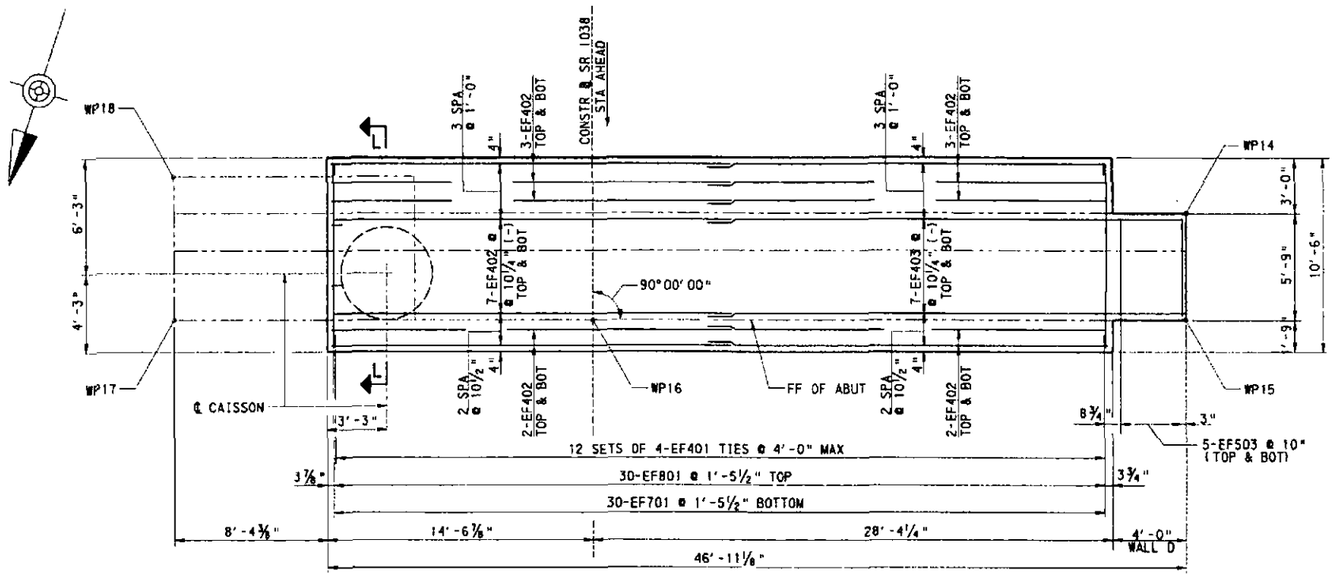

FOOTING PLAN

4' 2' 0' 4'

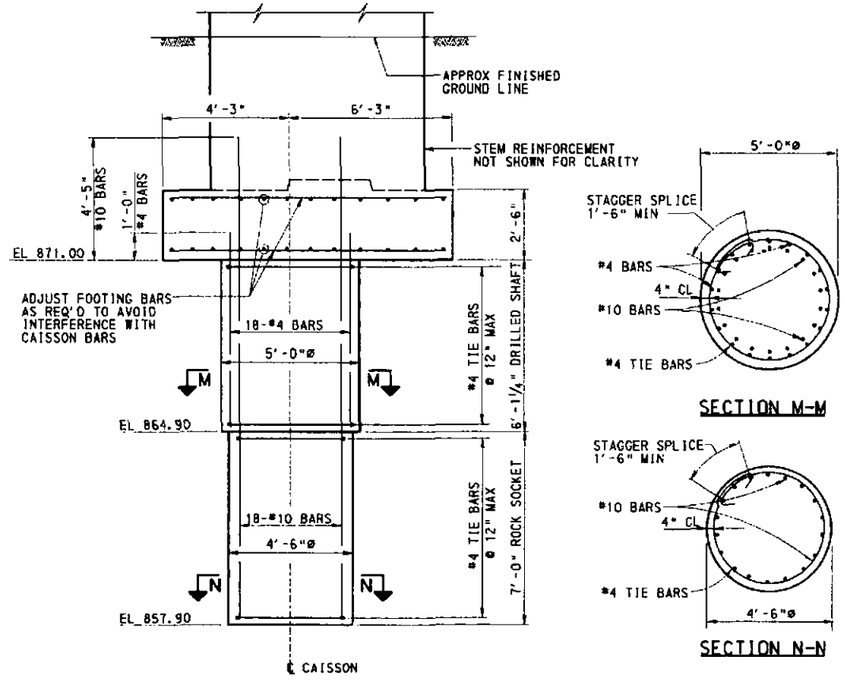

SECTION L-L

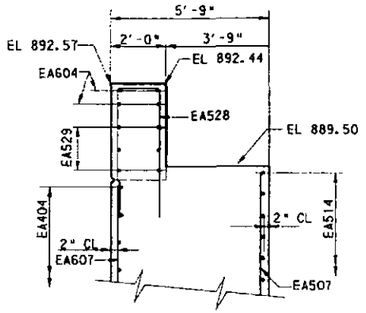

SECTION R-R

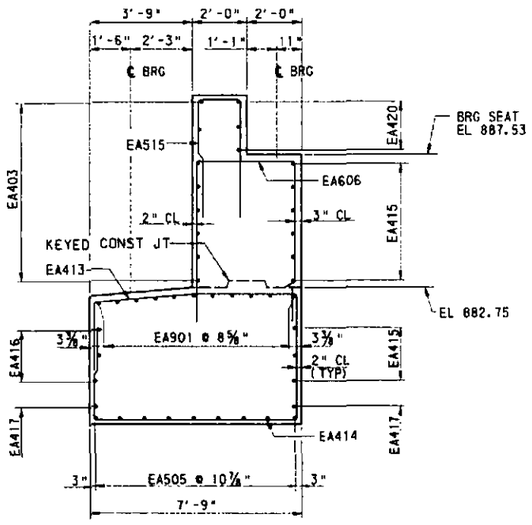

SECTION G-G

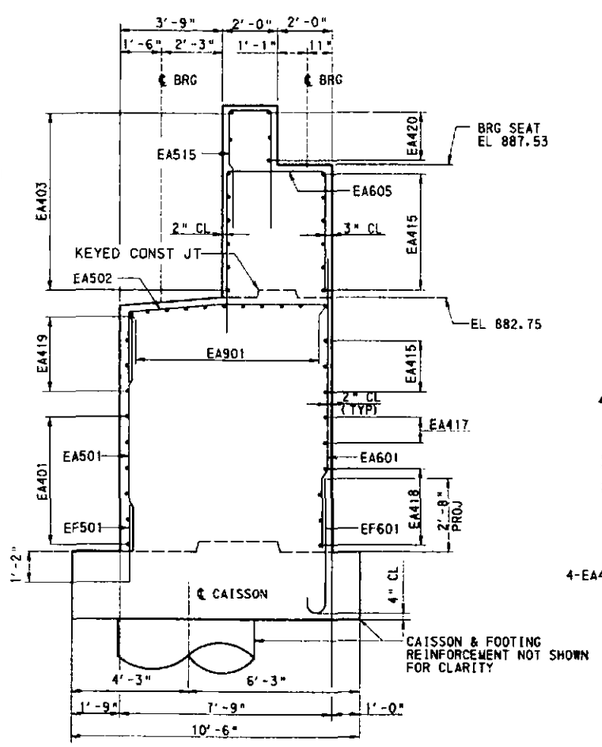

SECTION H-H

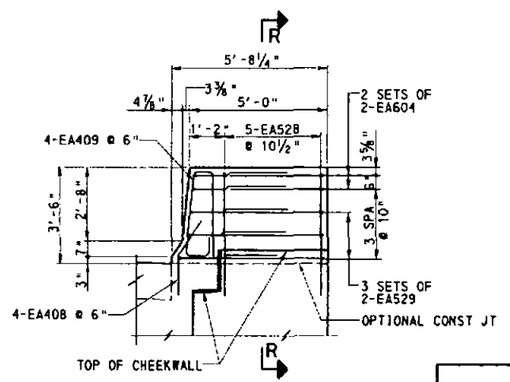

DETAIL K

3' 2' 1' 0' 3'

UNLESS NOTED

NOTE

- ALL REINFORCEMENT IN CAISSONS AND ROCK SOCKETS IS EPOXY COATED AND IS INCIDENTAL TO EACH.
- FOR GENERAL NOTES SEE SHEETS 5 AND 6.
- FOR STAKE OUT PLAN SEE SHEET 7.
- FOR ABUTMENT STEM DETAILS, AND LOCATION OF SECTIONS G-G & H-H AND DETAIL K SEE SHEET 8.
- FOR REINFORCEMENT BAR SCHEDULE SEE SHEET 81.
- CAISSON LOADS:
  MAXIMUM FACTORED AXIAL LOAD = 428 TONS (STR-1)
  MAXIMUM FACTORED AXIAL RESISTANCE = 532 TONS

Mark	Description	By	Chk'd.	Recm'd.	Date
REVISIONS					

DESIGNED BY	BGC
DRAWN BY	ERK
CHECKED BY	MP

COMMONWEALTH OF PENNSYLVANIA
DEPARTMENT OF TRANSPORTATION

ARMSTRONG COUNTY
SR 1038 SECTION 150
SEG 0040 OFFSET 1110
SR 1038-150 STA 1956+35.83 AND SR 4025 OVER
BUFFALO AND PITTSBURGH RAILROAD
4 SPAN STEEL MULTI-GIRDER BRIDGE AND
SINGLE SPAN ROLLED BEAM T-SPAN
ABUTMENT 1 FOOTING PLAN

KEITH A. MICHAEL — PROFESSIONAL ENGINEER — COMMONWEALTH OF PENNSYLVANIA

RECOMMENDED _____ JUL 5 2007

SHEET 9 OF 97

S-27038

A-00122496

\\Harrprojects\d432\pstructures_K\Finaldgn\finalabut1fig.dgn 7/5/2007

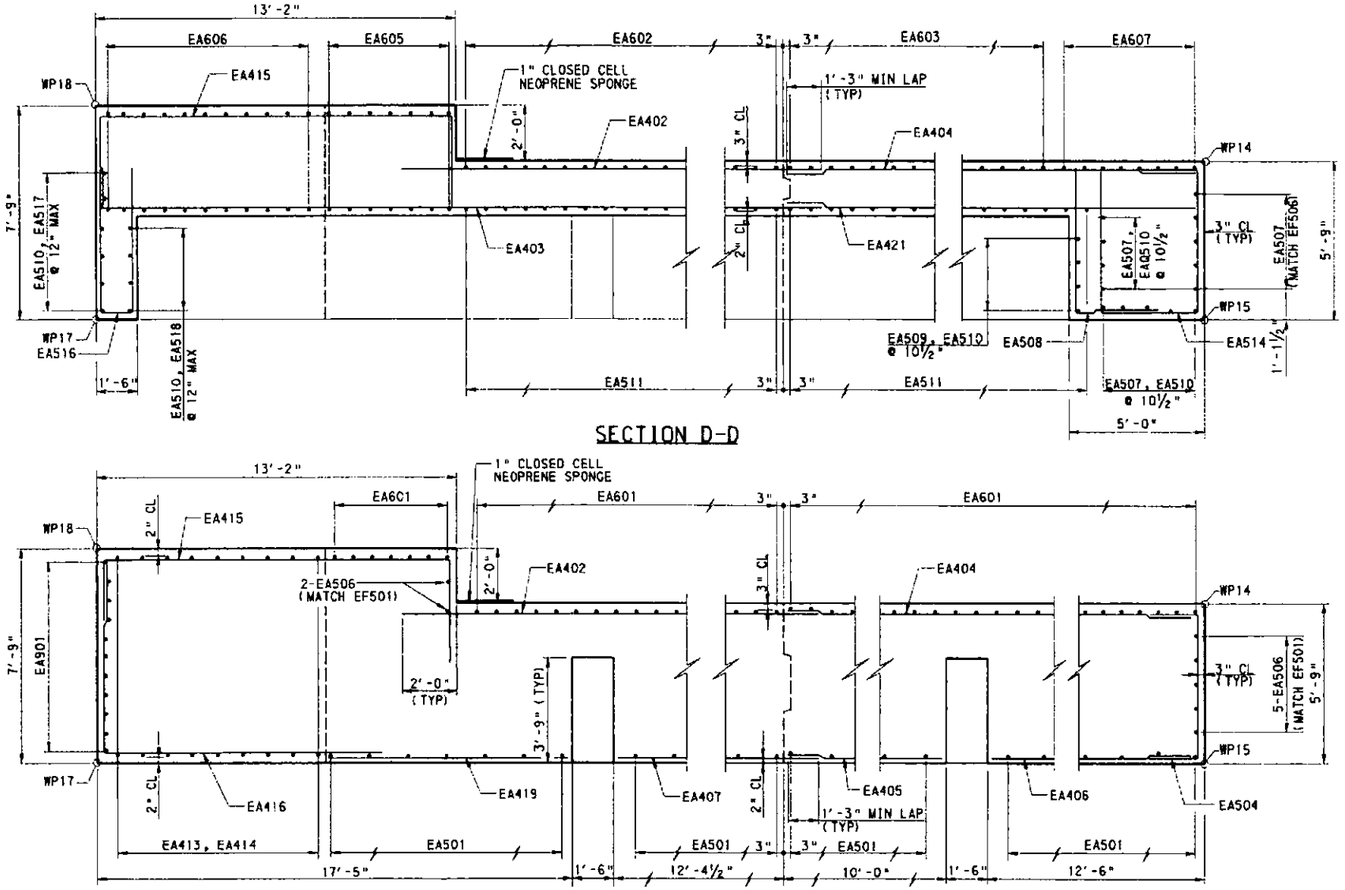

SECTION D-D

SECTION C-C

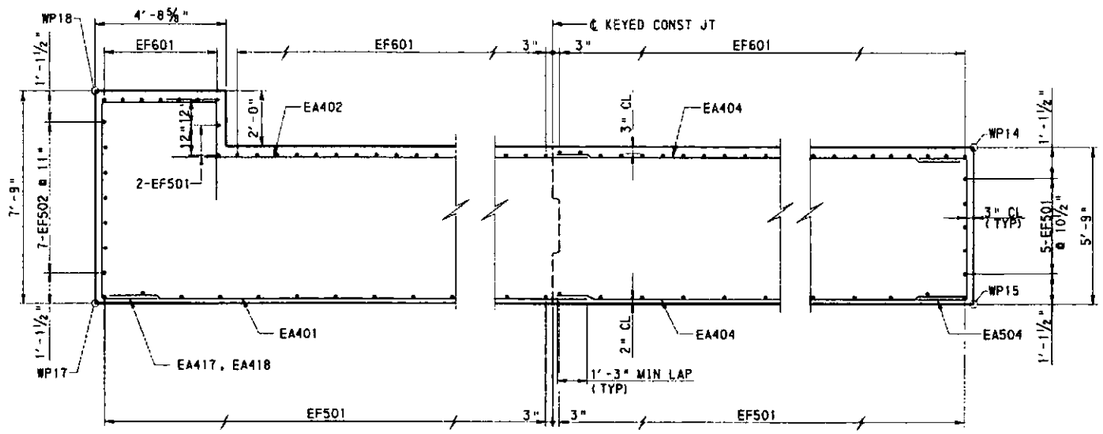

SECTION B-B

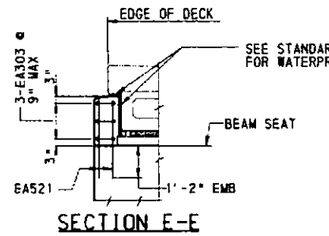

SECTION E-E

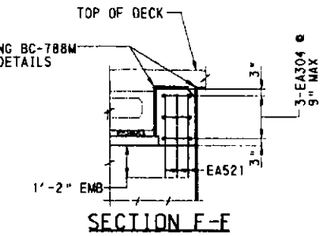

SECTION F-F

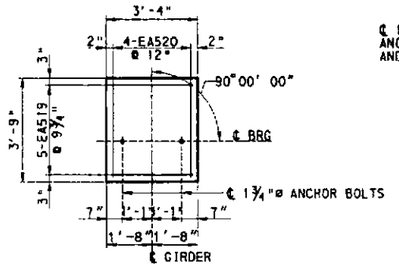

PEDESTAL DETAIL
NTS

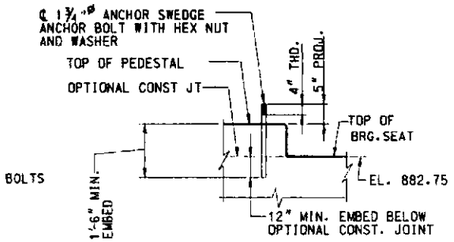

ANCHOR BOLT DETAIL
NTS

NOTE

PEDESTAL REINFORCEMENT SHOWN APPLIES TO PEDESTALS AT GIRDERS G2 THRU G5 ONLY. NO REINFORCEMENT REQUIRED FOR PEDESTAL AT GIRDER G1.

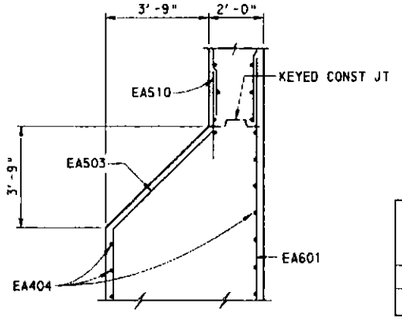

SECTION J-J
(TYPICAL DRAIN NOTCH DETAIL)

NOTE

FOR LOCATION OF SECTIONS, ADDITIONAL NOTES AND LEGEND SEE SHEET 8.

Mark	Description	By	Chk'd.	Recm'd.	Date
REVISIONS					

3' 2' 1' 0' 3'
UNLESS NOTED

COMMONWEALTH OF PENNSYLVANIA
DEPARTMENT OF TRANSPORTATION

ARMSTRONG COUNTY
SR 1038 SECTION 150

SEG 0040 OFFSET 1110
SR 1038-150 STA 1956+35.83 AND SR 4025 OVER BUFFALO AND PITTSBURGH RAILROAD
4 SPAN STEEL MULTI-GIRDER BRIDGE AND SINGLE SPAN ROLLED BEAM T-SPAN ABUTMENT 1 SECTIONS

DESIGNED BY	BGC
DRAWN BY	ERK
CHECKED BY	MP

COMMONWEALTH OF PENNSYLVANIA PROFESSIONAL KEITH A. MICHAEL ENGINEER

RECOMMENDED _____

SHEET 10 OF 97

S-27038

A-00122496

h:\projects\040432\structures\...\final\...\abut1.mcfa.dgn 7/3/2007

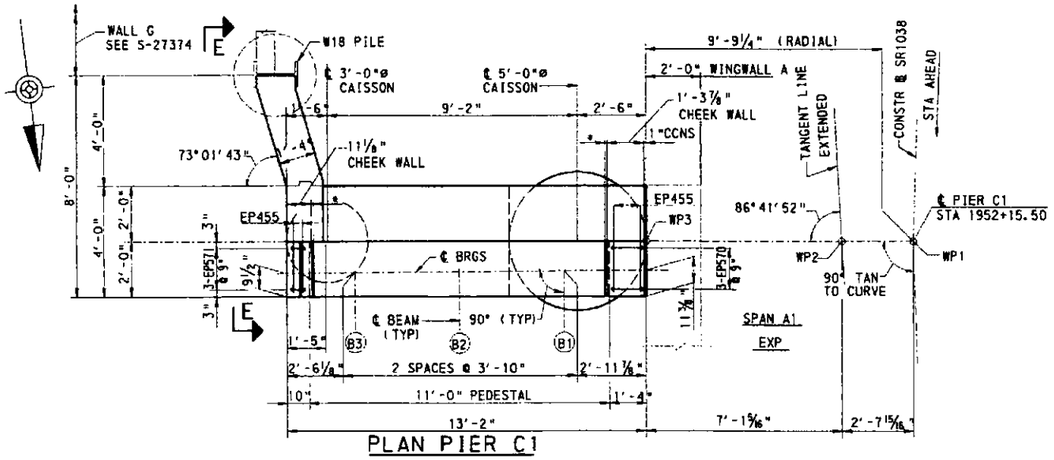

PLAN PIER C1

3' 0' 1' 2' 3'

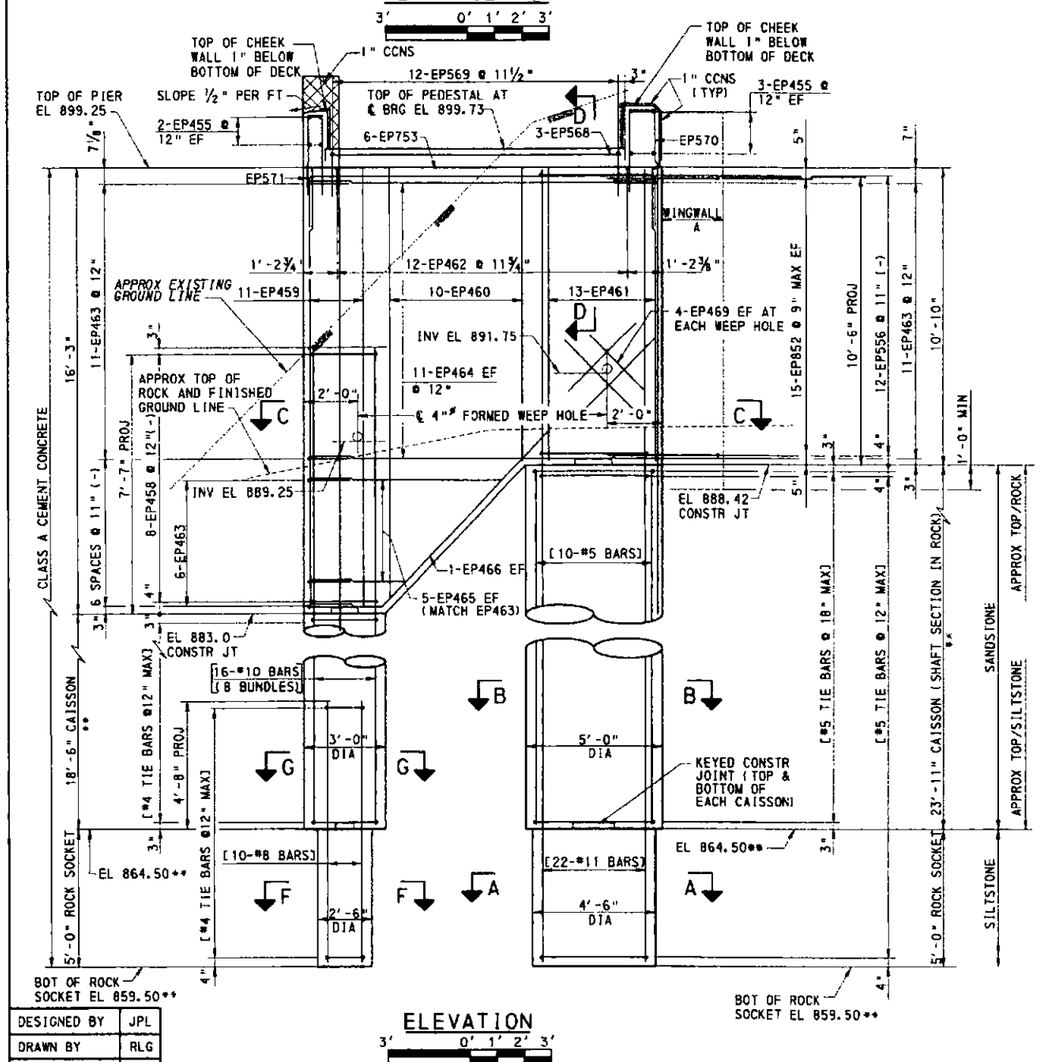

ELEVATION

3' 0' 1' 2' 3'

DESIGNED BY	JPL
DRAWN BY	RLG
CHECKED BY	MP

LEGEND:

EF EACH FACE
FF FRONT FACE
RF REAR FACE
WP WORK POINT
B1 BEAM NUMBER
CCNS CLOSED CELL NEOPRENE SPONGE
* SEE STANDARD DRAWING BC-788M FOR WATERPROOFING DETAILS

(**) NOTES:

- BOTTOM OF WINGWALL A TO BE 1'-0" MINIMUM BELOW TOP OF ROCK ELEVATION AS DETERMINED BY THE GEOTECHNICAL ENGINEER BASED ON DRILLING FOR CONSTRUCTION OF PIER SHAFT. TOP OF ROCK ELEVATIONS SHOWN ARE APPROXIMATE AND ARE BASED ON BEST AVAILABLE DATA AT TIME OF DESIGN.
- BOTTOM OF SHAFT SECTION IN ROCK/TOP OF ROCK SOCKET TO BE AT TOP OF SILTSTONE STRATUM AS DETERMINED BY THE GEOTECHNICAL ENGINEER BASED ON DRILLING FOR CONSTRUCTION OF PIER SHAFT. MINIMUM ROCK SOCKET DEPTH TO BE 5'-0" OR 10'-0" AS PER CONTRACT DRAWINGS. ADJUST LENGTH OF VERTICAL REINFORCING BARS AND NUMBER OF TIES IN THE SHAFT SECTION IN ROCK AS REQUIRED BASED ON ACTUAL T.O.R. ELEVATION AND TOP OF SILSTONE ELEVATION.
- DO NOT BEGIN CONTRUCTION OF WINGWALL A UNTIL DIRECTED BY THE DISTRICT GEOTECHNICAL ENGINEER.

[ ] REINFORCEMENT BARS SHOWN IN BRACKETS ARE INCIDENTAL TO CAISSONS (SHAFT SECTION IN ROCK OR SOIL AND ROCK SOCKET) AS APPROPRIATE. (SEE SPECIAL PROVISIONS)

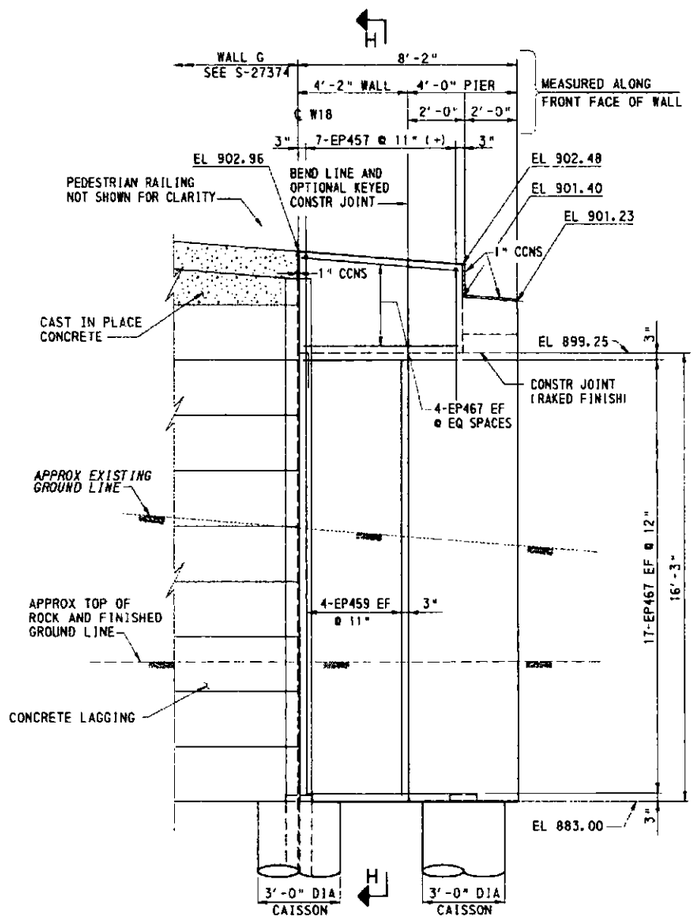

SECTION E-E

3' 0' 1' 2' 3'

NOTES:

- FOR GENERAL NOTES SEE SHEETS 5 AND 6.
- FOR STAKE-OUT PLAN SEE SHEET 7.
- FOR SECTIONS AA THRU DD AND FF THRU HH SEE SHEET 12.
- FOR BEARING DETAILS SEE SHEET 36
- FOR WINGWALL A DETAILS SEE SHEETS 15, 16, AND 17.
- FOR REINFORCEMENT BAR SCHEDULE SEE SHEET 82.
- FOR KEYED CONSTRUCTION JT. DETAIL SEE STANDARD DWG. BC-735M
- FOR TREATMENT OF WEEPHOLES SEE STANDARD DRAWING BC-735M.
- FOR ADDITIONAL DOWEL DETAILS SEE STANDARD DWG. BC-775M
- CAISSON LOADS:
  - MAXIMUM FACTORED AXIAL LOAD = 143 TONS (STR I)
  - MAXIMUM FACTORED AXIAL RESISTANCE = 380 TONS (5'-0" Ø CAISSON)
  - MAXIMUM FACTORED AXIAL RESISTANCE = 212 TONS (3'-0" Ø CAISSON)

Mark	Description	By	Chk'd.	Recm'd.	Date
REVISIONS					

COMMONWEALTH OF PENNSYLVANIA
DEPARTMENT OF TRANSPORTATION

ARMSTRONG COUNTY
SR 1038 SECTION 150
SEG 0040 OFFSET 1110
SR 1038-150 STA 1956+35.83 AND SR 4025 OVER BUFFALO AND PITTSBURGH RAILROAD
4 SPAN STEEL MULTI-GIRDER BRIDGE AND SINGLE SPAN ROLLED BEAM T-SPAN
PIER C1 DETAILS

KEITH A. MICHAEL

RECOMMENDED _____ 2022

SHEET 11 OF 97

S-27038

A-00122496

h:\projects\043246\structure\...\PierC1Details.dgn 7/27/2022

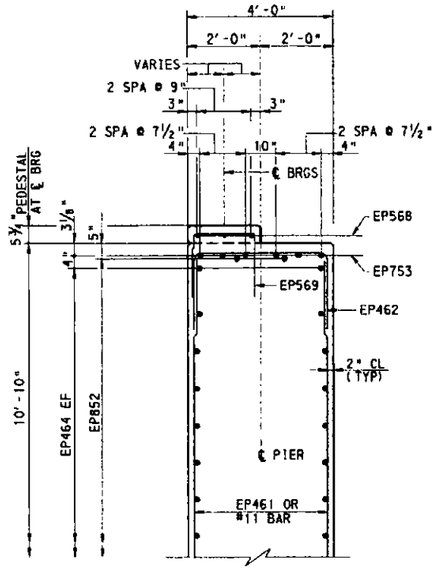

SECTION D-D

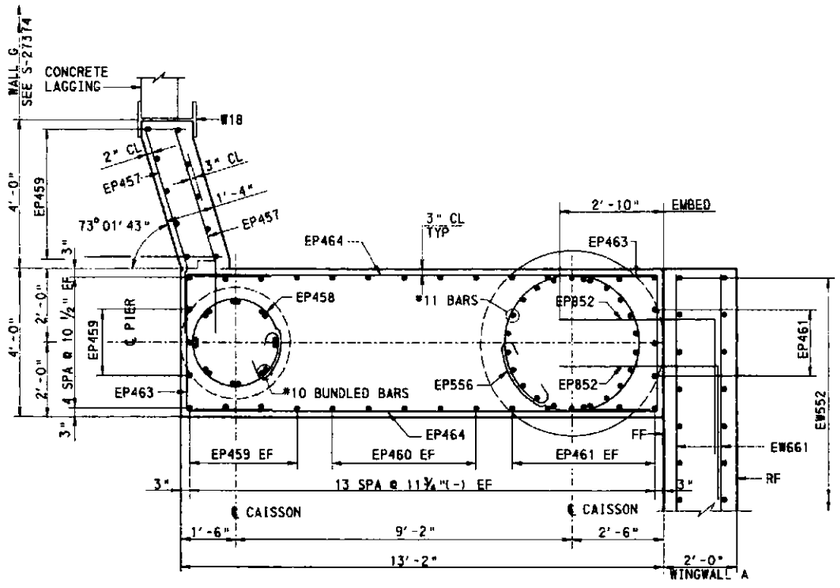

SECTION C-C

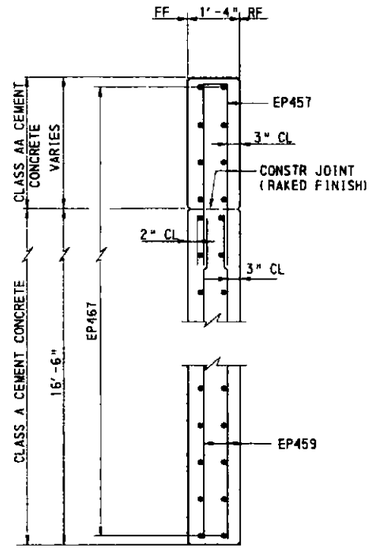

SECTION H-H

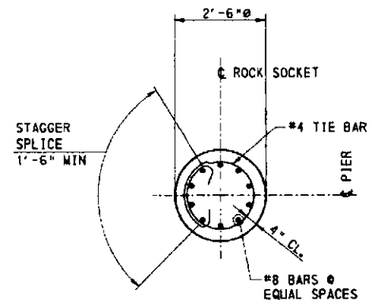

SECTION F-F

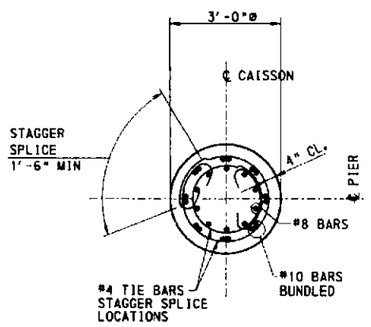

SECTION G-G

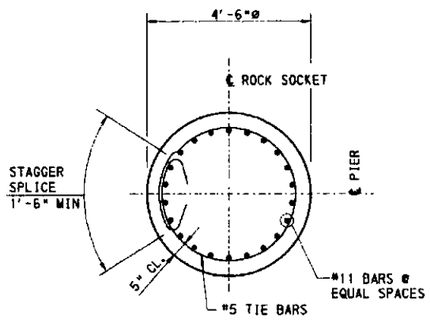

SECTION A-A

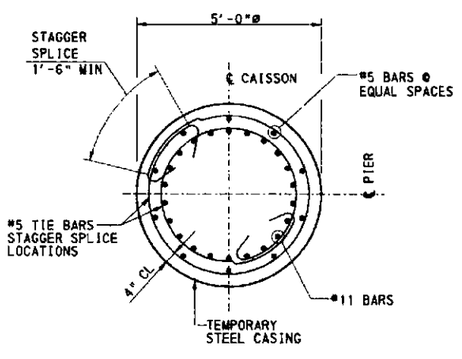

SECTION B-B

NOTES:

- FOR PIER PLAN AND ELEVATION, LOCATION OF SECTIONS, LEGEND AND ADDITIONAL NOTES SEE SHEET 11.

Mark	Description	By	Chk'd.	Recm'd.	Date
REVISIONS					

2' 1' 0' 2'

COMMONWEALTH OF PENNSYLVANIA
DEPARTMENT OF TRANSPORTATION

ARMSTRONG COUNTY
SR 1038 SECTION 150
SEG 0040 OFFSET 1110
SR 1038-150 STA 1956+35.83 AND SR 4025 OVER
BUFFALO AND PITTSBURGH RAILROAD
4 SPAN STEEL MULTI-GIRDER BRIDGE AND
SINGLE SPAN ROLLED BEAM T-SPAN
PIER C1 SECTIONS

RECOMMENDED JUL 6 2017

SHEET 12 OF 97

S-27038

DESIGNED BY	RES
DRAWN BY	RLG
CHECKED BY	MP

A-00122496

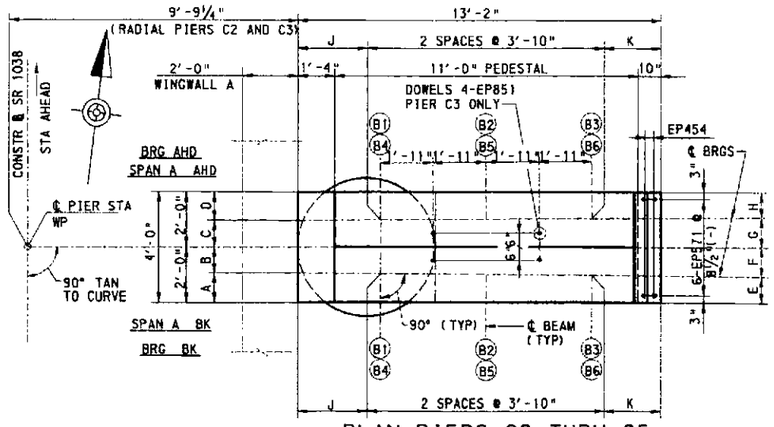

PLAN PIERS C2 THRU C5

3' 2' 1' 0' 3'

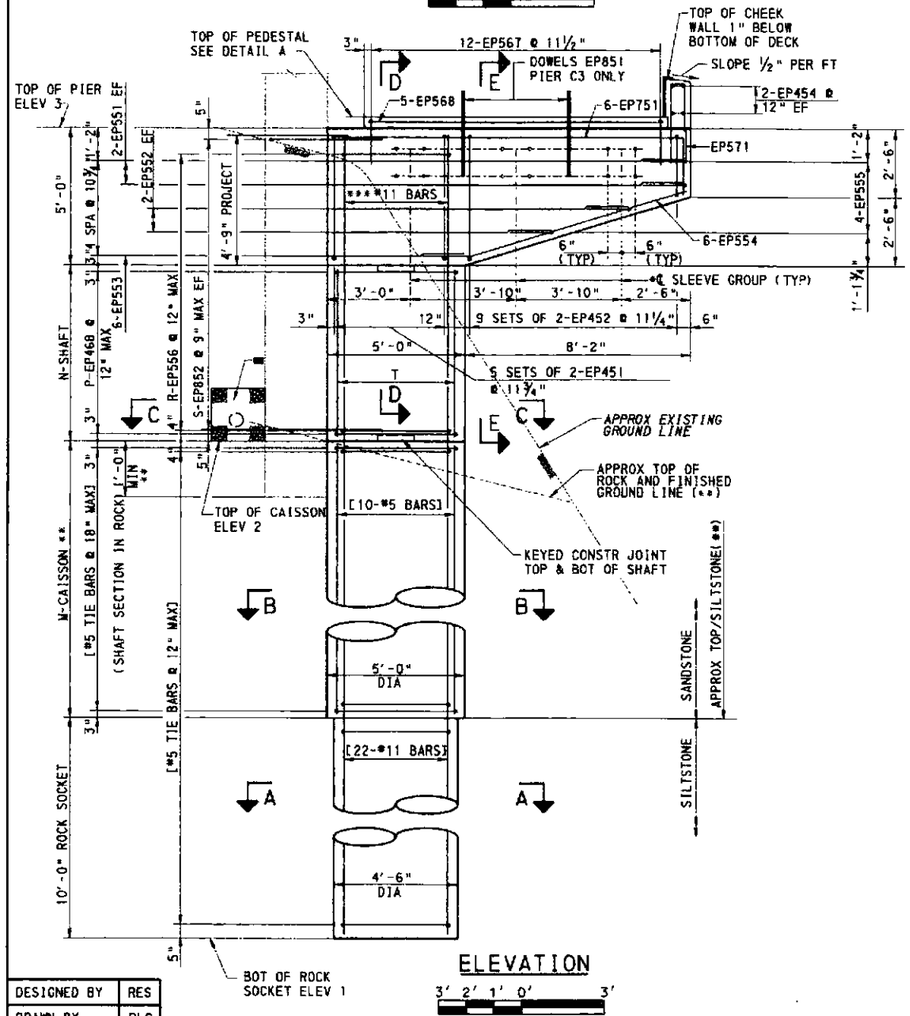

ELEVATION

3' 2' 1' 0' 3'

DESIGNED BY	RES
DRAWN BY	RLG
CHECKED BY	MP

PIER DETAILS

LOCATION	WP NO.	SPAN	BRG	ELEV 1	ELEV 2	ELEV 3	A	B	C	D	E	F	G	H	J	K	M (**)	N	P	R	S	T
℄ PIER C2	4	A1 BK	EXP	852.80	886.25	896.50	1'-0¼"	11¾"	11¾"	1'-0¼"	10½"	1'-1½"	1'-1½"	10½"	2'-11⅞"	2'-6⅛"	23'-5"±	5'-3"	6	11	14	12-EP563
STA 1952+50.33		A2 AHD	EXP																			
℄ PIER C3	7	A2 BK	FIX	853.90	883.75	894.00	11⅜"	1'-0⅝"	11⅝"	1'-0⅜"	9½"	1'-2½"	1'-1¼"	10¾"	2'-11⅞"	2'-6⅛"	19'-10"±	5'-3"	6	11	14	12-EP563
STA 1952+85.17		A3 AHD	FIX																			
℄ PIER C4	10	A3 BK	EXP	854.90	880.75	891.25	1'-0⅛"	11⅞"	1'-0"	1'-0"	11⅜"	1'-0⅝"	1'-0"	1'-0"	3'-0"	2'-6"	15'-10"±	5'-6"	6	11	14	12-EP564
STA 1953+20.00		A4 AHD	EXP																			
℄ PIER C5	12	A4 BK	EXP	854.90	876.25	889.25	1'-0"	1'-0"	1'-0"	1'-0"	1'-0"	1'-0"	1'-0"	1'-0"	3'-0"	2'-6"	13'-4"±	6'-0"	7	12	15	12-EP566
		A5 AHD	EXP																			

NOTE

DIMENSIONS A THRU H ARE MEASURED AT END OF PIER CAP ON EACH SIDE

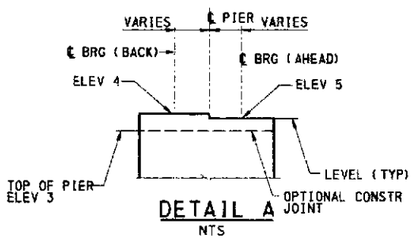

DETAIL A

NTS

TOP OF PEDESTAL ELEVATIONS		
LOCATION	ELEV 4	ELEV 5
PIER C2	897.12	896.96
PIER C3	894.44	894.28
PIER C4	891.75	891.59
PIER C5	889.71	889.55

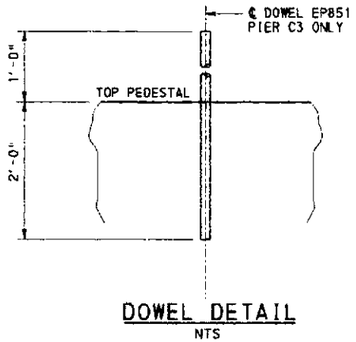

DOWEL DETAIL

NTS

LEGEND:

EF DENOTES EACH FACE

WP DENOTES WORK POINT

B1 DENOTES BEAM NUMBER

* PROVIDE 4-1½"ø NON-METALLIC SLEEVES FOR FUTURE JACKING THRU-BOLTS AT EACH BEAM (SEE SLEEVE NOTES)

** SEE NOTE ON SHEET 11

*** EXTEND ALTERNATING #11 BARS FROM CAISSON BELOW INTO SHAFT AND CAP

■ 6"ø STRUCTURE FOUNDATION DRAIN WITH CONTINUOUS 2'-0"x2'-0" OF NO.57 COARSE AGGREGATE ENCASED IN GEOTEXTILE, CLASS 1 (INCIDENTAL TO NO.57 COARSE AGGREGATE)

[ ] REINFORCEMENT BARS SHOWN IN BRACKETS ARE INCIDENTAL TO CAISSONS (SHAFT SECTION IN ROCK OR SOIL) AS APPROPRIATE. (SEE SPECIAL PROVISIONS)

NOTES:

- FOR GENERAL NOTES SEE SHEETS 5 AND 6.
- FOR ADDITIONAL WORK POINT LOCATIONS, DIMENSIONS AND DETAILS SEE STAKE-OUT PLAN SHEET 7.
- FOR SECTIONS AA THRU EE SEE SHEET 14.
- FOR BEARING DETAILS SEE SHEETS 35 AND 36.
- FOR WINGWALL A DETAILS SEE SHEETS 15, 16, AND 17.
- FOR REINFORCEMENT BAR SCHEDULE SEE SHEET 82.
- FOR KEYED CONSTRUCTION JT. DETAIL SEE STANDARD DWG. BC-735M
- FOR ADDITIONAL DOWEL DETAILS SEE STANDARD DWG. BC-775M
- FOR WATERPROOFING DETAILS AT CLOSURE WALL SEE STANDARD DRAWING BC-788M
- CAISSON LOADS:
  - MAXIMUM FACTORED AXIAL LOAD = 90 TONS (STR I)
  - MAXIMUM FACTORED AXIAL RESISTANCE = 760 TONS

SLEEVES NOTES:

- PLACE SLEEVES LEVEL.
- PLACE SLEEVES TO CLEAR REINFORCEMENT. DO NOT CUT REINFORCEMENT
- INSTALLTHREADED PLUGS AT EACH END OF SLEEVE
- SLEEVES ARE INCIDENTAL TO CLASS A CEMENT CONCRETE

Mark	Description	By	Chk'd.	Reom'd.	Date
REVISIONS					

COMMONWEALTH OF PENNSYLVANIA
DEPARTMENT OF TRANSPORTATION

ARMSTRONG COUNTY
SR 1038 SECTION 150
SEG 0040 OFFSET 1110
SR 1038-150 STA 1956+35.83 AND SR 4025 OVER
BUFFALO AND PITTSBURGH RAILROAD
4 SPAN STEEL MULTI-GIRDER BRIDGE AND
SINGLE SPAN ROLLED BEAM T-SPAN
PIERS C2 THRU C5 DETAILS

COMMONWEALTH OF PENNSYLVANIA REGISTERED PROFESSIONAL KEITH A. MICHNEL ENGINEER

RECOMMENDED JUL 6 2007

SHEET 13 OF 97

S-27038

A-00122496

T:\Projects\0352\structure\Plans\Beam\pier2.dgn 7/3/2007

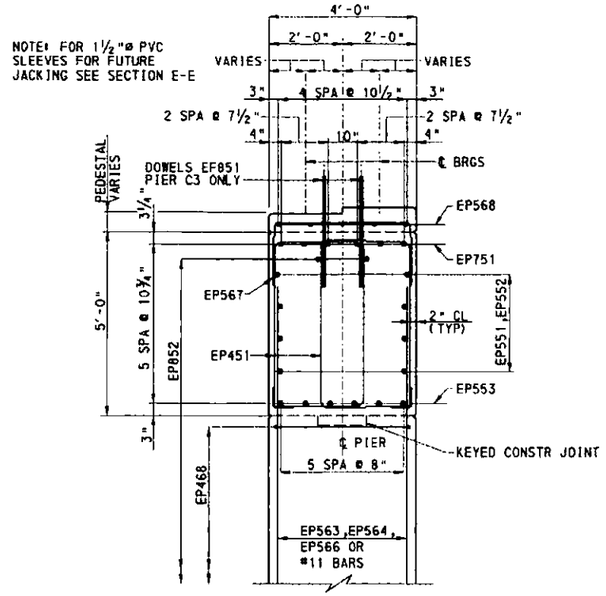

SECTION D-D

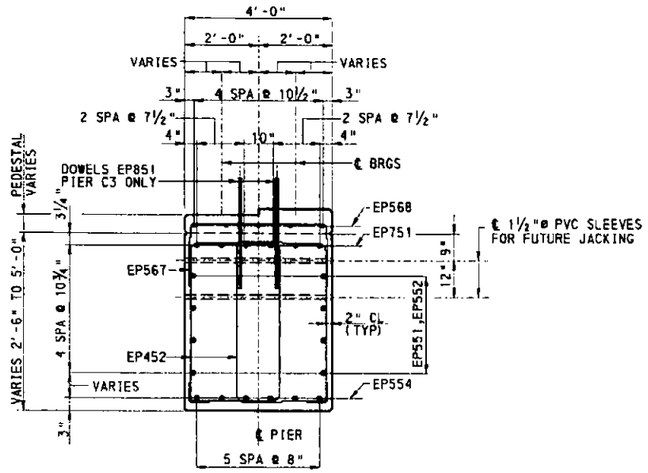

SECTION E-E

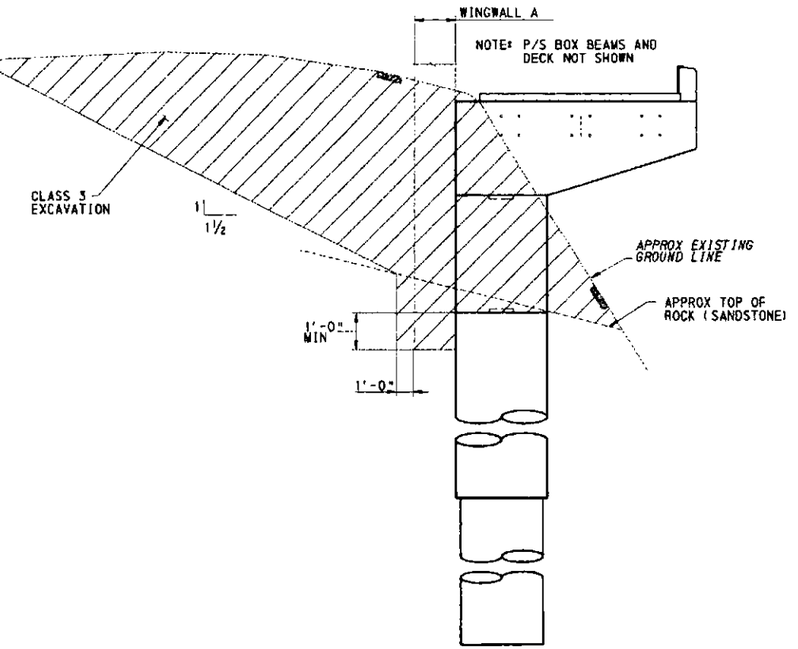

EXCAVATION PAYMENT LIMITS
NTS
(TYPICAL WINGWALL A AND PIERS C1 THRU C5)

NOTES:

- FOR PIER PLAN AND ELEVATION, LOCATION OF SECTIONS AND ADDITIONAL NOTES SEE SHEET 13.
- *** EXTEND ALTERNATING #11 BARS FROM CAISSON BELOW INTO SHAFT AND CAP, SEE PIER ELEVATION

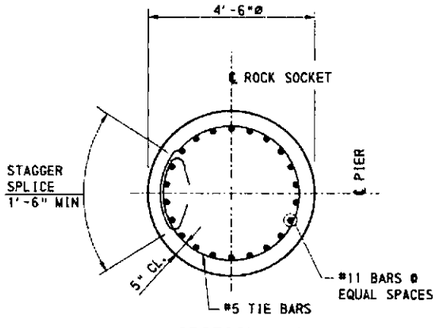

SECTION A-A

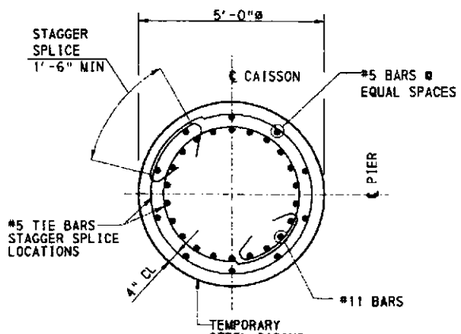

SECTION B-B

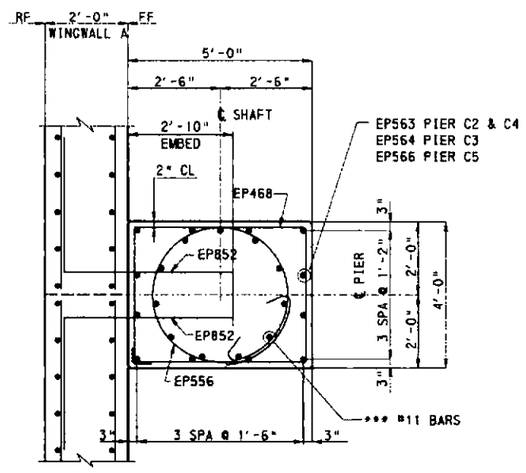

SECTION C-C

Mark	Description	By	Chk'd.	Recm'd.	Date
REVISIONS					

COMMONWEALTH OF PENNSYLVANIA
DEPARTMENT OF TRANSPORTATION

ARMSTRONG COUNTY
SR 1038 SECTION 150
SEG 0040 OFFSET 1110
SR 1038-150 STA 1956+35.83 AND SR 4025 OVER
BUFFALO AND PITTSBURGH RAILROAD
4 SPAN STEEL MULTI-GIRDER BRIDGE AND
SINGLE SPAN ROLLED BEAM T-SPAN
PIERS C2 THRU C5 SECTIONS

RECOMMENDED _____

SHEET 14 OF 97

S-27038

DESIGNED BY	RES
DRAWN BY	RLG
CHECKED BY	MP

KEITH A. MICHAEL
PROFESSIONAL ENGINEER
PENNSYLVANIA

A-00122496

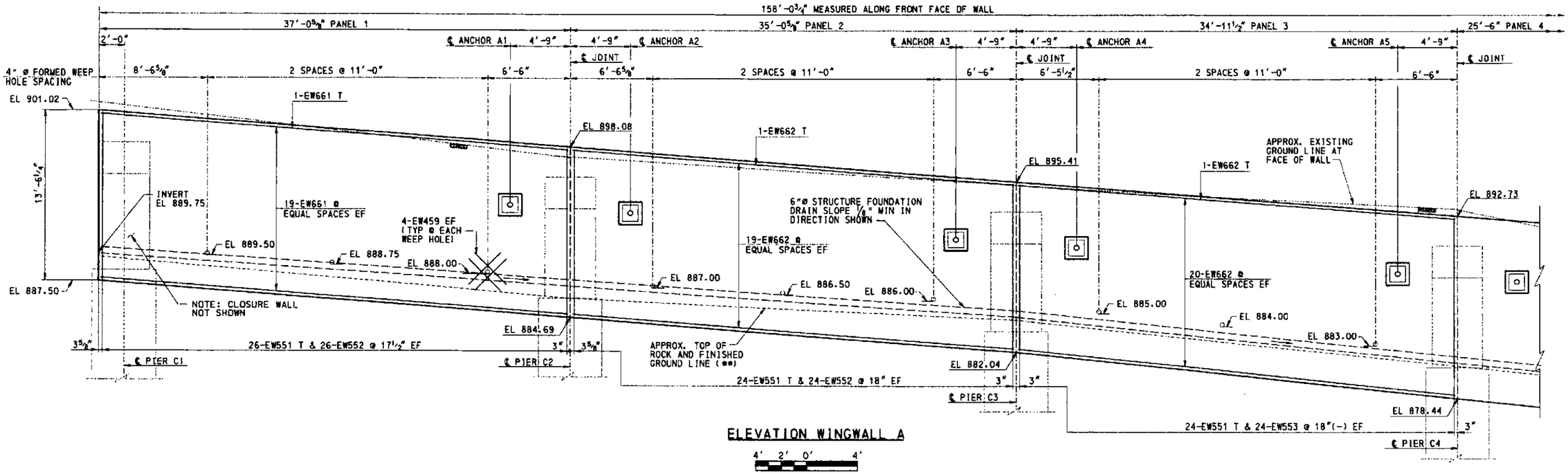

ELEVATION WINGWALL A

4' 2' 0' 4'

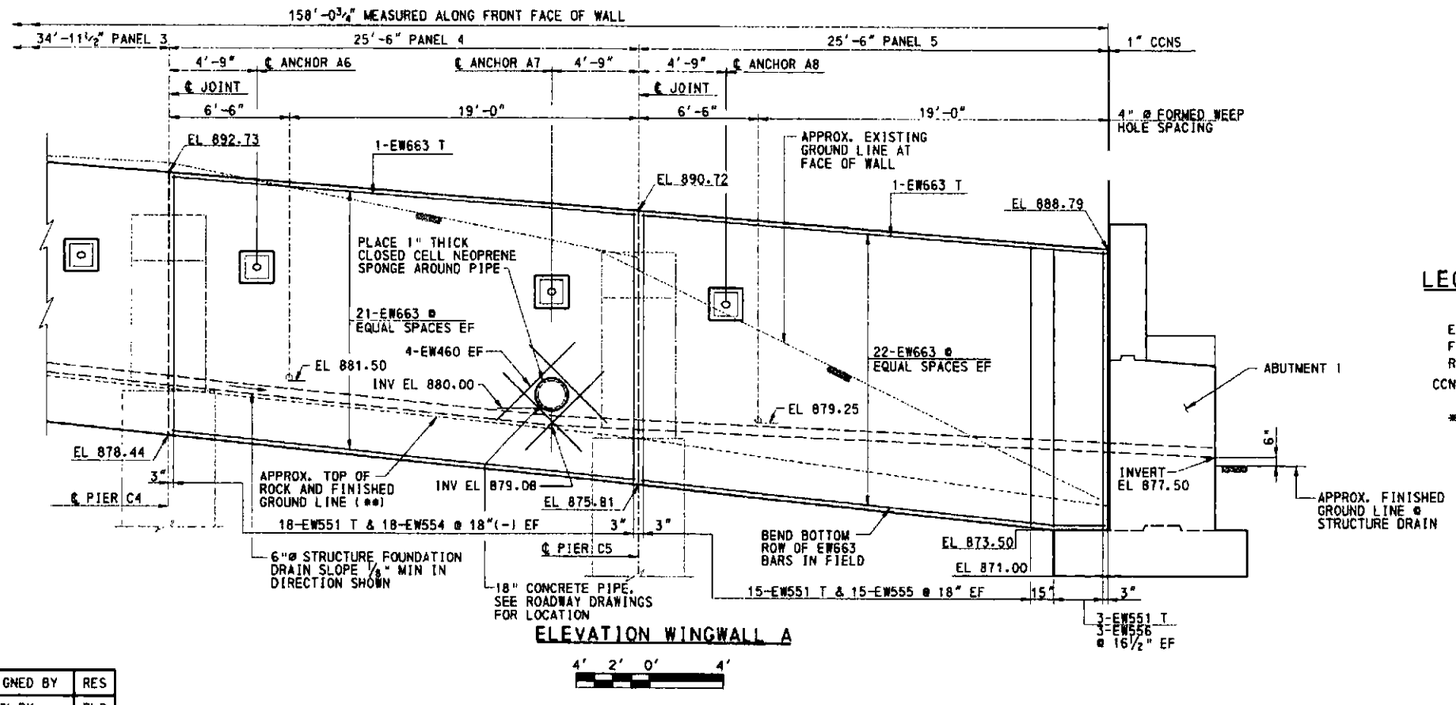

ELEVATION WINGWALL A

4' 2' 0' 4'

LEGEND

T TOP
EF EACH FACE
FF FRONT FACE
RF REAR FACE
CCNS CLOSED CELL NEOPRENE SPONGE
** (SEE NOTE SHEET 11)

NOTES:

- FOR GENERAL NOTES SEE SHEETS 5 AND 6.
- FOR STAKE OUT PLAN SEE SHEET 7.
- FOR TYPICAL WALL SECTIONS SEE SHEET 16.
- FOR ANCHOR SCHEDULE AND DETAILS SEE SHEET 17.
- FOR WINGWALL A DECK DETAILS SEE SHEET 64.
- FOR ABUTMENT 1 DETAILS SEE SHEETS 8, 9, AND 10.
- FOR PIER C1 AND CLOSURE WALL DETAILS SEE SHEETS 11 AND 12.
- FOR PIERS C2 THRU C5 DETAILS SEE SHEETS 13 AND 14.
- FOR REINFORCEMENT BAR SCHEDULE SEE SHEET 83.
- DIMENSIONS SHOWN ARE MEASURED ALONG FRONT FACE OF WALL. (RADIUS = 1611.77 WHERE APPLICABLE)

Mark	Description	By	Chk'd.	Recm'd.	Date
REVISIONS					

DESIGNED BY	RES
DRAWN BY	RLG
CHECKED BY	MP

COMMONWEALTH OF PENNSYLVANIA
DEPARTMENT OF TRANSPORTATION

ARMSTRONG COUNTY
SR 1038 SECTION 150
SEG 0040 OFFSET 1110
SR 1038-150 STA 1956+35.83 AND SR 4025 OVER
BUFFALO AND PITTSBURGH RAILROAD
4 SPAN STEEL MULTI-GIRDER BRIDGE AND
SINGLE SPAN ROLLED BEAM T-SPAN
WINGWALL A ELEVATION

COMMONWEALTH OF PENNSYLVANIA PROFESSIONAL KEITH A. MICHAEL ENGINEER

RECOMMENDED JUL 0 2007

SHEET 15 OF 97

S-27038

A-00122496

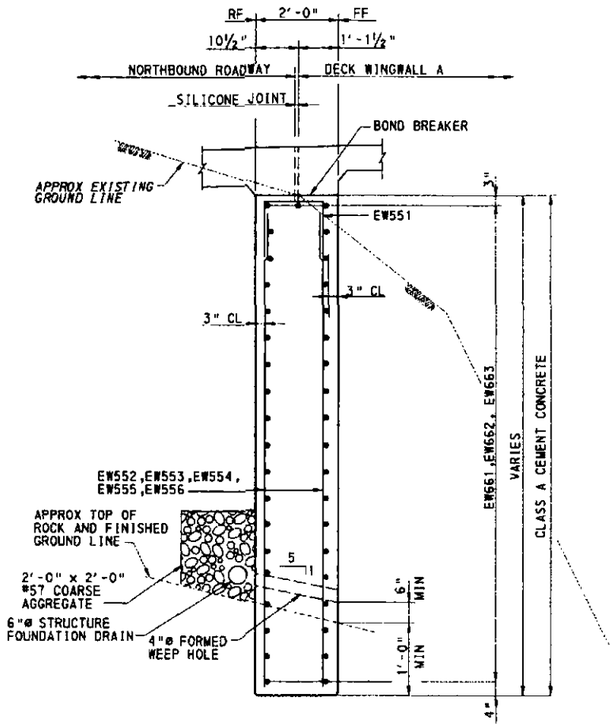

TYPICAL WALL SECTION

2' 1' 0' 2'

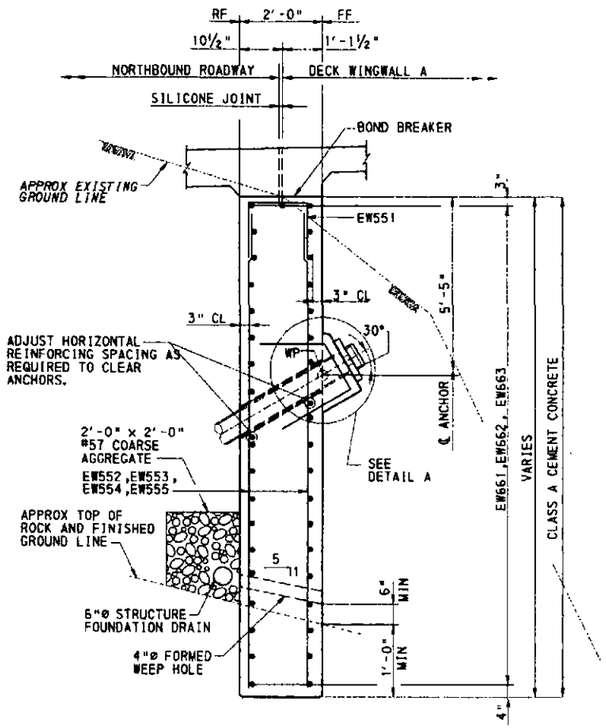

TYPICAL WALL SECTION AT ANCHOR

2' 1' 0' 2'

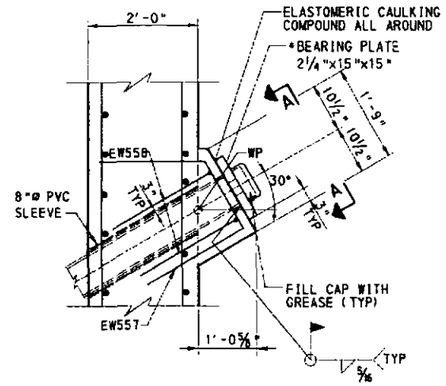

DETAIL A

2' 1' 0' 2'

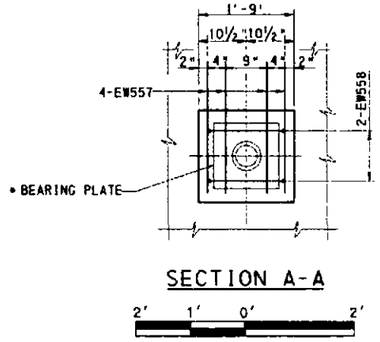

SECTION A-A

2' 1' 0' 2'

NOTES:

- FOR GENERAL NOTES SEE SHEETS 5 AND 6.
- FOR WALL ELEVATION, LEGEND AND ADDITIONAL NOTES SEE SHEET 15.
- USE ASTM A709, GR50 (GALVANIZED)

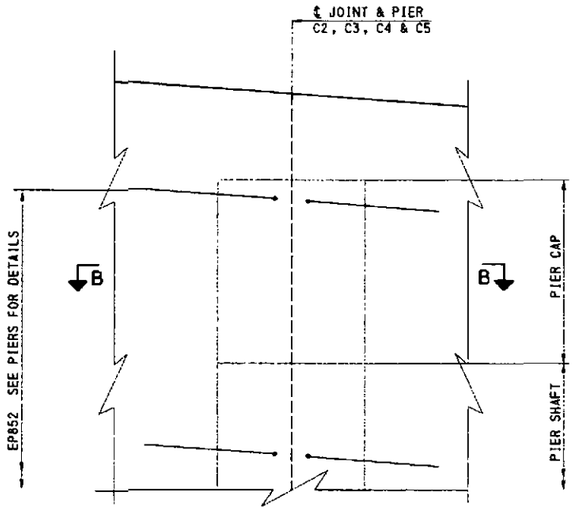

PIER CONNECTION TO WALL

2' 1' 0' 2'

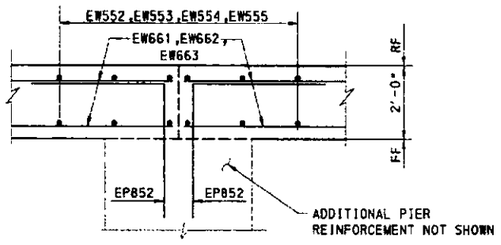

SECTION B-B

2' 1' 0' 2'

DESIGNED BY	RES
DRAWN BY	RLG
CHECKED BY	MP

Mark	Description	By	Chk'd.	Recm'd.	Date
REVISIONS					

COMMONWEALTH OF PENNSYLVANIA
DEPARTMENT OF TRANSPORTATION

ARMSTRONG COUNTY
SR 1038 SECTION 150

SEG 0040 OFFSET 1110
SR 1038-150 STA 1956+35.83 AND SR 4025 OVER
BUFFALO AND PITTSBURGH RAILROAD
4 SPAN STEEL MULTI-GIRDER BRIDGE AND
SINGLE SPAN ROLLED BEAM T-SPAN
WINGWALL A SECTIONS

COMMONWEALTH OF PENNSYLVANIA PROFESSIONAL KEITH A MICHAEL ENGINEER PENNSYLVANIA

RECOMMENDED JUL 8 2007

SHEET 16 OF 97

S-27038

A-00122496

h:\projects\0432\structure\...\Wingwall A.dgn 7/3/2007

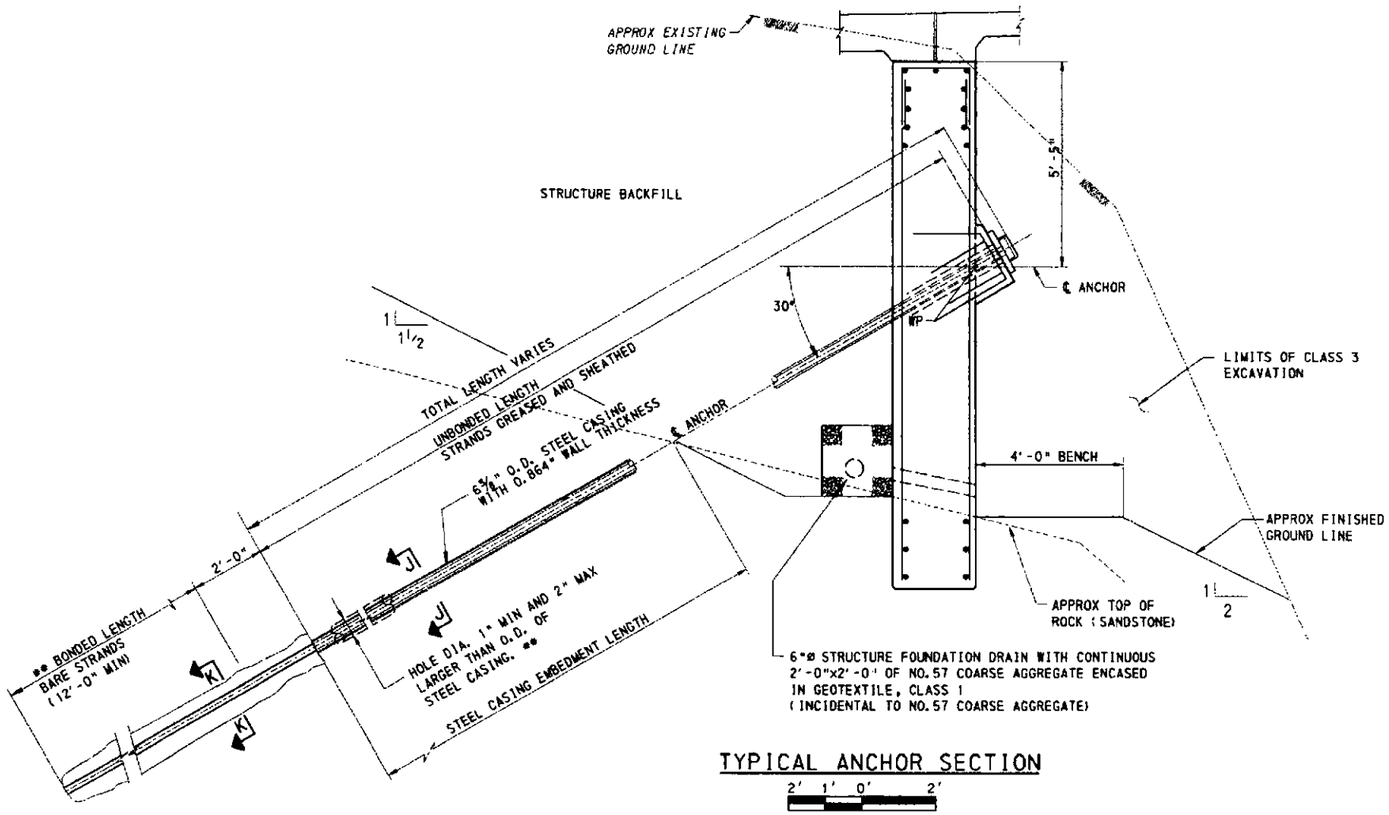

TYPICAL ANCHOR SECTION

2' 1' 0' 2'

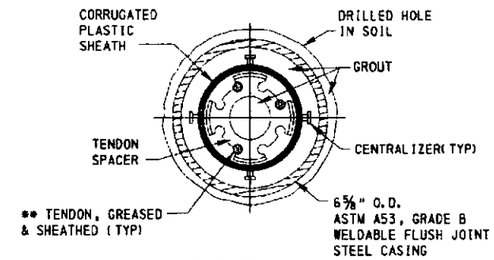

SECTION J-J

NTS

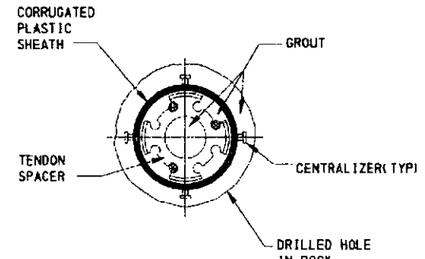

SECTION K-K

NTS

ROCK ANCHOR DESIGN LOADS (LOCK-OFF LOAD)

ANCHOR NO.	℄ ELEV	DESIGN LOAD KIPS (SERVICE)
1	893.02	150
2	892.30	150
3	890.35	150
4	889.63	150
5	887.67	150
6	886.95	150
7	885.66	150
8	884.94	150

POST-TENSIONED ANCHOR CONSTRUCTION PROCEDURE

1. CONSTRUCT REINFORCED CONCRETE WALL. ANCHOR CORBELS ARE NOT TO BE POURED AT THIS TIME, THOUGH CORBEL REINFORCEMENT WILL BE INSTALLED.
2. BACKFILL BEHIND WALL.
3. DRILL THROUGH PREFORMED HOLE IN WALL, FILL AND INTO THE ROCK TO THE REQUIRED STEEL CASING EMBEDMENT LENGTH.
4. FILL HOLE AND CASING WITH SUFFICIENT GROUT AND PLUNGE CASING TO THE FULL DEPTH OF EMBEDMENT LENGTH TO ENSURE FULL GROUTING OF ANNULAR SPACE BETWEEN CASING AND ROCK.
5. AFTER SUFFICIENT CURE OF THE GROUT, OR A MINIMUM OF 16 HOURS, DRILL ANCHOR BOND LENGTH AND INSTALL ANCHOR AND PRESSURE GROUT THE BOND LENGTH IN ACCORDANCE WITH THE SPECIAL PROVISIONS.
6. INSTALL HOT DIPPED GALVANIZED BEARING PLATE, FIELD WELD THE PLATE TO STEEL CASING AND FIELD GALVANIZE. CLEAN AND FIELD GALVANIZE THE EXPOSED END OF CASING.
7. PRIOR TO TESTING THE ANCHORS, WEDGE THE STEEL CASING IN THE HOLE THROUGH THE WALL TO FIRMLY SECURE IT. AFTER ANCHOR BOND GROUT HAS CURED AND IN ACCORDANCE WITH THE SPECIAL PROVISIONS, PERFORM LOAD TESTS AND PROOF TESTS ON THE ANCHORS AND LOCK OFF LOAD TO THE DESIGN LOAD. JACK AGAINST BEARING PLATE. DO NOT APPLY JACKING LOADS TO NEW WALL.
8. GROUT THE STEEL CASING UNTIL GROUT EMERGES FROM END OF CASING. GROUT ANNULAR SPACE BETWEEN CASING AND NEW WALL.
9. CONSTRUCT ANCHOR CORBELS. ENSURE FULL CONSOLIDATION OF CONCRETE BEHIND BEARING PLATE.
10. CUT EXCESS TENDON LENGTH, INSTALL GREASE FILLED GALVANIZED CAP, AND CAULK JOINT BETWEEN BEARING PLATE AND CONCRETE ON ALL SIDES WITH APPROVED ELASTOMERIC CAULKING COMPOUND.

LEGEND

** CONTRACTOR DESIGN

NOTES:

- FOR GENERAL NOTES SEE SHEETS 5 AND 6.
- FOR ANCHOR LOCATIONS AND WALL DETAILS SEE SHEETS 15 AND 16.

Mark	Description	By	Chk'd.	Recm'd.	Date
REVISIONS					

DESIGNED BY	RES
DRAWN BY	RLG
CHECKED BY	MP

COMMONWEALTH OF PENNSYLVANIA
DEPARTMENT OF TRANSPORTATION

ARMSTRONG COUNTY
SR 1038 SECTION 150
SEG 0040 OFFSET 1110
SR 1038-150 STA 1956+35.83 AND SR 4025 OVER BUFFALO AND PITTSBURGH RAILROAD
4 SPAN STEEL MULTI-GIRDER BRIDGE AND SINGLE SPAN ROLLED BEAM T-SPAN
WINGWALL A ANCHOR DETAILS

RECOMMENDED _____

SHEET 17 OF 97

S-27038

A-00122496

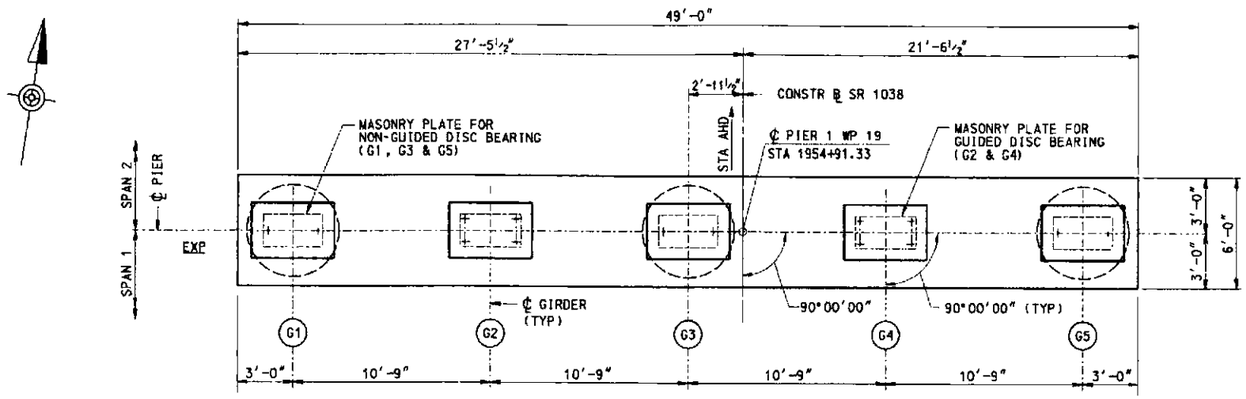

PLAN

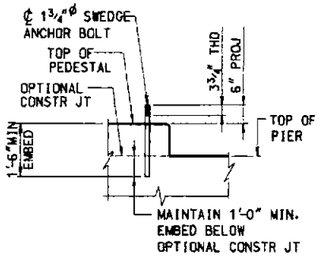

ANCHOR BOLT DETAIL
NTS

TOP OF PEDESTAL ELEVATIONS	
GIRDER NO.	ELEVATION
G1	873.96
G2	874.18
G3	874.55
G4	874.75
G5	874.92

NOTE: CONSTRUCT PEDESTALS LEVEL

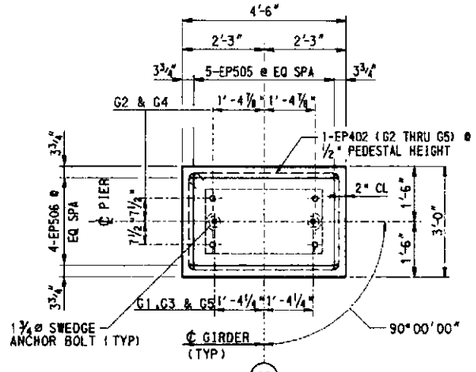

TYPICAL PEDESTAL DETAIL
(G2 & G4 AS SHOWN)
(G1, G3 & G5 SIMILAR EXCEPT AS NOTED)
2' 1' 0' 2'

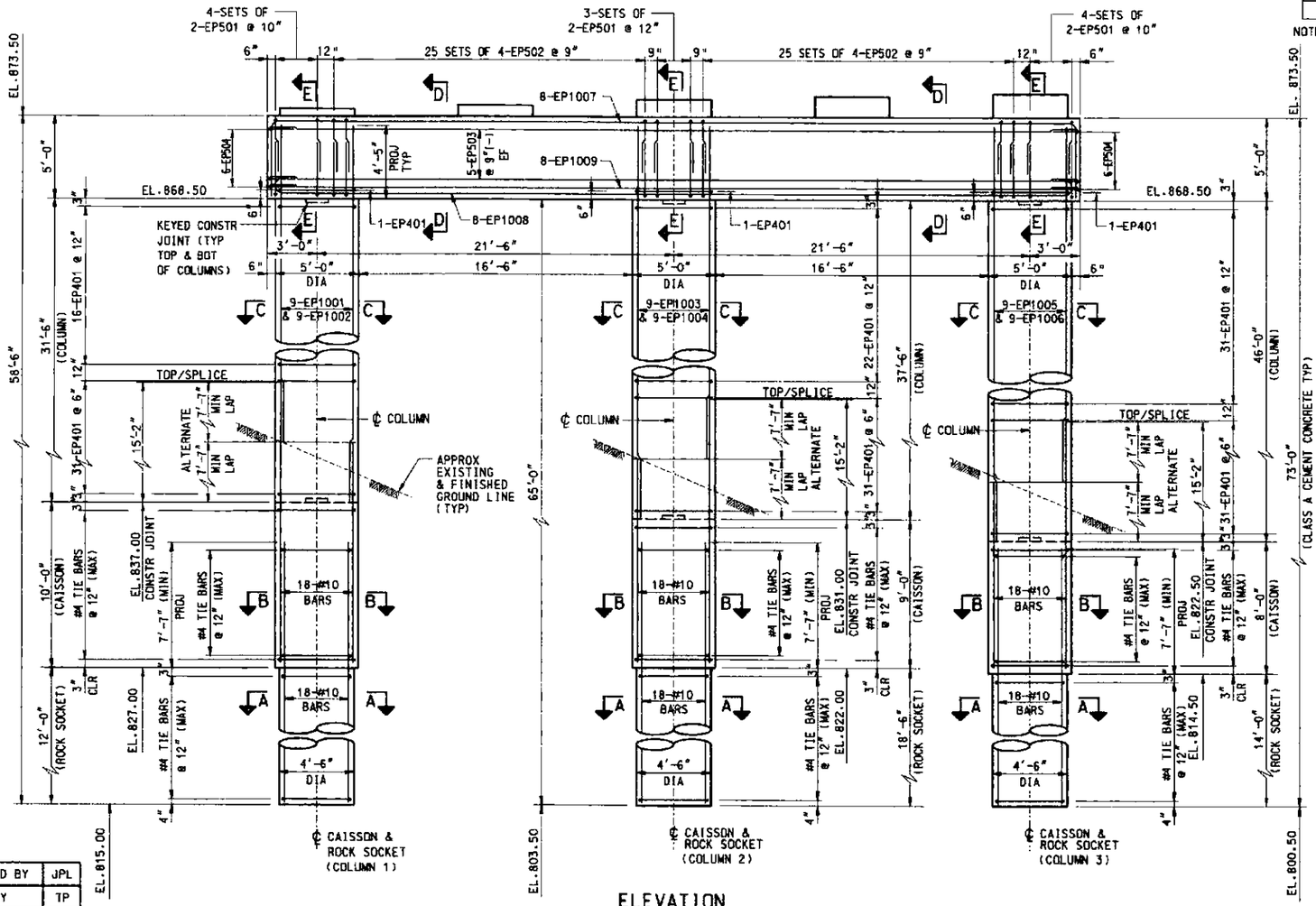

ELEVATION

4' 2' 0' 4'
UNLESS NOTED

LEGEND:

EF DENOTES EACH FACE
WP DENOTES WORK POINT
(G1) DENOTES GIRDER NUMBER

NOTES:

- ALL REINFORCEMENT IN CAISSONS AND ROCK SOCKETS ARE EPOXY COATED AND ARE INCIDENTAL TO EACH.
- FOR GENERAL NOTES SEE SHEETS 5 AND 6.
- FOR STAKE-OUT PLAN SEE SHEET 7.
- FOR SECTIONS A-A THRU E-E SEE SHEET 19
- FOR BEARING DETAILS SEE SHEETS 56 THRU 62.
- FOR REINFORCEMENT BAR SCHEDULE SEE SHEET 84.
- FOR KEYED CONSTRUCTION JT. DETAIL SEE STANDARD DWG. BC-735M
- CAISSON LOADS:

COLUMN 1
MAXIMUM FACTORED AXIAL LOAD = 666 TONS (STR I)
MAXIMUM FACTORED AXIAL RESISTANCE = 915 TONS
COLUMN 2
MAXIMUM FACTORED AXIAL LOAD = 1004 TONS (STR I)
MAXIMUM FACTORED AXIAL RESISTANCE = 1030 TONS
COLUMN 3
MAXIMUM FACTORED AXIAL LOAD = 666 TONS (STR I)
MAXIMUM FACTORED AXIAL RESISTANCE = 686 TONS

Mark	Description	By	Chk'd.	Recm'd.	Date
REVISIONS					

DESIGNED BY	JPL
DRAWN BY	TP
CHECKED BY	RLG

COMMONWEALTH OF PENNSYLVANIA
DEPARTMENT OF TRANSPORTATION

ARMSTRONG COUNTY
SR 1038 SECTION 150
SEG 0040 OFFSET 1110
SR 1038-150 STA 1956+35.83 AND SR 4025 OVER
BUFFALO AND PITTSBURGH RAILROAD
4 SPAN STEEL MULTI-GIRDER BRIDGE AND
SINGLE SPAN ROLLED BEAM T-SPAN
PIER 1 PLAN AND ELEVATION

RECOMMENDED _____

SHEET 18 OF 97
S-27038

A-00122496

H:\projects\40432\structure\w_kiffanin\pier1.dgn 7/31/2007

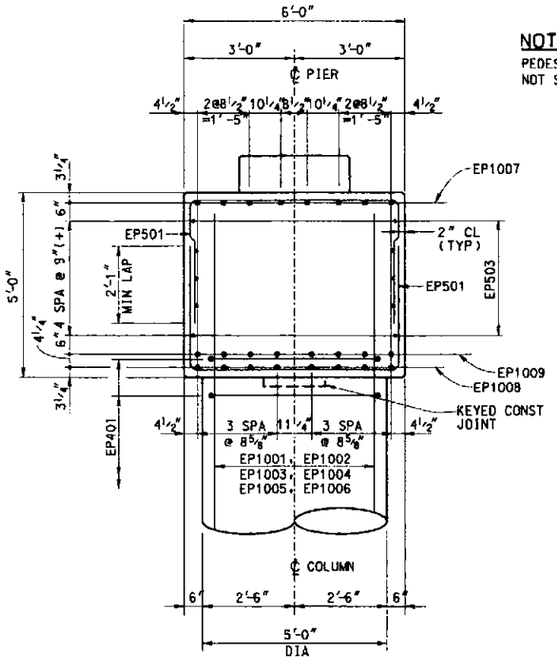

SECTION E-E

NOTE:
PEDESTAL REINFORCEMENT NOT SHOWN.

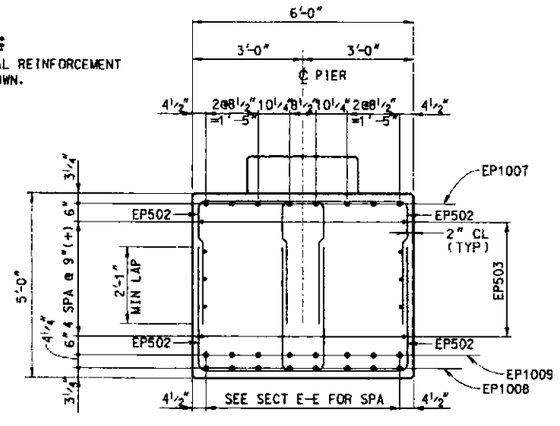

SECTION D-D

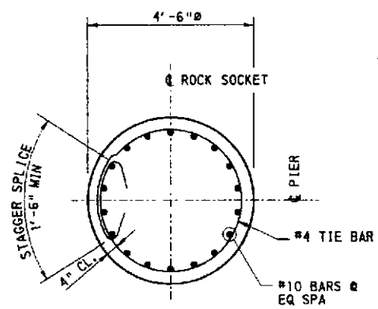

SECTION A-A

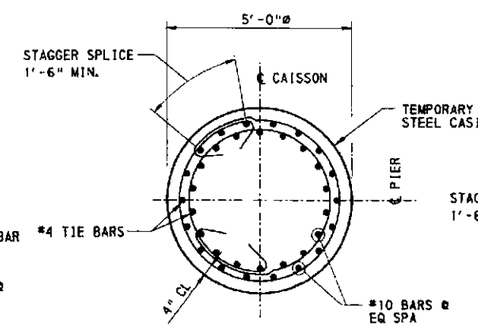

SECTION B-B

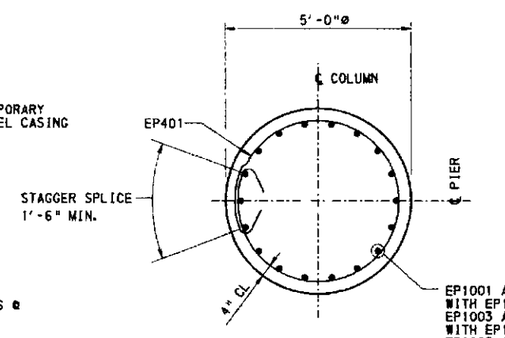

SECTION C-C

NOTES:

- FOR PIER PLAN AND ELEVATION, LOCATION OF SECTIONS, LEGEND AND ADDITIONAL NOTES SEE SHEET 18.

Mark	Description	By	Chk'd.	Recm'd.	Date
REVISIONS					

DESIGNED BY	JPL
DRAWN BY	TP
CHECKED BY	RLG

2' 1' 0' 2'

KEITH A. MICHAEL

COMMONWEALTH OF PENNSYLVANIA
DEPARTMENT OF TRANSPORTATION

ARMSTRONG COUNTY
SR 1038 SECTION 150
SEG 0040 OFFSET 1110
SR 1038-150 STA 1956+35.83 AND SR 4025 OVER
BUFFALO AND PITTSBURGH RAILROAD
4 SPAN STEEL MULTI-GIRDER BRIDGE AND
SINGLE SPAN ROLLED BEAM T-SPAN
PIER 1 SECTIONS

RECOMMENDED _____

SHEET 19 OF 97

S-27038

A-00122496

h:\projects\0432\structure\bd_1\plotting\finalplot10.dgn 7/3/2007

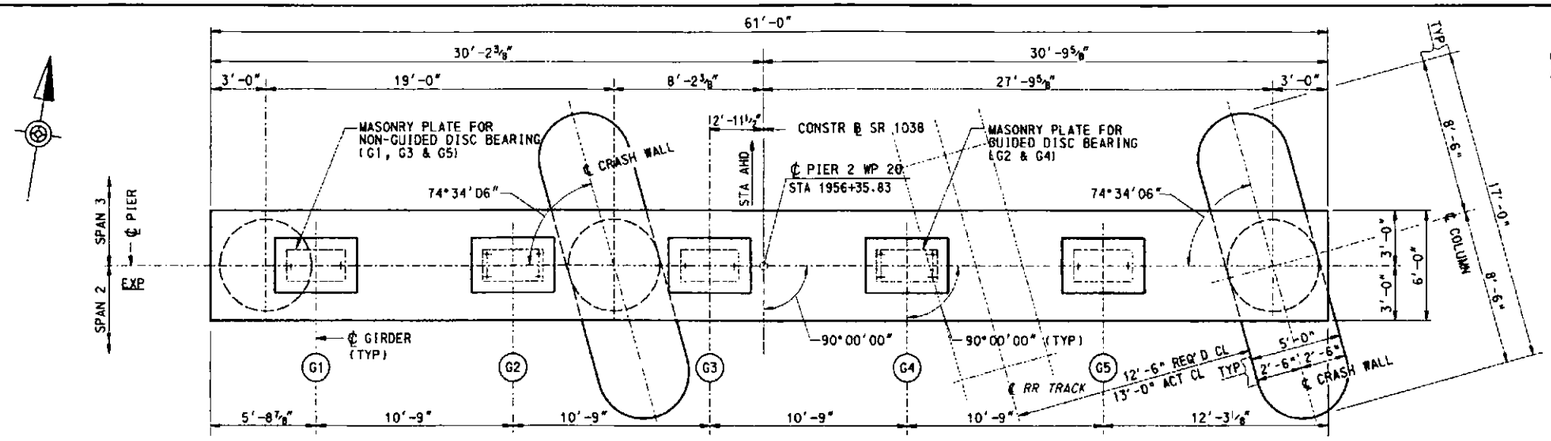

PLAN

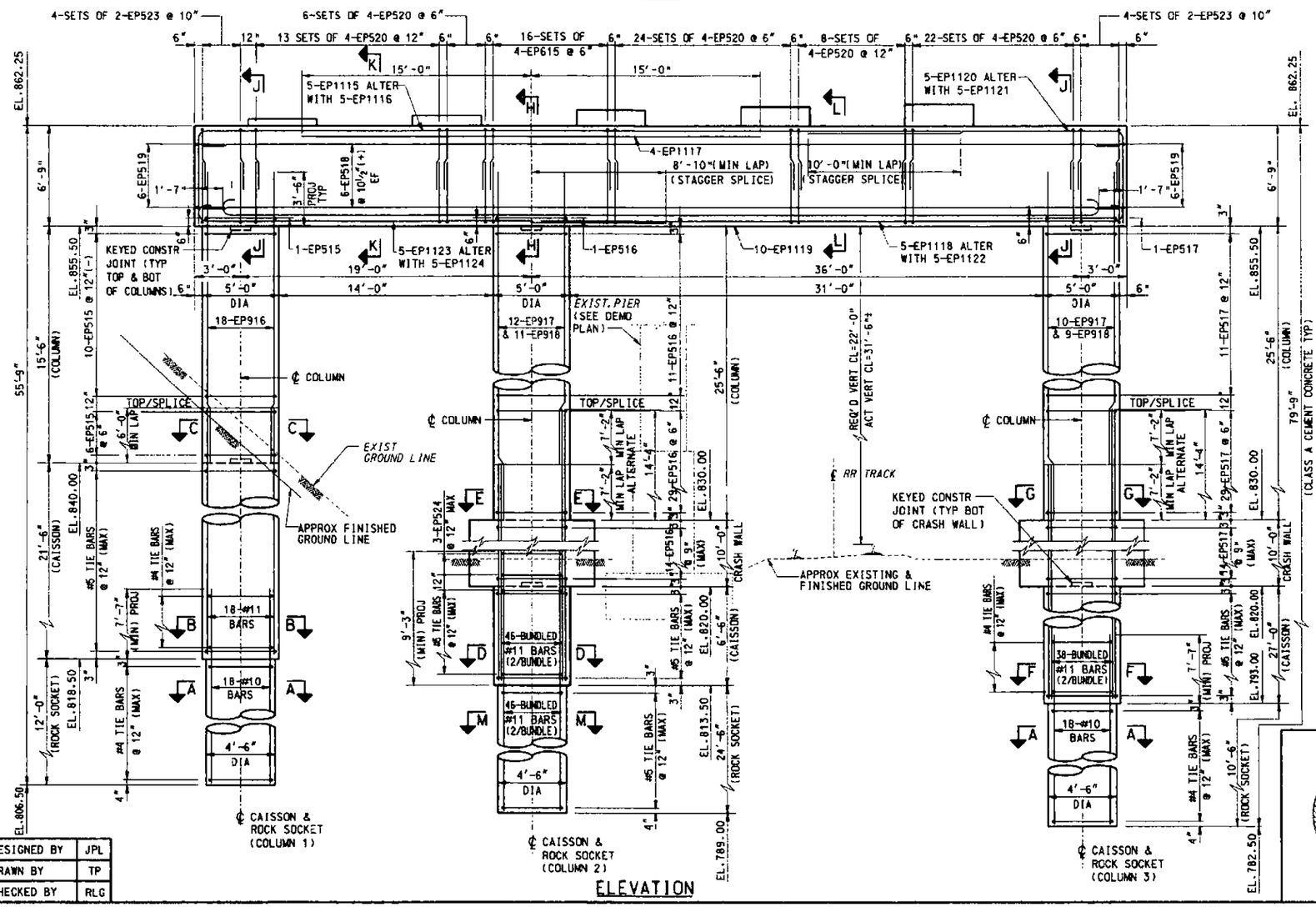

ELEVATION

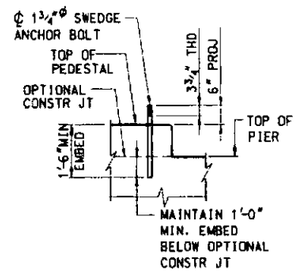

ANCHOR BOLT DETAIL
NTS

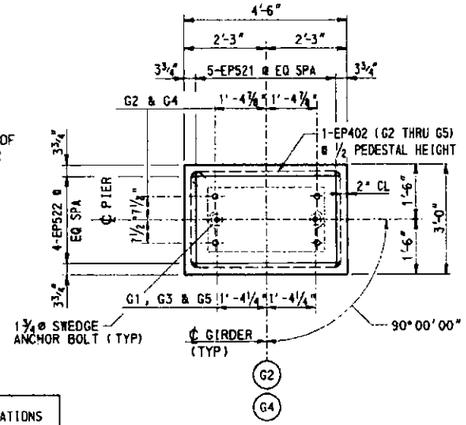

TYPICAL PEDESTAL DETAIL
(G2 & G4 AS SHOWN)
(G1, G3 & G5 SIMILAR EXCEPT AS NOTED)
2' 1' 0' 2'

TOP OF PEDESTAL ELEVATIONS	
GIRDER NO.	ELEVATION
G1	862.66
G2	863.01
G3	863.52
G4	863.87
G5	864.09

NOTE: CONSTRUCT PEDESTALS LEVEL

LEGEND:

EF DENOTES EACH FACE
WP DENOTES WORK POINT
(G1) DENOTES GIRDER NUMBER

NOTES:

- ALL REINFORCEMENT IN CAISSONS AND ROCK SOCKETS ARE EPOXY COATED AND ARE INCIDENTAL TO EACH.
- FOR GENERAL NOTES SEE SHEETS 5 AND 6.
- FOR STAKE-OUT PLAN SEE SHEET 7.
- FOR CRASH WALL DETAILS AND SECTIONS A-A THRU M-M SEE SHEET 21.
- FOR BEARING DETAILS SEE SHEETS 56 THRU 62.
- FOR REINFORCEMENT BAR SCHEDULE SEE SHEET 84
- FOR KEYED CONSTRUCTION JT. DETAIL SEE STANDARD DWG. BC-735M
- CAISSON LOADS:

  COLUMN 1
  MAXIMUM FACTORED AXIAL LOAD = 473 TONS (STR I)
  MAXIMUM FACTORED AXIAL RESISTANCE = 504 TONS
  COLUMN 2
  MAXIMUM FACTOREDAXIAL LOAD = 1435 TONS (STR I)
  MAXIMUM FACTORED AXIAL RESISTANCE = 1869 TONS
  COLUMN 3
  MAXIMUM FACTORED AXIAL LOAD = 706 TONS (STR I)
  MAXIMUM FACTORED AXIAL RESISTANCE = 800 TONS

Mark	Description	By	Chk'd.	Recm'd.	Date
REVISIONS					

DESIGNED BY	JPL
DRAWN BY	TP
CHECKED BY	RLG

4' 2' 0' 4'
UNLESS NOTED

COMMONWEALTH OF PENNSYLVANIA
DEPARTMENT OF TRANSPORTATION

ARMSTRONG COUNTY
SR 1038 SECTION 150
SEG 0040 OFFSET 1110
SR 1038-150 STA 1956+35.83 AND SR 4025 OVER BUFFALO AND PITTSBURGH RAILROAD
4 SPAN STEEL MULTI-GIRDER BRIDGE AND SINGLE SPAN ROLLED BEAM T-SPAN
PIER 2 PLAN AND ELEVATION

RECOMMENDED _____ 6 2007

SHEET 20 OF 97
S-27038

R:\BOPD\Projects\0432\final\Structure\Pier_2.dgn 7/3/2007

A-00122496

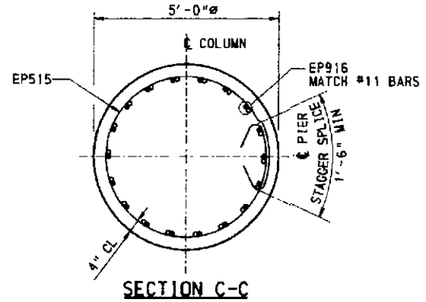

SECTION C-C

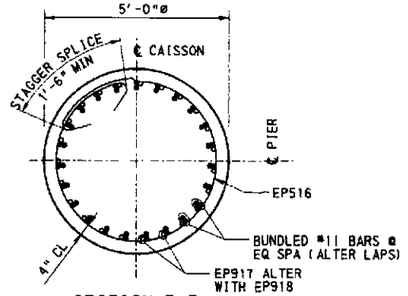

SECTION E-E

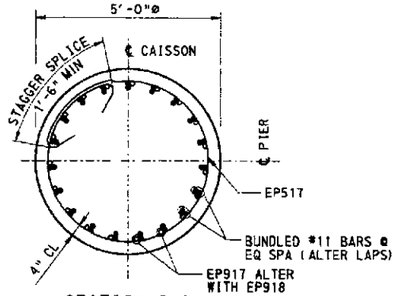

SECTION G-G

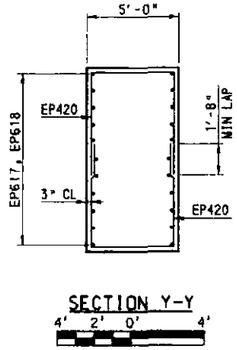

SECTION Y-Y

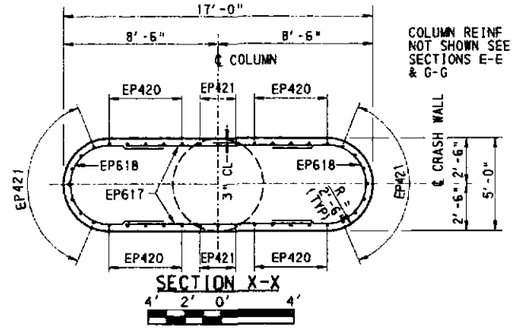

SECTION X-X

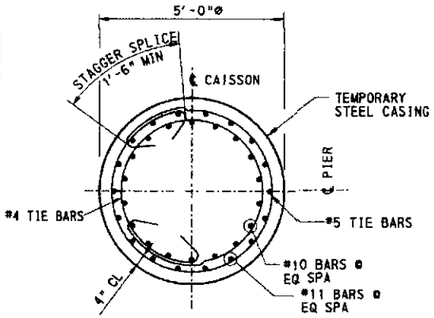

SECTION B-B

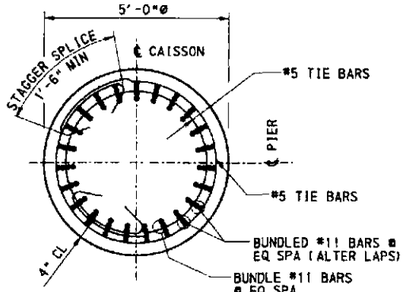

SECTION D-D

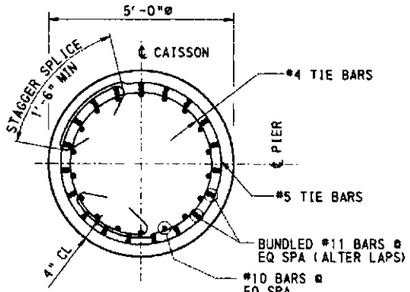

SECTION F-F

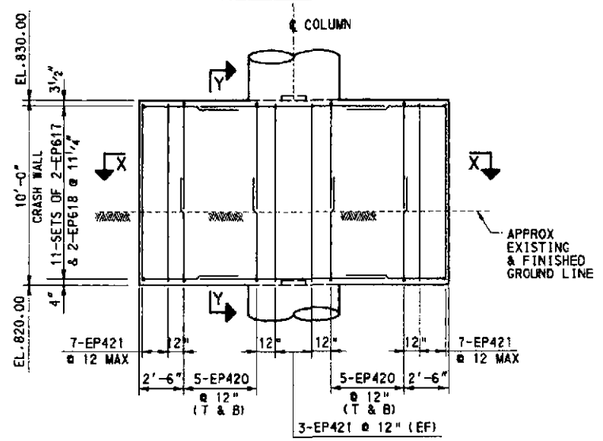

ELEVATION CRASH WALL

4' 2' 0' 4'

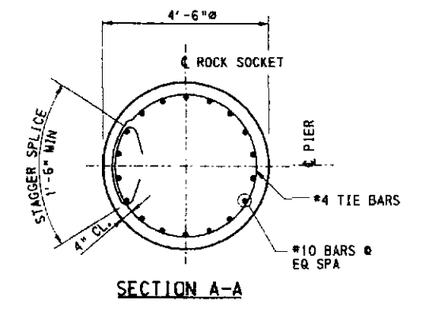

SECTION A-A

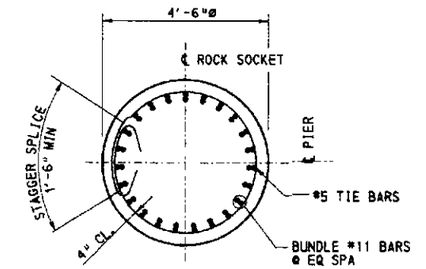

SECTION M-M

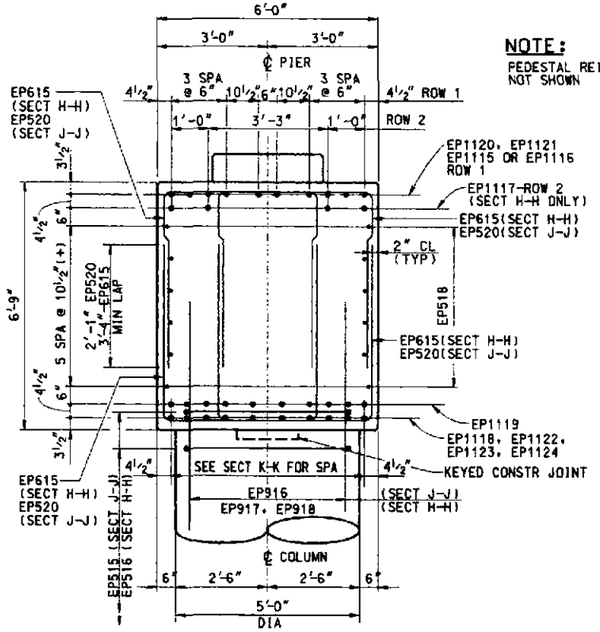

SECTION H-H
(AS SHOWN)

SECTION J-J
(SIMILAR EXCEPT AS NOTED)

NOTE:
PEDESTAL REINFORCEMENT NOT SHOWN

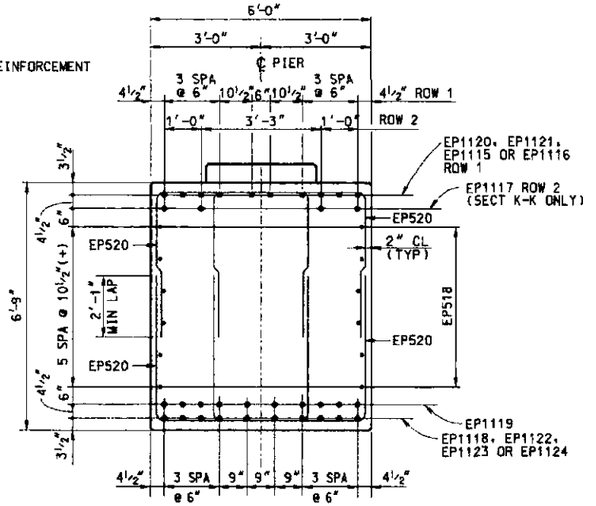

SECTION K-K
(AS SHOWN)

SECTION L-L
(SIMILAR EXCEPT AS NOTED)

2' 1' 0' 2'
(UNLESS NOTED)

NOTES:

- FOR PIER PLAN AND ELEVATION, LOCATION OF SECTION, LEGEND AND ADDITIONAL NOTES SEE SHEET 20.

Mark	Description	By	Chk'd.	Recm'd.	Date
REVISIONS					

DESIGNED BY	JPL
DRAWN BY	TP
CHECKED BY	RLG

COMMONWEALTH OF PENNSYLVANIA
DEPARTMENT OF TRANSPORTATION

ARMSTRONG COUNTY
SR 1038 SECTION 150

SEG 0040 OFFSET 1110
SR 1038-150 STA 1956+35.83 AND SR 4025 OVER
BUFFALO AND PITTSBURGH RAILROAD
4 SPAN STEEL MULTI-GIRDER BRIDGE AND
SINGLE SPAN ROLLED BEAM T-SPAN
PIER 2 SECTIONS & DETAILS

RECOMMENDED _____ 2007

SHEET 21 OF 97

S-27038

A-00122496

h:\projects\038-52\structure\w_kittaning\final\pier2s.dgn 1/3/2007

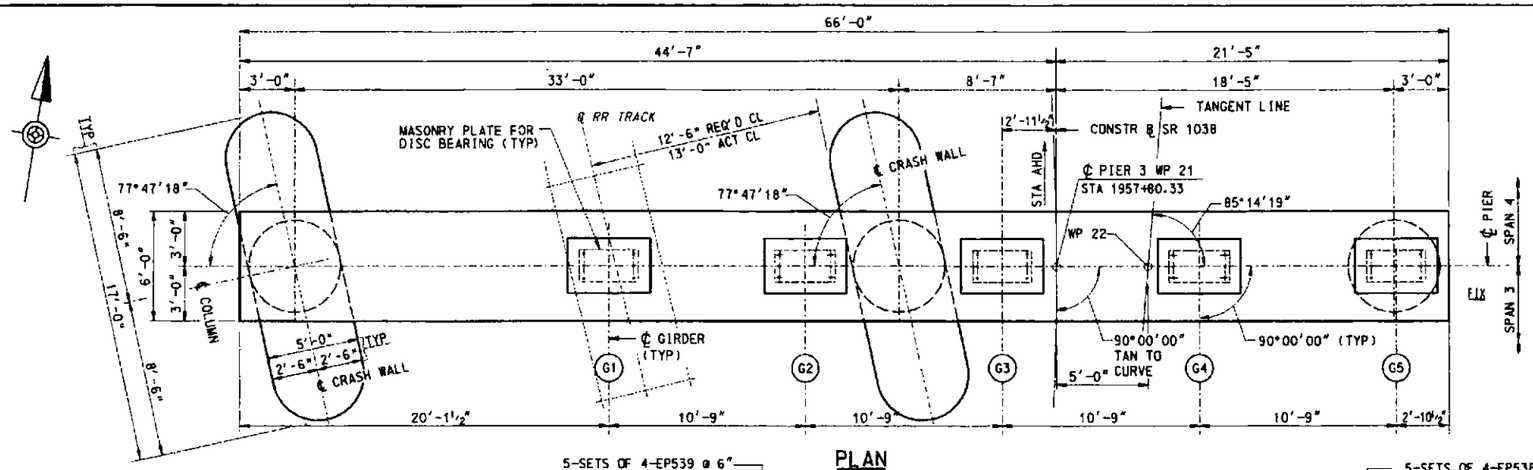

PLAN

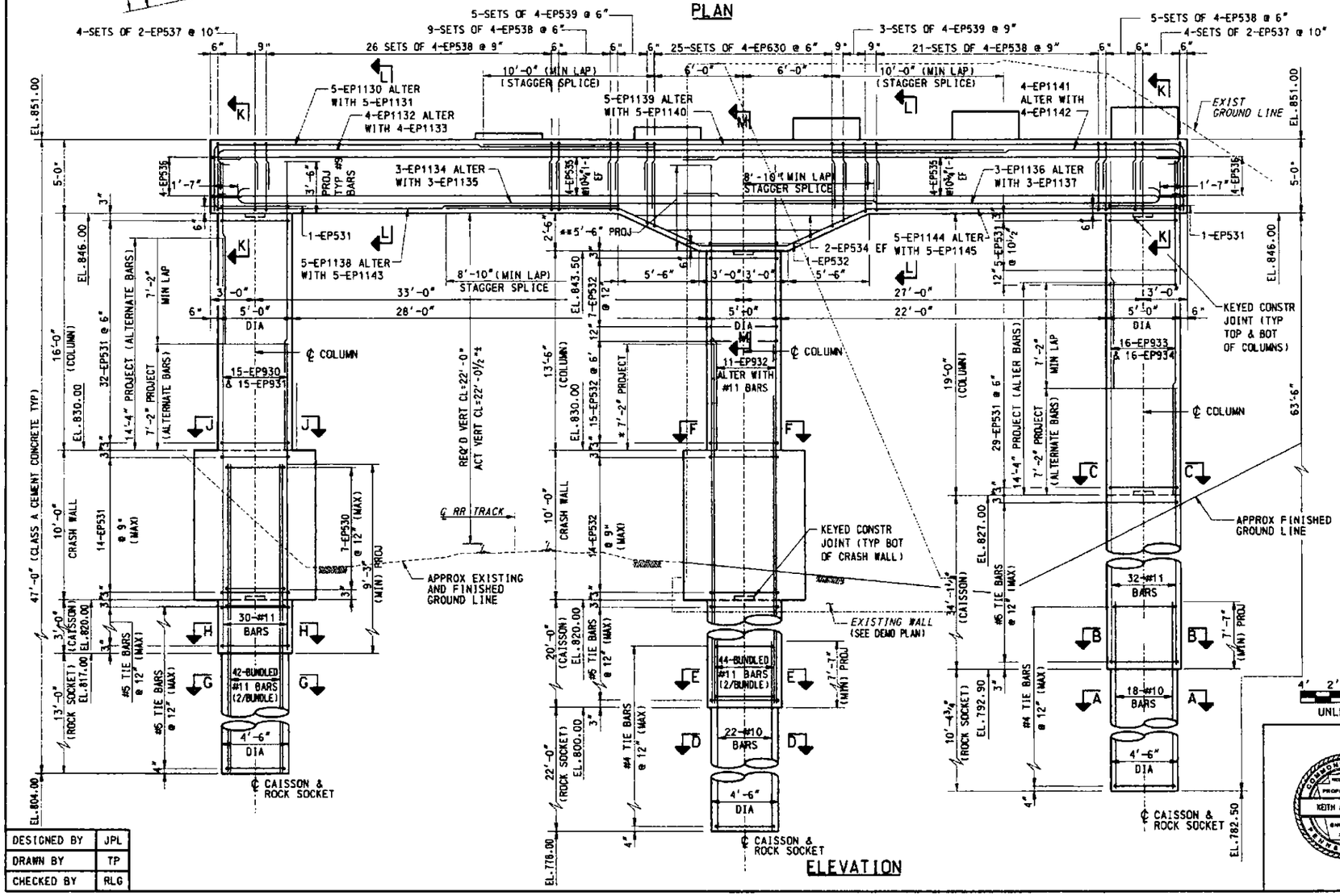

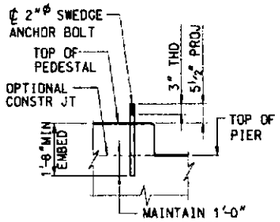

ANCHOR BOLT DETAIL
NTS

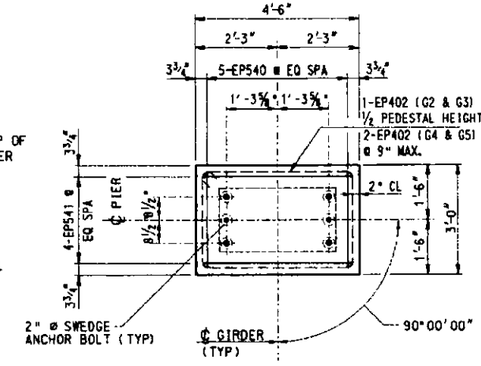

TYPICAL PEDESTAL DETAIL

2' 1' 0' 2'

TOP OF PEDESTAL ELEVATIONS	
GIRDER NO.	ELEVATION
G1	851.41
G2	851.85
G3	852.46
G4	852.90
G5	853.15

NOTE: CONSTRUCT PEDESTALS LEVEL

LEGEND:
EF DENOTES EACH FACE
WP DENOTES WORK POINT
(G1) DENOTES GIRDER NUMBER

* PROJECT 33- #11 BARS 7'-2", CONTINUE 11- #11 BARS 5'-6" MIN INTO PIER CAP

** ALL EP932 BARS AND 11- #11 BARS

NOTES:
- ALL REINFORCEMENT IN CAISSONS AND ROCK SOCKETS ARE EPOXY COATED AND ARE INCIDENTAL TO EACH.
- FOR GENERAL NOTES SEE SHEETS 5 AND 6.
- FOR STAKE-OUT PLAN SEE SHEET 7.
- FOR CRASH WALL DETAILS SEE SHEET 21.
- FOR SECTIONS A-A THRU M-M SEE SHEET 23.
- FOR BEARING DETAILS SEE SHEETS 56 THRU 62.
- FOR REINFORCEMENT BAR SCHEDULE SEE SHEET 84.
- FOR KEYED CONSTRUCTION JT. DETAIL SEE STANDARD DWG. BC-735M
- CAISSON LOADS:

COLUMN 1
MAXIMUM FACTORED AXIAL LOAD = 391 TONS (STR I)
MAXIMUM FACTORED AXIAL RESISTANCE = 610 TONS
COLUMN 2
MAXIMUM FACTORED AXIAL LOAD = 1569 TONS (STR I)
MAXIMUM FACTORED AXIAL RESISTANCE = 1678 TONS
COLUMN 3
MAXIMUM FACTORED AXIAL LOAD = 696 TONS (STR I)
MAXIMUM FACTORED AXIAL RESISTANCE = 793 TONS

Mark	Description	By	Chk'd.	Recm'd.	Date
REVISIONS					

DESIGNED BY	JPL
DRAWN BY	TP
CHECKED BY	RLG

4' 2' 0' 4'
UNLESS NOTED

COMMONWEALTH OF PENNSYLVANIA
DEPARTMENT OF TRANSPORTATION

ARMSTRONG COUNTY
SR 1038 SECTION 150
SEG 0040 OFFSET 1110
SR 1038-150 STA 1956+35.83 AND SR 4025 OVER BUFFALO AND PITTSBURGH RAILROAD
4 SPAN STEEL MULTI-GIRDER BRIDGE AND SINGLE SPAN ROLLED BEAM T-SPAN
PIER 3 PLAN AND ELEVATION

RECOMMENDED _____ JSR © 2007

SHEET 22 OF 97
S-27038

h:\projects\0432\structure\rg_kittanning\rnd\pier3.dgn 7/31/2007

A-00122496

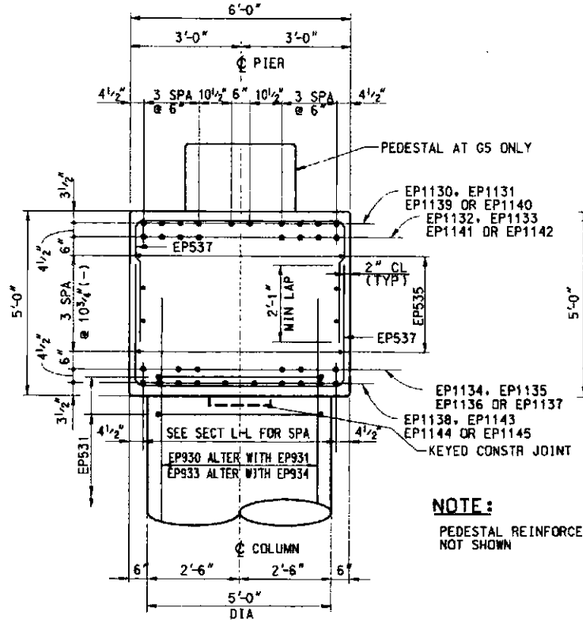

SECTION K-K

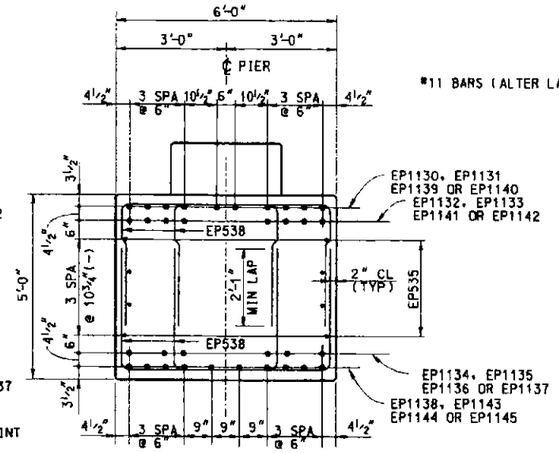

SECTION L-L

NOTE:

PEDESTAL REINFORCEMENT NOT SHOWN

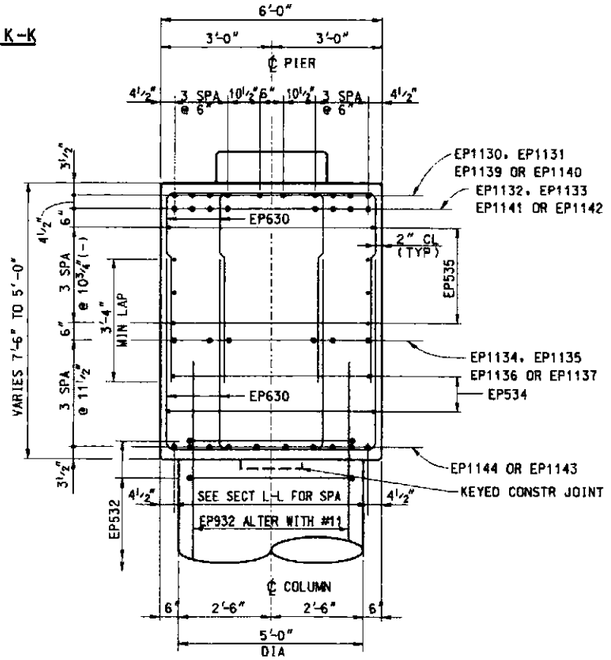

SECTION M-M

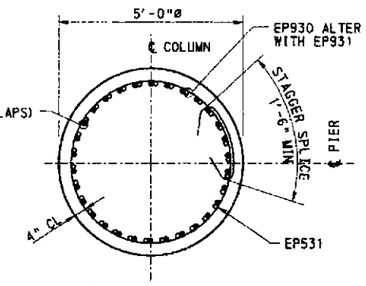

SECTION J-J

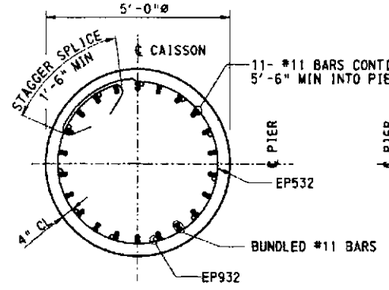

SECTION F-F

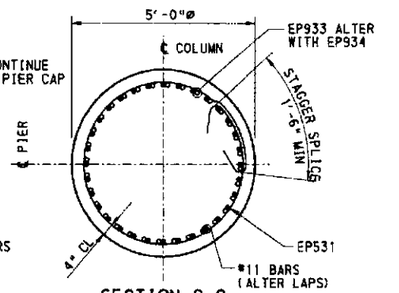

SECTION C-C

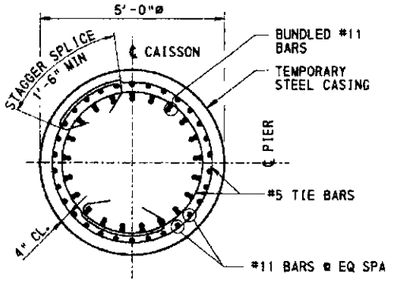

SECTION H-H

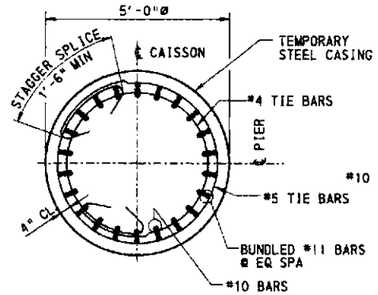

SECTION E-E

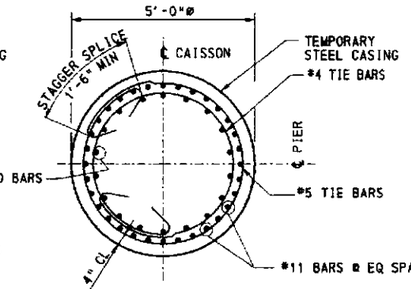

SECTION B-B

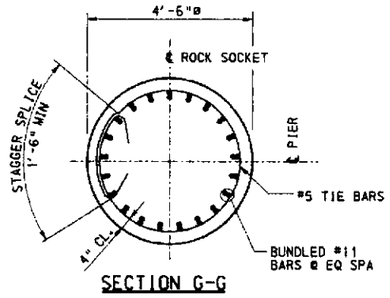

SECTION G-G

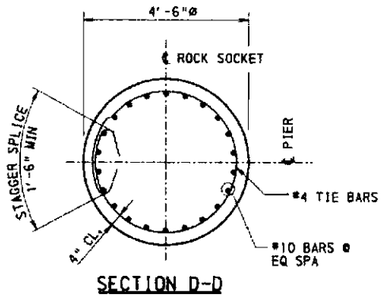

SECTION D-D

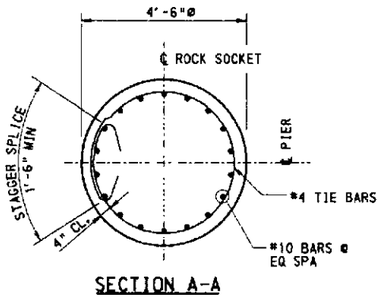

SECTION A-A

Mark	Description	By	Chk'd.	Recm'd.	Date
REVISIONS					

NOTE:

- FOR PIER PLAN AND ELEVATION, LOCATION OF SECTIONS, LEGEND AND ADDITIONAL NOTES SEE SHEET 22.

DESIGNED BY	JPL
DRAWN BY	TP
CHECKED BY	RLG

2' 1' 0' 2'

COMMONWEALTH OF PENNSYLVANIA
DEPARTMENT OF TRANSPORTATION

ARMSTRONG COUNTY
SR 1038 SECTION 150
SEG 0040 OFFSET 1110
SR 1038-150 STA 1956+35.83 AND SR 4025 OVER
BUFFALO AND PITTSBURGH RAILROAD
4 SPAN STEEL MULTI-GIRDER BRIDGE AND
SINGLE SPAN ROLLED BEAM T-SPAN
PIER 3 SECTIONS

RECOMMENDED _____

SHEET 23 OF 97

S-27038

A-00122496

h:\projects\0432\structure\K-Ffcontinger\inst\sp-er3d.dgn 7/3/2007

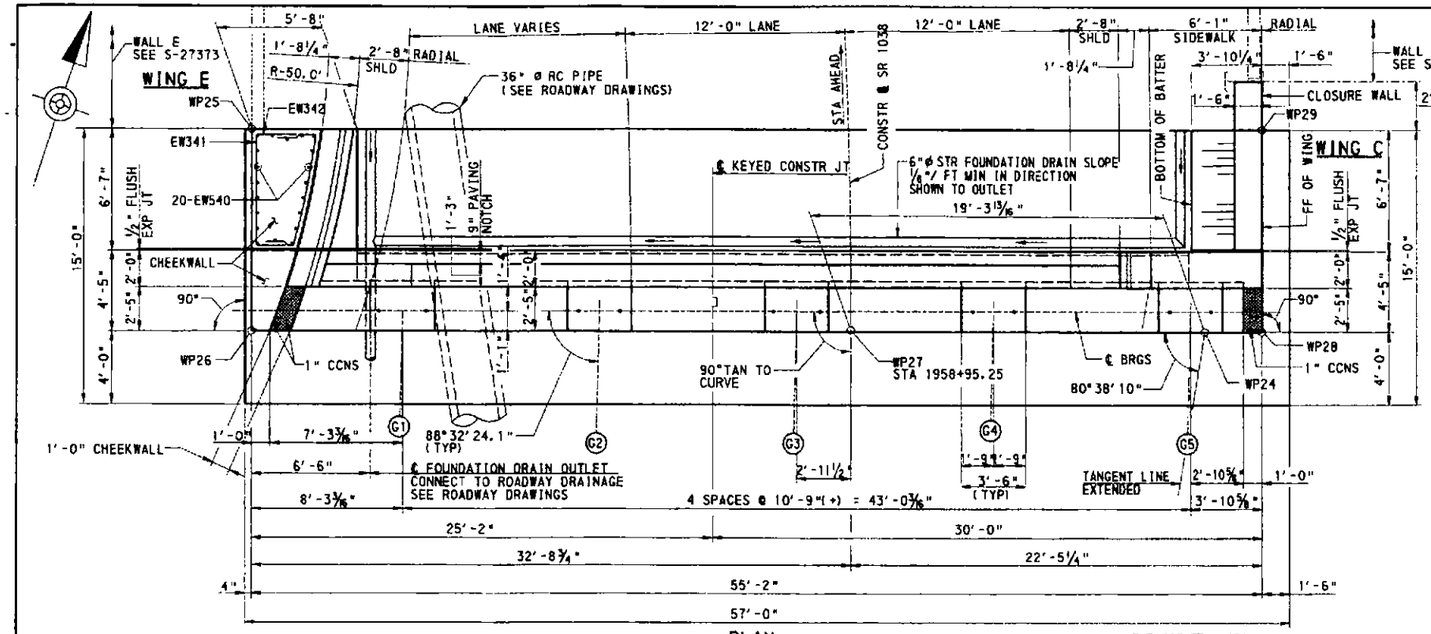

BEARING SEAT ELEVATIONS	
GIRDER NO	ELEVATION
G1	842.96
G2	843.32
G3	843.80
G4	844.25
G5	844.45

NOTES:

- FOR STAKE OUT PLAN SEE SHEET 7
- FOR FOOTING PLAN & CAISSON DETAILS, SEE SHEET 25
- FOR SECTIONS B-B THRU D-D AND PEDESTAL DETAILS SEE SHEET 26
- FOR WINGWALL C & E DETAILS SEE SHEET 27
- FOR BEARING DETAILS SEE SHEETS 56 THRU 62
- FOR REINFORCEMENT BAR SCHEDULE SEE SHEET 85
- FOR KEYED CONST JT DETAILS SEE STANDARD DRAWING BC-735M
- FOR ADDITIONAL WATERPROOFING DETAILS SEE STANDARD DRAWING BC-788M
- FOR ADDITIONAL STRUCTURE FOUNDATION DRAIN DETAILS SEE STANDARD DRAWING BC-751M

LEGEND:

FF FRONT FACE
RF REAR FACE
EF EACH FACE
▬ ALTERNATE 90° AND 135° HOOKS IN ALTERNATE TIES
* SEE SECTION A-A FOR LOCATION
** TIE TO STUDS ON STRIP SEAL DAM
CCNS CLOSED CELL NEOPRENE SPONGE
*** CONTINUOUS 2'-0"x2'-0" OF NO.57 COARSE AGGREGATE ENCASED IN GEOTEXTILE, CLASS 1 (INCIDENTAL TO NO.57 COARSE AGGREGATE)

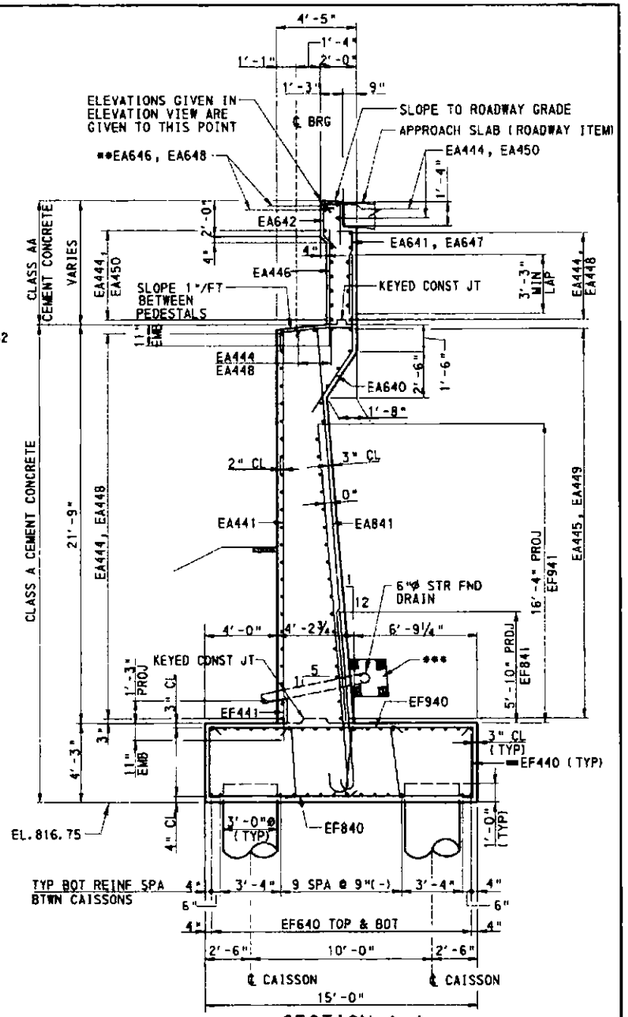

SECTION A-A

Mark	Description	By	Chk'd.	Recm'd.	Date
REVISIONS					

4' 2' 0' 4'
UNLESS NOTED

DESIGNED BY	BGC
DRAWN BY	ERK
CHECKED BY	MP

COMMONWEALTH OF PENNSYLVANIA
DEPARTMENT OF TRANSPORTATION

ARMSTRONG COUNTY
SR 1038 SECTION 150
SEG 0040 OFFSET 1110
SR 1038-150 STA 1956+35.83 AND SR 4025 OVER BUFFALO AND PITTSBURGH RAILROAD
4 SPAN STEEL MULTI-GIRDER BRIDGE AND SINGLE SPAN ROLLED BEAM T-SPAN
ABUTMENT 2 PLAN AND ELEVATION

RECOMMENDED _____

SHEET 24 OF 97
S-27038

h:\projects\4432\structure\dgn\27038_bridgeplan02.dgn 7/31/2007

A-00122496

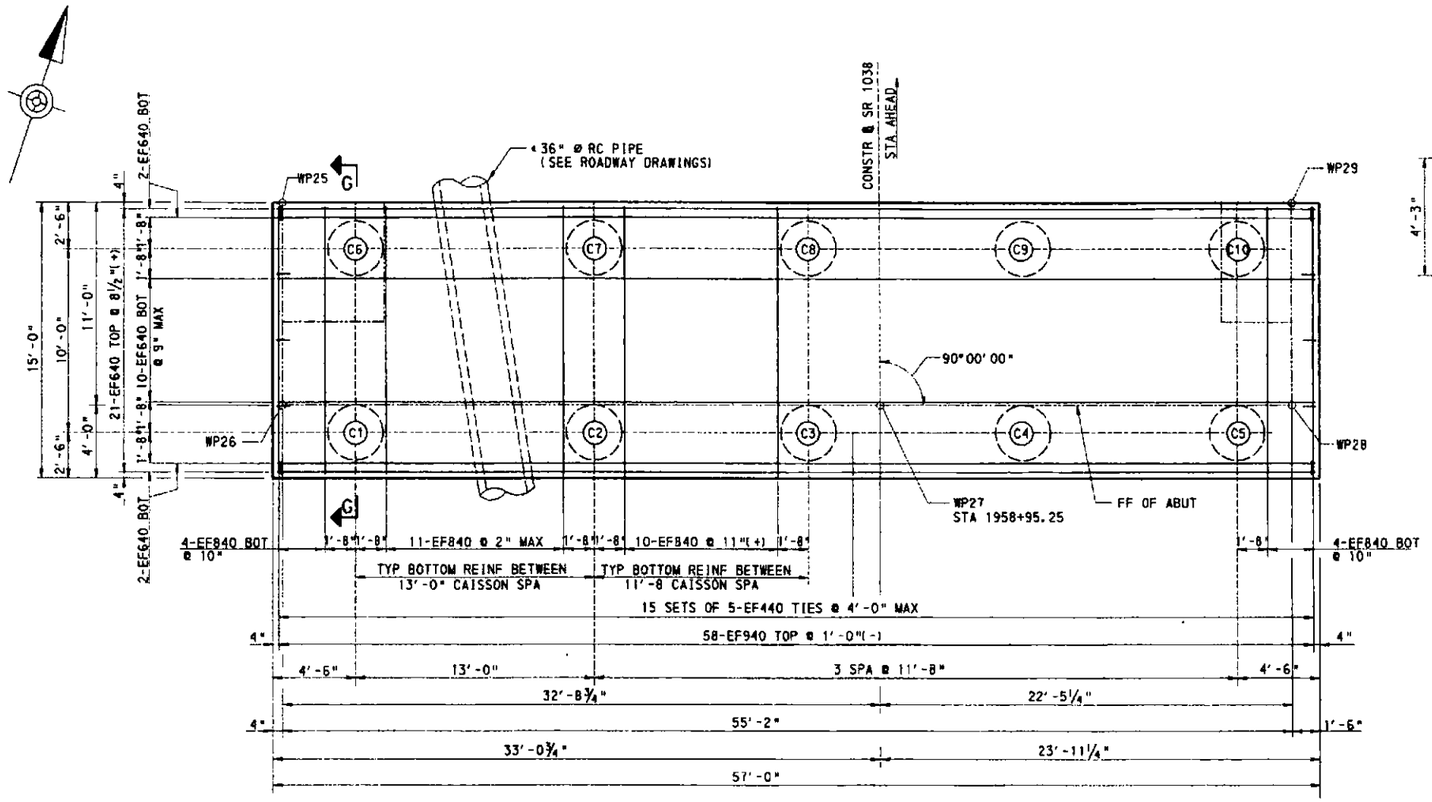

PLAN

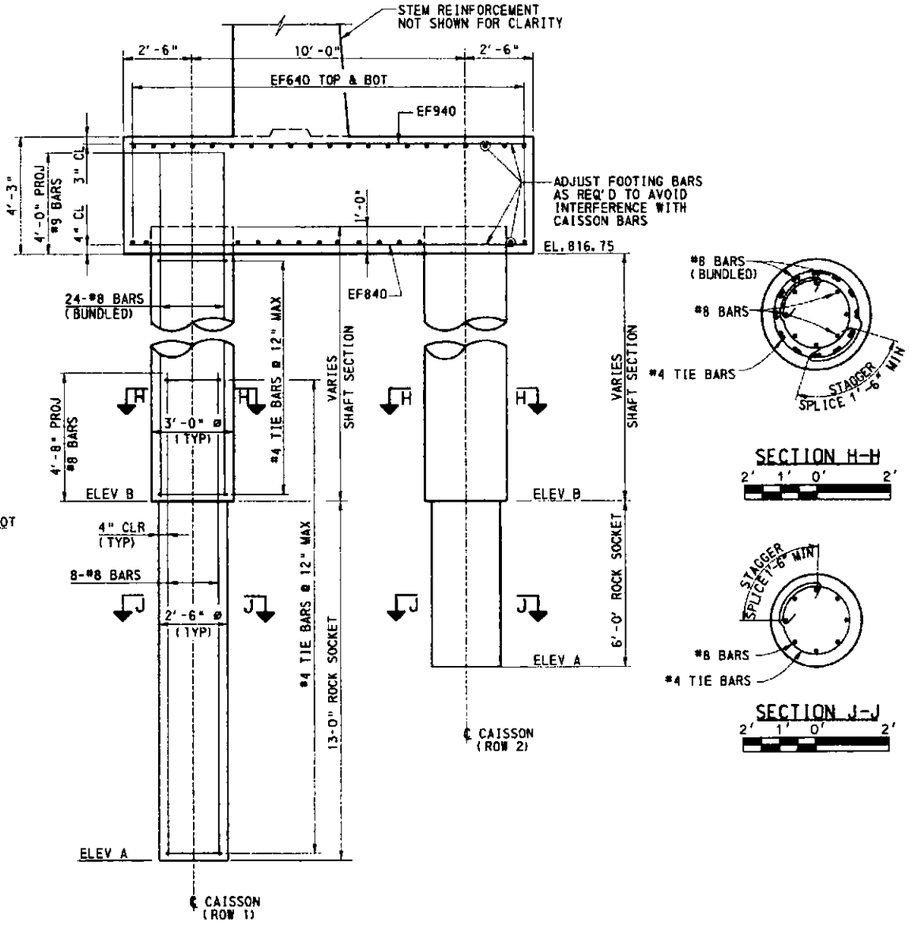

CAISSON ELEVATIONS		
CAISSON NO	ELEV A	ELEV B
C1	788.30	801.30
C2	782.28	795.28
C3	777.69	790.69
C4	771.69	784.69
C5	765.95	778.95
C6	795.30	801.30
C7	789.28	795.28
C8	784.69	790.69
C9	778.69	784.69
C10	772.95	778.95

NOTE

- ALL REINFORCEMENT IN CAISSONS AND ROCK SOCKETS IS EPOXY COATED AND IS INCIDENTAL TO EACH
- FOR GENERAL NOTES SEE SHEETS 5 AND 6
- FOR STAKE OUT PLAN SEE SHEET 7
- FOR ABUTMENT STEM DETAILS, SEE SHEET 24
- FOR WINGWALLS C & E DETAILS, SEE SHEET 27
- FOR REINFORCEMENT BAR SCHEDULE SEE SHEET 85
- CAISSON LOADS:
  ROW 1:
  MAXIMUM FACTORED AXIAL LOAD = 524 TONS (STR-1)
  MAXIMUM FACTORED AXIAL RESISTANCE = 546 TONS
  ROW 2:
  MAXIMUM FACTORED AXIAL LOAD = 218 TONS (STR-1)
  MAXIMUM FACTORED AXIAL RESISTANCE = 252TONS

LEGEND

* COORDINATE INSTALLATION OF 36Ø RC PIPE WITH ABUTMENT CONSTRUCTION. REFER TO ROADWAY PLANS FOR CONSTRUCTION SEQUENCE.

4' 2' 0' 4'
UNLESS NOTED

Mark	Description	By	Chk'd.	Recm'd.	Date
REVISIONS					

COMMONWEALTH OF PENNSYLVANIA
DEPARTMENT OF TRANSPORTATION

ARMSTRONG COUNTY
SR 1038 SECTION 150
SEG 0040 OFFSET 1110
SR 1038-150 STA 1956+35.83 AND SR 4025 OVER
BUFFALO AND PITTSBURGH RAILROAD
4 SPAN STEEL MULTI-GIRDER BRIDGE AND
SINGLE SPAN ROLLED BEAM T-SPAN
ABUTMENT 2 FOOTING PLAN

RECOMMENDED _____

SHEET 25 OF 97

S-27038

DESIGNED BY	BGC
DRAWN BY	ERK
CHECKED BY	MP

P:\epro\actual\structures_kittanning#1\abut2#1d.dgn 7/27/2007

A-00122496

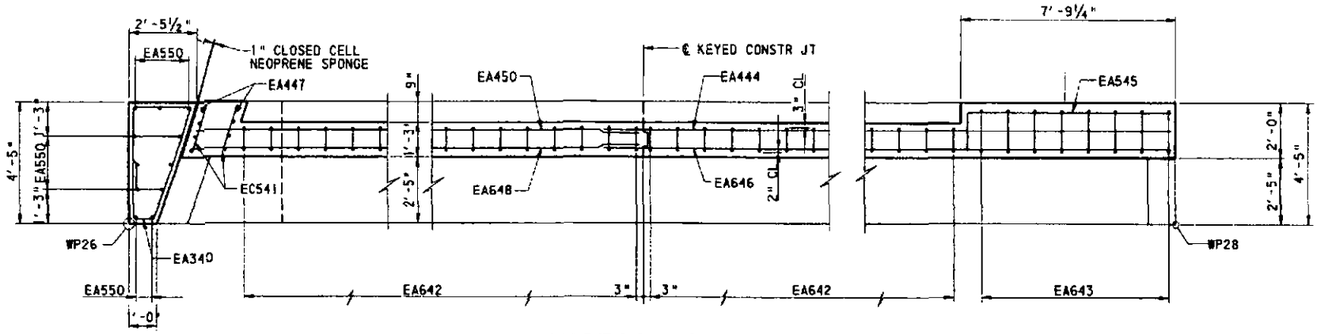

SECTION D-D

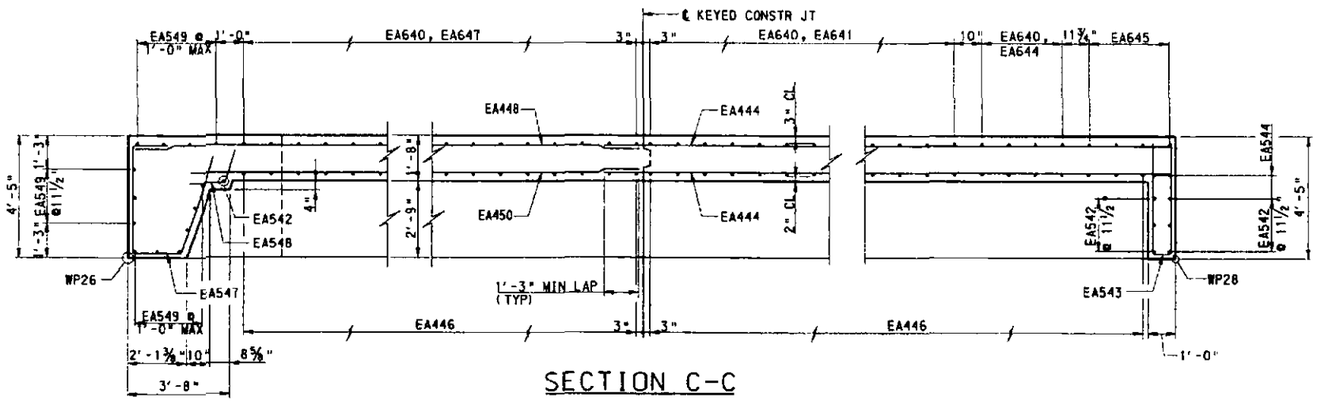

SECTION C-C

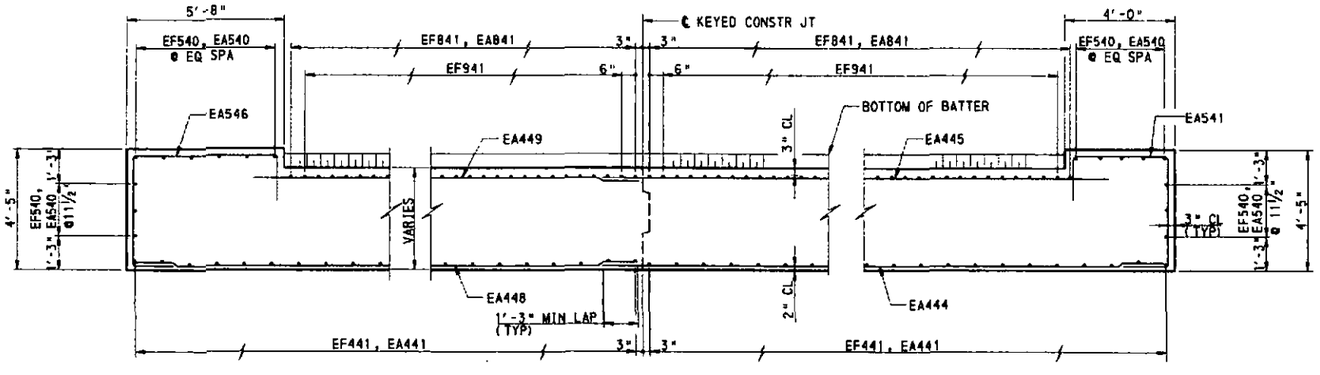

SECTION B-B

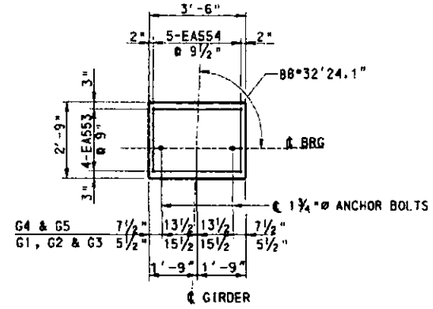

PEDESTAL DETAIL
NTS

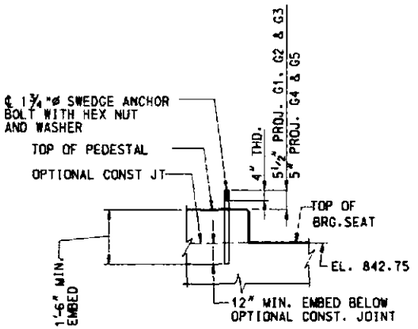

ANCHOR BOLT DETAIL
NTS

NOTE
*FOR LOCATION OF SECTIONS, GIRDERS, ADDITIONAL NOTES AND LEGEND SEE SHEET 24

Mark	Description	By	Chk'd.	Recm'd.	Date
REVISIONS					

DESIGNED BY	BGC
DRAWN BY	ERK
CHECKED BY	MP

3' 2' 1' 0' 3'
UNLESS NOTED

COMMONWEALTH OF PENNSYLVANIA
DEPARTMENT OF TRANSPORTATION

ARMSTRONG COUNTY
SR 1038 SECTION 150

SEG 0040 OFFSET 1110
SR 1038-150 STA 1956+35.83 AND SR 4025 OVER BUFFALO AND PITTSBURGH RAILROAD
4 SPAN STEEL MULTI-GIRDER BRIDGE AND SINGLE SPAN ROLLED BEAM T-SPAN
ABUTMENT 2 SECTIONS

RECOMMENDED _____ 2007

SHEET 26 OF 97

S-27038

A-00122496

KEITH A. MICHAEL ENGINEER

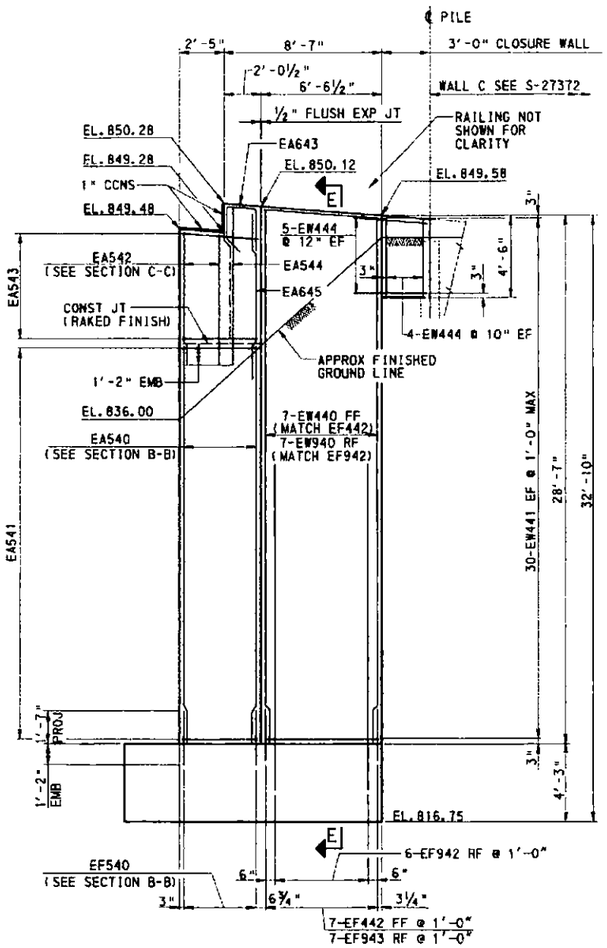

ELEVATION WING C

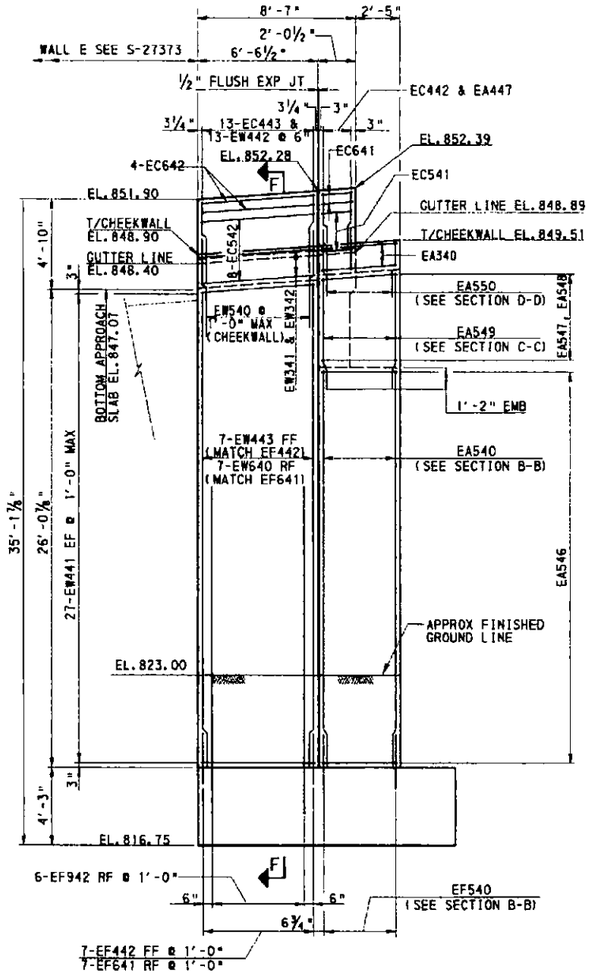

ELEVATION WING E

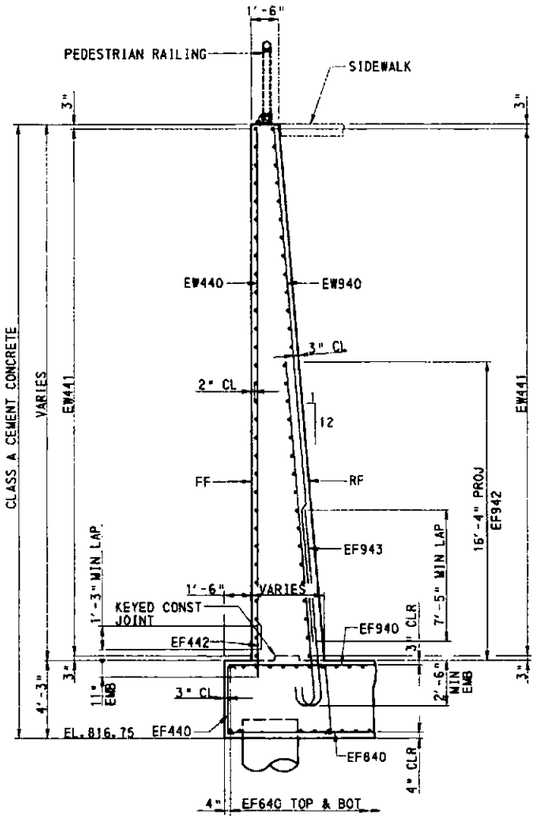

SECTION E-E

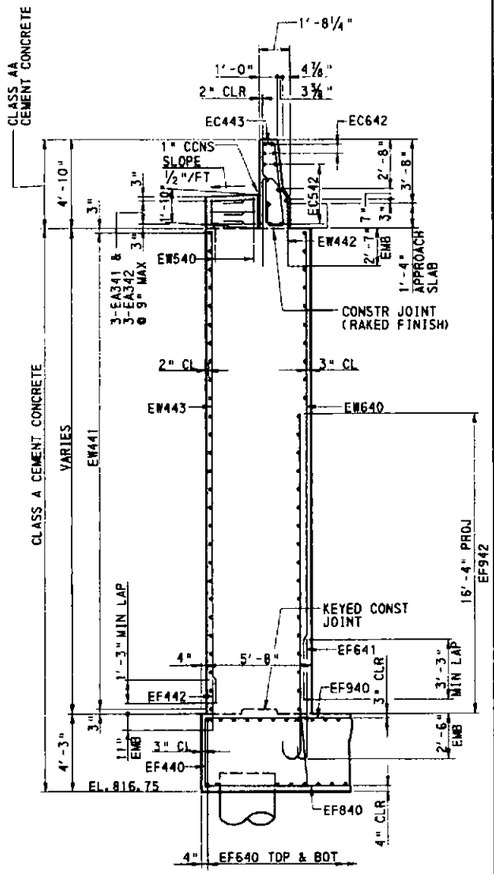

SECTION F-F

Mark	Description	By	Chk'd.	Recm'd.	Date

REVISIONS

4' 2' 0' 4'
SCALE: ¼" = 1'-0" UNLESS NOTED

COMMONWEALTH OF PENNSYLVANIA
DEPARTMENT OF TRANSPORTATION

ARMSTRONG COUNTY
SR 1038 SECTION 150
SEG 0040 OFFSET 1110
SR 1038-150 STA 1956+35.83 AND SR 4025 OVER
BUFFALO AND PITTSBURGH RAILROAD
4 SPAN STEEL MULTI-GIRDER BRIDGE AND
SINGLE SPAN ROLLED BEAM T-SPAN
ABUTMENT 2 WING DETAILS

DESIGNED BY	BGC
DRAWN BY	ERK
CHECKED BY	MP

NOTE:
- FOR NOTES AND LEGEND SEE SHEET 24
- FOR CAISSON SPACING AND DETAILS SEE FOOTING PLAN SHEET 25

KEITH A. MICHAEL

RECOMMENDED _____ JUL 8 2007

SHEET 27 OF 97
S-27038

h:\projects\0512\eab\structure_drawings\abutments\wings.dgn 7/3/2007

A-00122496

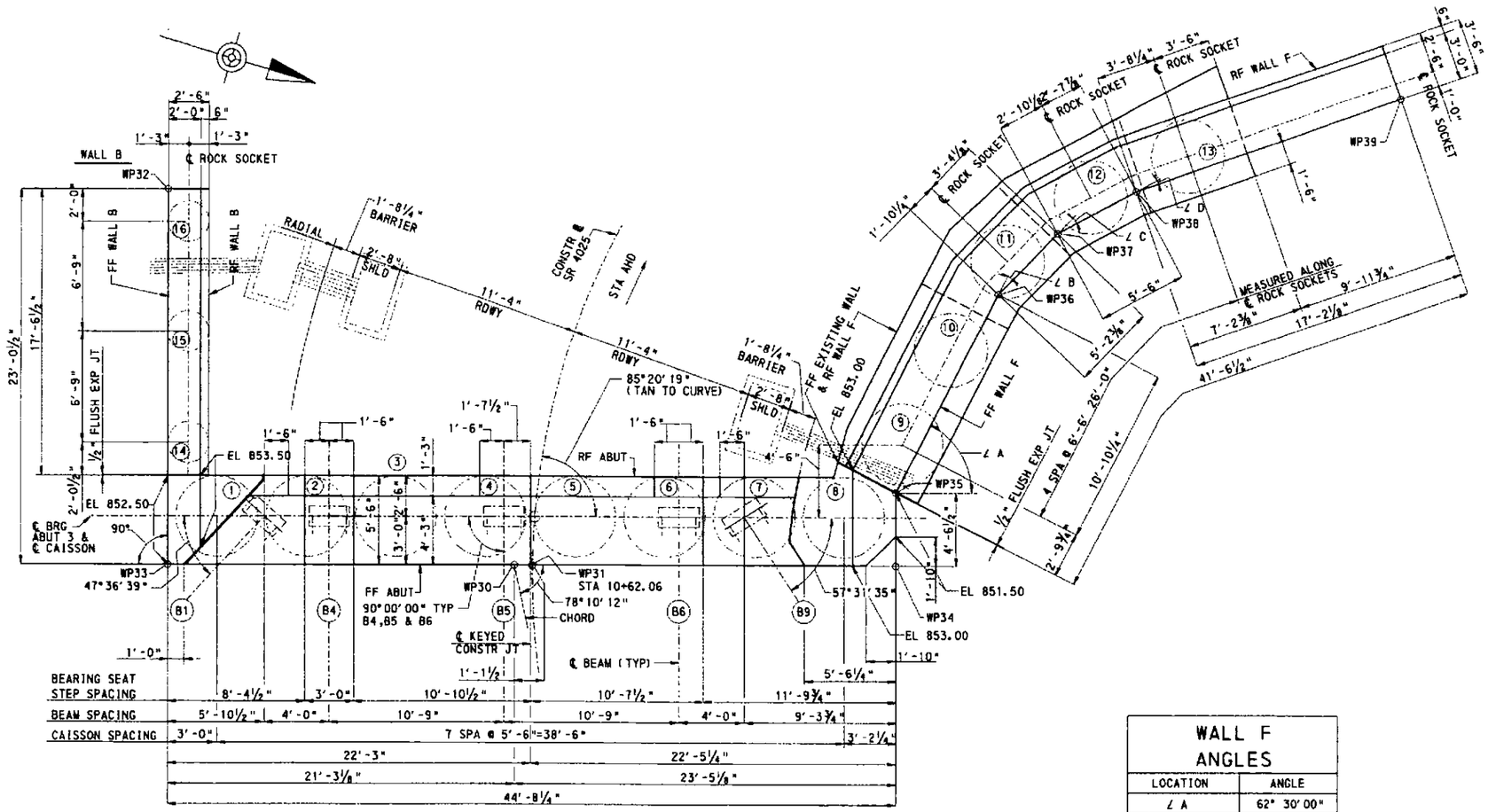

PLAN

WALL F ANGLES	
LOCATION	ANGLE
∠ A	62° 30' 00"
∠ B	16° 30' 00"
∠ C	18° 00' 00"
∠ D	9° 00' 00"

NOTE:
DIMENSIONS SHOWN FOR WALL F ARE MEASURED ALONG FRONT FACE OF WALL UNLESS NOTED.

TANGENT CAISSON SEQUENCE OF CONSTRUCTION

- INSTALL CAISSONS BY DRILLING EVERY OTHER CAISSON AND PLACING CONCRETE IN ACCORDANCE WITH SECTION 1006 AND THE SPECIAL PROVISIONS.
- DO NOT DRILL ANY CAISSON THAT IS WITHIN 3-DIAMETERS OF A CAISSON IN WHICH CONCRETE HAS BEEN PLACED IN THE LAST 24 HOURS
- DRILL THE "IN-BETWEEN" CAISSONS, PROVIDED THAT THE CONCRETE IN THE IMMEDIATE ADJACENT CAISSONS IS AT LEAST 3 DAYS OLD (FROM COMPLETION OF PLACEMENT) AND THAT THE CONCRETE IN ANY CAISSON WITHIN 3-DIAMETERS OF THE PROPOSED CAISSON IS AT LEAST 24 HOURS OLD.
- PLACE CONCRETE IN CAISSONS IN ACCORDANCE WITH SECTION 1006 AND THE SPECIAL PROVISIONS.

NOTES:

- FOR GENERAL NOTES SEE SHEETS 5 AND 6
- FOR STAKE OUT PLAN SEE SHEET 7.
- FOR BEARING DETAILS SEE SHEETS 57 THRU 62.
- FOR ABUTMENT ELEVATION SEE SHEET 29.
- FOR WING ELEVATION SEE SHEET 30.
- FOR DRAINAGE DETAILS SEE SHEET 80.
- FOR KEYED CONST JT DETAILS SEE STANDARD DRAWING BC-735M
- FOR ADDITIONAL WATERPROOFING DETAILS SEE STANDARD DRAWING BC-788M

LEGEND:

FF FRONT FACE
RF REAR FACE
WP WORK POINT
(B1) BEAM NUMBER
(1) CAISSON/ROCK SOCKET NUMBER

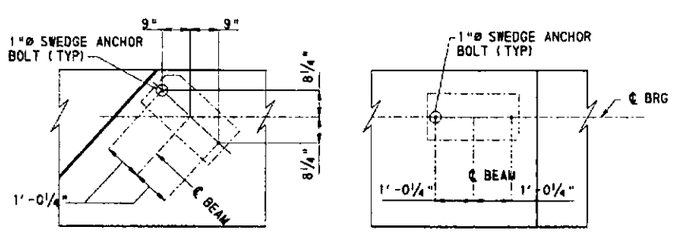

BEAM B1 | BEAMS B4,B5 & B6 | BEAM B9

NOTE: FOR BEAM ANGLES SEE PLAN

ANCHOR BOLT PLAN

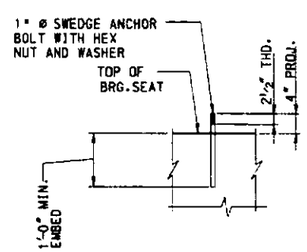

ANCHOR BOLT DETAIL
NTS

Mark	Description	By	Chk'd.	Recm'd.	Date
REVISIONS					

COMMONWEALTH OF PENNSYLVANIA
DEPARTMENT OF TRANSPORTATION

ARMSTRONG COUNTY
SR 1038 SECTION 150
SEG 0040 OFFSET 1110
SR 1038-150 STA 1956+35.83 AND SR 4025 OVER
BUFFALO AND PITTSBURGH RAILROAD
4 SPAN STEEL MULTI-GIRDER BRIDGE AND
SINGLE SPAN ROLLED BEAM T-SPAN
ABUTMENT 3 PLAN

COMMONWEALTH OF PENNSYLVANIA DEPARTMENT OF TRANSPORTATION PROFESSIONAL KEITH A. MICHAEL ENGINEER

DESIGNED BY	JPL
DRAWN BY	RLG
CHECKED BY	MP

RECOMMENDED _____

SHEET 28 OF 97

S-27038

A-00122496

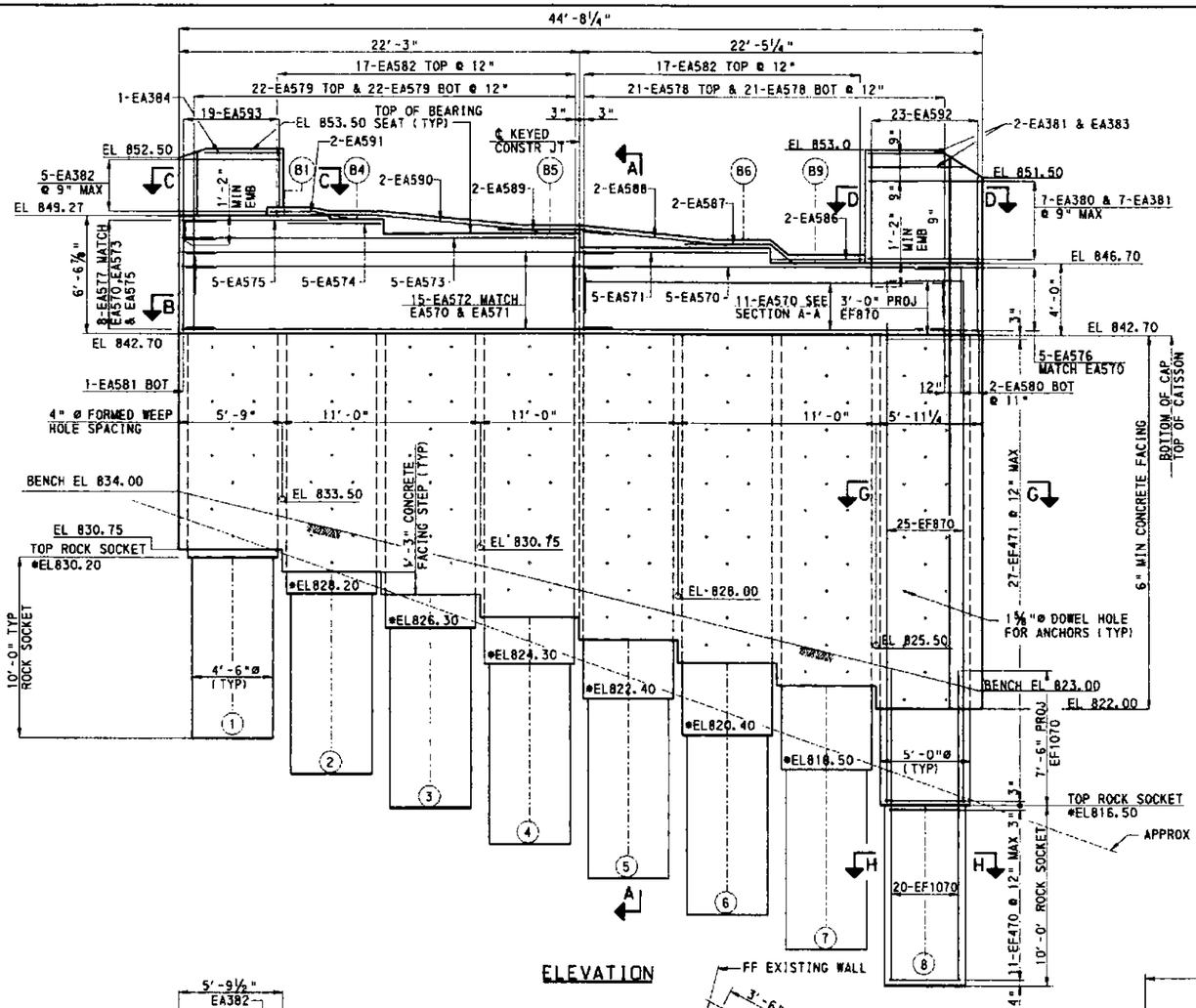

ELEVATION

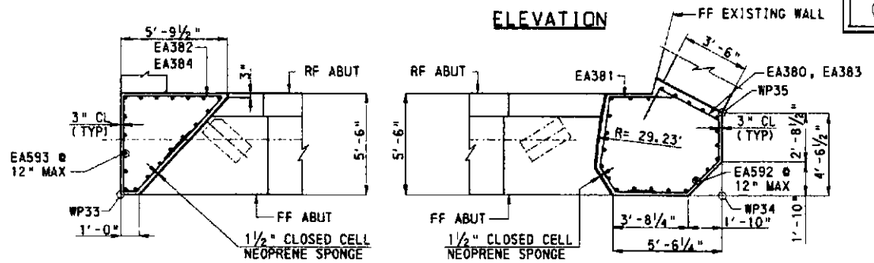

SECTION C-C

SECTION D-D

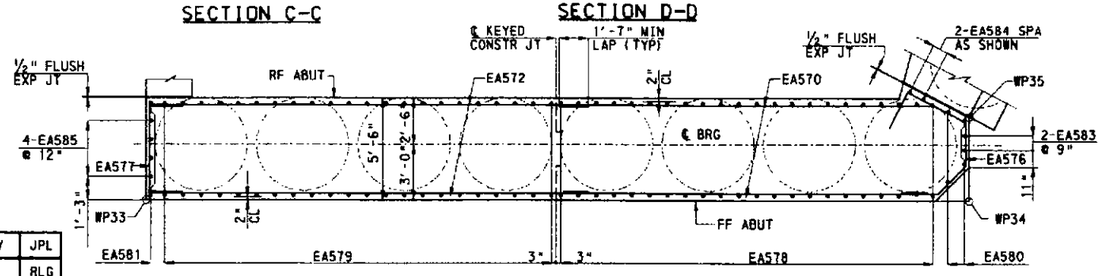

SECTION B-B

TOP BEAM SEAT ELEVATIONS	
BEAM No.	ELEVATION
B1	849.27
B4	849.13
B5	848.31
B6	847.54
B9	846.70

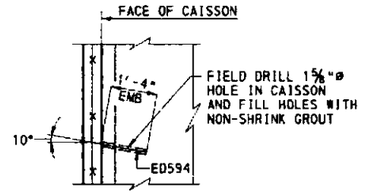

ANCHOR DETAIL
NTS

NOTE: FOR ANCHOR SPACING AND LAYOUT SEE SHEET 30.

NOTE
- ALL REINFORCEMENT IN CAISSONS AND ROCK SOCKETS IS EPOXY COATED AND IS INCIDENTAL TO EACH.
- FOR GENERAL NOTES SEE SHEETS 5 AND 6.
- FOR STAKE OUT PLAN SEE SHEET 7.
- FOR ABUTMENT PLAN SHEET 28.
- FOR WALLS B AND F DETAILS SEE SHEET 30.
- FOR SECTIONS E-E AND F-F SEE SHEET 31.
- FOR REINFORCEMENT BAR SCHEDULE SEE SHEET 86.
- CAISSON LOADS:
  MAXIMUM FACTORED AXIAL LOAD = 139 TONS (STR-1)
  MAXIMUM FACTORED AXIAL RESISTANCE = 165 TONS

LEGEND:
FF FRONT FACE
RF REAR FACE
WP WORK POINT
* TOP OF ROCK SOCKET ELEVATION
(1) CAISSON/ROCK SOCKET NUMBER

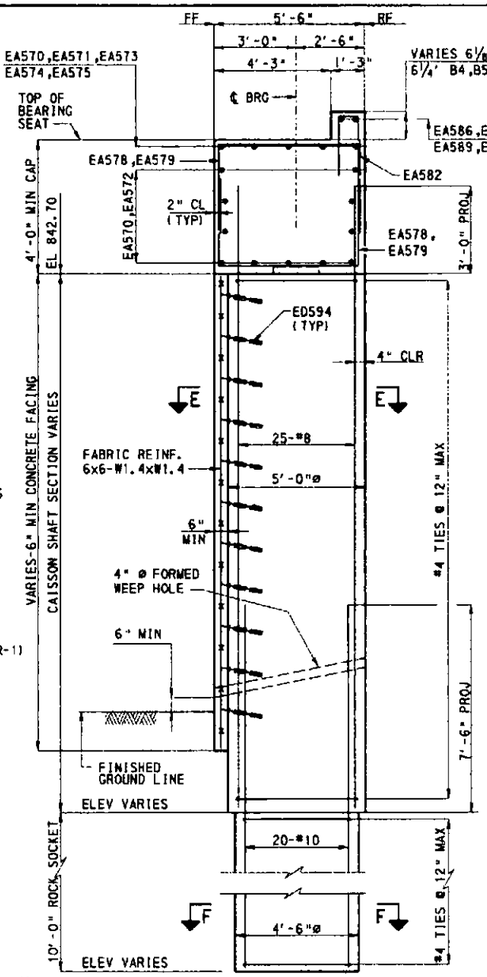

NOTE: CAISSON REINFORCEMENT SHOWN IN SECTION A-A IS TYPICAL FOR CAISSONS 1 THRU 7

SECTION A-A
3' 2' 1' 0' 3'

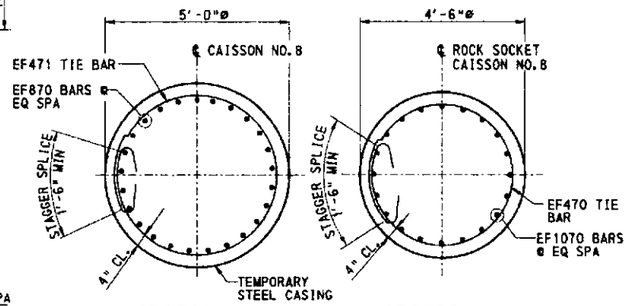

SECTION G-G
2' 1' 0' 2'

SECTION H-H
2' 1' 0' 2'

4' 2' 0' 4'
UNLESS NOTED

Mark	Description	By	Chk'd.	Recm'd.	Date
REVISIONS					

DESIGNED BY	JPL
DRAWN BY	RLG
CHECKED BY	MP

COMMONWEALTH OF PENNSYLVANIA
DEPARTMENT OF TRANSPORTATION

ARMSTRONG COUNTY
SR 1038 SECTION 150

SEG 0040 OFFSET 1110
SR 1038-150 STA 1956+35.83 AND SR 4025 OVER BUFFALO AND PITTSBURGH RAILROAD
4 SPAN STEEL MULTI-GIRDER BRIDGE AND SINGLE SPAN ROLLED BEAM T-SPAN

ABUTMENT 3 ELEVATION

COMMONWEALTH OF PENNSYLVANIA REGISTERED PROFESSIONAL KEITH A. MICHAEL Engineer

RECOMMENDED _____

SHEET 29 OF 97

S-27038

A-00122496

h:\projects\04432\structure\rev_kittanning\final\abut3elevd.dgn 7/31/2007

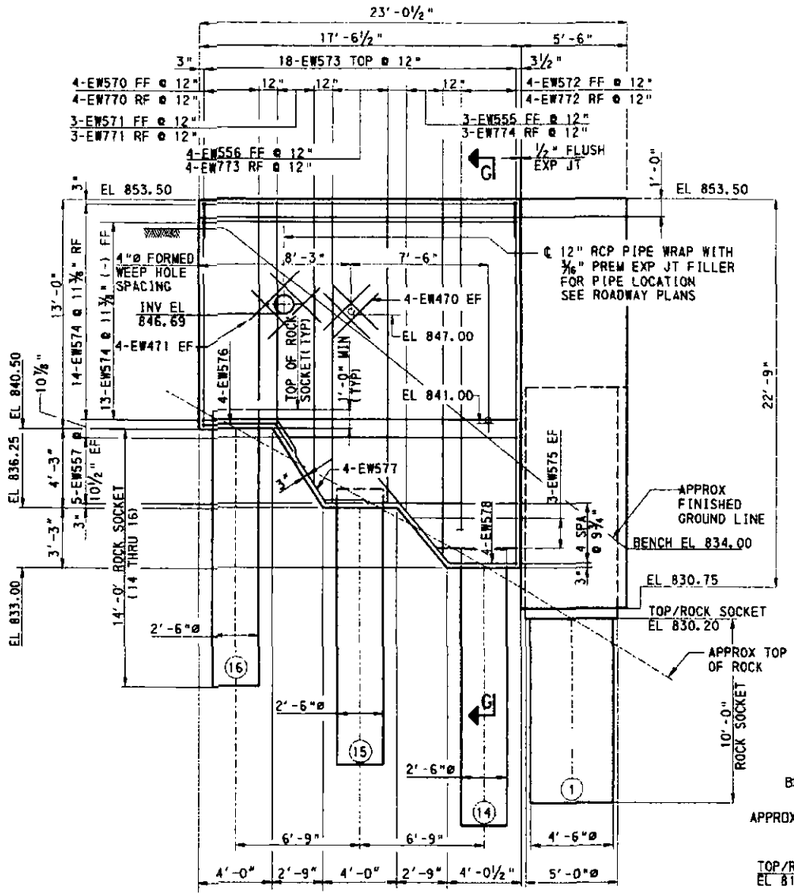

WALL B

DOWEL HOLE/ANCHOR SPACING

NOTE: SEE PLAN VIEW DOWEL HOLE/ANCHOR LOCATION FOR ADDITIONAL DOWELS IN CORNER LOCATIONS

CONTINUE ALTERNATING PATTERN ON REMAINDER OF CAISSONS

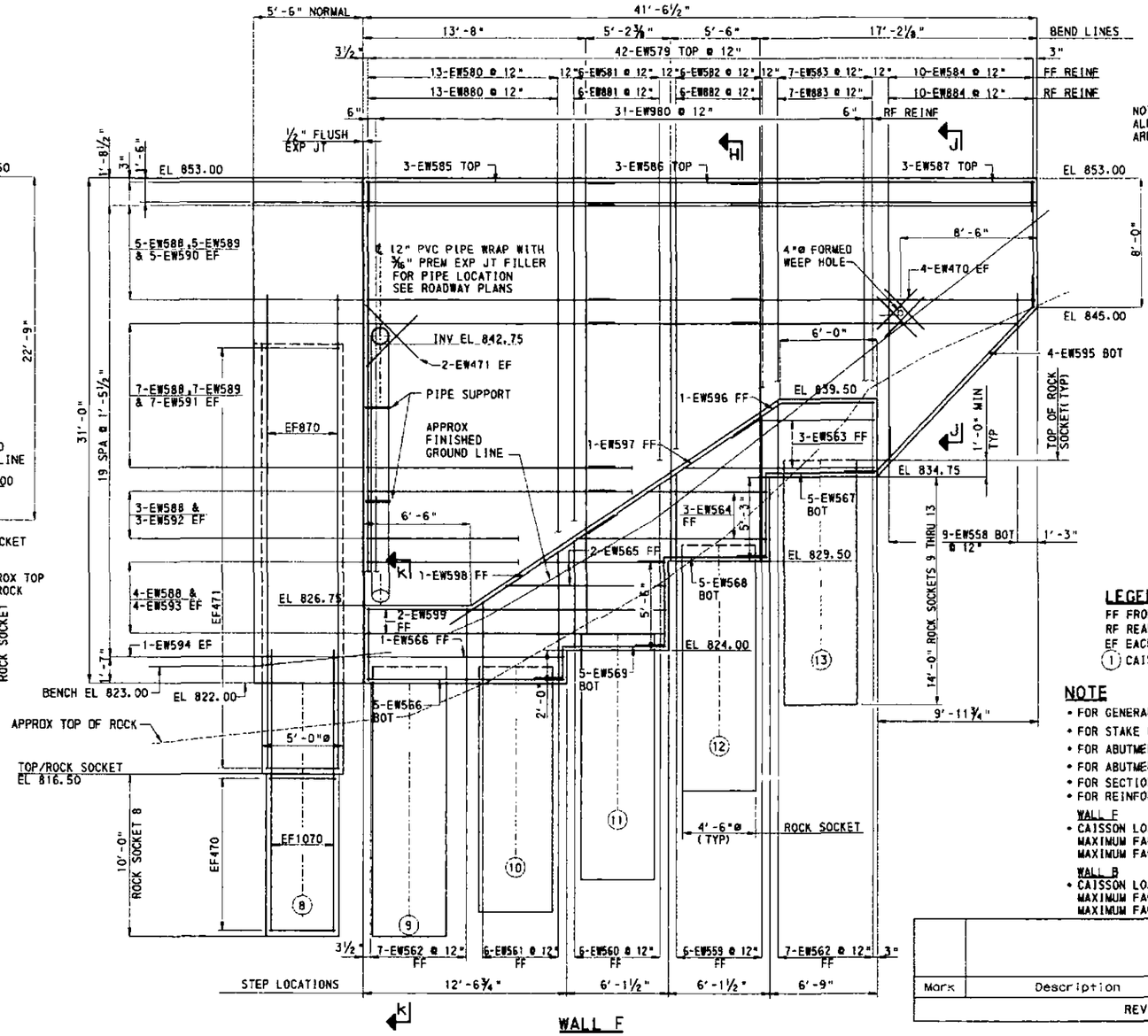

WALL F

NOTE :
ALL DIMENSIONS SHOWN FOR WALL F ARE ALONG FRONT FACE OF WALL.

LEGEND:
FF FRONT FACE
RF REAR FACE
EF EACH FACE
(1) CAISSON/ROCK SOCKET NUMBER

NOTE
- FOR GENERAL NOTES SEE SHEETS 5 AND 6.
- FOR STAKE OUT PLAN SEE SHEET 7.
- FOR ABUTMENT PLAN SEE SHEET 28.
- FOR ABUTMENT ELEVATION SEE SHEET 29.
- FOR SECTIONS G-G, H-H AND J-J SEE SHEET 31.
- FOR REINFORCEMENT BAR SCHEDULE SEE SHEET 86.

WALL F
- CAISSON LOADS:
  MAXIMUM FACTORED AXIAL LOAD = 95 TONS
  MAXIMUM FACTORED AXIAL RESISTANCE = 330 TONS

WALL B
- CAISSON LOADS:
  MAXIMUM FACTORED AXIAL LOAD = 28 TONS
  MAXIMUM FACTORED AXIAL RESISTANCE = 280 TONS

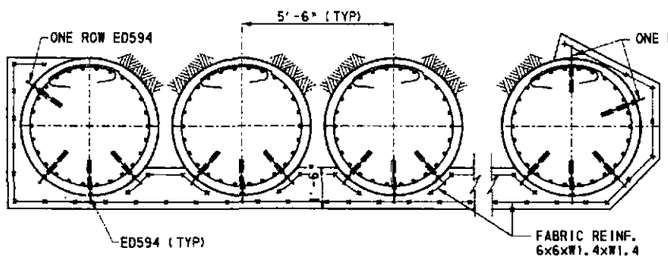

PLAN VIEW DOWEL HOLE/ANCHOR LOCATION

3' 2' 1' 0' 3'

4' 2' 0' 4'
UNLESS NOTED

Mark	Description	By	Chk'd.	Recm'd.	Date
REVISIONS					

DESIGNED BY	JPL
DRAWN BY	RLG
CHECKED BY	MP

COMMONWEALTH OF PENNSYLVANIA
DEPARTMENT OF TRANSPORTATION

ARMSTRONG COUNTY
SR 1038 SECTION 150

SEG 0040 OFFSET 1110
SR 1038-150 STA 1956+35.83 AND SR 4025 OVER BUFFALO AND PITTSBURGH RAILROAD
4 SPAN STEEL MULTI-GIRDER BRIDGE AND SINGLE SPAN ROLLED BEAM T-SPAN
ABUTMENT 3 WALLS

COMMONWEALTH OF PENNSYLVANIA REGISTERED PROFESSIONAL KEITH A MICHAEL ENGINEER PENNSYLVANIA

RECOMMENDED _____

SHEET 30 OF 97

S-27038

A-00122496

h:\dgn\pj\ed5a4dc432ed4fdd9ur6ww.k?*fdn\hgwr1hd14d6u33w8!ed.dgn 7/31/2007

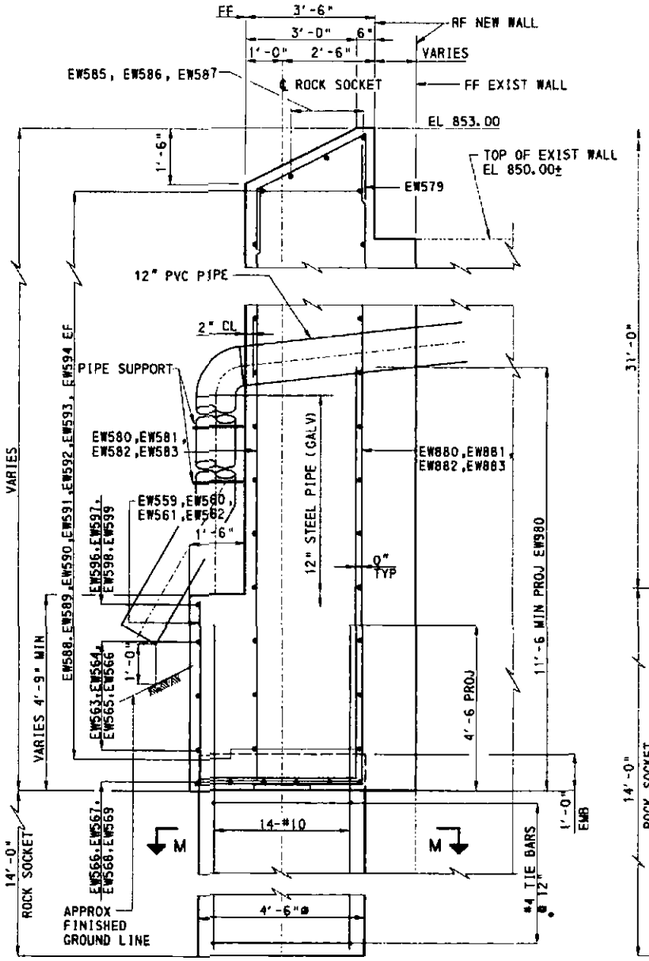

SECTION H-H
WALL F

NOTE: FOR ADDITIONAL INFORMATION NOT SHOWN SEE SECTION H-H

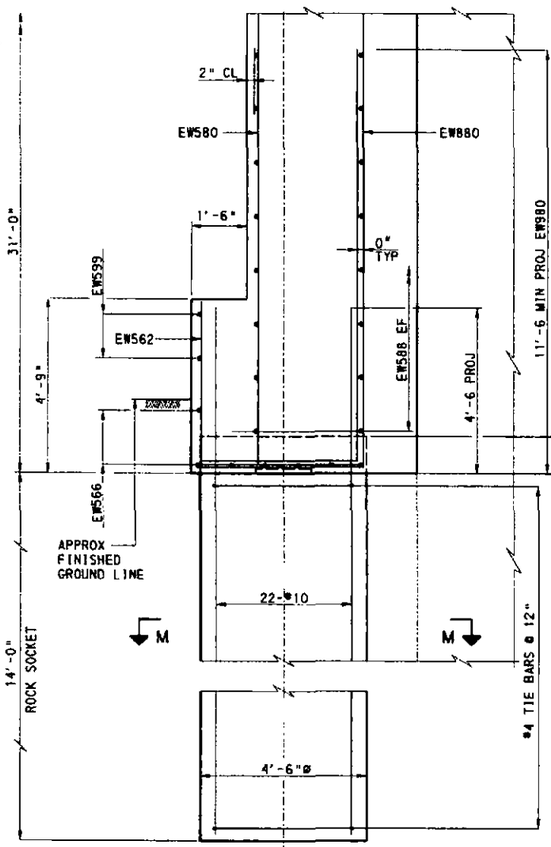

SECTION K-K
WALL F

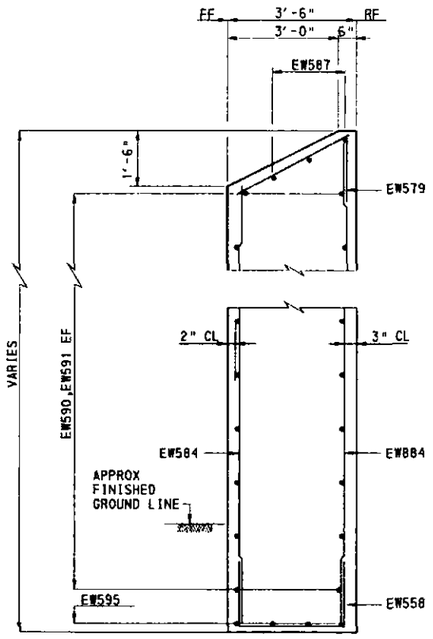

SECTION J-J
WALL F

NOTE

- ALL REINFORCEMENT IN CAISSONS AND ROCK SOCKETS IS EPOXY COATED AND IS INCIDENTAL TO EACH.
- FOR GENERAL NOTES SEE SHEETS 5 AND 6.
- FOR LOCATION OF SECTIONS E-E AND F-F SEE SHEET 29.
- FOR LOCATION OF SECTIONS G-G,H-H, J-J,K-K AND ADDITIONAL NOTES SEE SHEET 30.

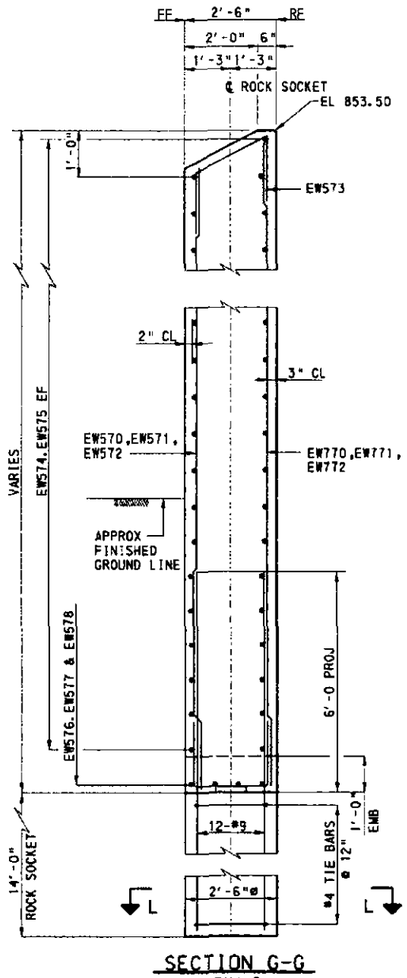

SECTION G-G
WALL B

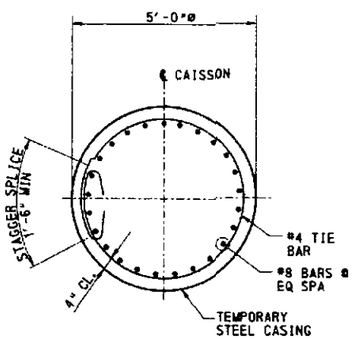

SECTION E-E
NOTE: CONCRETE FACING NOT SHOWN

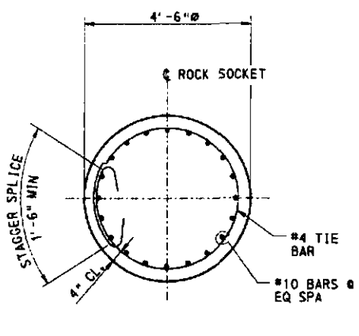

SECTION F-F

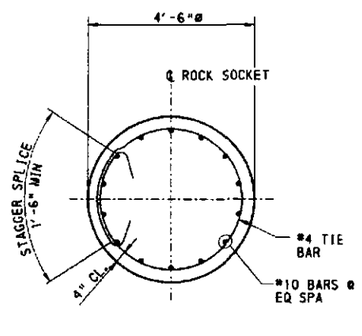

SECTION M-M

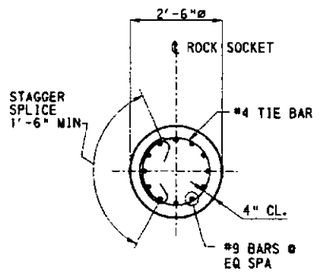

SECTION L-L

NOTE: EXISTING WALL NOT SHOWN IN SECTIONS M-M & N-N

DESIGNED BY	JPL
DRAWN BY	RLG
CHECKED BY	MP

Mark	Description	By	Chk'd.	Recm'd.	Date
REVISIONS					

COMMONWEALTH OF PENNSYLVANIA
DEPARTMENT OF TRANSPORTATION

ARMSTRONG COUNTY
SR 1038 SECTION 150

SEG 0040 OFFSET 1110
SR 1038-150 STA 1956+35.83 AND SR 4025 OVER BUFFALO AND PITTSBURGH RAILROAD

4 SPAN STEEL MULTI-GIRDER BRIDGE AND SINGLE SPAN ROLLED BEAM T-SPAN ABUTMENT 3 SECTIONS

RECOMMENDED _____ 2007

SHEET 31 OF 97

S-27038

A-00122496

COMMONWEALTH OF PENNSYLVANIA
PROFESSIONAL
KEITH A. MICHAEL
ENGINEER

2' 1' 0' 2'

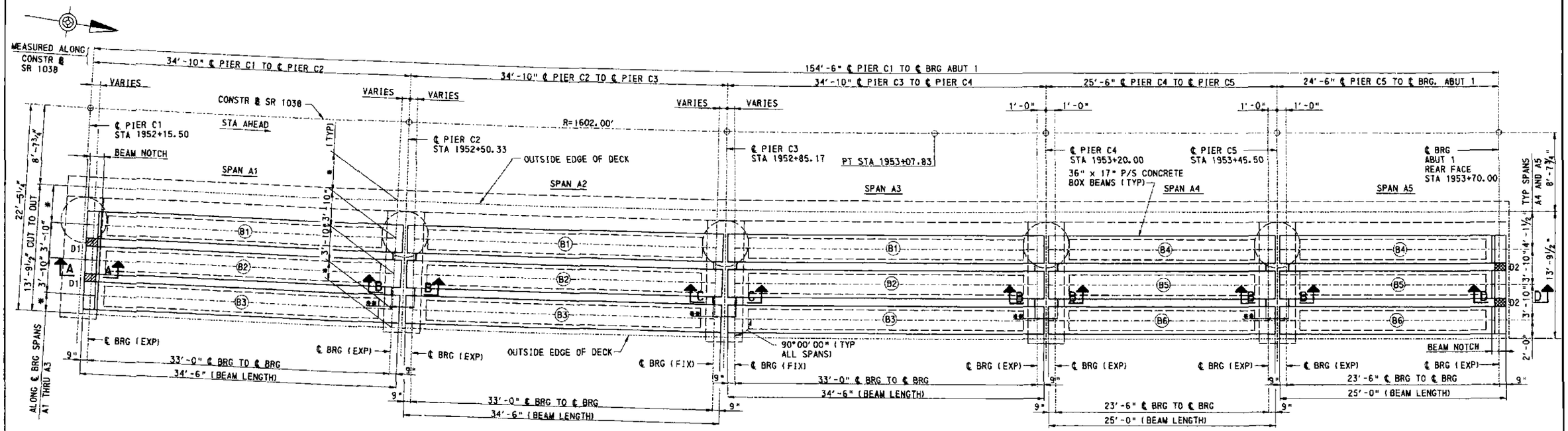

FRAMING PLAN

4' 0' 4'

OVERHANG DIMENSIONS			
LOCATION	SPAN NO.	LEFT FASCIA	RIGHT FASCIA
PIER C1	A1	4'-1⅜"	2'-0⅛"
PIER C2	A1	4'-1⅜"	2'-0⅛"
	A2	4'-1⅜"	2'-0⅛"
PIER C3	A2	4'-1⅜"	2'-0⅛"
	A3	4'-1⅜"	2'-0⅛"
PIER C4	A3	4'-1½"	2'-0"

FUTURE JACKING LOADS (KIPS)			
LOCATION	LIVE LOAD	DEAD LOAD	TOTAL
PIERS	21.2	33.7	54.9
ABUTMENT 1	35.7	22.7	58.4

NOTE: DEAD LOAD REACTION = 1.3 x PERMANENT DEAD LOAD REACTION
LIVE LOAD REACTION = 1.0 x PHL-93 REACTION

LEGEND

(B1) DENOTES BEAM NUMBER

* OVERHANG VARIES SEE TABLE

** 2'-6" CONTINUITY DIAPHRAGM CD1 PIERS C2, C4 & C5
3'-6" CONTINUITY DIAPHRAGM CD2 PIER C3

DENOTES FULL DEPTH END DIAPHRAGM D1

DENOTES FULL DEPTH END DIAPHRAGM D2

NOTES

- FOR GENERAL NOTES SEE SHEETS 5 AND 6.
- FOR BOX BEAM REINFORCEMENT DETAILS SEE SHEET 33.
- FOR BOX BEAM FABRICATION DETAILS SEE SHEET 34.
- FOR DIAPHRAGM DETAILS, SECTIONS A-A, B-B, C-C AND D-D SEE SHEET 37.
- ALL BEAM LENGTHS AND SPACINGS ARE MEASURED ALONG TOP OF BEAM.

Mark	Description	By	Chk'd.	Recm'd.	Date
REVISIONS					

DESIGNED BY	RES
DRAWN BY	RLG
CHECKED BY	PAM

COMMONWEALTH OF PENNSYLVANIA
DEPARTMENT OF TRANSPORTATION

ARMSTRONG COUNTY
SR 1038 SECTION 150
SEG 0040 OFFSET 1110
SR 1038-150 STA 1956+35.83 AND SR 4025 OVER
BUFFALO AND PITTSBURGH RAILROAD
4 SPAN STEEL MULTI-GIRDER BRIDGE AND
SINGLE SPAN ROLLED BEAM T-SPAN
FRAMING PLAN WINGWALL A

REGISTERED PROFESSIONAL KEITH A MICHAEL ENGINEER COMMONWEALTH OF PENNSYLVANIA

RECOMMENDED _____ 6 2007

SHEET 32 OF 97

S-27038

A-00122496

7/3/2007

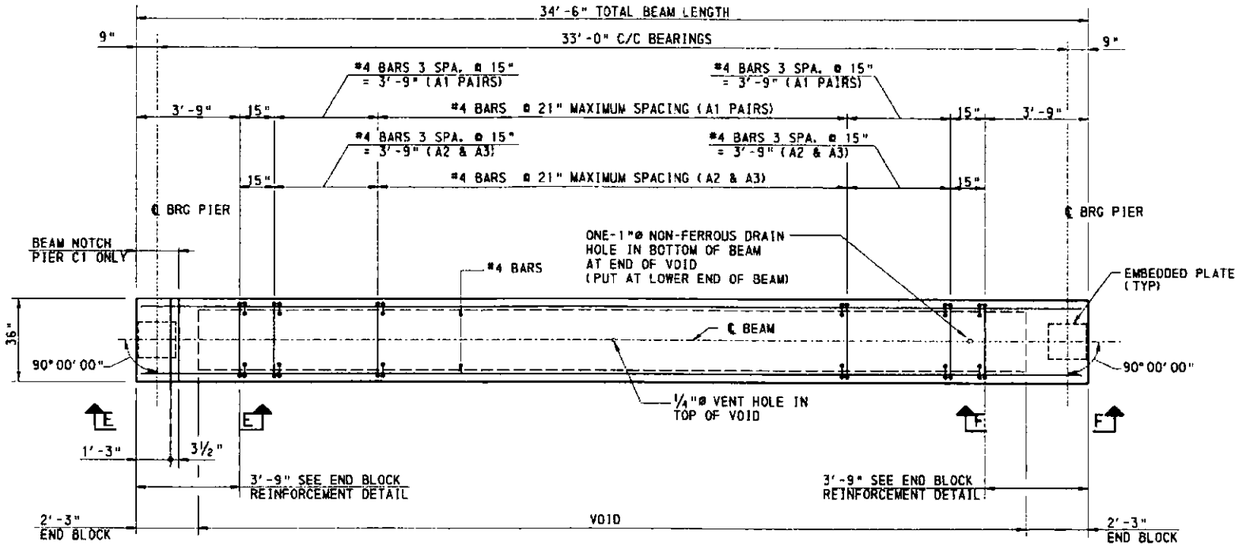

TYPICAL BEAM PLAN SPANS A1 THRU A3

BEAMS B1, B2 & B3

3' 2' 1' 0' 3'

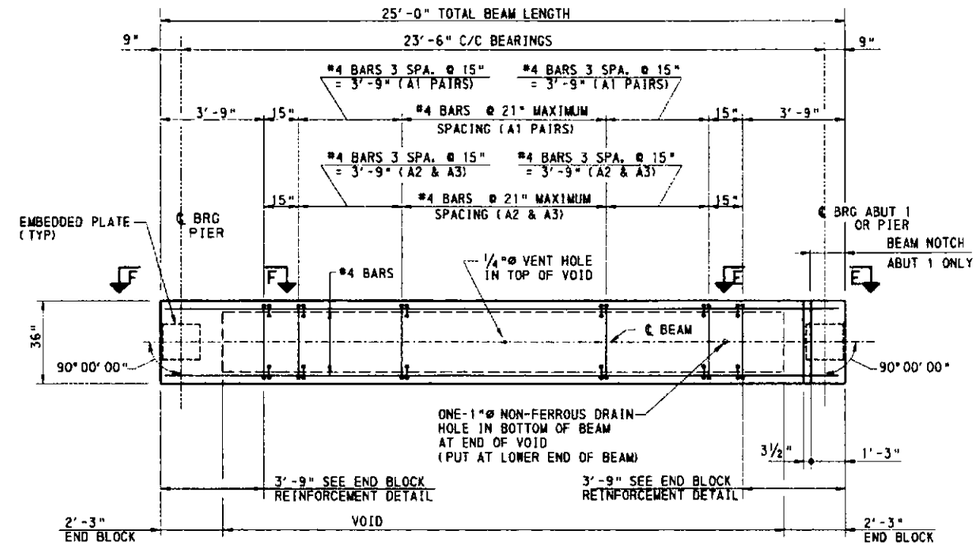

TYPICAL BEAM PLAN SPANS A4 & A5

BEAMS B4, B5 & B6

3' 2' 1' 0' 3'

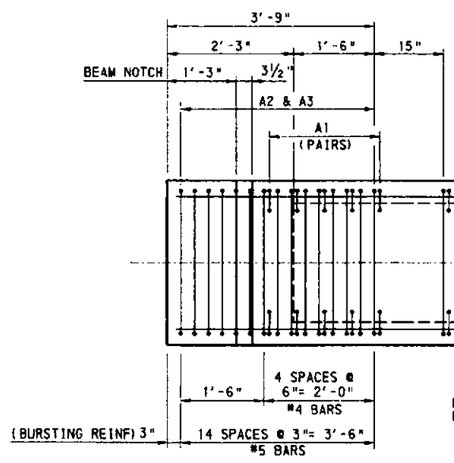

END BLOCK REINFORCEMENT DETAIL WITH BEAM NOTCH (ABUTMENT 1 OR PIER C1 END)

BEAMS B1,B2 & B3 SHOWN (PIER C1)
BEAMS B4,B5 & B6 OPP.HAND (ABUTMENT 1)

NOTE: EMBEDDED PL NOT SHOWN

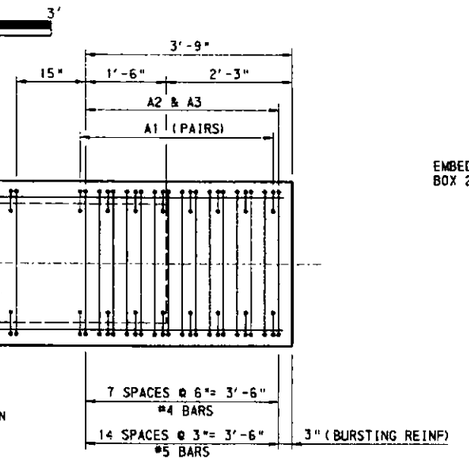

END BLOCK REINFORCEMENT DETAIL WITHOUT BEAM NOTCH (PIER ENDS)

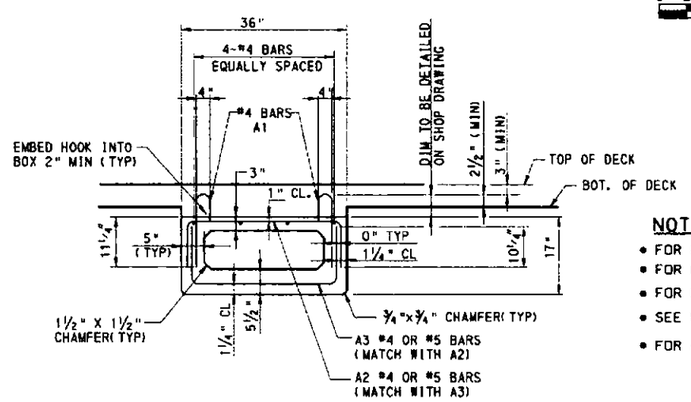

TYPICAL BEAM SECTION

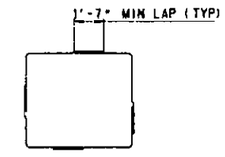

ALTERNATE END BLOCK REINFORCEMENT SPLICING DETAIL

NTS

NOTES:

- FOR GENERAL NOTES SEE SHEETS 5 AND 6.
- FOR BEAM LOCATIONS SEE SHEET 32.
- FOR CAMBER DIAGRAM, PRESTRESS DATA AND PRESTRESS NOTES SEE SHEET 34.
- SEE BEARING DETAILS SHEETS 35 AND 36 FOR EMBEDDED PLATE DETAILS
- FOR ADDITIONAL PRESTRESS BEAM DETAILS SEE STANDARD DRAWING BC-775M.

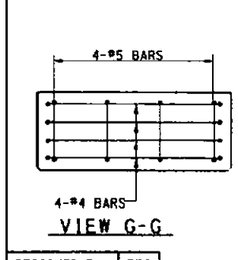

VIEW G-G

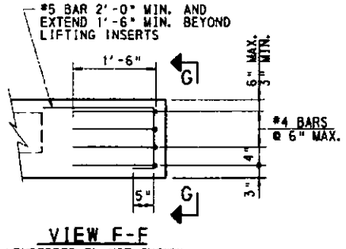

VIEW F-F

(EMBEDDED PL NOT SHOWN)

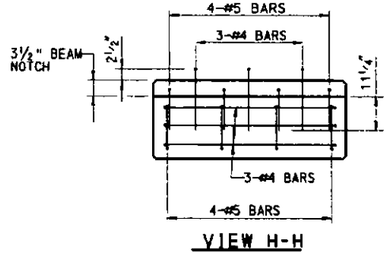

VIEW H-H

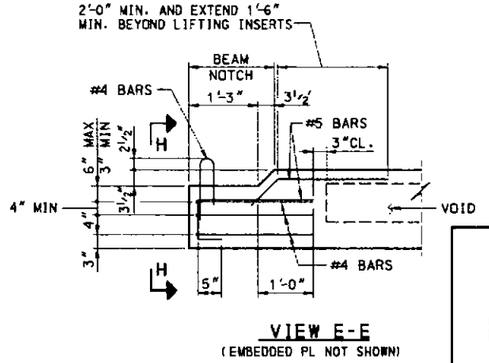

VIEW E-E

(EMBEDDED PL NOT SHOWN)

DESIGNED BY	RES
DRAWN BY	RLG
CHECKED BY	PAM

2' 1' 0' 2'

SCALE UNLESS NOTED

Mark	Description	By	Chk'd.	Recm'd.	Date
REVISIONS					

COMMONWEALTH OF PENNSYLVANIA
DEPARTMENT OF TRANSPORTATION

ARMSTRONG COUNTY
SR 1038 SECTION 150

SEG 0040 OFFSET 1110
SR 1038-150 STA 1956+35.83 AND SR 4025 OVER BUFFALO AND PITTSBURGH RAILROAD
4 SPAN STEEL MULTI-GIRDER BRIDGE AND SINGLE SPAN ROLLED BEAM T-SPAN

BOX BEAM REINFORCEMENT DETAILS

COMMONWEALTH OF PENNSYLVANIA PROFESSIONAL KEITH A. MICHAEL ENGINEER

RECOMMENDED _____ JUL 8 2007

SHEET 33 OF 97

S-27038

A-00122496

h:\projects\0432\structure_xrf\fon\%d%f%n%t%e.dgn 7/27/2007

BOX BEAM PRESTRESS NOTES

- SHOW THE FOLLOWING DATA ON THE SHOP DRAWINGS:
  1. DESIGN LENGTH AND CASTING LENGTH OF BEAMS.
  2. PLAN, ELEVATION, SECTIONS AND ALL REINFORCEMENT DETAILS.
  3. ANY MODIFICATIONS TO REINFORCEMENT SPLICE AND BENDING DETAILS.
  4. SIZE AND LOCATION OF THE TEMPORARY STORAGE SUPPORTS.
  5. TYPE AND LOCATION OF THE BRACING AND TEMPORARY SUPPORTS USED FOR THE TRANSPORTATION AND ERECTION OF THE BEAMS.
- PROVIDE A HEAVY SCORED FINISH ON TOP OF THE BOX BEAMS.
- MINIMUM COVER ON REINFORCEMENT BARS:
  TOP SLAB 1"
  SIDE WALLS 1¼"
  BOTTOM SLAB 1¼"
  ELSEWHERE 2" UNLESS OTHERWISE NOTED
- END ZONE REINFORCEMENT MAY BE INCREASED BY FABRICATOR TO REFLECT FABRICATOR'S EXPERIENCE AND/OR TO CONTROL CRACKING. WIRE MESH OF EQUIVALENT AREA IS PERMISSIBLE FOR CRACK CONTROL REINFORCEMENT.
- USE EPOXY COATED REINFORCEMENT BARS FOR BARS PROJECTING INTO THE DECK SLAB AND ALL REINFORCEMENT BARS FOR A DISTANCE OF 9'-0" FROM BEAM ENDS AT EXPANSION JOINTS.
- PROVIDE THREADED INSERTS FOR DIAPHRAGMS. MINIMUM LENGTH 3", USE SAME SIZE INSERTS FOR PLAIN BARS, AND ONE SIZE SMALLER INSERT FOR DEFORMED BARS.
- PROVIDE A ¼" DIAMETER VENT HOLE AT THE TOP OF EACH VOID IN THE BEAMS.
- PROVIDE ONE 1" DIAMETER NON-FERROUS DRAIN HOLE IN THE BOTTOM, AT EACH END OF EACH VOID IN THE BEAMS, EXCEPT AS NOTED.
- USE STYROFOAM MEETING ASTM C-578, TYPE 1, MATERIAL REQUIREMENTS EXCEPT THE MAXIMUM ALLOWABLE WATER ABSORPTION SHALL BE 2%. SUPPLIERS ARE LISTED IN BULLETIN 15 UNDER SECTION 1107.02(K), BOX BEAM VOID FORM.
- FOR ADDITIONAL PRESTRESS NOTES AND DETAILS SEE STANDARD DRAWING BC-775M.
- FABRICATOR TO CHECK STABILITY FOR HANDLING AND TRANSPORTING OF THE MEMBERS.
- ALL LENGTHS SHOWN ARE HORIZONTAL, ADJUST LENGTHS FOR BEAM SLOPE PRIOR TO BEAM FABRICATION.
- PRESTRESS BEAM REINFORCEMENT AND DETAILS SHALL CONFORM TO LATEST PENNDOT REQUIREMENTS.

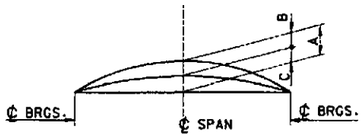

CAMBER DIAGRAM
NOT TO SCALE

CAMBER TABLE (INCHES)				
	BEAM NUMBER	A	B	C
SPAN A1 THRU A3	①	0.91	0.25	0.66
	②	0.91	0.25	0.66
	③	0.91	0.25	0.66
SPAN A4 THRU A5	④	0.43	0.07	0.36
	⑤	0.43	0.07	0.36
	⑥	0.43	0.07	0.36

CAMBER NOTES

A = ESTIMATED PRESTRESS CAMBER LESS DEFLECTION DUE TO DEAD LOAD OF BEAM TIMES CREEP FACTOR. (CHECK IN FIELD)

B = DEFLECTION DUE TO DEAD LOAD OF THE SLAB, HAUNCHES, PERMANENT METAL DECK FORMS AND BARRIERS.

C = A-B = (NET FINAL CAMBER)

- VARY THE THICKNESS OF THE CONCRETE HAUNCH TO COMPENSATE FOR ANY INACCURACIES IN BEAM CAMBER.
- A, B AND C ARE THEORETICAL VALUES AND MAY VARY WITH ACTUAL CONCRETE STRENGTH (AGE), VARIOUS PRESTRESSING CONDITIONS, CREEP FACTOR AND PRESTRESS LOSSES.
- USE A CREEP FACTOR EQUAL TO 1.6 AND P/S LOSS EQUAL TO 10%.

PRESTRESSED BOX BEAM DATA		
LOCATION	SPANS A1, A2 & A3	SPANS A4 & A5
BEAM NUMBER	B1 THRU B3	B4 THRU B6
PRESTRESSED BEAM SIZE	36"x 17"	36"x 17"
JACKING FORCE PER BEAM (KIPS)	541	406
NUMBER OF STRANDS *	16	12
CONCRETE STRENGTH AT STRAND RELEASE (f'ci)	6800 psi	6800 psi
CONCRETE STRENGTH AT 28 DAYS (f'c)	8000 psi	8000 psi
CENTER OF GRAVITY OF STRANDS FROM BOTTOM OF BEAM AT CENTERLINE OF BEARINGS	3.50	3.33
CENTER OF GRAVITY OF STRANDS FROM BOTTOM OF BEAM AT MID SPAN	3.50	3.33
ECCENTRICITY OF STRANDS FROM NEUTRAL AXIS OF BEAM AT CENTERLINE OF BEARINGS	4.32	4.49
ECCENTRICITY OF STRANDS FROM NEUTRAL AXIS OF BEAM AT MID SPAN	4.32	4.49

* ½" ø OVERSIZE (ACTUAL = 0.520" ø, AREA = 0.167 IN.²)
LOW RELAXATION STRANDS fpu = 270 ksi
PRESTRESSING STRESS PER BEAM fpi = 202.5 ksi

STRAND PATTERN NOTES

- DO NOT PLACE MORE THAN ONE COLUMN OF PRESTRESSING STRANDS IN WEBS.
- DO NOT PLACE PRESTRESSING STRANDS AT CORNER IN BOTTOM ROW.
- STRAND PATTERN SHOWN PROVIDE A 25% INCREASE IN THE NUMBER OF STRANDS IN THE BOTTOM TWO ROWS ABOVE THAT REQUIRED FOR DESIGN. ALTERNATE STRAND PATTERNS BY THE BEAM FABRICATOR MUST PROVIDE THE SAME PERCENTAGE INCREASE IN THE NUMBER OF STRANDS IN THE BOTTOM TWO ROWS

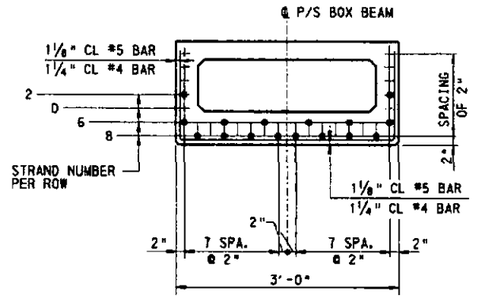

TYPICAL STRAND PATTERN BEAMS B1, B2 & B3

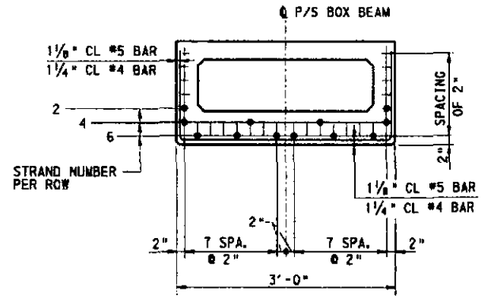

TYPICAL STRAND PATTERN BEAMS B4, B5 & B6

NOTES

- FOR GENERAL NOTES SEE SHEETS 5 AND 6.
- FOR BEAM LOCATIONS SEE SHEET 32.
- FOR ADDITIONAL BEAM DETAILS SEE SHEET 33.

Mark	Description	By	Chk'd.	Recm'd.	Date
REVISIONS					

COMMONWEALTH OF PENNSYLVANIA
DEPARTMENT OF TRANSPORTATION

ARMSTRONG COUNTY
SR 1038 SECTION 150
SEG 0040 OFFSET 1110
SR 1038-150 STA 1956+35.83 AND SR 4025 OVER BUFFALO AND PITTSBURGH RAILROAD
4 SPAN STEEL MULTI-GIRDER BRIDGE AND SINGLE SPAN ROLLED BEAM T-SPAN
BOX BEAM FABRICATION DETAILS

COMMONWEALTH OF PENNSYLVANIA PROFESSIONAL KEITH A. MICHAEL ENGINEER

RECOMMENDED _____ DATE 1 2007

SHEET 34 OF 97

S-27038

DESIGNED BY	RES
DRAWN BY	RLG
CHECKED BY	PAM

M:\eProj\667\8043\Structure\Rittanig\Structure\Rittanig_Structure_Sheet12.dgn 7/31/2007

A-00122496

BEARING LOCATION	BEARING MARK	MASONRY PLATE							ANCHOR BOLTS		DISC			SRM			UPPER BEARING PLATE		TOP PTFE		TOP STAINLESS STEEL			SLIDING PLATE			SOLE PLATE				BEARING HEIGHT*	NO. REQUIRED
		A	B	C	D	E	F	LL	G	QTY.	H	J	K	L	M	P	N	Q	R	S	W	X	Y	LL	MM	NN	FF	GG	HH	JJ	KK	
ABUT 1	WAEDB1	21.500	9.000	1.375	8.750	—	—	1.125	1.000	2	5.500	1.125	0.750	2.437	1.000	0.875	8.500	1.000	7.500	0.188	10.500	1.250	0.090	11.500	12.750	0.750	13.500	14.750	0.750	0.563	5.497	3

* BEARING HEIGHT TAKEN AT ℄ OF BEARING. BEARING HEIGHT INCLUDES ⅛" BEDDING MATERIAL (FABRIC PAD). EFFECTS OF BEVELED SOLE PLATE ARE INCLUDED.

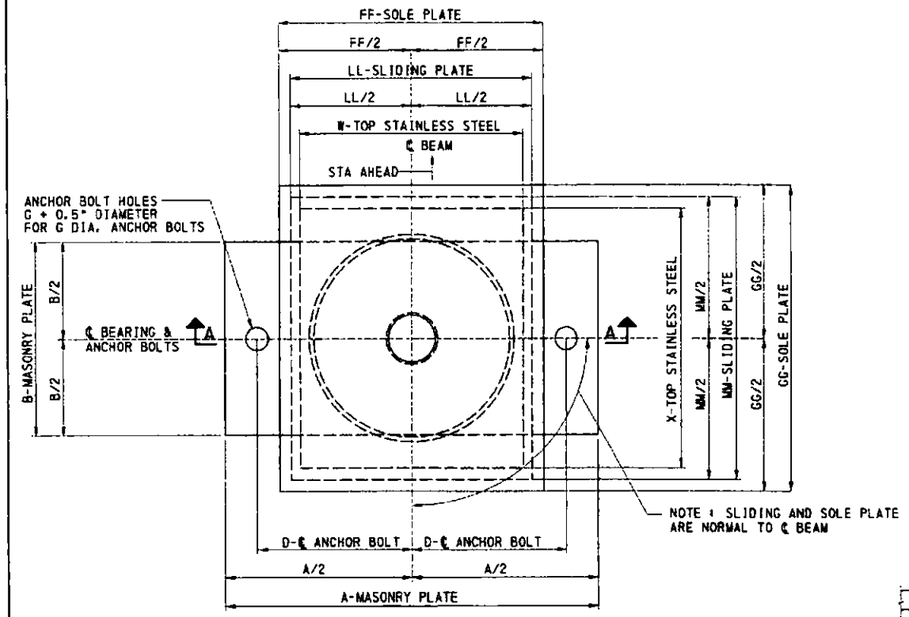

PLAN EXPANSION NON-GUIDED DISC BEARING
NTS

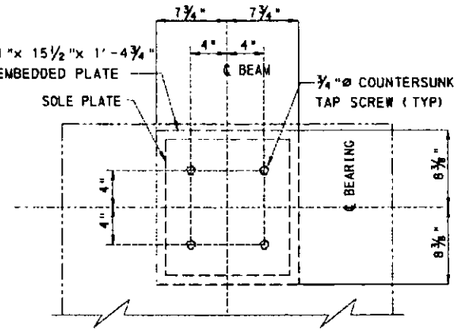

PLAN EMBEDDED PLATE DETAIL
NTS

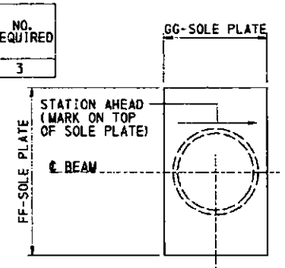

BEVELED SOLE PLATE DETAIL
NTS

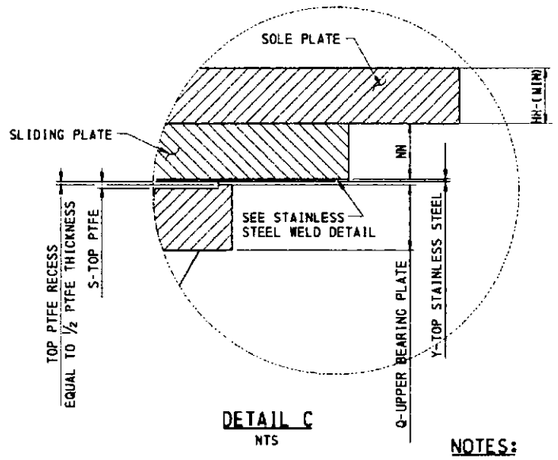

DETAIL C
NTS

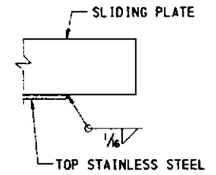

STAINLESS STEEL WELD DETAIL
NTS

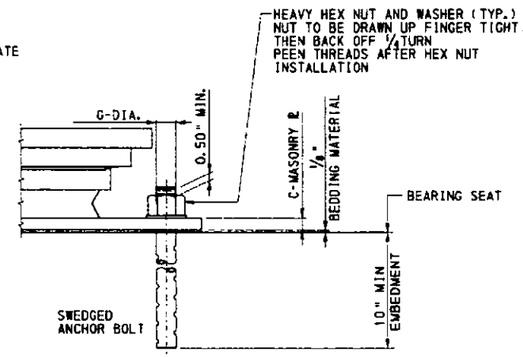

ANCHOR BOLT DETAIL
NTS

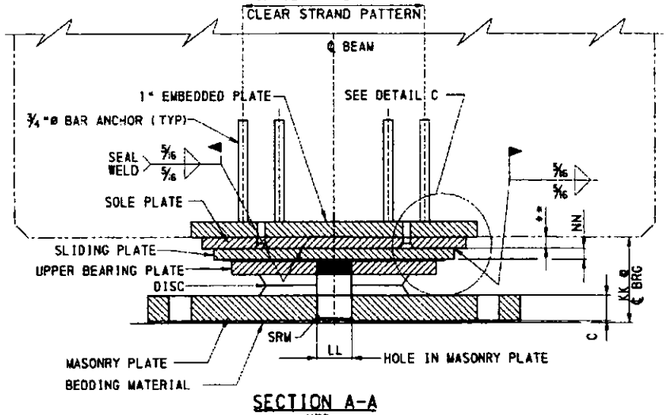

SECTION A-A
NTS

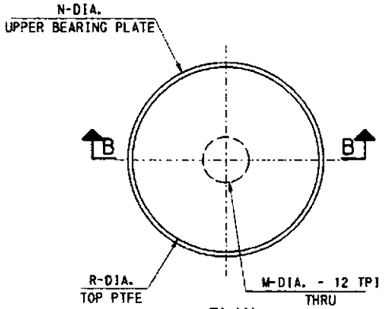

PLAN
NTS

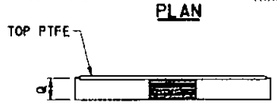

SECTION B-B
UPPER BEARING PLATE
NTS

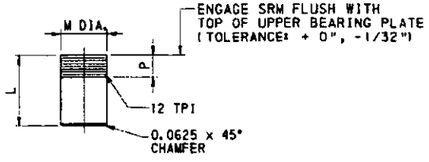

SHEAR RESISTING MECHANISM (SRM)
NTS

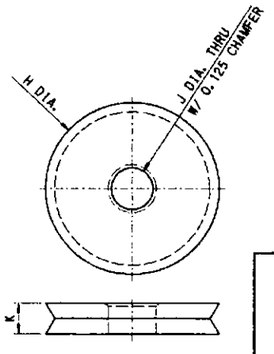

DISC
NTS

NOTES:

- FOR GENERAL NOTES SEE SHEETS 5 AND 6
- FOR FRAMING PLAN SEE SHEET 32
- FOR DISC BEARING LOCATION PLAN SEE SHEET 56
- FOR DISC BEARING NOTES AND MATERIALS SEE SHEET 60
- FOR DISC BEARING DESIGN LOADS SEE SHEETS 62
- FOR 1" EMBEDDED PLATE DETAILS NOT SHOWN SEE BC-755M

LEGEND

** SEE BEVELED SOLE PLATE DETAIL

Mark	Description	By	Chk'd.	Recm'd.	Date
REVISIONS					

DESIGNED BY	RES
DRAWN BY	RLG
CHECKED BY	MP

COMMONWEALTH OF PENNSYLVANIA
DEPARTMENT OF TRANSPORTATION

ARMSTRONG COUNTY
SR 1038 SECTION 150
SEG 0040 OFFSET 1110
SR 1038-150 STA 1956+35.83 AND SR 4025 OVER BUFFALO AND PITTSBURGH RAILROAD
4 SPAN STEEL MULTI-GIRDER BRIDGE AND SINGLE SPAN ROLLED BEAM T-SPAN
DISC BEARINGS - WINGWALL A

RECOMMENDED _____ 2007

SHEET 35 OF 97

S-27038

h:\projects\043246\1-pdf\drawings\1\1unit\geffinal\e2\bcbrgt.dgn 7/5/2007

A-00122496

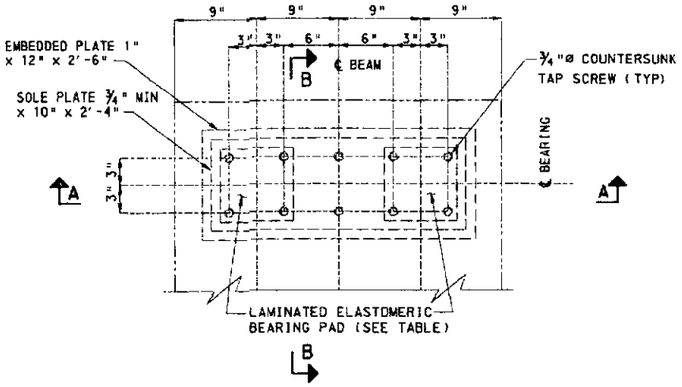

PLAN EMBEDDED PLATE DETAIL
NTS

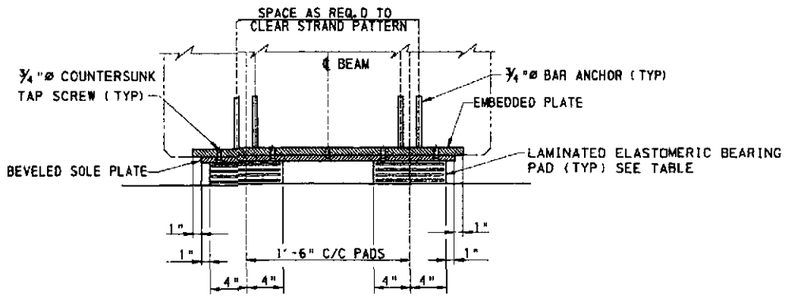

SECTION A-A
NTS

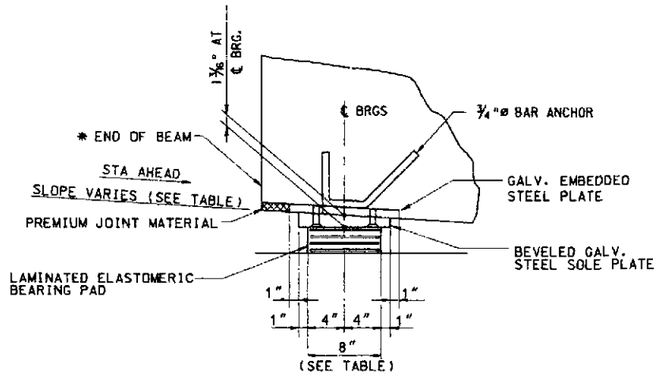

SECTION B-B
NTS

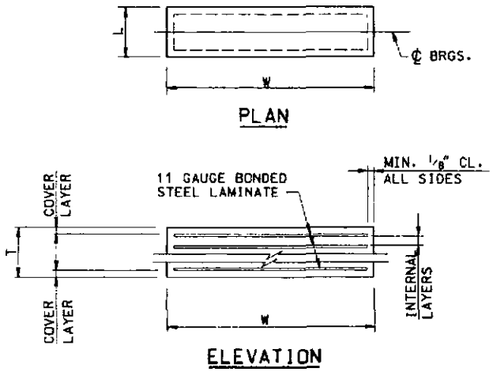

LAMINATED ELASTOMERIC BEARING PAD
NTS

NOTES:

- FOR GENERAL NOTES SEE SHEETS 5 AND 6
- FOR LOCATION OF BEAMS SEE FRAMING PLAN SEE SHEET 32
- FOR BEARING LOCATION PLAN SEE SHEET 56
- FOR ADDITIONAL DETAILS AND NOTES NOT SHOWN SEE BC-755M

LEGEND

* ENDS OF BEAMS TO BE TRULY VERTICAL IN ERECTED POSITION (TYPICAL ALL BEAMS ALL SPANS)

** INCLUDES 1 ADDITIONAL BEARING PAD PROVIDED FOR SAMPLING AND TESTING.

LAMINATED ELASTOMERIC BEARING PADS

LOCATION	MARK	SIZE L	SIZE W	NO. OF INTERNAL LAYERS	INTERNAL LAYER THICKNESS	COVER LAYER THICKNESS	NO. OF STEEL SHIMS	TOTAL BEARING THICK.(T)	NUMBER REQUIRED	BEVELED SOLE PLATE SLOPE STA AHEAD
PIER C1, SPAN A1 (EXPANSION)	EP1	8"	8"	6	3/8"	1/4"	5	2 5/8"	**7	-8.10
PIER C2, SPAN A1 & A2 (EXPANSION)	EP2	8"	8"	5	1/2"	1/4"	4	2 1/2"	12	-7.85
PIER C3, SPAN A2 & A3 (FIXED)	FP1	8"	8"	5	1/2"	1/4"	4	2 1/2"	**13	-7.60
PIER C4 SPAN A3 & A4 (EXPANSION)	EP2	8"	8"	5	1/2"	1/4"	4	2 1/2"	12	-7.60
PIER C5 SPAN A4 & A5 (EXPANSION)	EP2	8"	8"	5	1/2"	1/4"	4	2 1/2"	12	-7.60

Mark	Description	By	Chk'd.	Recm'd.	Date
REVISIONS					

DESIGNED BY	JPL
DRAWN BY	RLG
CHECKED BY	MP

COMMONWEALTH OF PENNSYLVANIA
DEPARTMENT OF TRANSPORTATION

ARMSTRONG COUNTY
SR 1038 SECTION 150
SEG 0040 OFFSET 1110
SR 1038-150 STA 1956+35.83 AND SR 4025 OVER
BUFFALO AND PITTSBURGH RAILROAD
4 SPAN STEEL MULTI-GIRDER BRIDGE AND
SINGLE SPAN ROLLED BEAM T-SPAN
ELASTOMERIC BEARINGS - WINGWALL A

RECOMMENDED _____

SHEET 36 OF 97

S-27038

A-00122496

h:\projects\043248\structure\sr_1038\engineering\elastbgn.dgn 7/27/2007

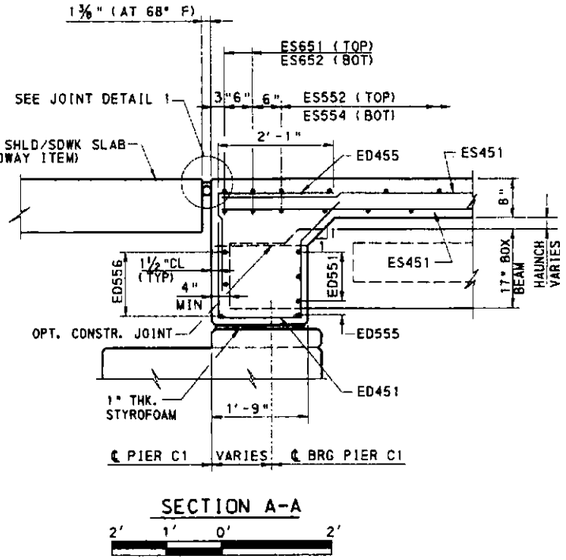

SECTION A-A

2' 1' 0' 2'

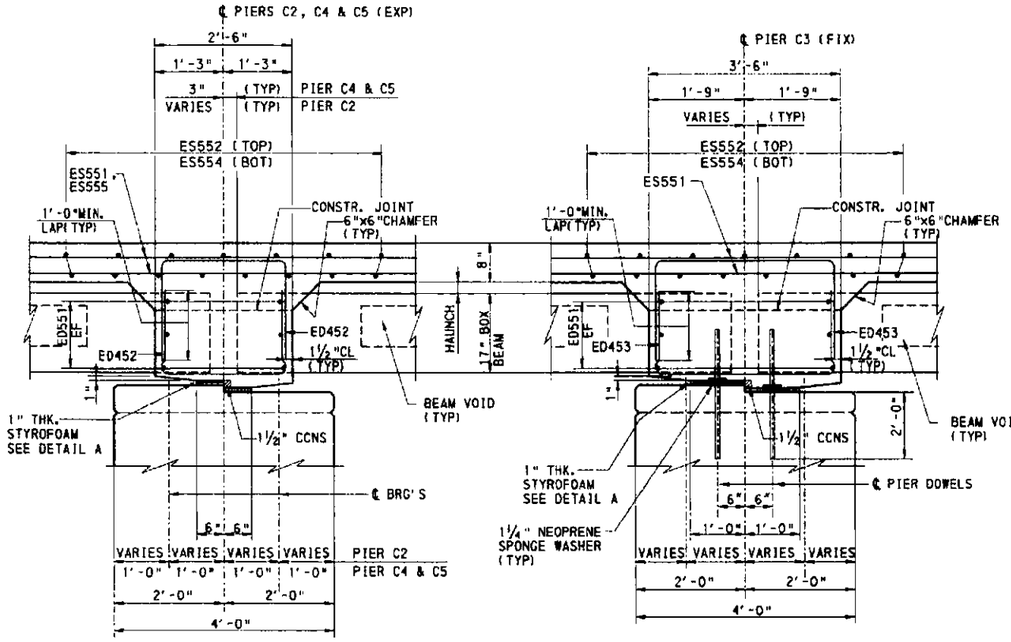

SECTION B-B

2' 1' 0' 2'

SECTION C-C

2' 1' 0' 2'

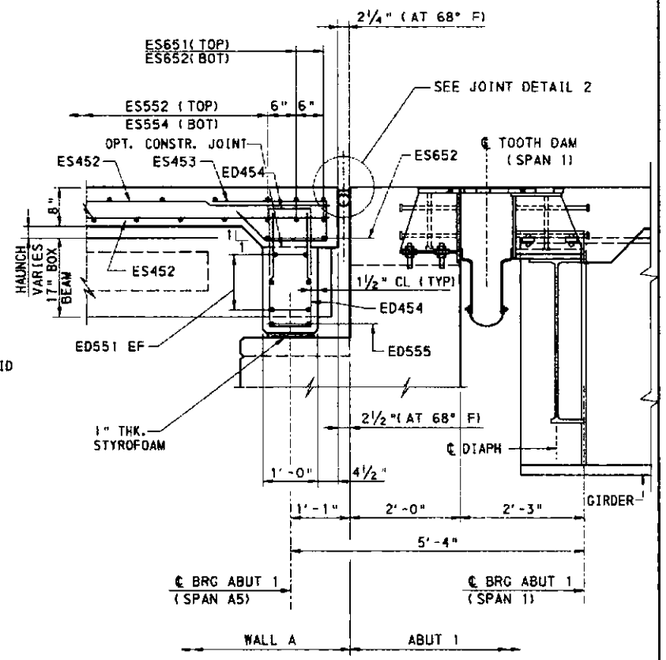

SECTION D-D

2' 0' 1' 2'

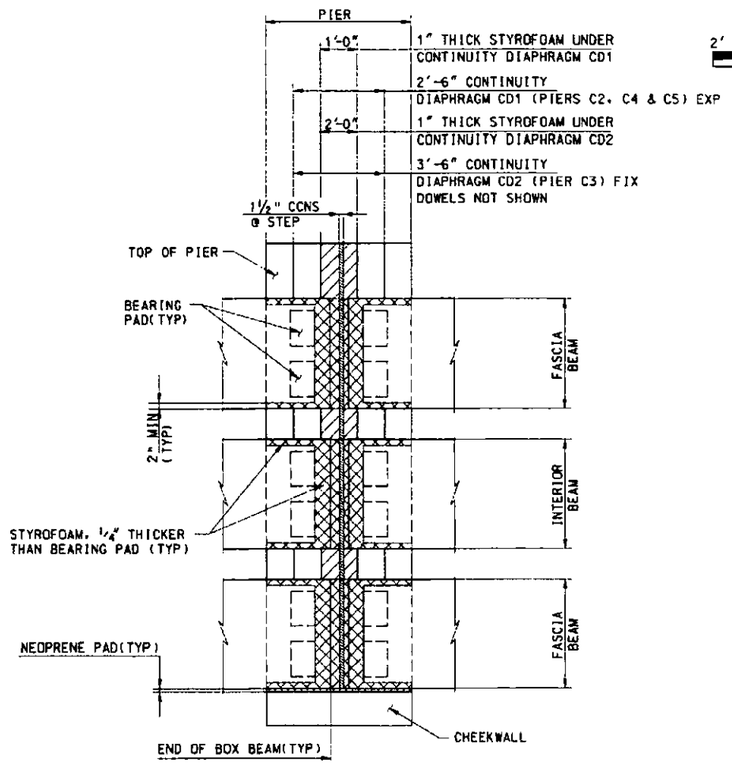

DETAIL A

NTS

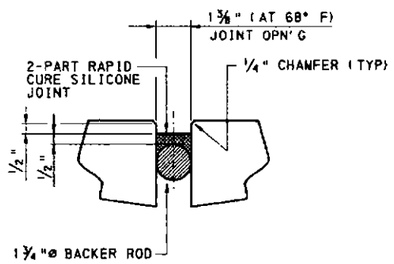

JOINT DETAIL 1

NTS

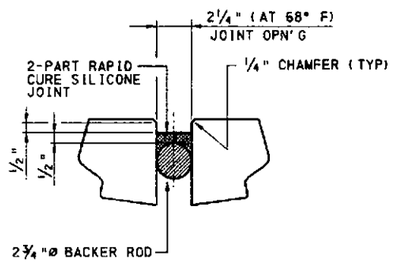

JOINT DETAIL 2

NTS

NOTES

- FOR GENERAL NOTES SEE SHEETS. 5 AND 6.
- FOR DOWEL LOCATION AND SPACING SEE SHEET 13.
- FOR DIAPHRAGM AND SECTION LOCATIONS SEE SHEET 32.
- FOR BEAM DETAILS SEE SHEETS 33 AND 34.
- FOR DECK PLAN SEE SHEET 64.
- FOR REINFORCEMENT BAR SCHEDULE SEE SHEET 83.
- ALL SECTIONS SHOWN HORIZONTAL
- FOR ADDITIONAL DOWEL DETAILS SEE STANDARD DRAWING BC-775M.
- FOR ADDITIONAL WATERPROOFING DETAILS SEE STANDARD DRAWINGS BC-788M.

LEGEND

EF DENOTES EACH FACE
CCNS DENOTES CLOSED CELL NEOPRENE SPONGE

Mark	Description	By	Chk'd.	Recm'd.	Date
REVISIONS					

DESIGNED BY	RES
DRAWN BY	RLG
CHECKED BY	PAM

COMMONWEALTH OF PENNSYLVANIA
DEPARTMENT OF TRANSPORTATION

ARMSTRONG COUNTY
SR 1038 SECTION 150
SEG 0040 OFFSET 1110
SR 1038-150 STA 1956+35.83 AND SR 4025 OVER
BUFFALO AND PITTSBURGH RAILROAD
4 SPAN STEEL MULTI-GIRDER BRIDGE AND
SINGLE SPAN ROLLED BEAM T-SPAN
DIAPHRAGM DETAILS 1 WINGWALL A

RECOMMENDED _____

SHEET 37 OF 97

S-27038

A-00122496

COMMONWEALTH OF PENNSYLVANIA REGISTERED PROFESSIONAL KEITH A. MICHAEL ENGINEER

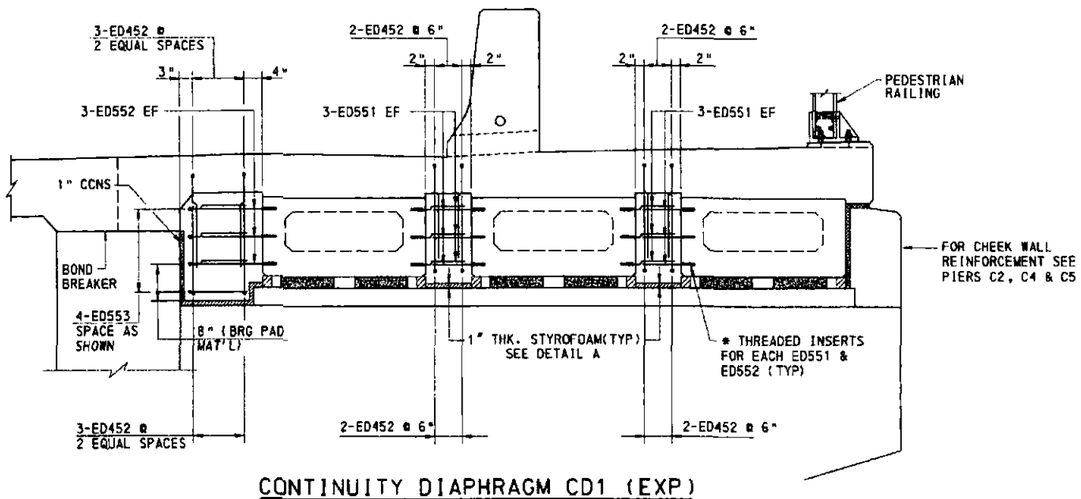

CONTINUITY DIAPHRAGM CD1 (EXP)

PIERS C2,C4 & C5

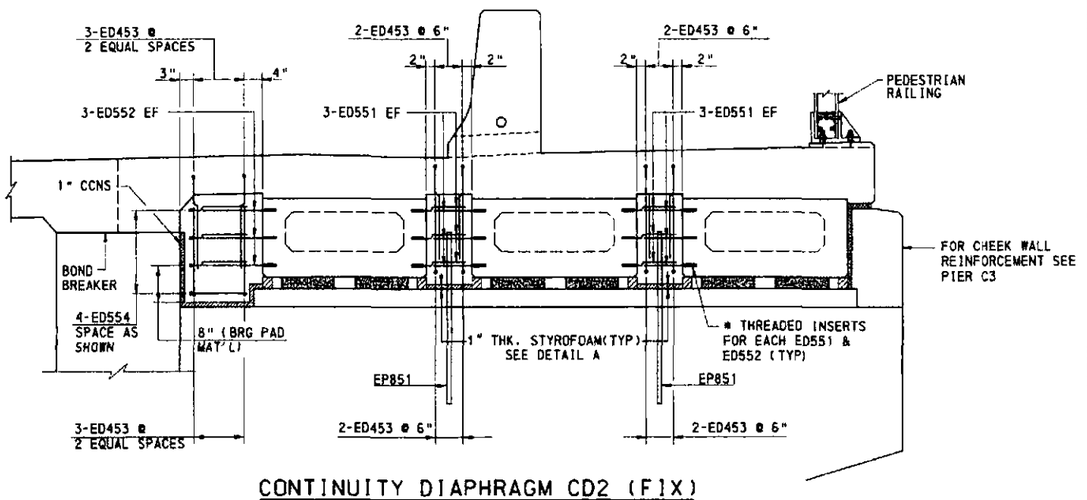

CONTINUITY DIAPHRAGM CD2 (FIX)

PIER C3

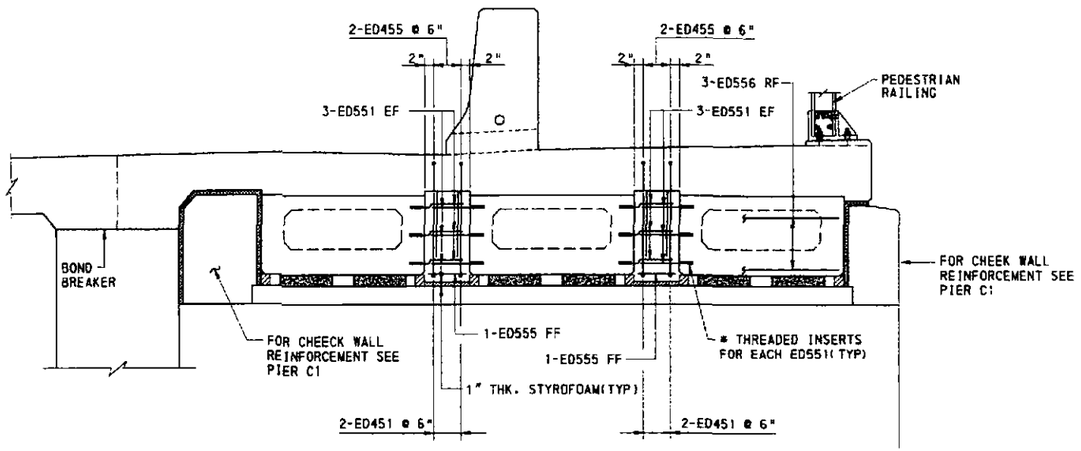

FULL DEPTH DIAPHRAGM D1 (EXP)

PIER C1

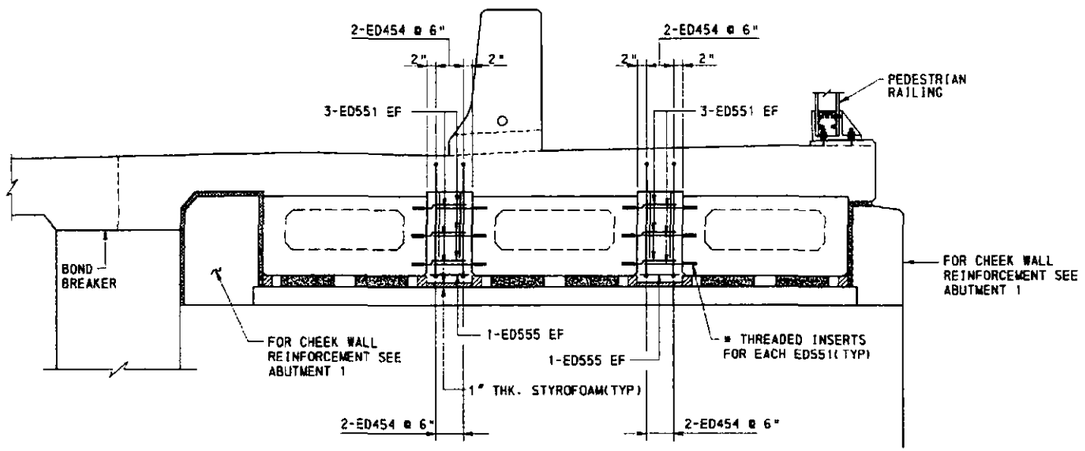

FULL DEPTH DIAPHRAGM D2 (EXP)

ABUTMENT 1

Mark	Description	By	Chk'd.	Recm'd.	Date
REVISIONS					

LEGEND

* USE SAME SIZE INSERT FOR PLAIN BARS AND ONE SIZE SMALLER FOR DEFORMED BARS. MINIMUM LENGTH OF INSERT IS 3".

FF FRONT FACE
RF REAR FACE
EF EACH FACE
CCNS CLOSED CELL NEOPRENE SPANGE

NOTES

- FOR GENERAL NOTES SEE SHEETS 5 AND 6.
- FOR ABUTMENT 1 DETAILS SEE SHEETS 8, 9, AND 10.
- FOR DETAIL A SEE SHEET 37.
- FOR DOWEL LOCATION AND SPACING SEE SHEET 13.
- FOR DIAPHRAGM AND SECTION LOCATIONS SEE SHEET 32.
- FOR BEAM DETAILS SEE SHEETS 33 AND 34.
- FOR DECK PLAN SEE SHEET 64.
- FOR REINFORCEMENT BAR SCHEDULE SEE SHEET 83.
- FOR ADDITIONAL DOWEL DETAILS SEE STANDARD DRAWING BC-775M.
- FOR ADDITIONAL WATERPROOFING DETAILS SEE STANDARD DRAWINGS BC-788M.

COMMONWEALTH OF PENNSYLVANIA
DEPARTMENT OF TRANSPORTATION

ARMSTRONG COUNTY
SR 1038 SECTION 150
SEG 0040 OFFSET 1110
SR 1038-150 STA 1956+35.83 AND SR 4025 OVER
BUFFALO AND PITTSBURGH RAILROAD
4 SPAN STEEL MULTI-GIRDER BRIDGE AND
SINGLE SPAN ROLLED BEAM T-SPAN
DIAPHRAGM DETAILS 2 WINGWALL A

DESIGNED BY	RES
DRAWN BY	RLG
CHECKED BY	PAM

RECOMMENDED _____ DATE: _____

SHEET 38 OF 97

S-27038

A-00122496

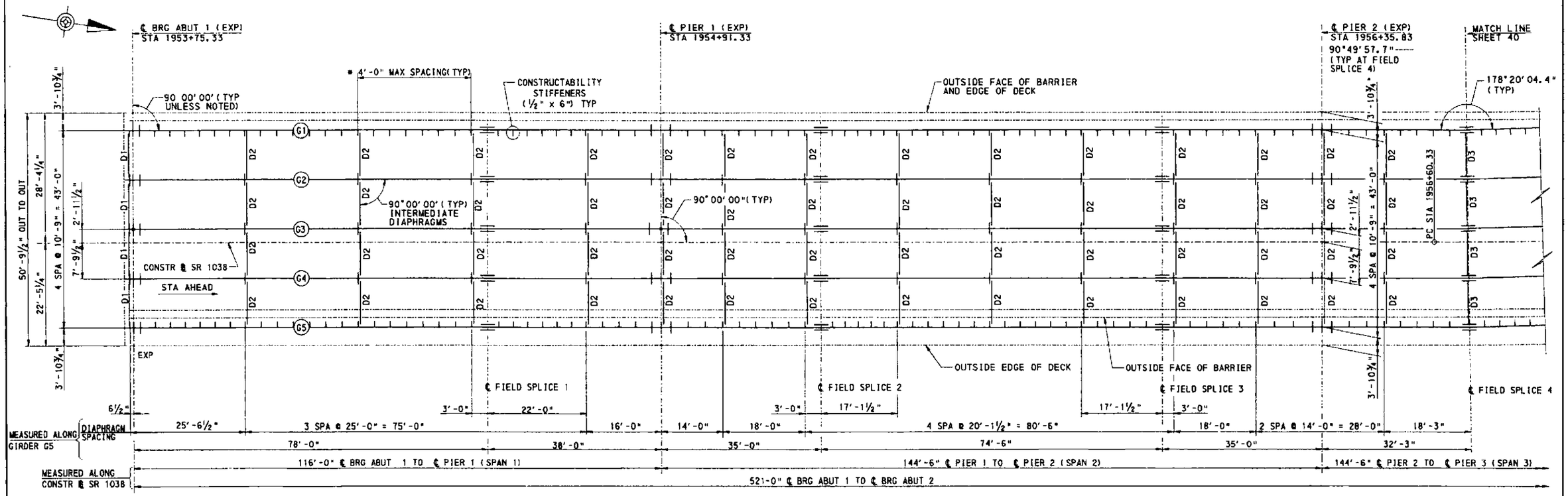

FRAMING PLAN

4' 0' 4'

NOTES

- FOR GENERAL NOTES SEE SHEETS 5 AND 6.
- FOR GIRDER ELEVATIONS SEE SHEETS 41 AND 42.
- FOR FIELD SPLICE DETAILS SEE SHEETS 43 AND 44.
- FOR STEEL DIAPHRAGM DETAILS SEE SHEETS 53, 54, AND 55.
- FOR BEARING DETAILS SEE SHEETS 56 THRU 62.
- FOR NOTE REGARDING CONSTRUCTABILITY STIFFENERS AT G1 AND G5 SEE SHEET 70.

LEGEND

D2 DIAPHRAGM MARK

(G5) GIRDER NUMBER

• CONSTRUCTABILITY STIFFENER SPACING

Mark	Description	By	Chk'd.	Recm'd.	Date
REVISIONS					

COMMONWEALTH OF PENNSYLVANIA
DEPARTMENT OF TRANSPORTATION

ARMSTRONG COUNTY
SR 1038 SECTION 150
SEG 0040 OFFSET 1110
SR 1038-150 STA 1956+35.83 AND SR 4025 OVER
BUFFALO AND PITTSBURGH RAILROAD
4 SPAN STEEL MULTI-GIRDER BRIDGE AND
SINGLE SPAN ROLLED BEAM T-SPAN
FRAMING PLAN 1

COMMONWEALTH OF PENNSYLVANIA REGISTERED PROFESSIONAL KEITH A. MICHAEL ENGINEER 19004

RECOMMENDED _____ APR 6 2007

SHEET 39 OF 97

S-27038

DESIGNED BY	RES
DRAWN BY	ERK
CHECKED BY	MP

A-00122496

S:\projects\M32\estr_jobs\Section_PA\Armstrong\estr\Framing1.dgn 7/5/2007

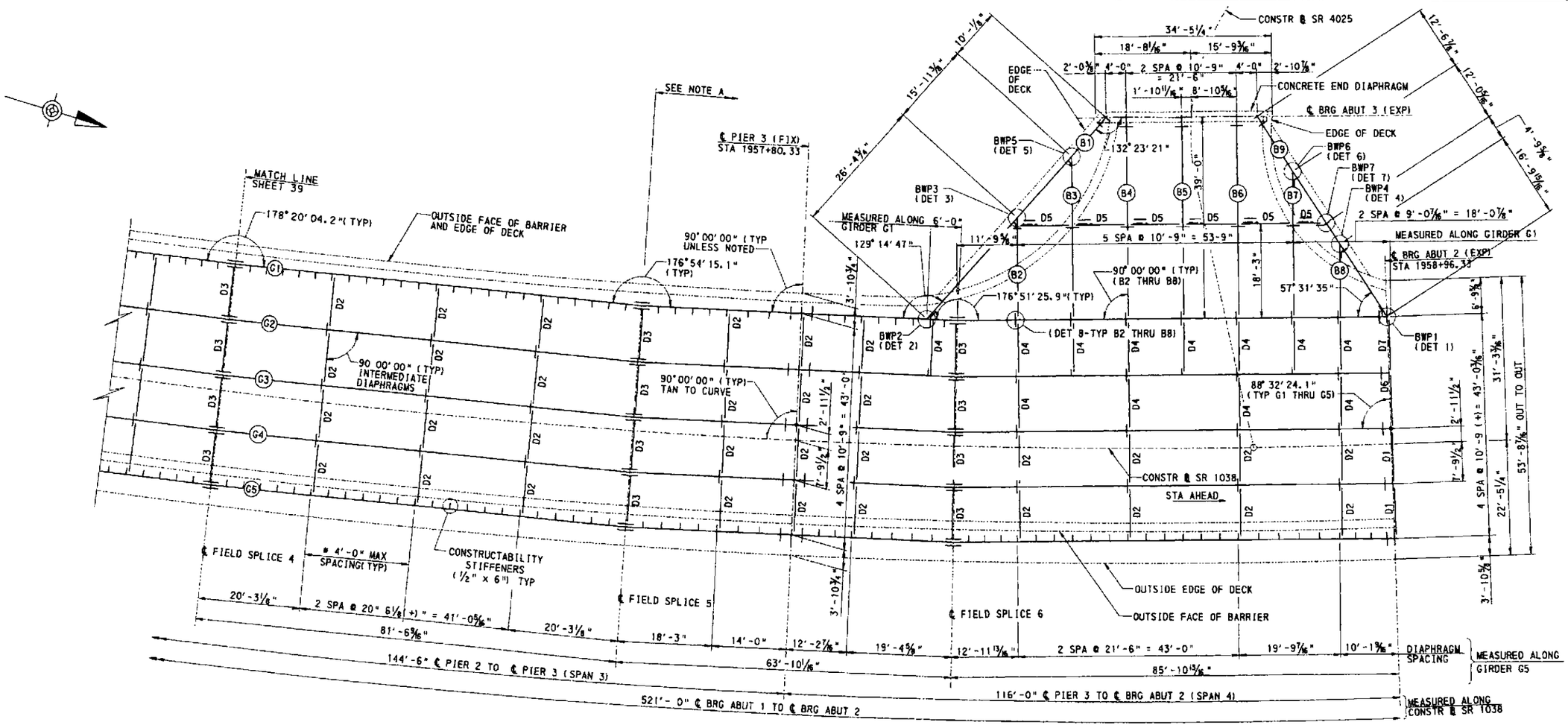

FRAMING PLAN

4' 0' 4'

NOTES

- FOR GENERAL NOTES SEE SHEETS 5 & 6
- FOR GIRDER ELEVATIONS SEE SHEETS 41 & 42
- FOR FIELD SPLICE DETAILS SEE SHEETS 43 & 44
- FOR T-SPAN BEAM ELEVATIONS AND DETAILS SEE SHEET 46
- FOR STEEL DIAPHRAGM DETAILS SEE SHEETS 53,54 & 55
- FOR BEARING DETAILS SEE SHEETS 56 THRU 62
- FOR T-SPAN CONCRETE END DIAPHRAGM DETAILS SEE SHEET 63
- FOR NOTE REGARDING CONSTRUCTABILITY STIFFENERS AT G1 AND G5 SEE SHEET 70.

LEGEND

D2 DIAPHRAGM MARK

(G3) GIRDER NUMBER

* CONSTRUCTABILITY STIFFENER SPACING

NOTE A:
100% SHOP ASSEMBLY REQUIRED FROM FIELD SPLICE 5 TO ABUTMENT NO.2 FOR G1 AND G2, ALL DIAPHRAGMS BETWEEN G1 AND G2 AND ALL T-SPAN BEAMS (B1 THRU B9) AND DIAPHRAGMS D5.
(SEE SPECIAL PROVISIONS).

Mark	Description	By	Chk'd.	Recm'd.	Date
REVISIONS					

COMMONWEALTH OF PENNSYLVANIA
DEPARTMENT OF TRANSPORTATION

ARMSTRONG COUNTY
SR 1038 SECTION 150
SEG 0040 OFFSET 1110
SR 1038-150 STA 1956+35.83 AND SR 4025 OVER BUFFALO AND PITTSBURGH RAILROAD
4 SPAN STEEL MULTI-GIRDER BRIDGE AND SINGLE SPAN ROLLED BEAM T-SPAN
FRAMING PLAN 2

KEITH A. MICHAEL — REGISTERED PROFESSIONAL — COMMONWEALTH OF PENNSYLVANIA

RECOMMENDED _____ JRL 6 2007

SHEET 40 OF 97

S-27038

DESIGNED BY	RES
DRAWN BY	ERK
CHECKED BY	MP

A-00122496

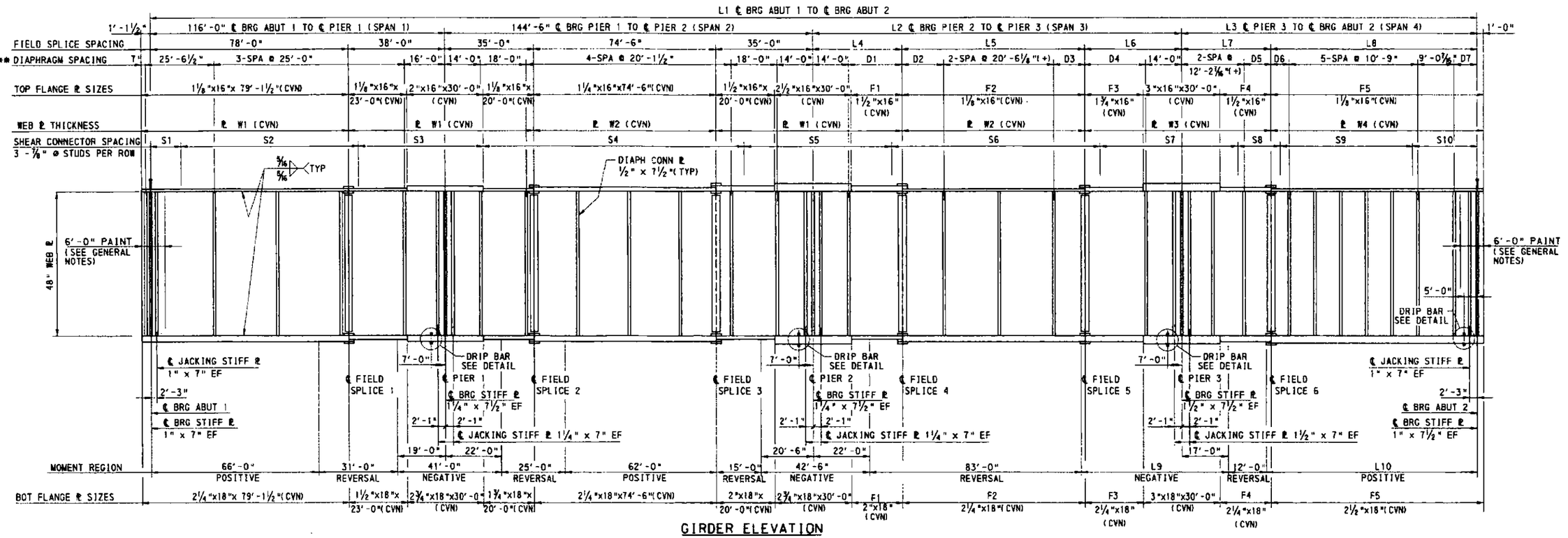

GIRDER ELEVATION

GIRDERS G1 & G2
NTS

GIRDER DIMENSIONS

GIRDER NO.	GIRDER LENGTHS										FLANGE PLATE LENGTHS				
	L1	L2	L3	L4	L5	L6	L7	L8	L9	L10	F1	F2	F3	F4	F5
G1	517'-0⅛"	142'-5 11/16"	114'-0 7/16"	31'-7½"	79'-9⅛"	31'-1⅛"	30'-4 15/16"	83'-7⅝"	54'-5 11/16	85'-0⅜"	16'-7½"	79'-9⅛"	16'-0⅛"	15'-4 15/16"	84'-7⅝"
G2	518'-9⅜"	143'-4 7/16"	114'-10 13/16"	31'-9⅜"	80'-2½"	31'-4⅜"	30'-8⅞"	84'-2⅜"	55'-4⅜"	85'-10 13/16"	16'-9⅜"	80'-2½"	16'-4⅜"	15'-8⅞"	85'-2⅜"

DIAPHRAGM SPACING

GIRDER NO.	D1	D2	D3	D4	D5	D6	D7
G1	17'-7½"	19'-7⅝"	19'-1⅜"	17'-1 1/16"	6'-0"	11'-9 11/16"	9'-0 7/16"
G2	17'-9⅜"	19'-9½"	19'-4 11/16"	17'-4⅝"	6'-3½"	12'-1¼"	9'-3 11/16"

WEB PLATE THICKNESS

GIRDER NO.	W1	W2	W3	W4
G1	5/16"	½"	¾"	11/16"
G2	5/16"	5/16"	11/16"	⅜"

* SHEAR CONNECTOR SPACING

GIRDER NO.	S1	S2	S3	S4	S5	S6	S7	S8	S9	S10
G1	18 @ 8"	92 @ 9"	44 @ 18"	115 @ 9"	32 @ 22"	98 @ 10"	26 @ 24"	94 @ 10"	18 @ 9"	--
G2	16 @ 9"	84 @ 10"	28 @ 21"	123 @ 10"	32 @ 22"	97 @ 10"	27 @ 24"	20 @ 10"	52 @ 12"	28 @ 10"

LEGEND:

EF EACH FACE
IF INSIDE FACE
CVN CHARPY V-NOTCH

* MAXIMUM SPACINGS FOR SHEAR CONNECTORS SHOWN. SEE DETAIL A AND TYPICAL HAUNCH DETAIL ON SHEET 66 FOR ADDITIONAL SHEAR STUD DETAILS AT T-SPAN CONSTRUCTION JOINT AT ℄ GIRDER G1

** SEE FRAMING PLANS FOR CONSTRUCTABILITY STIFFENERS

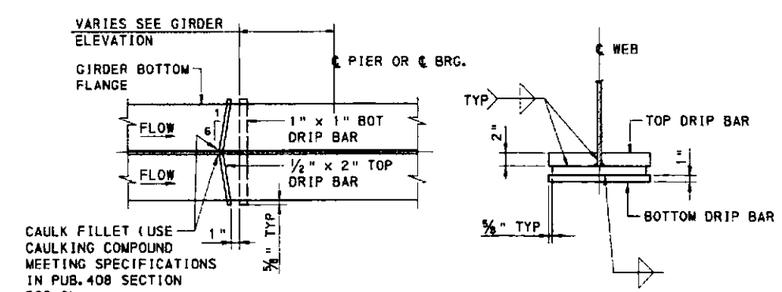

DRIP BAR DETAIL

NTS

NOTES:

- ALL STEEL AASHTO M270 GRADE 50W (ASTM A709 GRADE 50W) UNLESS NOTED OTHERWISE
- FOR STEEL NOTES SEE GENERAL NOTES SHEETS 5 AND 6.
- FOR LOCATION OF GIRDERS AND INTERMEDIATE STIFFENER SPACING SEE FRAMING PLAN SHEETS 41 AND 42.
- FOR CAMBER DIAGRAMS SEE SHEET 48.
- FOR MOMENT AND SHEAR TABLES SEE SHEETS 49 AND 50.
- FOR BEARING DETAILS SEE SHEETS 56 THRU 62.
- FOR FIELD SPLICE AND DIAPHRAGM DETAILS SEE SHEETS 43 AND 44.
- FOR BEARING STIFFENER, CONNECTION PLATE, SHEAR CONNECTOR, AND ADDITIONAL GIRDER DETAILS SEE DRAWING BC-753M.
- ALL GIRDER DIMENSIONS ARE HORIZONTAL AND ARE MEASURED ALONG ℄ GIRDER.
- ALL STIFFENER AND CONNECTION PLATE DIMENSIONS ARE MEASURED TO ℄ STIFFENER.
- FOR FUTURE JACKING LOADS SEE SHEET 42.
- FOR FRAMING PLANS SEE SHEETS 39 AND 40.

DESIGNED BY	BGC
DRAWN BY	GCC
CHECKED BY	MP

Mark	Description	By	Chk'd.	Recm'd.	Date
REVISIONS					

COMMONWEALTH OF PENNSYLVANIA
DEPARTMENT OF TRANSPORTATION

ARMSTRONG COUNTY
SR 1038 SECTION 150
SEG 0040 OFFSET 1110
SR 1038-150 STA 1956+35.83 AND SR 4025 OVER BUFFALO AND PITTSBURGH RAILROAD
4 SPAN STEEL MULTI-GIRDER BRIDGE AND SINGLE SPAN ROLLED BEAM T-SPAN
GIRDER ELEVATION G1 AND G2

RECOMMENDED _____

SHEET 41 OF 97
S-27038

A-00122496

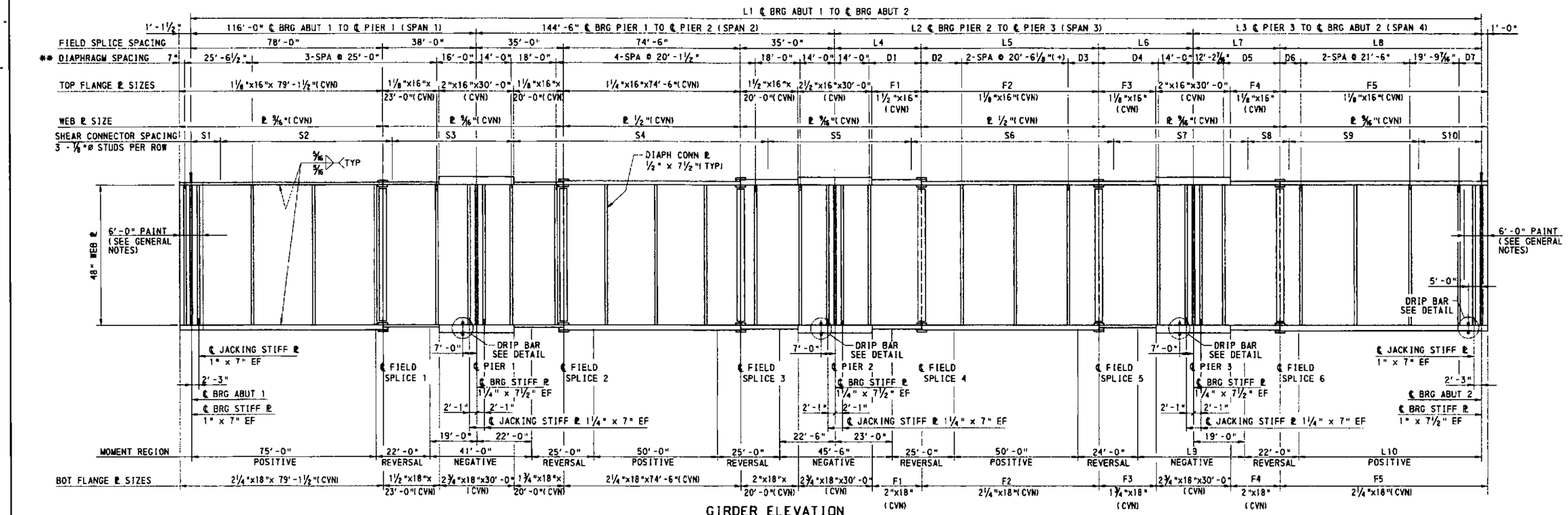

GIRDER ELEVATION

GIRDERS G3 THRU G5
NTS

GIRDER DIMENSIONS

GIRDER NO.	GIRDER LENGTHS										FLANGE PLATE LENGTHS				
	L1	L2	L3	L4	L5	L6	L7	L8	L9	L10	F1	F2	F3	F4	F5
G3	520'-6⅝"	144'-3⅛"	115'-9⅜"	31'-11¼"	80'-7 13/16"	31'-8⅛"	31'-0"	84'-9⅜"	41'-3⅛"	74'-9⅜"	16'-11¼"	80'-7 13/16"	16'-8 1/16"	16'-0"	85'-9⅜"
G4	522'-3⅜"	145'-1 13/16"	116'-7⅝"	32'-1⅛"	81'-1⅜"	31'-11½"	31'-3⅜"	85'-4"	42'-1 13/16"	75'-7⅜"	17'-1⅛"	81'-1⅜"	16'-11½"	16'-3⅜"	86'-4"
G5	524'-0⅞"	146'-0⅝"	117'-5⅞"	32'-3"	81'-6⅝"	32'-3"	31'-7 1/16"	85'-10 13/16"	43'-0⅝"	76'-5⅞"	17'-3"	81'-6⅝"	17'-3"	16'-7 1/16"	86'-10 13/16"

DIAPHRAGM SPACING

GIRDER NO.	D1	D2	D3	D4	D5	D6	D7
G3	17'-11¼"	19'-11⅜"	19'-8⅛"	17'-8 1/16"	18'-9⅜"	12'-4¾"	9'-7"
G4	18'-1⅛"	20'-1¼"	19'-11⅝"	17'-11 5/16"	19'-1 1/16"	12'-8⅝"	9'-10¼"
G5	18'-3"	20'-3⅛"	20'-3⅛"	18'-3"	19'-4⅝"	12'-11 13/16"	10'-1⅝"

* SHEAR CONNECTOR SPACING

S1	S2	S3	S4	S5	S6	S7	S8	S9	S10
16 @ 9"	84 @ 10"	28 @ 21"	123 @ 10"	31 @ 22"	99 @ 10"	35 @ 20"	20 @ 10"	50 @ 12"	30 @ 10"
16 @ 9"	84 @ 10"	28 @ 21"	123 @ 10"	31 @ 22"	99 @ 10"	35 @ 20"	20 @ 10"	50 @ 12"	30 @ 10"
18 @ 8"	92 @ 9"	39 @ 20"	118 @ 9"	31 @ 22"	93 @ 10"	36 @ 21"	92 @ 9"	31 @ 9"	--

FUTURE JACKING LOADS (KIPS)

LOCATION	LIVE LOAD	DEAD LOAD	TOTAL
ABUTMENT 1	120.5	143.8	719.9
PIER 1	239.4	480.5	720.4
PIER 2	244.3	476.1	720.4
PIER 3	259.1	532.6	791.7
ABUTMENT 2	132.2	206.4	338.6
ABUTMENT 3	91.5	165.8	257.3

JACKING LOADS ARE SERVICE LOADS (UNFACTORED)

LEGEND:

EF EACH FACE
IF INSIDE FACE
CVN CHARPY V-NOTCH
* MAXIMUM SPACING FOR SHEAR CONNECTORS SHOWN.
** SEE FRAMING PLANS FOR CONSTRUCTABILITY STIFFENERS

NOTES:

- FOR DETAILS OF GIRDERS G1, G2 AND NOTES SEE SHEET 41.
- FOR DRIP BAR DETAILS SEE SHEET 41.
- FOR FRAMING PLANS SEE SHEETS 39 AND 40.

Mark	Description	By	Chk'd.	Recm'd.	Date
REVISIONS					

DESIGNED BY	BGC
DRAWN BY	GCC
CHECKED BY	MP

COMMONWEALTH OF PENNSYLVANIA
DEPARTMENT OF TRANSPORTATION

ARMSTRONG COUNTY
SR 1038 SECTION 150
SEG 0040 OFFSET 1110
SR 1038-150 STA 1956+35.83 AND SR 4025 OVER
BUFFALO AND PITTSBURGH RAILROAD
4 SPAN STEEL MULTI-GIRDER BRIDGE AND
SINGLE SPAN ROLLED BEAM T-SPAN
GIRDER ELEVATION G3 THRU G5

RECOMMENDED [redacted]

SHEET 42 OF 97
S-27038

A-00122496

h:\pe\plans\sr1038\s27038\fracture\girder\girder1.dgn 7/5/2007

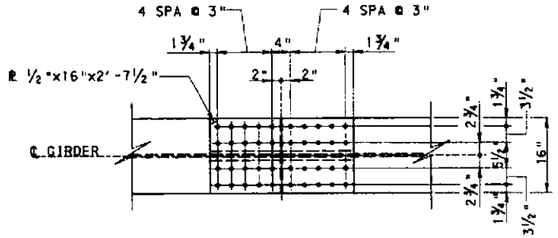

TOP FLANGE

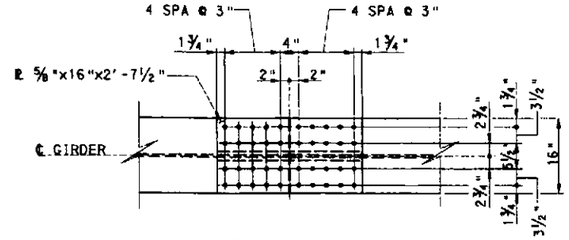

TOP FLANGE

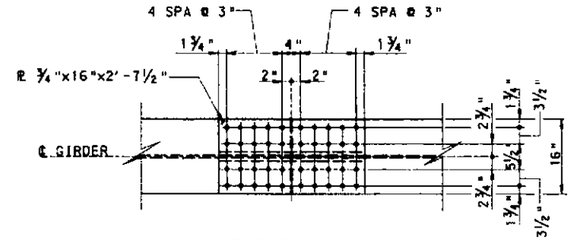

TOP FLANGE

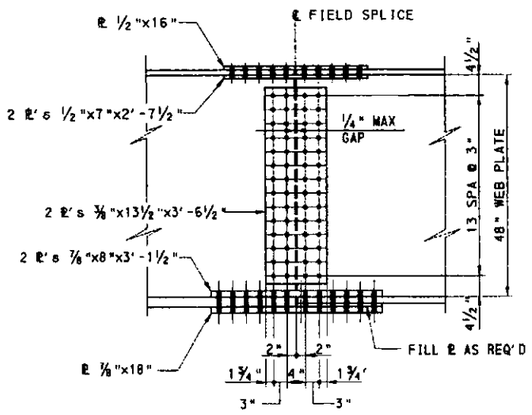

FIELD SPLICE 1
SPAN 1, G1 THRU G5

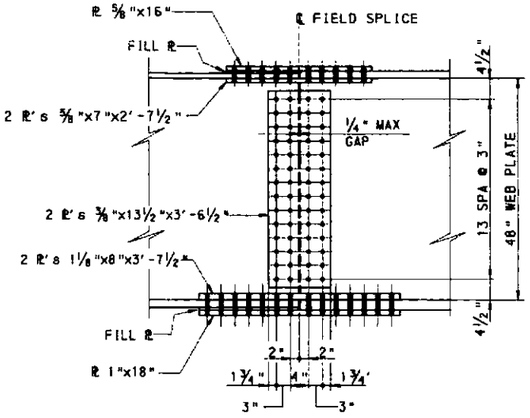

FIELD SPLICE 2
SPAN 2, G1 THRU G5

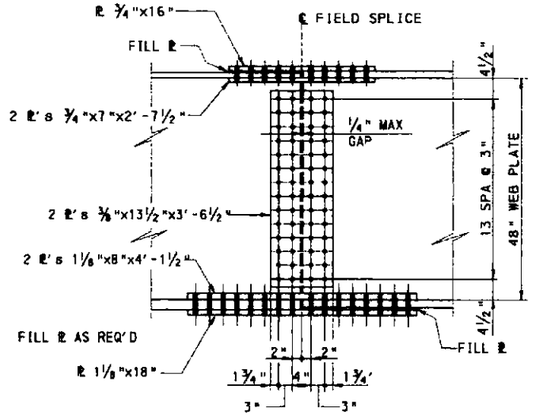

FIELD SPLICE 3
SPAN 2, G1 THRU G5

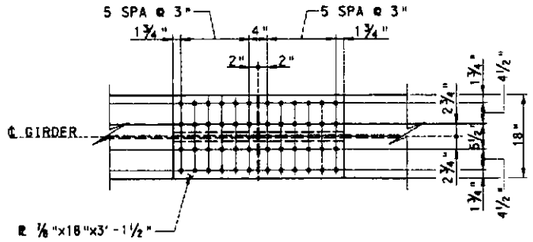

BOTTOM FLANGE

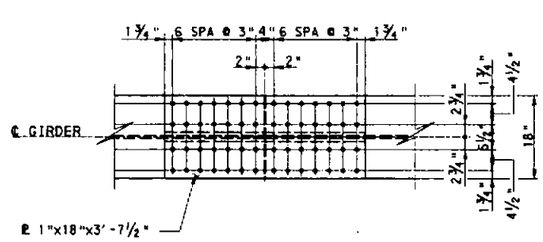

BOTTOM FLANGE

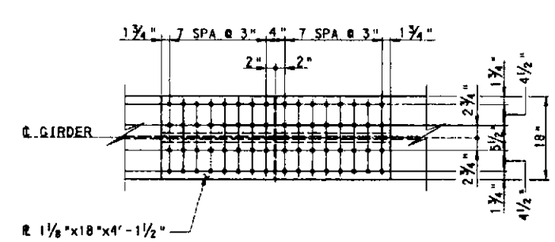

BOTTOM FLANGE

Mark	Description	By	Chk'd.	Recm'd.	Date
REVISIONS					

NOTES:

- FOR STEEL NOTES SEE GENERAL NOTES SHEETS 5 AND 6.
- FOR LOCATION OF FIELD SPLICES SEE FRAMING PLANS SHEETS 39 AND 40.
- FOR GIRDER ELEVATIONS SEE SHEETS 41 AND 42.
- FOR DIAPHRAGM DETAILS AT FIELD SPLICE 4,5 & 6 SEE SHEET 53.
- ALL SPLICE PLATES TO CONFORM TO THE CHARPY V-NOTCH REQUIREMENTS

LEGEND:

WP DENOTES WORK POINT

2' 1' 0' 2'

COMMONWEALTH OF PENNSYLVANIA
DEPARTMENT OF TRANSPORTATION

ARMSTRONG COUNTY
SR 1038 SECTION 150
SEG 0040 OFFSET 1110
SR 1038-150 STA 1956+35.83 AND SR 4025 OVER
BUFFALO AND PITTSBURGH RAILROAD
4 SPAN STEEL MULTI-GIRDER BRIDGE AND
SINGLE SPAN ROLLED BEAM T-SPAN
FIELD SPLICE DETAILS 1

RECOMMENDED _____

SHEET 43 OF 97

S-27038

DESIGNED BY	BGC
DRAWN BY	EK
CHECKED BY	MP

A-00122496

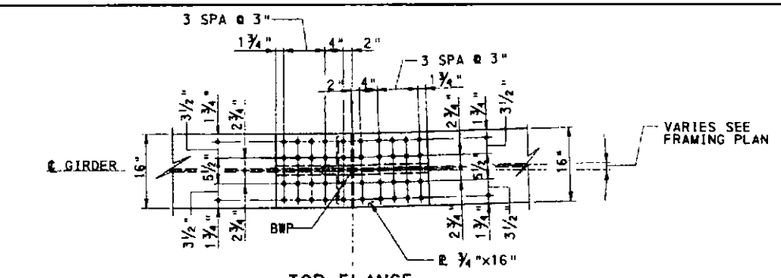

TOP FLANGE

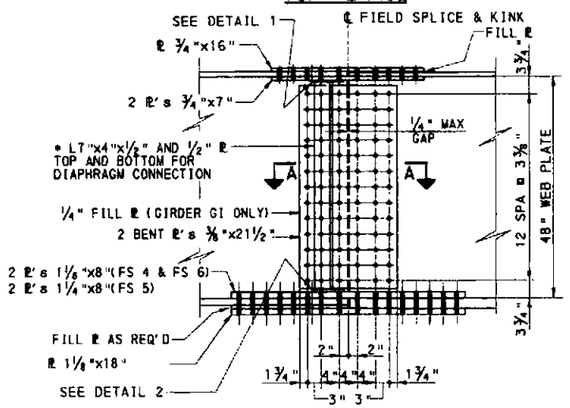

FIELD SPLICE 4,5 & 6

FS 4 & FS 6 SHOWN, FS 5 SIMILAR
FS 4-SPAN 3, G1 THRU G5
FS 5-SPAN 3, G1 AND G2
FS 6-SPAN 4, G3 THRU G5

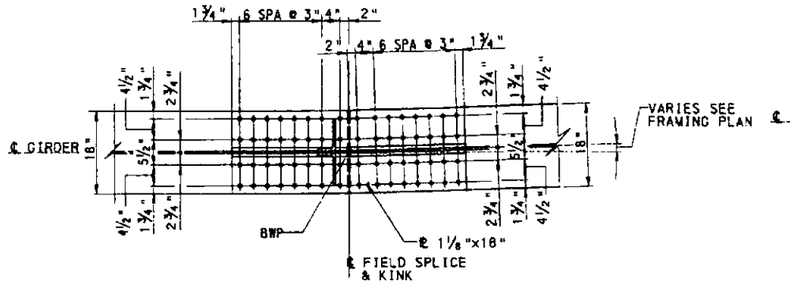

BOTTOM FLANGE

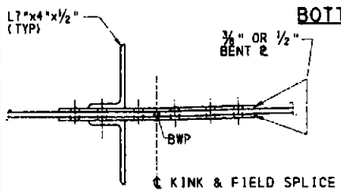

SECTION A-A SHOWN
SECTION B-B SIMILAR

1' 6" 0' 1'

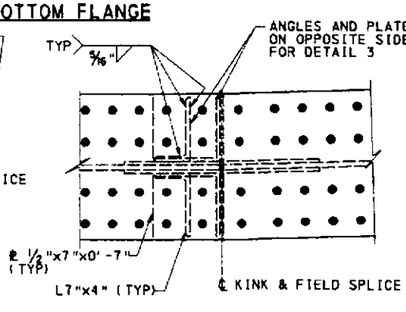

DETAIL 1 SHOWN
DETAIL 3 SIMILAR

1' 6" 0' 1'

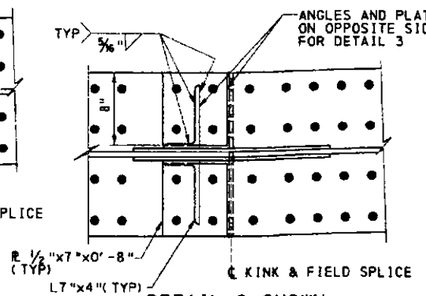

DETAIL 2 SHOWN
DETAIL 4 SIMILAR

1' 6" 0' 1'

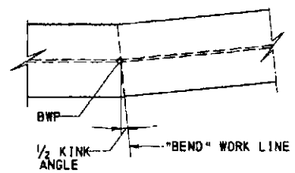

DETAIL OF FLANGE SPLICE PLATES

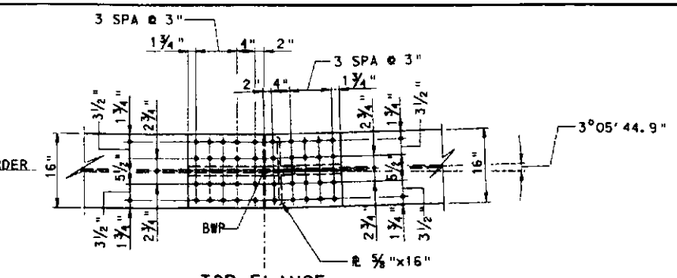

TOP FLANGE

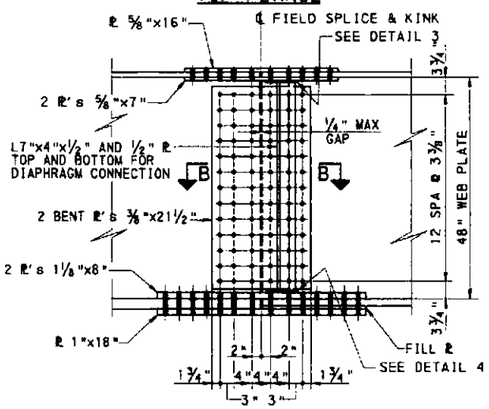

FIELD SPLICE 5

SPAN 3, G3 THRU G5

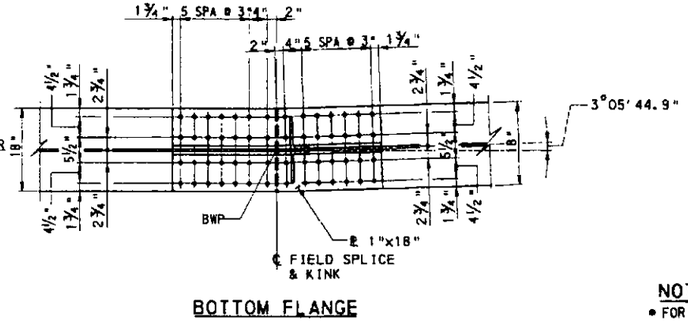

BOTTOM FLANGE

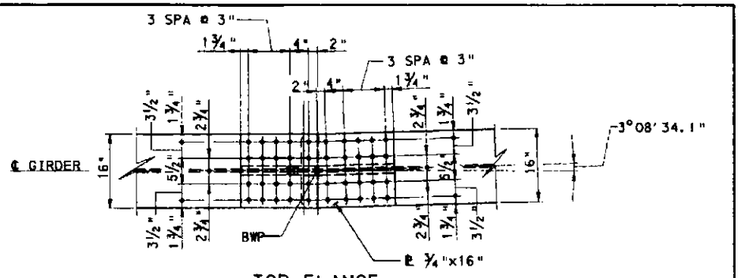

TOP FLANGE

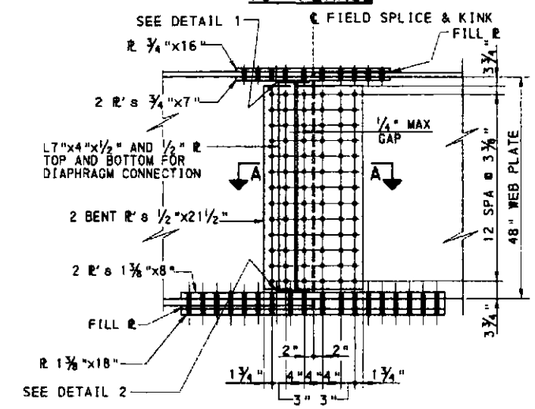

FIELD SPLICE 6

SPAN 4, G1 & G2

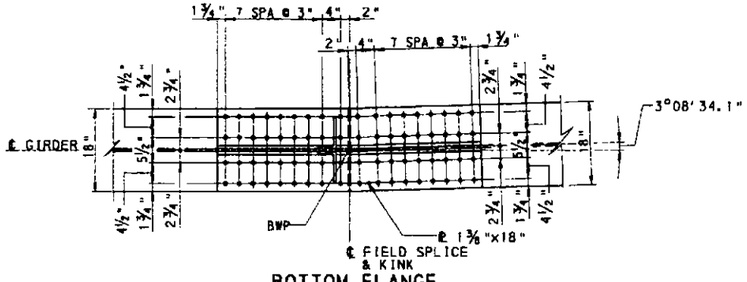

BOTTOM FLANGE

NOTES:
- FOR NOTES SEE SHEET 43.

LEGEND:
BWP BEAM WORK POINT
FS FIELD SPLICE
* ANGLES AND PLATES ARE ON OPPOSITE SIDE OF ℄ FOR FIELD SPLICE 5

2' 1' 0' 2'

UNLESS NOTED

Mark	Description	By	Chk'd.	Recm'd.	Date
	REVISIONS				

COMMONWEALTH OF PENNSYLVANIA
DEPARTMENT OF TRANSPORTATION

ARMSTRONG COUNTY
SR 1038 SECTION 150
SEG 0040 OFFSET 1110
SR 1038-150 STA 1956+35.83 AND SR 4025 OVER BUFFALO AND PITTSBURGH RAILROAD
4 SPAN STEEL MULTI-GIRDER BRIDGE AND SINGLE SPAN ROLLED BEAM T-SPAN
FIELD SPLICE DETAILS 2

DESIGNED BY	BGC
DRAWN BY	EK
CHECKED BY	MP

KEITH A. MICHAEL — REGISTERED PROFESSIONAL ENGINEER — COMMONWEALTH OF PENNSYLVANIA

RECOMMENDED _____

SHEET 44 OF 97

S-27038

A-00122496

NOTE 1

MATCH TOP OF WEB OF T-SPAN BEAM WITH TOP OF WEB OF GIRDER G1

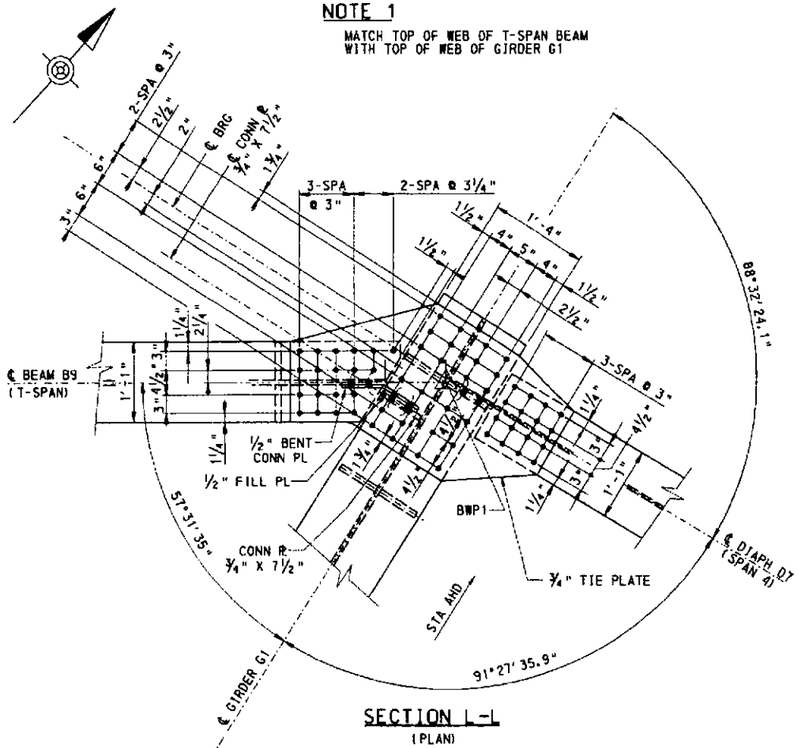

SECTION L-L
(PLAN)

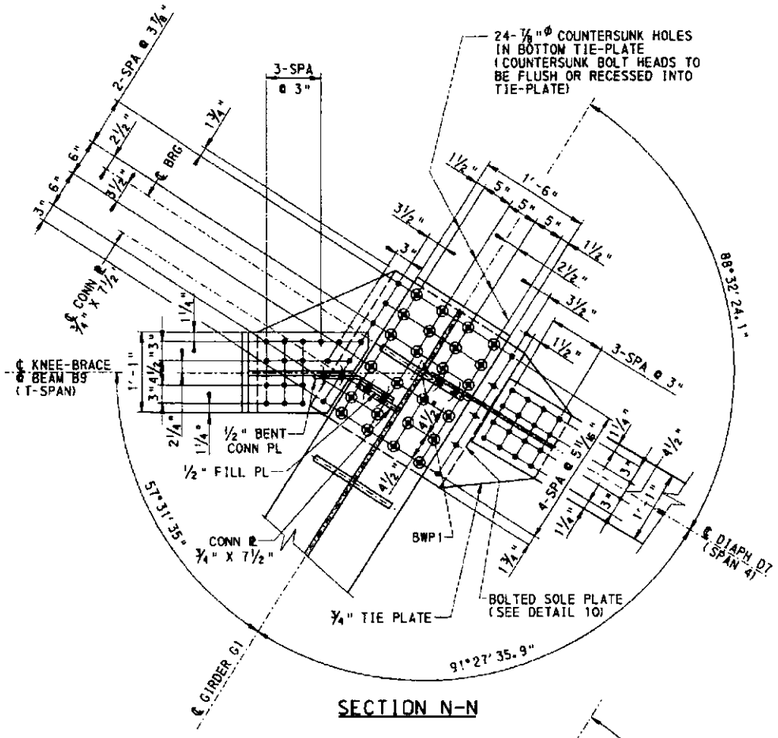

SECTION N-N

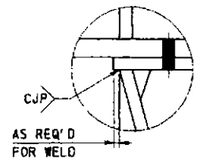

DETAIL 11

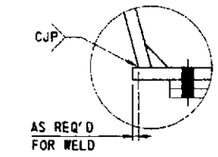

DETAIL 12

NOTES:

- FOR GENERAL NOTES SEE SHEETS 5 & 6
- FOR SECTIONS B-B,C-C,D-D AND G-G SEE SHEET 47
- FOR LOCATION OF DETAIL 1 SEE FRAMING PLAN 2 SHEET 40
- FOR GIRDER ELEVATIONS SEE SHEETS 41 & 42
- FOR BEARING DETAILS SEE SHEETS 57 THRU 62
- FOR BOLTED SOLE PLATE DETAIL 10 SEE SHEET 56
- FOR HAUNCH THICKNESS TABLE SEE DECK PLAN 4 SHEET 69
- FOR ADDITIONAL DIAPHRAGM DETAILS NOT SHOWN SEE STANDARD DRAWING BC-754M
- ALL TIE PLATES TO CONFORM TO THE CHARPY V-NOTCH REQUIREMENTS.
- ALL BOLT HOLES 15/16"ø FOR ⅞"ø A325 HS BOLTS UNLESS NOTED.
- COUNTERSUNK BOLTS TO BE ⅞"ø, ASTM A449

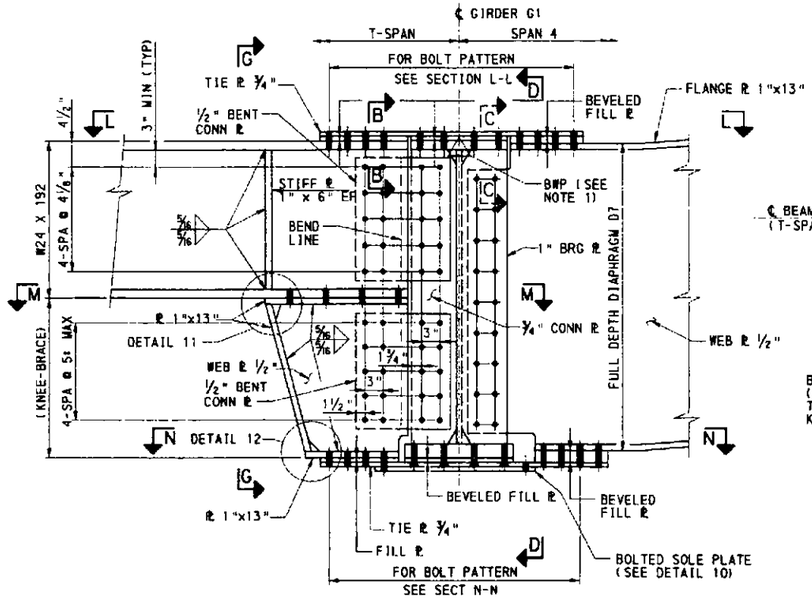

ELEVATION
(CONNECTION BEAM B9 T-SPAN AND DIAPHRAGM D7 TO GIRDER G1)
(SHOWN DEVELOPED)

DETAIL 1

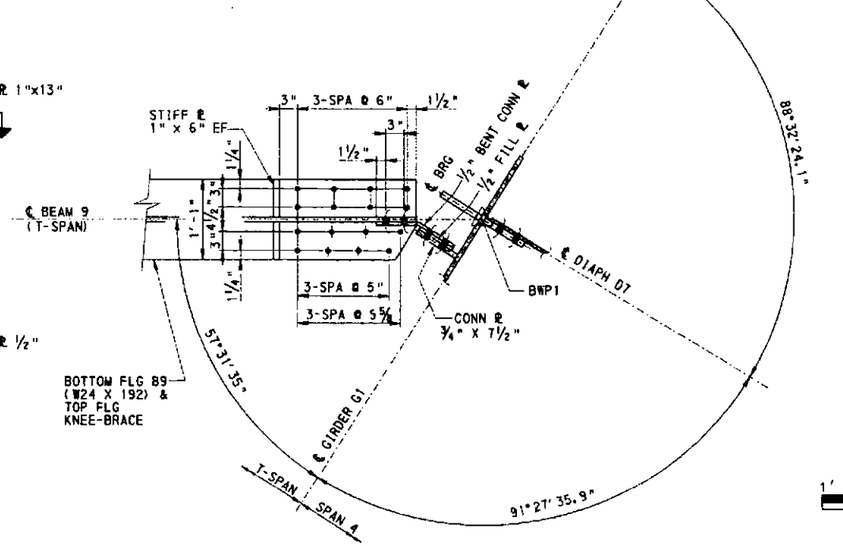

SECTION M-M

1' 0' 1'

LEGEND

BWP BEAM WORK POINT

EF EACH FACE

Mark	Description	By	Chk'd.	Recm'd.	Date
REVISIONS					

DESIGNED BY	JPL
DRAWN BY	JH
CHECKED BY	PAM

COMMONWEALTH OF PENNSYLVANIA
DEPARTMENT OF TRANSPORTATION

ARMSTRONG COUNTY
SR 1038 SECTION 150
SEG 0040 OFFSET 1110
SR 1038-150 STA 1956+35.83 AND SR 4025 OVER BUFFALO AND PITTSBURGH RAILROAD
4 SPAN STEEL MULTI-GIRDER BRIDGE AND SINGLE SPAN ROLLED BEAM T-SPAN
T-SPAN GIRDER DETAILS 1

RECOMMENDED _____ JUL 6 20..

SHEET 45 OF 97

S-27038

A-00122496

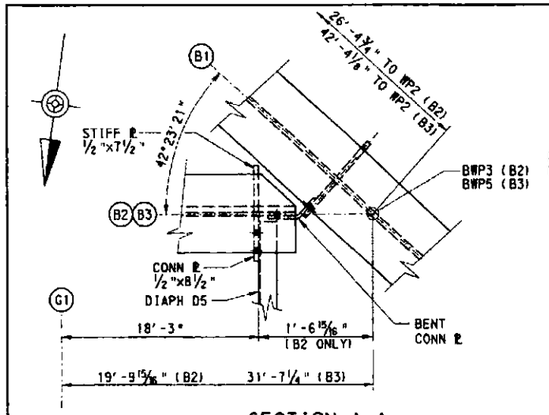

SECTION A-A

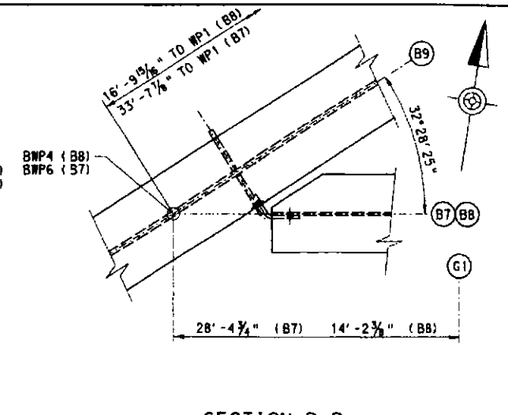

SECTION B-B

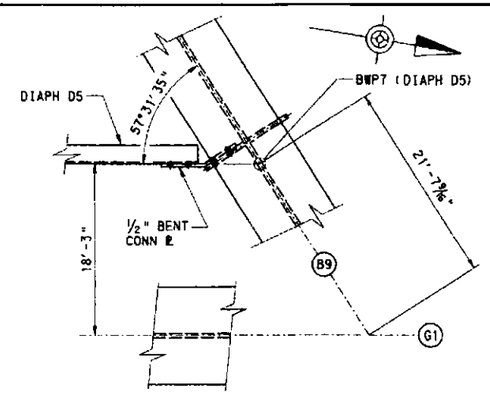

SECTION C-C

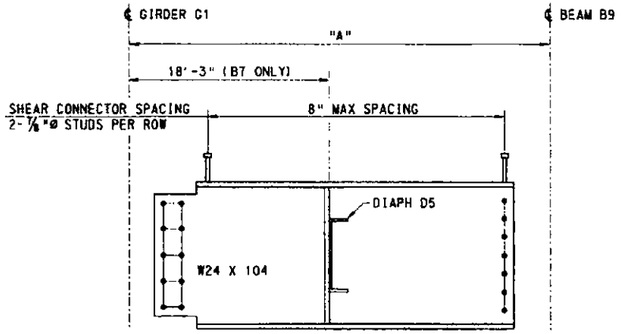

ELEVATION

BEAM DIMENSIONS	
BEAM NO	"A"
B7	28'-4¾"
B8	14'-2⅜"

BEAMS B7 & B8

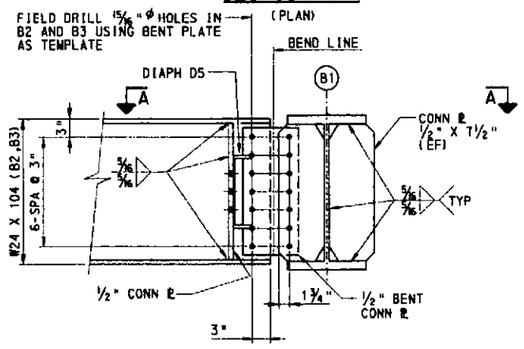

ELEVATION

CONNECTION BEAM B2 TO B1 (AS SHOWN)
CONNECTION BEAM B3 TO B1 (SIMILAR)
(T-SPAN)
(SHOWN DEVELOPED)

DETAIL 3 (BEAM B2)
DETAIL 5 (BEAM B3)

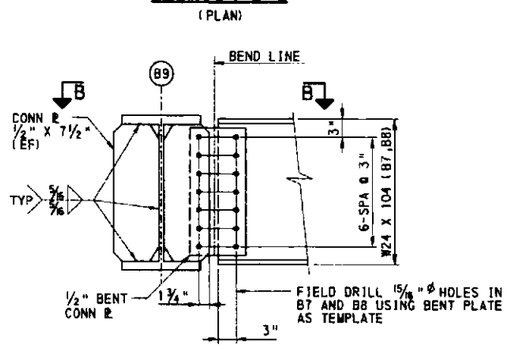

ELEVATION

CONNECTION BEAM B7 TO B9
CONNECTION BEAM B8 TO B9
(T-SPAN)
(SHOWN DEVELOPED)

DETAIL 4 (BEAM B8)
DETAIL 6 (BEAM B7)

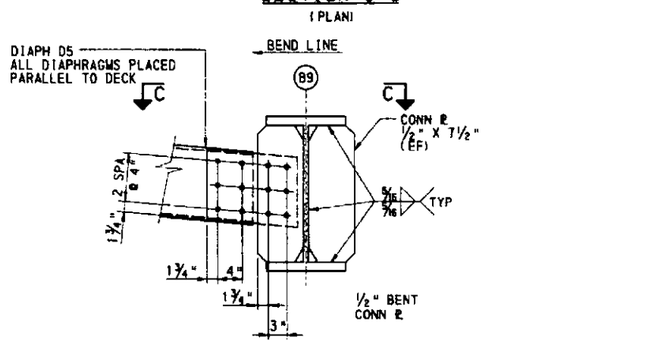

ELEVATION

DIAPHRAGM D5 TO B9
T-SPAN
(SHOWN DEVELOPED)

DETAIL 7 (DIAPH D5)

NOTES:

- FOR GENERAL NOTES SHEETS 5 & 6
- FOR BEAM, DIAPHRAGM AND WORK POINT LOCATIONS SEE FRAMING PLAN 2 SHEET 40
- FOR GIRDER ELEVATIONS SEE SHEETS 41 & 22
- FOR ADDITIONAL DIAPHRAGM DETAILS NOT SHOWN SEE STANDARD DRAWING BC-754M
- ALL BOLT HOLES 15/16"ø FOR ⅞"ø A325 HS BOLTS UNLESS NOTED.
- ALL GIRDER DIMENSIONS ARE HORIZONTAL AND ARE MEASURED ALONG ℄ GIRDER
- FOR T-SPAN CONCRETE END DIAPHRAGM SEE SHEET 63
- BEAMS B2 THRU B8 SHALL BE PLACED WITH ANY MILL CAMBER UP; THE CONTRACTOR SHALL CONSIDER AND COMPENSATE FOR DEAD LOAD DEFLECTION, DUE TO THE WEIGHT OF THE CONCRETE, WHEN FORMING AND CONSTRUCTING THE DECK SLAB.

LEGEND

BWP BEAM WORK POINT

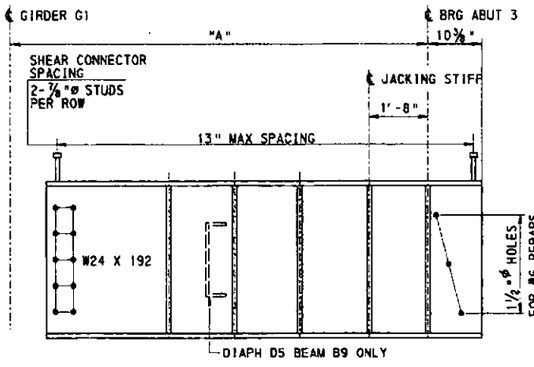

ELEVATION

BEAM DIMENSIONS		
BEAM NO	"A"	"C"
B1	52'-4¼"	1⅞"
B9	46'-2¾"	1⅛"

BEAMS B1 & B9
(BEAM B9 SHOWN)

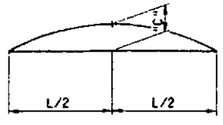

CAMBER DIAGRAM
(BEAMS B1 & B9 ONLY)

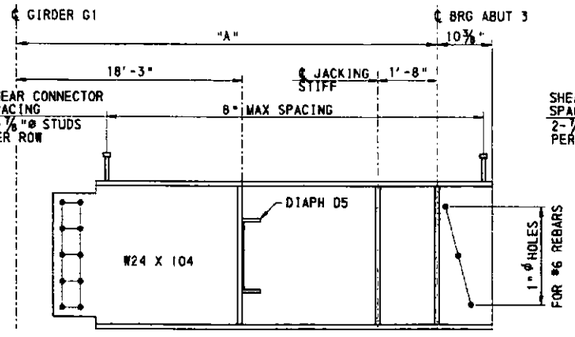

ELEVATION

BEAM DIMENSIONS	
BEAM NO	"A"
B4,B5,B6	39'-0"

BEAMS B4,B5 & B6

NOTE:
ALL BEARING,JACKING PLATES ARE ¾" X 7½" ALL CONNECTION PLATES ARE ½" (TYP)

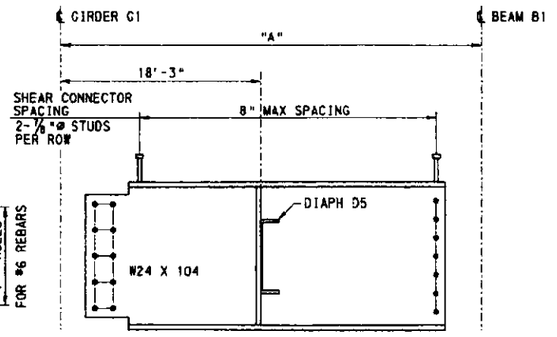

ELEVATION

BEAM DIMENSIONS	
BEAM NO	"A"
B2	19'-9 15/16"
B3	31'-7¼"

BEAMS B2 & B3

1' 0' 1'

Mark	Description	By	Chk'd.	Recm'd.	Date
REVISIONS					

DESIGNED BY	JPL
DRAWN BY	JH
CHECKED BY	PAM

COMMONWEALTH OF PENNSYLVANIA
DEPARTMENT OF TRANSPORTATION

ARMSTRONG COUNTY
SR 1038 SECTION 150
SEG 0040 OFFSET 1110
SR 1038-150 STA 1956+35.83 AND SR 4025 OVER BUFFALO AND PITTSBURGH RAILROAD
4 SPAN STEEL MULTI-GIRDER BRIDGE AND SINGLE SPAN ROLLED BEAM T-SPAN
T-SPAN GIRDER DETAILS 2

KEITH A. MICHAEL — ENGINEER — COMMONWEALTH OF PENNSYLVANIA

RECOMMENDED _____ 2007

SHEET 46 OF 97

S-27038

A-00122496

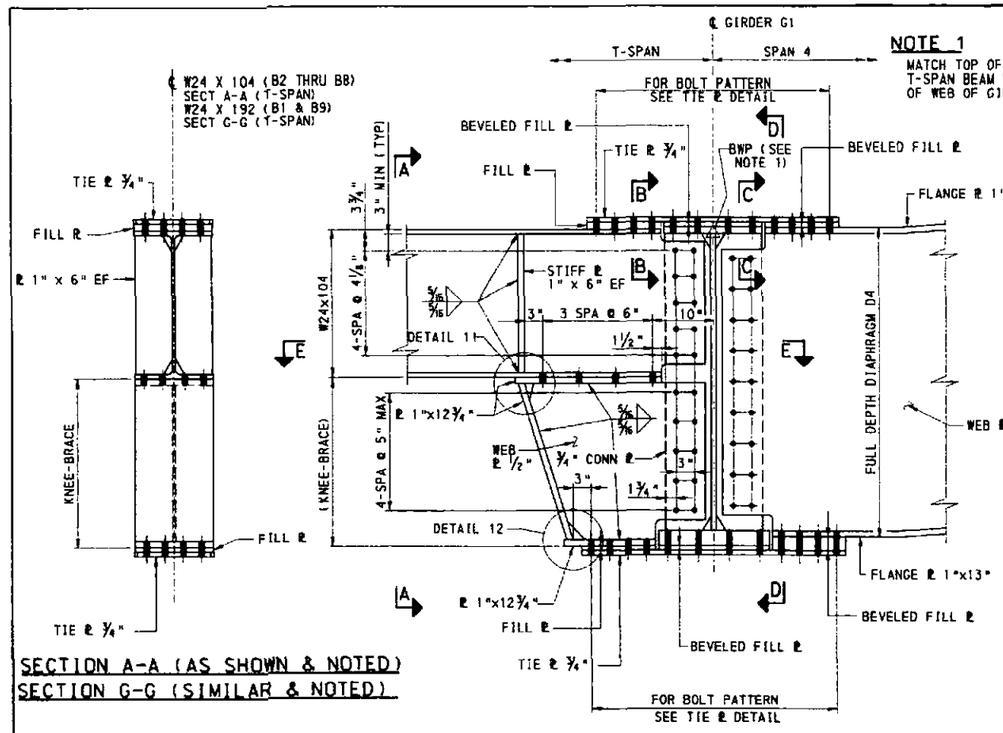

SECTION A-A (AS SHOWN & NOTED)
SECTION G-G (SIMILAR & NOTED)

NOTE 1
MATCH TOP OF WEB OF T-SPAN BEAM WITH TOP OF WEB OF GIRDER G1

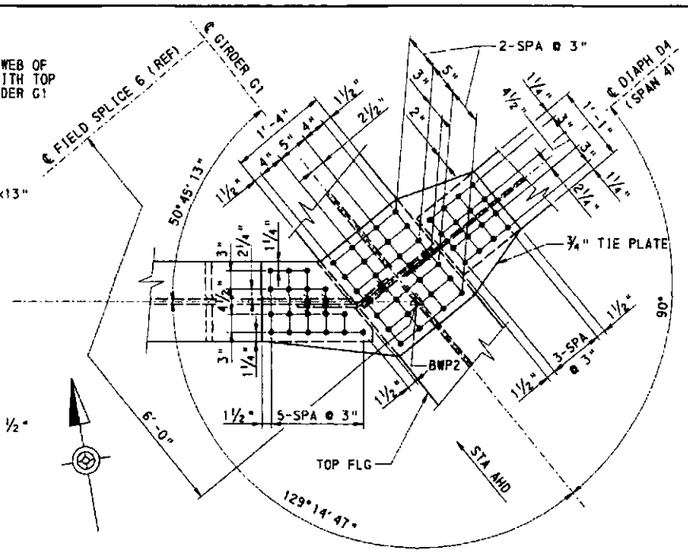

SECTION H-H
(PLAN)

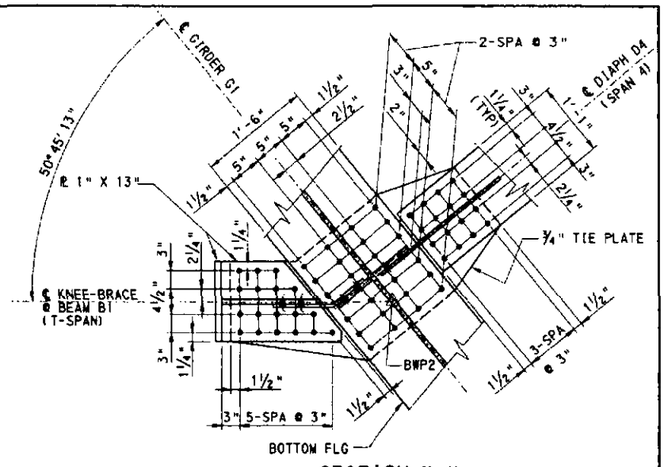

SECTION K-K

NOTES:

- FOR GENERAL NOTES SHEETS 5 & 6
- FOR LOCATION OF DETAILS 2,8 & DIAPHRAGMS SEE FRAMING PLAN SHEET 40
- FOR GIRDER ELEVATIONS SEE SHEETS 41 & 42
- FOR DETAILS 11 & 12 SEE SHEET 45
- FOR TIE PLATE DETAILS BEAMS B2 THRU B8 SEE STEEL DIAPHRAGM DETAIL 2 SHEET 54
- FOR SLAB HAUNCH THICKNESS TABLE SEE DECK PLAN 4 SHEET 69
- FOR ADDITIONAL DIAPHRAGM DETAILS NOT SHOWN SEE STANDARD DRAWING BC-754M
- ALL TIE PLATES TO CONFORM TO THE CHARPY V-NOTCH REQUIREMENTS.
- ALL BOLT HOLES 15/16"ø FOR ⅞"ø A325 HS BOLTS UNLESS NOTED.

LEGEND

EF EACH FACE
BWP BEAM WORK POINT
* SEE "SLAB HAUNCH THICKNESS "A" TABLE T-SPAN"

ELEVATION TYP CONNECTION T-SPAN TO SPAN 4 GIRDER G1
(TYP FOR T-SPAN BEAMS B2 THRU B8)
DETAIL 8

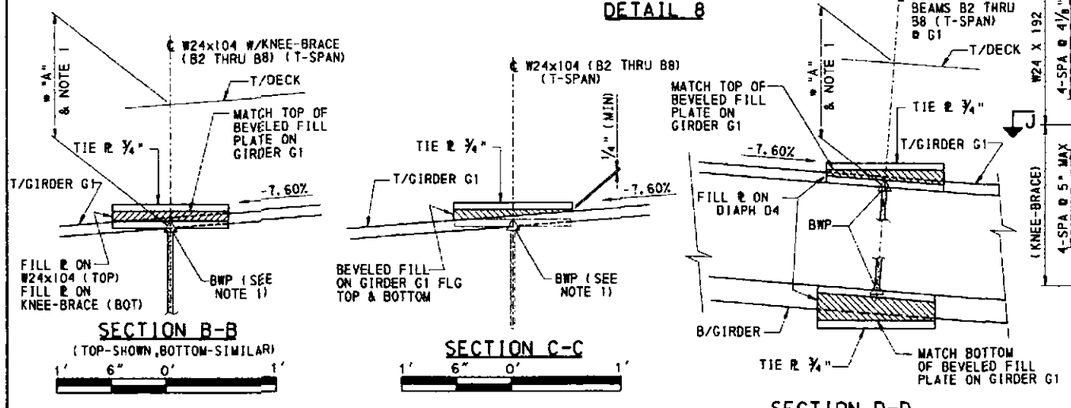

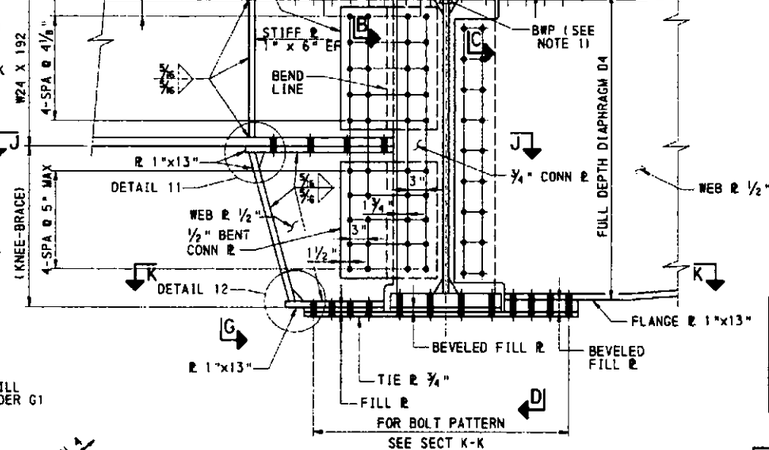

ELEVATION
(CONNECTION BEAM B1 T-SPAN AND DIAPHRAGM D4 TO GIRDER G1)
(SHOWN DEVELOPED)
DETAIL 2

1' 0' 1'
UNLESS NOTED

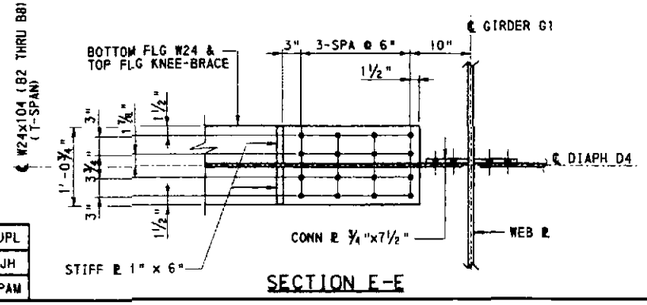

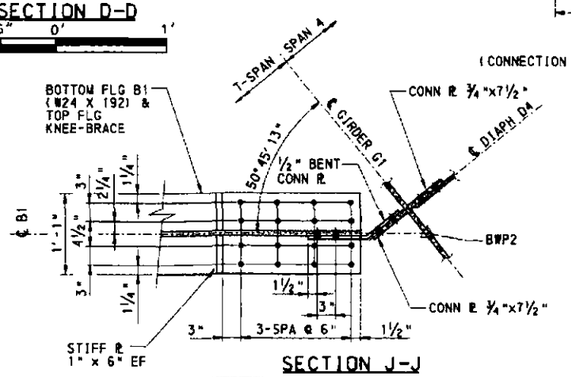

Mark	Description	By	Chk'd.	Recm'd.	Date
REVISIONS					

DESIGNED BY	JPL
DRAWN BY	JH
CHECKED BY	PAM

COMMONWEALTH OF PENNSYLVANIA
DEPARTMENT OF TRANSPORTATION

ARMSTRONG COUNTY
SR 1038 SECTION 150
SEG 0040 OFFSET 1110
SR 1038-150 STA 1956+35.83 AND SR 4025 OVER BUFFALO AND PITTSBURGH RAILROAD
4 SPAN STEEL MULTI-GIRDER BRIDGE AND SINGLE SPAN ROLLED BEAM T-SPAN
T-SPAN GIRDER DETAILS 3

COMMONWEALTH OF PENNSYLVANIA REGISTERED PROFESSIONAL KEITH A. MICHAEL ENGINEER

RECOMMENDED _____

SHEET 47 OF 97
S-27038

A-00122496

		ABUT. 1				SPAN 1							PIER 1					SPAN 2									PIER 2
GIRDER 1	TYPE OF CAMBER	0.0	0.1	0.2	0.3	0.4	0.5	0.6	FIELD SPLICE	0.7	0.8	0.9	1.0	1.1	1.2	FIELD SPLICE	1.3	1.4	1.5	1.6	1.7	FIELD SPLICE	1.8	1.9	2.0
	STEEL (IN)	0.000	0.184	0.335	0.435	0.476	0.456	0.383	0.278	0.238	0.131	0.058	0.000	0.081	0.252	0.331	0.439	0.477	0.523	0.478	0.368	0.283	0.221	0.076	0.000
	CONCRETE (IN)	0.000	0.742	1.352	1.758	1.924	1.843	1.549	1.252	1.139	0.627	0.200	0.000	0.282	0.876	1.150	1.525	1.936	2.125	1.942	1.495	1.135	0.872	0.301	0.000
	SUPERIMPOSED DL (IN)	0.000	0.155	0.776	0.357	0.391	0.381	0.329	0.268	0.245	0.143	0.049	0.000	0.076	0.204	0.258	0.332	0.420	0.457	0.425	0.341	0.268	0.215	0.084	0.000
	GEOMETRIC (IN)	0.000	0.888	1.028	0.900	0.771	0.643	0.514	0.421	0.386	0.257	0.129	0.000	0.378	0.756	0.916	1.134	1.512	1.890	2.268	2.646	2.325	1.919	0.960	0.000
	TOTAL (IN)	0.000	1.969	2.991	3.450	3.562	3.323	2.775	2.219	2.008	1.158	0.436	0.000	0.817	2.088	2.655	3.430	4.345	4.995	5.113	4.850	4.011	3.227	1.421	0.000
		PIER 2				SPAN 3							PIER 3					SPAN 4									ABUT. 2
GIRDER 1	TYPE OF CAMBER	2.0	2.1	2.2	FIELD SPLICE	2.3	2.4	2.5	2.6	2.7	FIELD SPLICE	2.8	2.9	3.0	3.1	3.2	FIELD SPLICE	3.3	3.4	3.5	3.6	3.7	3.8	3.9	4.0
	STEEL (IN)	0.000	0.056	0.198	0.218	0.289	0.384	0.421	0.378	0.279	0.225	0.213	0.061	0.000	0.072	0.225	0.343	0.403	0.563	0.678	0.710	0.648	0.495	0.266	0.000
	CONCRETE (IN)	0.000	0.167	0.589	0.709	1.136	1.509	1.654	1.486	1.096	0.636	0.534	0.154	0.000	0.142	0.445	0.892	0.815	1.140	1.373	1.439	1.312	1.003	0.538	0.000
	SUPERIMPOSED DL (IN)	0.000	0.042	0.132	0.152	0.225	0.286	0.305	0.269	0.194	0.116	0.098	0.021	0.000	0.076	0.181	0.236	0.264	0.329	0.375	0.382	0.340	0.253	0.131	0.000
	GEOMETRIC (IN)	0.000	-0.907	-1.509	-1.462	-1.423	-1.315	-1.139	-0.891	-0.569	-0.248	-0.240	-0.154	0.000	-0.331	-0.615	-0.778	-0.954	-1.453	-1.911	-2.327	-2.455	-1.665	-0.843	0.000
	TOTAL (IN)	0.000	-0.642	-0.590	-0.383	0.227	0.864	1.241	1.242	1.000	0.729	0.605	0.082	0.000	-0.041	0.236	0.493	0.528	0.579	0.515	0.204	-0.155	0.086	0.092	0.000
		ABUT. 1				SPAN 1							PIER 1					SPAN 2									PIER 2
GIRDER 2	TYPE OF CAMBER	0.0	0.1	0.2	0.3	0.4	0.5	0.6	FIELD SPLICE	0.7	0.8	0.9	1.0	1.1	1.2	FIELD SPLICE	1.3	1.4	1.5	1.6	1.7	FIELD SPLICE	1.8	1.9	2.0
	STEEL (IN)	0.000	0.173	0.316	0.410	0.449	0.431	0.363	0.264	0.227	0.125	0.056	0.000	0.075	0.180	0.236	0.312	0.452	0.495	0.452	0.346	0.263	0.202	0.068	0.000
	CONCRETE (IN)	0.000	0.797	1.450	1.885	2.063	1.980	1.668	1.348	1.226	0.680	0.205	0.000	0.272	0.905	1.186	1.571	2.006	2.198	2.004	1.538	1.167	0.896	0.301	0.000
	SUPERIMPOSED DL (IN)	0.000	0.064	0.120	0.158	0.174	0.166	0.137	0.105	0.093	0.045	0.010	0.000	0.031	0.095	0.124	0.164	0.216	0.240	0.219	0.169	0.129	0.100	0.036	0.000
	GEOMETRIC (IN)	0.000	0.507	0.587	0.514	0.441	0.367	0.294	0.241	0.220	0.147	0.073	0.000	0.216	0.432	0.523	0.648	0.864	1.079	1.295	1.511	1.328	1.096	0.548	0.000
	TOTAL (IN)	0.000	1.541	2.473	2.967	3.127	2.944	2.462	1.958	1.766	0.998	0.344	0.000	0.594	1.612	2.069	2.695	3.538	4.012	3.970	3.564	2.887	2.294	0.953	0.000
		PIER 2				SPAN 3							PIER 3					SPAN 4									ABUT. 2
GIRDER 2	TYPE OF CAMBER	2.0	2.1	2.2	FIELD SPLICE	2.3	2.4	2.5	2.6	2.7	FIELD SPLICE	2.8	2.9	3.0	3.1	3.2	FIELD SPLICE	3.3	3.4	3.5	3.6	3.7	3.8	3.9	4.0
	STEEL (IN)	0.000	0.062	0.207	0.228	0.294	0.389	0.427	0.386	0.289	0.238	0.227	0.069	0.000	0.070	0.227	0.346	0.404	0.566	0.681	0.712	0.649	0.496	0.266	0.000
	CONCRETE (IN)	0.000	0.210	0.699	0.834	1.322	1.748	1.918	1.735	1.299	0.781	0.661	0.200	0.000	0.148	0.480	0.755	0.889	1.244	1.496	1.565	1.427	1.090	0.585	0.000
	SUPERIMPOSED DL (IN)	0.000	0.008	0.042	0.052	0.087	0.119	0.129	0.108	0.064	0.026	0.017	-0.011	0.000	0.045	0.116	0.167	0.192	0.256	0.298	0.303	0.270	0.201	0.105	0.000
	GEOMETRIC (IN)	0.000	-0.525	-0.863	-0.834	-0.859	-0.831	-0.735	-0.567	-0.324	-0.071	-0.077	-0.073	0.000	-0.175	-0.304	-0.363	-0.465	-0.831	-1.134	-1.385	-1.473	-1.011	-0.516	0.000
	TOTAL (IN)	0.000	-0.247	0.085	0.278	0.844	1.423	1.739	1.660	1.328	0.974	0.828	0.185	0.000	0.088	0.519	0.905	1.000	1.235	1.341	1.185	0.873	0.776	0.440	0.000
		ABUT. 1				SPAN 1							PIER 1					SPAN 2									PIER 2
GIRDER 3	TYPE OF CAMBER	0.0	0.1	0.2	0.3	0.4	0.5	0.6	FIELD SPLICE	0.7	0.8	0.9	1.0	1.1	1.2	FIELD SPLICE	1.3	1.4	1.5	1.6	1.7	FIELD SPLICE	1.8	1.9	2.0
	STEEL (IN)	0.000	0.177	0.323	0.420	0.460	0.442	0.373	0.271	0.233	0.130	0.059	0.000	0.074	0.179	0.236	0.313	0.442	0.483	0.439	0.335	0.255	0.197	0.064	0.000
	CONCRETE (IN)	0.000	0.815	1.483	1.929	2.112	2.029	1.711	1.385	1.260	0.702	0.214	0.000	0.269	0.902	1.186	1.574	2.024	2.215	2.014	1.536	1.158	0.879	0.287	0.000
	SUPERIMPOSED DL (IN)	0.000	0.041	0.077	0.100	0.110	0.104	0.084	0.064	0.057	0.028	0.006	0.005	0.022	0.064	0.084	0.111	0.146	0.161	0.147	0.113	0.086	0.066	0.024	0.000
	GEOMETRIC (IN)	0.000	0.109	0.127	0.111	0.095	0.079	0.063	0.052	0.048	0.032	0.016	0.000	0.047	0.093	0.113	0.140	0.186	0.233	0.280	0.326	0.287	0.237	0.118	0.000
	TOTAL (IN)	0.000	1.142	2.010	2.560	2.777	2.654	2.231	1.772	1.598	0.892	0.295	0.005	0.412	1.238	1.619	2.138	2.798	3.092	2.880	2.310	1.784	1.379	0.493	0.000
		PIER 2				SPAN 3							PIER 3					SPAN 4									ABUT. 2
GIRDER 3	TYPE OF CAMBER	2.0	2.1	2.2	FIELD SPLICE	2.3	2.4	2.5	2.6	2.7	FIELD SPLICE	2.8	2.9	3.0	3.1	3.2	FIELD SPLICE	3.3	3.4	3.5	3.6	3.7	3.8	3.9	4.0
	STEEL (IN)	0.000	0.071	0.228	0.249	0.327	0.431	0.475	0.434	0.331	0.244	0.223	0.069	0.000	0.045	0.147	0.229	0.268	0.373	0.447	0.467	0.425	0.325	0.174	0.000
	CONCRETE (IN)	0.000	0.241	0.770	0.915	1.446	1.908	2.102	1.919	1.463	0.931	0.802	0.248	0.000	0.185	0.608	0.946	1.107	1.541	1.846	1.928	1.755	1.341	0.720	0.000
	SUPERIMPOSED DL (IN)	0.000	0.006	0.031	0.038	0.063	0.086	0.093	0.078	0.048	0.022	0.016	-0.007	0.000	0.035	0.088	0.126	0.145	0.193	0.225	0.230	0.205	0.153	0.080	0.000
	GEOMETRIC (IN)	0.000	-0.115	-0.185	-0.174	-0.266	-0.323	-0.311	-0.227	-0.068	0.116	0.093	0.012	0.000	-0.020	0.007	0.053	-0.017	-0.208	-0.358	-0.464	-0.491	-0.356	-0.189	0.000
	TOTAL (IN)	0.000	0.203	0.844	1.028	1.570	2.102	2.359	2.204	1.774	1.313	1.134	0.322	0.000	0.245	0.850	1.354	1.503	1.899	2.160	2.161	1.894	1.463	0.785	0.000
		ABUT. 1				SPAN 1							PIER 1					SPAN 2									PIER 2
GIRDER 4	TYPE OF CAMBER	0.0	0.1	0.2	0.3	0.4	0.5	0.6	FIELD SPLICE	0.7	0.8	0.9	1.0	1.1	1.2	FIELD SPLICE	1.3	1.4	1.5	1.6	1.7	FIELD SPLICE	1.8	1.9	2.0
	STEEL (IN)	0.000	0.176	0.321	0.418	0.457	0.440	0.371	0.271	0.232	0.130	0.059	0.000	0.071	0.175	0.230	0.306	0.432	0.472	0.428	0.324	0.246	0.188	0.060	0.000
	CONCRETE (IN)	0.000	0.810	1.474	1.918	2.101	2.019	1.704	1.380	1.257	0.702	0.216	0.000	0.260	0.880	1.158	1.539	1.979	2.164	1.961	1.487	1.113	0.841	0.266	0.000
	SUPERIMPOSED DL (IN)	0.000	0.054	0.100	0.131	0.144	0.138	0.116	0.092	0.082	0.044	0.013	0.000	0.025	0.073	0.094	0.124	0.161	0.177	0.161	0.123	0.093	0.072	0.024	0.000
	GEOMETRIC (IN)	0.000	-0.288	-0.334	-0.292	-0.250	-0.209	-0.167	-0.137	-0.125	-0.083	-0.042	0.000	-0.123	-0.245	-0.297	-0.368	-0.491	-0.614	-0.736	-0.859	-0.755	-0.623	-0.312	0.000
	TOTAL (IN)	0.000	0.752	1.561	2.175	2.452	2.388	2.024	1.606	1.446	0.793	0.246	0.000	0.233	0.883	1.185	1.601	2.081	2.199	1.814	1.075	0.697	0.478	0.038	0.000
		PIER 2				SPAN 3							PIER 3					SPAN 4									ABUT. 2
GIRDER 4	TYPE OF CAMBER	2.0	2.1	2.2	FIELD SPLICE	2.3	2.4	2.5	2.6	2.7	FIELD SPLICE	2.8	2.9	3.0	3.1	3.2	FIELD SPLICE	3.3	3.4	3.5	3.6	3.7	3.8	3.9	4.0
	STEEL (IN)	0.000	0.078	0.243	0.265	0.346	0.456	0.503	0.461	0.354	0.264	0.242	0.076	0.000	0.044	0.149	0.234	0.274	0.383	0.459	0.479	0.436	0.333	0.179	0.000
	CONCRETE (IN)	0.000	0.265	0.820	0.970	1.533	2.018	2.226	2.038	1.567	1.009	0.868	0.275	0.000	0.182	0.616	0.968	1.131	1.583	1.898	1.979	1.801	1.375	0.739	0.000
	SUPERIMPOSED DL (IN)	0.000	0.018	0.059	0.069	0.106	0.138	0.150	0.134	0.099	0.062	0.052	0.010	0.000	0.027	0.075	0.111	0.128	0.172	0.200	0.205	0.182	0.136	0.072	0.000
	GEOMETRIC (IN)	0.000	0.303	0.496	0.489	0.329	0.187	0.114	0.114	0.190	0.305	0.264	0.097	0.000	0.136	0.318	0.471	0.451	0.414	0.419	0.468	0.490	0.298	0.138	0.000
	TOTAL (IN)	0.000	0.664	1.618	1.793	2.314	2.799	2.993	2.747	2.210	1.640	1.426	0.458	0.000	0.389	1.158	1.784	1.984	2.552	2.974	3.131	2.909	2.142	1.128	0.000
		ABUT. 1				SPAN 1							PIER 1					SPAN 2									PIER 2
GIRDER 5	TYPE OF CAMBER	0.0	0.1	0.2	0.3	0.4	0.5	0.6	FIELD SPLICE	0.7	0.8	0.9	1.0	1.1	1.2	FIELD SPLICE	1.3	1.4	1.5	1.6	1.7	FIELD SPLICE	1.8	1.9	2.0
	STEEL (IN)	0.000	0.189	0.345	0.449	0.492	0.473	0.399	0.291	0.250	0.139	0.064	0.000	0.074	0.184	0.242	0.322	0.456	0.498	0.450	0.338	0.255	0.194	0.059	0.000
	CONCRETE (IN)	0.000	0.765	1.395	1.815	1.990	1.912	1.614	1.310	1.195	0.667	0.203	0.000	0.238	0.820	1.082	1.441	1.852	2.023	1.826	1.373	1.022	0.765	0.232	0.000
	SUPERIMPOSED DL (IN)	0.000	0.100	0.179	0.232	0.255	0.250	0.218	0.178	0.153	0.097	0.035	0.000	0.043	0.119	0.151	0.194	0.245	0.264	0.243	0.191	0.147	0.116	0.041	0.000
	GEOMETRIC (IN)	0.000	-0.444	-0.514	-0.450	-0.386	-0.321	-0.257	-0.211	-0.193	-0.129	-0.064	0.000	-0.189	-0.378	-0.458	-0.567	-0.758	-0.945	-1.134	-1.323	-1.162	-0.960	-0.480	0.000
	TOTAL (IN)	0.000	0.810	1.405	2.048	2.351	2.314	1.974	1.568	1.415	0.774	0.238	0.000	0.166	0.745	1.017	1.390	1.797	1.840	1.385	0.579	0.262	0.115	-0.148	0.000
		PIER 2				SPAN 3							PIER 3					SPAN 4									ABUT. 2
GIRDER 5	TYPE OF CAMBER	2.0	2.1	2.2	FIELD SPLICE	2.3	2.4	2.5	2.6	2.7	FIELD SPLICE	2.8	2.9	3.0	3.1	3.2	FIELD SPLICE	3.3	3.4	3.5	3.6	3.7	3.8	3.9	4.0
	STEEL (IN)	0.000	0.091	0.277	0.301	0.393	0.517	0.570	0.522	0.403	0.305	0.280	0.094	0.000	0.041	0.147	0.236	0.276	0.390	0.469	0.490	0.446	0.341	0.183	0.000
	CONCRETE (IN)	0.000	0.272	0.823	0.974	1.546	2.032	2.242	2.052	1.583	1.032	0.887	0.298	0.000	0.164	0.591	0.946	1.107	1.565	1.881	1.967	1.791	1.367	0.735	0.000
	SUPERIMPOSED DL (IN)	0.000	0.047	0.126	0.143	0.206	0.259	0.280	0.258	0.206	0.144	0.128	0.047	0.000	0.030	0.091	0.136	0.156	0.209	0.242	0.247	0.221	0.166	0.088	0.000
	GEOMETRIC (IN)	0.000	0.419	0.681	0.667	0.545	0.420	0.328	0.271	0.254	0.270	0.238	0.103	0.000	0.185	0.393	0.551	0.580	0.682	0.802	0.943	0.988	0.634	0.304	0.000
	TOTAL (IN)	0.000	0.829	1.907	2.085	2.690	3.228	3.420	3.103	2.446	1.751	1.533	0.542	0.000	0.420	1.222	1.869	2.119	2.846	3.394	3.647	3.446	2.508	1.310	0.000

DESIGNED BY	RES
DRAWN BY	CB
CHECKED BY	MP

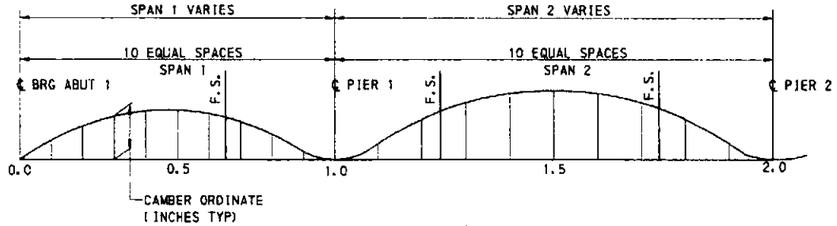

CAMBER DIAGRAM
SPANS 1 & 2

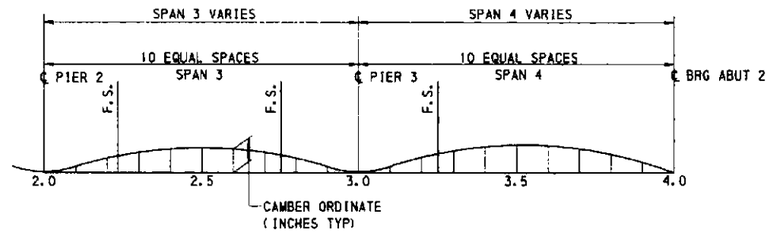

CAMBER DIAGRAM
SPANS 3 & 4

NOTES

- SUPERIMPOSED DEAD LOAD INCLUDES BARRIERS BUT DOES NOT INCLUDE FUTURE WEARING SURFACE.
- FOR LOCATION OF GIRDERS SEE FRAMING PLAN SHEETS 39 AND 40.

Mark	Description	By	Chk'd.	Recm'd.	Date
REVISIONS					

COMMONWEALTH OF PENNSYLVANIA
DEPARTMENT OF TRANSPORTATION

ARMSTRONG COUNTY
SR 1038 SECTION 150
SEG 0040 OFFSET 1110
SR 1038-150 STA 1956+35.83 AND SR 4025 OVER
BUFFALO AND PITTSBURGH RAILROAD
4 SPAN STEEL MULTI-GIRDER BRIDGE AND
SINGLE SPAN ROLLED BEAM T-SPAN
CAMBER TABLE SR1038

COMMONWEALTH OF PENNSYLVANIA
REGISTERED
PROFESSIONAL
KEITH A. MICHAEL
ENGINEER
ANNUAL

RECOMMENDED _____ Editor

SHEET 48 OF 97

S-27038

A-00122496

N:\Projects\4324\structure\Civil\engineering\final\camber tables.dgn 7/3/2007

MOMENT TABLE EXTERIOR GIRDER SR1038

		ABUT. 1	SPAN 1									PIER 1	SPAN 2									PIER 2
GIRDER 1	GIRDER MOMENT DUE TO	0.0	0.1	0.2	0.3	0.4	0.5	0.6	0.7	0.8	0.9	1.0	1.1	1.2	1.3	1.4	1.5	1.6	1.7	1.8	1.9	2.0
	DC1	0	679	1141	1387	1417	1231	829	205	-625	-1666	-2929	-1411	-232	813	1126	1305	1149	659	-167	-1329	-2838
	DC2	0	232	388	468	467	391	238	8	-299	-684	-1145	-544	-62	300	542	664	667	551	315	-48	-517
	TOTAL DEAD LOAD	0	911	1529	1853	1884	1622	1067	213	-924	-2349	-4074	-1955	-294	912	1668	1970	1817	1210	148	-1377	-3355
	PHL 93 (+)	0	1144	1955	2450	2676	2644	2377	1876	1224	598	475	645	1323	2049	2537	2695	2569	2096	1403	735	544
	PHL 93 (-)	0	-183	-365	-548	-730	-913	-1095	-1278	-1725	-2107	-3274	-1879	-1340	-963	-855	-780	-928	-1076	-1502	-2049	-3439
	P82 (+)	0	1709	2892	3567	3757	3640	3320	2577	1478	634	705	644	1843	2950	3570	3701	3555	2922	1811	637	640
	P82 (-)	0	-265	-530	-795	-1060	-1325	-1590	-1855	-2079	-2339	-2599	-1985	-1682	-1376	-1068	-894	-1209	-1524	-1841	-2156	-2628
	T-SPAN LIVE LOAD	0	-5	-10	-15	-19	-24	-29	-34	-39	-44	-49	-26	-4	19	41	63	85	108	130	145	175

		PIER 2	SPAN 3									PIER 3	SPAN 4									ABUT. 2
GIRDER 1	GIRDER MOMENT DUE TO	2.0	2.1	2.2	2.3	2.4	2.5	2.6	2.7	2.8	2.9	3.0	3.1	3.2	3.3	3.4	3.5	3.6	3.7	3.8	3.9	4.0
	DC1	-2838	-1420	-341	412	841	946	727	184	-683	-1884	-3438	-1892	-579	422	1179	1678	1903	1841	1493	872	0
	DC2	-517	-221	-42	21	-33	-203	-491	-900	-1431	-2084	-2857	-1101	578	1776	2776	3412	3413	2966	2206	1193	0
	TOTAL DEAD LOAD	-3355	-1642	-383	433	808	744	237	-716	-2114	-3968	-6295	-2993	-1	2198	3956	5090	5316	4807	3699	2065	0
	PHL 93 (+)	544	746	1411	2076	2501	2605	2421	1922	1242	630	562	654	1285	1912	2383	2630	2652	2421	1929	1128	0
	PHL 93 (-)	-3439	-2078	-1588	-1132	-959	-786	-820	-907	-1276	-1945	-3339	-2234	-1872	-1386	-1188	-990	-792	-594	-396	-198	0
	P82 (+)	640	646	1817	2881	3463	3573	3402	2757	1658	595	832	749	1524	2590	3294	3588	3708	3512	2843	1678	0
	P82 (-)	-2628	-2285	-1942	-1601	-1258	-915	-1035	-1303	-1600	-1873	-2818	-2536	-2255	-2011	-1724	-1437	-1149	-862	-575	-287	0
	T-SPAN LIVE LOAD	175	95	15	-65	-145	-225	-305	-385	-465	-545	-625	-231	164	559	954	1196	1067	800	533	267	0

MOMENT TABLE INTERIOR GIRDER SR1038

		ABUT. 1	SPAN 1									PIER 1	SPAN 2									PIER 2
GIRDER 4	GIRDER MOMENT DUE TO	0.0	0.1	0.2	0.3	0.4	0.5	0.6	0.7	0.8	0.9	1.0	1.1	1.2	1.3	1.4	1.5	1.6	1.7	1.8	1.9	2.0
	DC1	0	738	1244	1516	1555	1361	935	269	-619	-1735	-3090	-1484	-244	636	1159	1321	1122	563	-358	-1642	-3299
	DC2	0	229	386	470	483	423	291	87	-189	-537	-958	-437	-34	253	422	474	409	226	-73	-498	-1024
	TOTAL DEAD LOAD	0	967	1629	1986	2038	1784	1226	356	-808	-2272	-4048	-1921	-277	889	1581	1795	1531	789	-431	-2140	-4322
	PHL 93 (+)	0	1112	1900	2382	2603	2573	2315	1830	1198	591	484	632	1285	1993	2470	2628	2501	2056	1382	729	532
	PHL 93 (-)	0	-178	-356	-534	-712	-890	-1068	-1246	-1683	-2052	-3185	-1828	-1302	-940	-841	-788	-942	-1097	-1530	-2041	-3392
	P82 (+)	0	1659	2807	3463	3648	3534	3224	2502	1436	645	716	625	1788	2867	3474	3605	3467	2859	1783	628	611
	P82 (-)	0	-258	-516	-774	-1032	-1290	-1548	-1806	-2024	-2278	-2531	-1926	-1643	-1337	-1058	-908	-1228	-1549	-1868	-2188	-2511

		PIER 2	SPAN 3									PIER 3	SPAN 4									ABUT. 2
GIRDER 4	GIRDER MOMENT DUE TO	2.0	2.1	2.2	2.3	2.4	2.5	2.6	2.7	2.8	2.9	3.0	3.1	3.2	3.3	3.4	3.5	3.6	3.7	3.8	3.9	4.0
	DC1	-3299	-1638	-356	564	1120	1313	1143	610	-285	-1540	-3186	-1784	-645	259	929	1363	1562	1525	1252	744	0
	DC2	-1024	-491	-77	218	396	455	399	230	-52	-447	-955	-531	-180	97	302	434	493	479	392	233	0
	TOTAL DEAD LOAD	-4322	-2129	-432	782	1516	1768	1542	840	-337	-1987	-4121	-2315	-825	357	1231	1797	2055	2004	1644	977	0
	PHL 93 (+)	532	732	1388	2060	2499	2618	2450	1961	1257	618	502	625	1253	1882	2360	2610	2635	2407	1919	1122	0
	PHL 93 (-)	-3392	-2037	-1527	-995	-933	-774	-819	-913	-1271	-1854	-3231	-2110	-1760	-1303	-1117	-931	-745	-559	-372	-186	0
	P82 (+)	611	631	1790	2861	3461	3592	3444	2819	1728	601	743	669	1511	2573	3279	3580	3697	3500	2833	1672	0
	P82 (-)	-2511	-2188	-1865	-1542	-1219	-897	-1030	-1301	-1599	-1874	-2644	-2379	-2115	-1886	-1617	-1347	-1078	-808	-538	-270	0

MOMENT TABLE SR4025

	GIRDER MOMENT DUE TO	0.0	0.1	0.2	0.3	0.4	0.5	0.6	0.7	0.8	0.9	1.0
BEAM 1	DC1	0	159	294	407	497	564	535	480	402	217	0
	DC2	0	118	209	275	314	327	314	275	209	118	0
	TOTAL DEAD LOAD	0	277	504	682	811	891	849	755	611	335	0
	PHL 93 (+)	0	172	304	396	449	463	449	396	304	172	0
	P82 (+)	0	228	385	480	527	543	527	480	385	228	0
	ADD'T. LIVE LOAD	0	207	389	547	680	789	740	660	556	296	0

	GIRDER MOMENT DUE TO	0.0	0.1	0.2	0.3	0.4	0.5	0.6	0.7	0.8	0.9	1.0
BEAM 5	DC1	0	103	184	241	275	287	275	241	184	103	0
	DC2	0	18	31	41	47	49	47	41	31	18	0
	TOTAL DEAD LOAD	0	121	215	282	322	335	322	282	215	121	0
	PHL 93 (+)	0	274	484	630	712	730	712	630	484	274	0
	P82 (+)	0	324	562	734	842	863	842	734	562	324	0

LEGEND:

DC1 = NON-COMPOSITE DEAD LOAD 1 (INCLUDES STEEL, DECK, AND FORMS)

DC2 = COMPOSITE DEAD LOAD 2 (INCLUDES PARAPETS AND FUTURE WEARING SURFACE)

TOTAL DEAD LOAD = DC1 + DC2.

(+) PHL-93 = MAXIMUM POSITIVE (LL+I) VALUES DUE TO PHL-93 LOADING.

(-) PHL-93= MAXIMUM NEGATIVE (LL+I) VALUES DUE TO PHL-93 LOADING.

(+) P-82 = MAXIMUM POSITIVE (LL+I) VALUES DUE TO P-82 LOADING

(-) P-82 = MAXIMUM NEGATIVE (LL+I) VALUES DUE TO P-82 LOADING

NOTES:

- FOR LOCATION OF GIRDERS SEE FRAMING PLANS SHEETS 39 & 40.
- MOMENTS ARE UNFACTORED.
- ALL MOMENT VALUES ARE KIP FT, BASED ON GOVERNING GIRDERS.
- LIVE LOAD DISTRIBUTION FACTORS ARE BASED ON DESIGN MANUAL, PART 4.

Mark	Description	By	Chk'd.	Recm'd.	Date
	REVISIONS				

DESIGNED BY	RES
DRAWN BY	CB
CHECKED BY	MP

COMMONWEALTH OF PENNSYLVANIA
DEPARTMENT OF TRANSPORTATION

ARMSTRONG COUNTY
SR 1038 SECTION 150
SEG 0040 OFFSET 1110
SR 1038-150 STA 1956+35.83 AND SR 4025 OVER BUFFALO AND PITTSBURGH RAILROAD
4 SPAN STEEL MULTI-GIRDER BRIDGE AND SINGLE SPAN ROLLED BEAM T-SPAN
MOMENT TABLES

RECOMMENDED _____

SHEET 49 OF 97

S-27038

A-00122496

SHEAR TABLE EXTERIOR GIRDER SR1038

		ABUT. 1	SPAN 1									PIER 1	PIER 1	SPAN 2									PIER 2
GIRDER 1	GIRDER SHEAR DUE TO	0.0	0.1	0.2	0.3	0.4	0.5	0.6	0.7	0.8	0.9	1.0	1.0	1.1	1.2	1.3	1.4	1.5	1.6	1.7	1.8	1.9	2.0
	DC1	68	49	31	12	-7	-25	-44	-62	-81	-99	-119	117	94	70	47	24	1	-22	-46	-69	-91	-117
	DC2	23	17	10	3	-3	-10	-17	-23	-30	-36	-43	46	38	29	21	13	4	-4	-12	-21	-28	-37
	TOTAL DEAD LOAD	91	66	41	15	-10	-35	-61	-85	-110	-136	-162	163	131	99	68	37	5	-26	-58	-89	-120	-154
	PHL 93 (+)	108	91	76	61	48	36	26	18	11	5	4	129	114	98	82	66	51	38	27	18	14	14
	PHL 93 (-)	-15	-15	-25	-36	-47	-60	-73	-87	-100	-113	-126	-15	-15	-18	-28	-39	-52	-67	-82	-98	-114	-129
	P82 (+)	167	141	116	92	69	49	32	19	10	6	6	190	169	145	120	95	70	47	27	20	20	20
	P82 (-)	-22	-22	-22	-36	-56	-80	-105	-129	-151	-171	-189	-22	-22	-22	-28	-48	-71	-96	-121	-146	-169	-190
	T-SPAN LIVE LOAD	0	0	0	0	0	0	0	0	0	0	0	2	2	2	2	2	2	2	2	2	2	2

		PIER 2	SPAN 3									PIER 3	PIER 3	SPAN 4									ABUT. 2
GIRDER 1	GIRDER SHEAR DUE TO	2.0	2.1	2.2	2.3	2.4	2.5	2.6	2.7	2.8	2.9	3.0	3.0	3.1	3.2	3.3	3.4	3.5	3.6	3.7	3.8	3.9	4.0
	DC1	112	88	64	42	19	-4	-27	-49	-72	-96	-122	146	125	106	77	55	32	7	-18	-43	-65	-86
	DC2	25	17	8	0	-8	-16	-24	-33	-42	-50	-59	157	151	144	95	78	20	-26	-53	-79	-97	-110
	TOTAL DEAD LOAD	137	105	73	42	11	-20	-51	-82	-114	-146	-180	303	276	249	172	132	52	-19	-71	-122	-163	-197
	PHL 93 (+)	128	113	97	81	65	51	38	27	18	16	16	125	113	100	87	73	60	48	36	25	17	17
	PHL 93 (-)	-13	-14	-18	-26	-39	-52	-67	-83	-99	-114	-129	-5	-6	-11	-18	-27	-37	-48	-61	-76	-91	-106
	P82 (+)	188	167	143	119	92	68	45	26	24	24	24	188	170	150	128	104	79	55	35	24	24	24
	P82 (-)	-19	-19	-19	-28	-48	-72	-97	-122	-147	-170	-190	-7	-7	-11	-20	-32	-50	-70	-92	-115	-140	-166
	T-SPAN LIVE LOAD	-6	-6	-6	-6	-6	-6	-6	-6	-6	-6	-6	35	35	35	35	35	-3	-23	-23	-23	-23	-23

SHEAR TABLE INTERIOR GIRDER SR1038

		ABUT. 1	SPAN 1									PIER 1	PIER 1	SPAN 2									PIER 2
GIRDER 4	GIRDER SHEAR DUE TO	0.0	0.1	0.2	0.3	0.4	0.5	0.6	0.7	0.8	0.9	1.0	1.0	1.1	1.2	1.3	1.4	1.5	1.6	1.7	1.8	1.9	2.0
	DC1	74	54	34	13	-7	-27	-47	-66	-86	-106	-127	124	99	74	49	24	-1	-26	-51	-76	-100	-126
	DC2	23	17	10	4	-2	-8	-14	-21	-27	-33	-39	40	32	24	16	8	0	-9	-17	-25	-33	-41
	TOTAL DEAD LOAD	97	70	44	18	-9	-35	-61	-87	-113	-139	-167	164	131	97	64	31	-2	-35	-68	-101	-133	-169
	PHL 93 (+)	121	102	84	68	53	41	29	20	12	6	5	144	127	109	91	74	57	43	31	20	16	16
	PHL 93 (-)	-17	-17	-27	-40	-53	-66	-82	-97	-112	-126	-140	-17	-17	-20	-31	-43	-58	-74	-92	-109	-127	-144
	P82 (+)	186	157	129	102	77	55	36	21	11	7	7	211	188	162	134	106	78	52	31	22	22	22
	P82 (-)	-24	-24	-24	-40	-62	-89	-117	-144	-168	-191	-210	-25	-25	-25	-31	-53	-78	-106	-134	-162	-188	-211

		PIER 2	SPAN 3									PIER 3	PIER 3	SPAN 4									ABUT. 2
GIRDER 4	GIRDER SHEAR DUE TO	2.0	2.1	2.2	2.3	2.4	2.5	2.6	2.7	2.8	2.9	3.0	3.0	3.1	3.2	3.3	3.4	3.5	3.6	3.7	3.8	3.9	4.0
	DC1	128	102	76	51	26	1	-24	-49	-74	-98	-125	129	108	88	68	47	27	7	-13	-33	-54	-74
	DC2	41	33	24	16	8	0	-8	-16	-23	-31	-39	39	33	27	21	14	8	2	-4	-11	-17	-23
	TOTAL DEAD LOAD	168	135	100	67	34	1	-32	-65	-97	-129	-164	168	141	115	88	62	35	9	-18	-44	-71	-97
	PHL 93 (+)	144	127	109	91	74	57	43	31	20	17	17	140	126	112	97	82	67	53	40	28	18	18
	PHL 93 (-)	-15	-16	-20	-31	-43	-58	-74	-92	-110	-127	-144	-5	-6	-12	-20	-30	-41	-53	-68	-85	-102	-121
	P82 (+)	211	188	161	134	105	78	52	30	25	25	25	210	190	168	143	117	89	62	40	25	25	25
	P82 (-)	-21	-21	-21	-31	-53	-79	-107	-135	-163	-189	-212	-7	-7	-12	-22	-36	-56	-78	-103	-129	-157	-186

SHEAR TABLE SR4025

	GIRDER SHEAR DUE TO	0.0	0.1	0.2	0.3	0.4	0.5	0.6	0.7	0.8	0.9	1.0
BEAM 1	DC1	32	28	24	19	15	11	-8	-13	-17	-39	-44
	DC2	25	20	15	10	5	0	-5	-10	-15	-20	-25
	TOTAL DEAD LOAD	57	48	39	29	20	11	-13	-23	-32	-59	-69
	PHL 93 (+)	37	32	28	24	20	16	12	9	5	2	0
	PHL 93 (-)	0	-2	-5	-9	-12	-16	-20	-24	-28	-32	-37
	P82 (+)	52	43	35	29	24	19	14	9	5	2	0
	P82 (-)	0	-2	-5	-9	-14	-19	-24	-29	-35	-43	-52
	ADD'T. LIVE LOAD	42	37	32	28	23	18	-13	-18	-22	-54	-59
BEAM 5	GIRDER SHEAR DUE TO	0.0	0.1	0.2	0.3	0.4	0.5	0.6	0.7	0.8	0.9	1.0
	DC1	29	24	18	12	6	0	-6	-12	-18	-24	-29
	DC2	5	4	3	2	1	0	-1	-2	-3	-4	-5
	TOTAL DEAD LOAD	34	28	21	14	7	0	-7	-14	-21	-28	-34
	PHL 93 (+)	81	81	70	60	50	40	31	22	13	4	0
	PHL 93 (-)	0	-4	-13	-22	-31	-40	-50	-60	-70	-81	-91
	P82 (+)	112	97	84	71	58	45	32	19	10	3	0
	P82 (-)	0	-3	-10	-19	-32	-45	-58	-71	-84	-97	-112

LEGEND:

DC1 = NON-COMPOSITE DEAD LOAD 1 (INCLUDES STEEL, DECK, AND FORMS)

DC2 = COMPOSITE DEAD LOAD 2 (INCLUDES PARAPETS AND FUTURE WEARING SURFACE)

TOTAL DEAD LOAD = DC1 + DC2

(+) PHL-93 = MAXIMUM POSITIVE (LL+I) VALUES DUE TO PHL-93 LOADING.

(-) PHL-93= MAXIMUM NEGATIVE (LL+I) VALUES DUE TO PHL-93 LOADING.

(+) P-82 = MAXIMUM POSITIVE (LL+I) VALUES DUE TO P-82 LOADING

(-) P-82 = MAXIMUM NEGATIVE (LL+I) VALUES DUE TO P-82 LOADING

NOTES:

- FOR LOCATION OF GIRDERS SEE FRAMING PLANS SHEETS 39 & 40.
- SHEARS ARE UNFACTORED.
- SHEAR VALUES ARE KIP FT AND ARE BASED ON GOVERNING GIRDERS.
- LIVE LOAD DISTRIBUTION FACTORS ARE BASED ON DESIGN MANUAL, PART 4.

Mark	Description	By	Chk'd.	Recm'd.	Date
	REVISIONS				

DESIGNED BY	RES
DRAWN BY	CB
CHECKED BY	MP

KEITH A MICHAEL — ENGINEER — COMMONWEALTH OF PENNSYLVANIA — PROFESSIONAL

COMMONWEALTH OF PENNSYLVANIA
DEPARTMENT OF TRANSPORTATION

ARMSTRONG COUNTY
SR 1038 SECTION 150
SEG 0040 OFFSET 1110
SR 1038-150 STA 1956+35.83 AND SR 4025 OVER
BUFFALO AND PITTSBURGH RAILROAD
4 SPAN STEEL MULTI-GIRDER BRIDGE AND
SINGLE SPAN ROLLED BEAM T-SPAN
SHEAR TABLES

RECOMMENDED _____

SHEET 50 OF 97

S-27038

A-00122496

n:\proj\sr1038\c43246\roll\new_plan\engineering\final\shear tables.dgn 7/31/2007

GIRDER SECTION PROPERTIES

GIRDER 1

	SECTION NUMBER		①	②	③	④	⑤	⑥	⑦	⑧	⑨	⑩	⑪	⑫
	SLAB	ws x ts x hs	103" x 8 1/2" x 3"	103" x 8 1/2" x 3"	103" x 8 1/2" x 3"	103" x 8 1/2" x 3"	103" x 8 1/2" x 3"	103" x 8 1/2" x 3"	103" x 8 1/2" x 3"	103" x 8 1/2" x 3"	103" x 8 1/2" x 3"	103" x 8 1/2" x 3"	103" x 8 1/2" x 3"	103" x 8 1/2" x 3"
	REBAR	As (IN²) x Hst	1.37 x 4.67"	1.37 x 4.67"	1.37 x 4.67"	1.37 x 4.67"	1.37 x 4.67"	1.37 x 4.67"	1.37 x 4.67"	1.37 x 4.67"	1.37 x 4.67"	1.37 x 4.67"	1.37 x 4.67"	1.37 x 4.67"
	TOP FLANGE	bf x tf	16" x 1 1/16"	16" x 1 1/16"	16" x 2"	16" x 1 1/16"	16" x 1 1/4"	16" x 1 1/2"	16" x 2 1/2"	16" x 1 1/16"	16" x 1 3/4"	16" x 3"	16" x 1 1/2"	16" x 1 1/16"
	WEB	Dw x tw	48" x 9/16"	48" x 9/16"	48" x 9/16"	48" x 9/16"	48" x 1/2"	48" x 5/16"	48" x 9/16"	48" x 1/2"	48" x 3/4"	48" x 3/4"	48" x 3/4"	48" x 11/16"
	BOTT. FLANGE	bf x tf	18" x 2 1/4"	18" x 1 1/2"	18" x 2 3/4"	18" x 1 3/4"	18" x 2 1/4"	18" x 2"	18" x 2 1/4"	18" x 2 1/4"	18" x 2 1/2"	16" x 3"	18" x 2 3/4"	18" x 2 1/2"
	STEEL	I (IN⁴)	37756	31880	55181	34021	39059	41326	62091	37039	48842	73144	45416	40892
	ONLY	C (IN)	19.52	22.36	22.56	21.29	20.04	22.48	24.64	19.28	23.18	25.89	22.04	19.27
		S-top (IN³)	1185	1128	1827	1150	1241	1424	2170	1154	1695	2602	1528	1264
		S-bott (IN³)	1934	1426	2447	1598	1949	1838	2520	1922	2107	2825	2061	2122
	COMPOSITE	I (IN⁴)	74860	60735	89719	65745	75040	72613	93231	74218	80915	103575	79298	80256
	3n=24	C (IN)	30.88	33.92	31.47	32.82	31.33	32.75	32.59	31.00	32.06	32.66	31.48	29.87
		S-top (IN³)	3652	3637	4215	3641	3721	3874	4512	3642	4058	4853	3912	3686
		S-bott (IN³)	2424	1790	2851	2003	2366	2217	2860	2217	2524	3172	2519	2687
	COMPOSITE	I (IN⁴)	107654	83902	124323	92107	106642	100572	129558	106430	112473	137712	111967	117276
	n=8	C (IN)	40.84	43.10	40.35	42.31	41.18	41.85	40.80	41.07	40.74	40.20	40.52	39.77
		S-top (IN³)	10220	11154	10026	10750	10330	10424	10063	10328	9964	9961	9973	9891
		S-bott (IN³)	2638	1947	3081	2177	2590	2403	3078	2591	2761	3425	2783	2949
	REBAR	I (IN⁴)	52340	43545	68203	46717	53224	53547	73682	51749	60990	84198	58345	58068
	COMPOSITE	C (IN)	24.06	27.13	25.97	25.99	24.56	26.57	27.66	23.99	26.61	28.40	25.71	23.42
		S-top (IN³)	1916	1853	2547	1877	1976	2148	2879	1890	2402	3289	2240	1988
		S-bott (IN³)	2175	1605	2626	1798	2167	2015	2664	2157	2292	2965	2270	2394

GIRDER 2

	SECTION NUMBER		①	②	③	④	⑤	⑥	⑦	⑧	⑨	⑩	⑪
	SLAB	ws x ts x hs	110" x 8 1/2" x 3"	110" x 8 1/2" x 3"	110" x 8 1/2" x 3"	110" x 8 1/2" x 3"	110" x 8 1/2" x 3"	110" x 8 1/2" x 3"	110" x 8 1/2" x 3"	110" x 8 1/2" x 3"	110" x 8 1/2" x 3"	110" x 8 1/2" x 3"	110" x 8 1/2" x 3"
	REBAR	As (IN²) x Hst	1.37 x 4.67"	1.37 x 4.67"	1.37 x 4.67"	1.37 x 4.67"	1.37 x 4.67"	1.37 x 4.67"	1.37 x 4.67"	1.37 x 4.67"	1.37 x 4.67"	1.37 x 4.67"	1.37 x 4.67"
	TOP FLANGE	bf x tf	16" x 1 1/16"	16" x 1 1/16"	16" x 2"	16" x 1 1/16"	16" x 1 1/4"	16" x 1 1/2"	16" x 2 1/2"	16" x 1 3/4"	16" x 3"	16" x 1 1/2"	16" x 1 1/16"
	WEB	Dw x tw	48" x 9/16"	48" x 9/16"	48" x 9/16"	48" x 9/16"	48" x 9/16"	48" x 5/16"	48" x 9/16"	48" x 11/16"	48" x 11/16"	48" x 11/16"	48" x 9/16"
	BOTT. FLANGE	bf x tf	18" x 2 1/4"	18" x 1 1/2"	18" x 2 3/4"	18" x 1 3/4"	18" x 2 1/4"	18" x 2"	18" x 2 3/4"	18" x 2 1/4"	16" x 3"	18" x 2 1/4"	18" x 2 1/2"
	STEEL	I (IN⁴)	37756	31880	55181	34021	39747	41326	62091	48236	72565	44785	39406
	ONLY	C (IN)	19.52	22.36	22.55	21.29	20.25	22.48	24.64	23.09	25.87	21.91	18.79
		S-top (IN³)	1185	1128	1827	1150	1272	1424	2170	1668	2579	1501	1200
		S-bott (IN³)	1934	1426	2447	1598	1963	1838	2520	2089	2805	2044	2097
	COMPOSITE	I (IN⁴)	76597	62013	91447	67178	77387	74088	94821	81811	104504	80286	80915
	3n=24	C (IN)	31.41	34.43	31.91	33.34	31.73	33.24	33.00	32.63	33.12	32.07	30.56
		S-top (IN³)	3836	3830	4389	3830	3913	4056	4682	4224	5005	4079	3841
		S-bott (IN³)	2439	1801	2865	2015	2439	2229	2873	2507	3155	2504	2648
	COMPOSITE	I (IN⁴)	109687	85277	126608	93696	109885	102316	127733	113273	138960	112835	117298
	n=8	C (IN)	41.45	43.64	40.93	42.87	41.55	42.41	41.35	41.51	40.89	41.31	40.80
		S-top (IN³)	11056	12209	10713	11707	11046	11260	10730	10793	10602	10809	10836
		S-bott (IN³)	2646	1954	3093	2185	2645	2412	3089	2729	3398	2731	2875
	REBAR	I (IN⁴)	53204	44220	68996	47458	54644	54272	74383	51150	64303	58550	55777
	COMPOSITE	C (IN)	24.33	27.41	26.18	26.26	24.87	26.82	27.84	26.83	28.59	25.92	23.51
		S-top (IN³)	1967	1904	2597	1928	2052	2189	2928	2429	3317	2267	1984
		S-bott (IN³)	2187	1614	2835	1807	2197	2024	2672	2279	2949	2259	2373

NOTES FOR GIRDER SECTION PROPERTIES

- ALL PROPERTIES ARE IN UNITS OF INCHES
- hs DENOTES HAUNCH THICKNESS FOR SECTION PROPERTIES CALCULATION PURPOSE ONLY.
- As DENOTES THE AREA OF SLAB REINFORCEMENT PER EFFECTIVE SLAB WIDTH.
- Hst DENOTES THE DISTANCE FROM TOP OF EFFECTIVE SLAB TO C.G. OF SLAB REINFORCEMENT.
- C DENOTES THE DISTANCE FROM BOTTOM OF BEAM TO NEUTRAL AXIS.

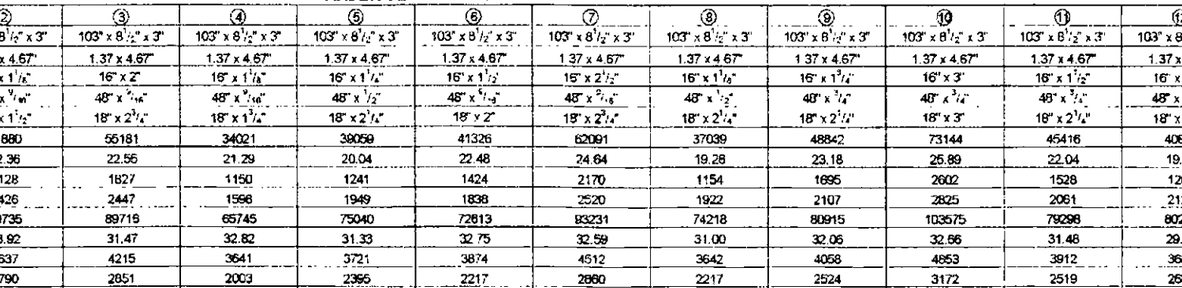

GIRDER G1

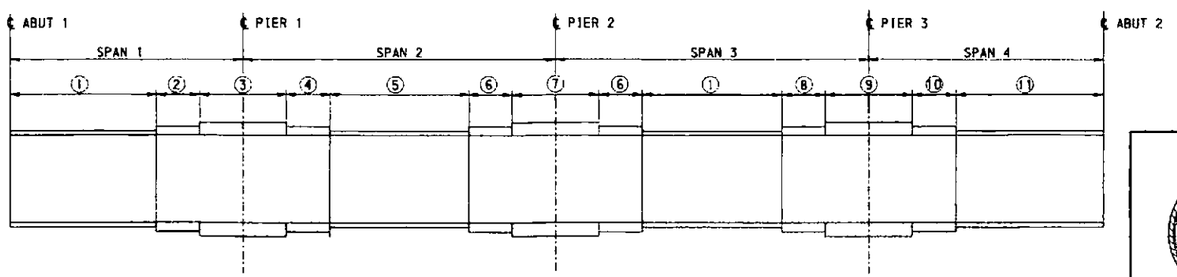

GIRDER G2

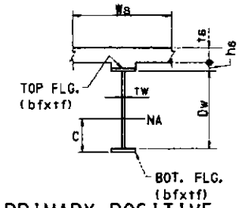

PRIMARY POSITIVE MOMENT REGION

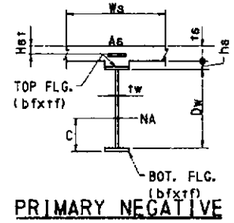

PRIMARY NEGATIVE MOMENT REGION

Mark	Description	By	Chk'd.	Recm'd.	Date
REVISIONS					

DESIGNED BY	RES
DRAWN BY	CB
CHECKED BY	MP

COMMONWEALTH OF PENNSYLVANIA
DEPARTMENT OF TRANSPORTATION

ARMSTRONG COUNTY
SR 1038 SECTION 150
SEG 0040 OFFSET 1110
SR 1038-150 STA 1956+35.83 AND SR 4025 OVER
BUFFALO AND PITTSBURGH RAILROAD
4 SPAN STEEL MULTI-GIRDER BRIDGE AND
SINGLE SPAN ROLLED BEAM T-SPAN
SECTION PROPERTIES 1

RECOMMENDED _____

SHEET 51 OF 97

S-27038

A-00122496

GIRDER SECTION PROPERTIES

	SECTION NUMBER		①	②	③	④	⑤	⑥	⑦	⑧	⑨
GIRDERS 3 & 4	SLAB	ws x ts x hs	110" x 8 1/2" x 2 1/2"	110" x 8 1/2" x 2 1/2"	110" x 8 1/2" x 2 1/2"	110" x 8 1/2" x 2 1/2"	110" x 8 1/2" x 2 1/2"	110" x 8 1/2" x 2 1/2"	110" x 8 1/2" x 2 1/2"	110" x 8 1/2" x 2 1/2"	110" x 8 1/2" x 2 1/2"
	REBAR	As (IN²) x Hst	1.37 x 4.67"	1.37 x 4.67"	1.37 x 4.67"	1.37 x 4.67"	1.37 x 4.67"	1.37 x 4.67"	1.37 x 4.67"	1.37 x 4.67"	1.37 x 4.67"
	TOP FLANGE	bf x tf	16" x 1 1/8"	16" x 1 1/8"	16" x 2"	16" x 1 1/8"	16" x 1 1/4"	16" x 1 1/2"	16" x 2 1/2"	16" x 1 1/8"	16" x 1 1/8"
	WEB	Dw x tw	48" x 9/16"	48" x 9/16"	48" x 5/16"	48" x 9/16"	48" x 1/2"	48" x 3/16"	48" x 7/16"	48" x 1/2"	48" x 5/16"
	BOTT. FLANGE	bf x tf	18" x 2 1/4"	18" x 1 1/2"	18" x 2 1/4"	18" x 1 3/4"	18" x 2 1/4"	18" x 2"	18" x 2 1/4"	18" x 2 1/4"	18" x 2"
	STEEL	I (IN⁴)	37756	31880	55181	34021	39059	41326	62091	37039	35969
	ONLY	C (IN)	19.52	22.36	22.55	21.29	20.04	22.48	24.64	19.28	20.35
		S-top (IN³)	1185	1128	1827	1150	1241	1424	2170	1154	1169
		S-bott (IN³)	1934	1426	2447	1598	1949	1838	2520	1922	1768
	COMPOSITE	I (IN⁴)	75587	61150	90438	66263	75726	73158	93854	74934	71064
	3n=24	C (IN)	31.25	34.26	31.78	33.17	31.70	33.08	32.87	31.38	32.17
		S-top (IN³)	3756	3736	4313	3742	3825	3972	4606	3747	3749
		S-bott (IN³)	2419	1785	2846	1898	2389	2211	2855	2388	2209
	COMPOSITE	I (IN⁴)	107824	83756	124627	92056	106771	100594	125801	106571	100072
	n=8	C (IN)	41.17	43.33	40.67	42.57	41.49	42.13	41.10	41.39	41.85
		S-top (IN³)	10561	11482	10319	11084	10668	10732	10350	10673	10788
		S-bott (IN³)	2619	1933	3064	2162	2573	2388	3061	2575	2391
	REBAR	I (IN⁴)	52795	43859	68804	47080	53680	53898	74023	52207	50047
	COMPOSITE	C (IN)	24.27	27.33	26.13	26.19	24.76	26.75	27.80	24.20	25.18
		S-top (IN³)	1948	1883	2577	1907	2007	2178	2908	1921	1929
		S-bott (IN³)	2176	1605	2626	1797	2167	2015	2863	2157	1988
	SECTION NUMBER		①	②	③	④	⑤	⑥	⑦	⑧	⑨
GIRDER 5	SLAB	ws x ts x hs	103" x 8 1/2" x 2 1/2"	103" x 8 1/2" x 2 1/2"	103" x 8 1/2" x 2 1/2"	103" x 8 1/2" x 2 1/2"	103" x 8 1/2" x 2 1/2"	103" x 8 1/2" x 2 1/2"	103" x 8 1/2" x 2 1/2"	103" x 8 1/2" x 2 1/2"	103" x 8 1/2" x 2 1/2"
	REBAR	As (IN²) x Hst	1.37 x 4.67"	1.37 x 4.67"	1.37 x 4.67"	1.37 x 4.67"	1.37 x 4.67"	1.37 x 4.67"	1.37 x 4.67"	1.37 x 4.67"	1.37 x 4.67"
	TOP FLANGE	bf x tf	16" x 1 1/8"	16" x 1 1/8"	16" x 2"	16" x 1 1/8"	16" x 1 1/4"	16" x 1 1/2"	16" x 2 1/2"	16" x 1 1/8"	16" x 1 1/8"
	WEB	Dw x tw	48" x 9/16"	48" x 9/16"	48" x 5/16"	48" x 9/16"	48" x 1/2"	48" x 7/16"	48" x 9/16"	48" x 1/2"	48" x 5/16"
	BOTT. FLANGE	bf x tf	18" x 2 1/4"	18" x 1 1/2"	18" x 2 1/4"	18" x 1 3/4"	18" x 2 1/4"	18" x 2"	18" x 2 1/4"	18" x 2 1/4"	18" x 2"
	STEEL	I (IN⁴)	37756	31880	55181	34021	39059	41326	62091	37039	35969
	ONLY	C (IN)	19.52	22.36	22.55	21.29	20.04	22.48	24.64	19.28	20.35
		S-top (IN³)	1185	1128	1827	1150	1241	1424	2170	1154	1169
		S-bott (IN³)	1934	1426	2447	1598	1949	1838	2520	1922	1768
	COMPOSITE	I (IN⁴)	73895	58909	88755	64869	74092	71726	92312	73258	69519
	3n=24	C (IN)	30.73	33.76	31.34	32.66	31.18	32.81	32.47	30.84	31.85
		S-top (IN³)	3579	3551	4146	3651	3647	3796	4443	3568	3570
		S-bott (IN³)	2405	1775	2832	1986	2376	2200	2843	2375	2196
	COMPOSITE	I (IN⁴)	105843	82418	122405	90510	104868	98899	123689	104643	98312
	n=8	C (IN)	40.56	42.80	40.10	42.01	40.90	41.57	40.56	40.78	41.27
		S-top (IN³)	9788	10534	9675	10212	9888	9963	9743	9881	9872
		S-bott (IN³)	2609	1926	3053	2154	2564	2379	3050	2586	2382
	REBAR	I (IN⁴)	51954	43204	67834	46359	52844	53193	73333	51362	49265
	COMPOSITE	C (IN)	24.00	27.05	25.92	25.92	24.50	26.51	27.61	23.93	24.91
		S-top (IN³)	1898	1833	2529	1858	1957	2129	2860	1871	1878
		S-bott (IN³)	2165	1597	2617	1788	2157	2008	2658	2148	1978

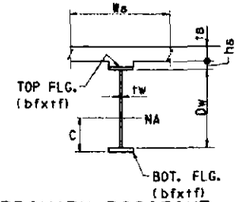

PRIMARY POSITIVE MOMENT REGION

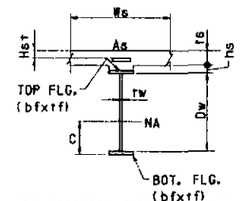

PRIMARY NEGATIVE MOMENT REGION

NOTES FOR GIRDER SECTION PROPERTIES

- ALL PROPERTIES ARE IN UNITS OF INCHES
- hs DENOTES HAUNCH THICKNESS FOR SECTION PROPERTIES CALCULATION PURPOSE ONLY.
- As DENOTES THE AREA OF SLAB REINFORCEMENT PER EFFECTIVE SLAB WIDTH.
- Hst DENOTES THE DISTANCE FROM TOP OF EFFECTIVE SLAB TO C.G. OF SLAB REINFORCEMENT.
- C DENOTES THE DISTANCE FROM BOTTOM OF BEAM TO NEUTRAL AXIS.

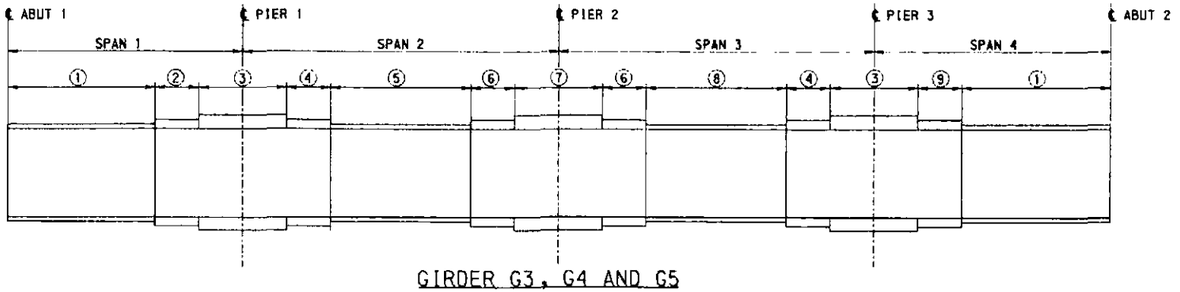

GIRDER G3, G4 AND G5

Mark	Description	By	Chk'd.	Recm'd.	Date
	REVISIONS				

COMMONWEALTH OF PENNSYLVANIA
DEPARTMENT OF TRANSPORTATION

ARMSTRONG COUNTY
SR 1038 SECTION 150
SEG 0040 OFFSET 1110
SR 1038-150 STA 1956+35.83 AND SR 4025 OVER
BUFFALO AND PITTSBURGH RAILROAD
4 SPAN STEEL MULTI-GIRDER BRIDGE AND
SINGLE SPAN ROLLED BEAM T-SPAN
SECTION PROPERTIES 2

RECOMMENDED _____ 6 2007

SHEET 52 OF 97

S-27038

DESIGNED BY	RES
DRAWN BY	CB
CHECKED BY	MP

A-00122496

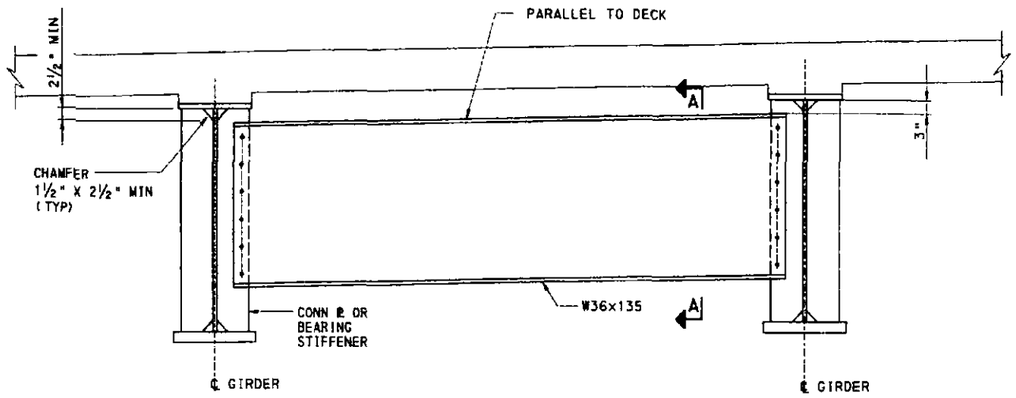

END DIAPHRAGM D1

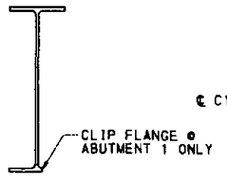

SECTION A-A

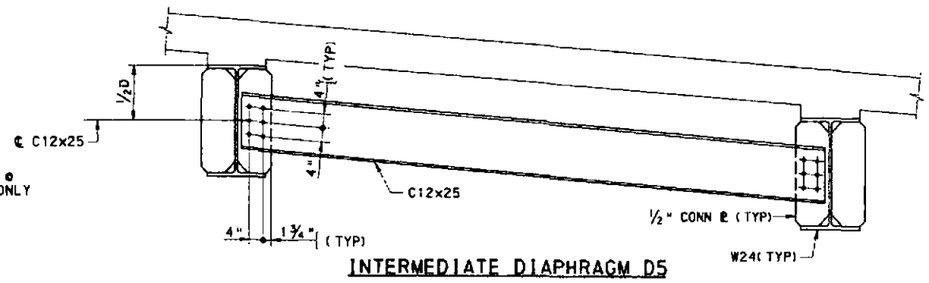

INTERMEDIATE DIAPHRAGM D5

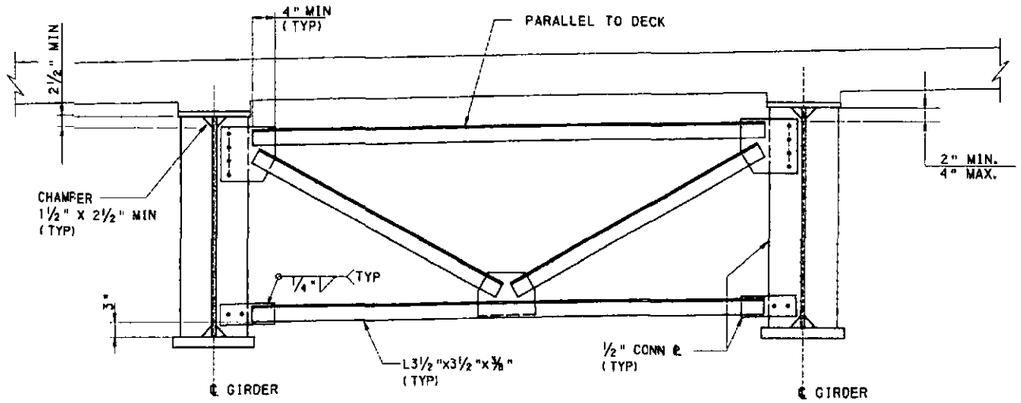

INTERMEDIATE DIAPHRAGM D2

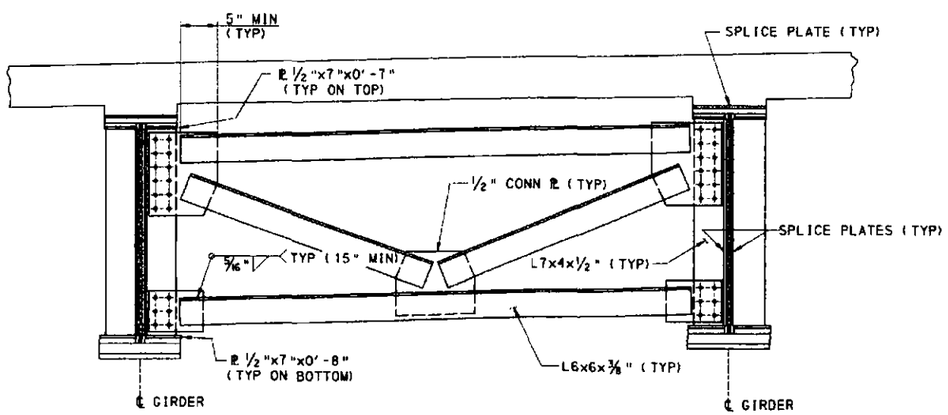

INTERMEDIATE DIAPHRAGM D3
(TYP AT GIRDER KINKS)

NOTES:

- FOR GENERAL NOTES SEE SHEETS 5 AND 6
- FOR LOCATION OF DIAPHRAGMS SEE FRAMING PLANS SHEETS 39 AND 40.
- FOR GIRDER ELEVATIONS SEE SHEETS 41 AND 42.
- FOR FIELD SPLICE DETAILS SEE SHEETS 43 AND 44.
- FOR ADDITIONAL DIAPHRAGM DETAILS NOT SHOWN SEE STANDARD DRAWING BC-754M.

Mark	Description	By	Chk'd.	Recm'd.	Date
REVISIONS					

2' 1' 0' 2'

DESIGNED BY	BGC
DRAWN BY	EK
CHECKED BY	MP

COMMONWEALTH OF PENNSYLVANIA
DEPARTMENT OF TRANSPORTATION

ARMSTRONG COUNTY
SR 1038 SECTION 150
SEG 0040 OFFSET 1110
SR 1038-150 STA 1956+35.83 AND SR 4025 OVER
BUFFALO AND PITTSBURGH RAILROAD
4 SPAN STEEL MULTI-GIRDER BRIDGE AND
SINGLE SPAN ROLLED BEAM T-SPAN
STEEL DIAPHRAGM DETAILS 1

RECOMMENDED _____

SHEET 53 OF 97

S-27038

A-00122496

N:\projects\04432\structures\...\1\37\2007

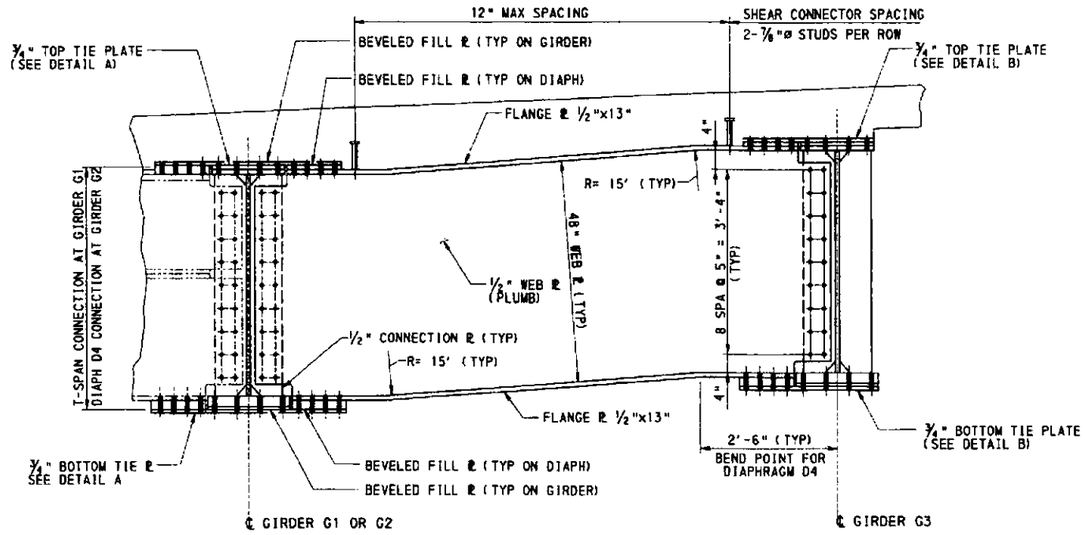

DIAPHRAGM D4

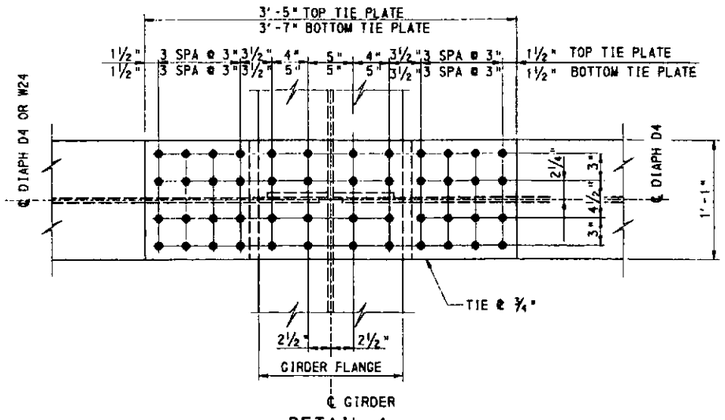

DETAIL A

TOP & BOTTOM TIE PLATE
TIE PLATE IS TYPICAL FOR DIAPHRAGM D4 TO D4 CONNECTION AT GIRDER G2 AND DIAPHRAGM D4 CONNECTION TO W24 (B2 THRU B8) AT GIRDER G1

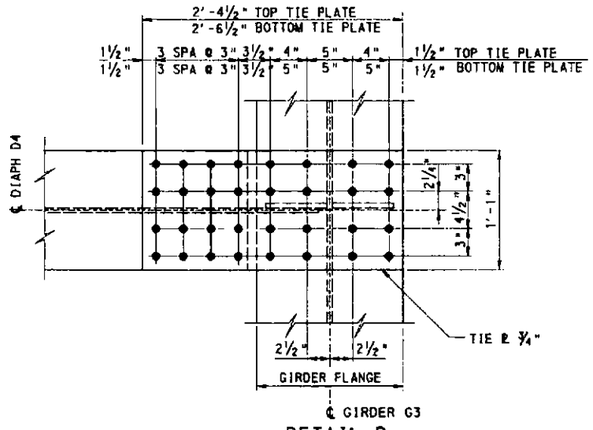

DETAIL B

TOP & BOTTOM TIE PLATE
TIE PLATE TYPICAL FOR DIAPHRAGM D4 TO GIRDER G3 CONNECTION

NOTES:

- FOR GENERAL NOTES SEE SHEETS 5 AND 6.
- FOR LOCATION OF DIAPHRAGMS SEE FRAMING PLANS SHEETS 39 AND 40.
- FOR GIRDER DETAILS SEE SHEETS 41, 42, 45, 46, AND 47.
- FOR ADDITIONAL DIAPHRAGM DETAILS NOT SHOWN SEE STANDARD DRAWING BC-754M.
- ALL TIE PLATES TO CONFORM TO THE CHARPY V-NOTCH REQUIREMENTS.

2' 1' 0' 2'

Mark	Description	By	Chk'd.	Recm'd.	Date
REVISIONS					

COMMONWEALTH OF PENNSYLVANIA
DEPARTMENT OF TRANSPORTATION

ARMSTRONG COUNTY
SR 1038 SECTION 150
SEG 0040 OFFSET 1110
SR 1038-150 STA 1956+35.83 AND SR 4025 OVER BUFFALO AND PITTSBURGH RAILROAD
4 SPAN STEEL MULTI-GIRDER BRIDGE AND SINGLE SPAN ROLLED BEAM T-SPAN
STEEL DIAPHRAGM DETAILS 2

COMMONWEALTH OF PENNSYLVANIA REGISTERED PROFESSIONAL KEITH A. MICHAEL ENGINEER

RECOMMENDED _____ 5/2007

SHEET 54 OF 97

S-27038

A-00122496

DESIGNED BY	BGC
DRAWN BY	EK
CHECKED BY	MP

H:\projects\s40412\structure_kittaining\final\401APRC.dgn 7/31/2007

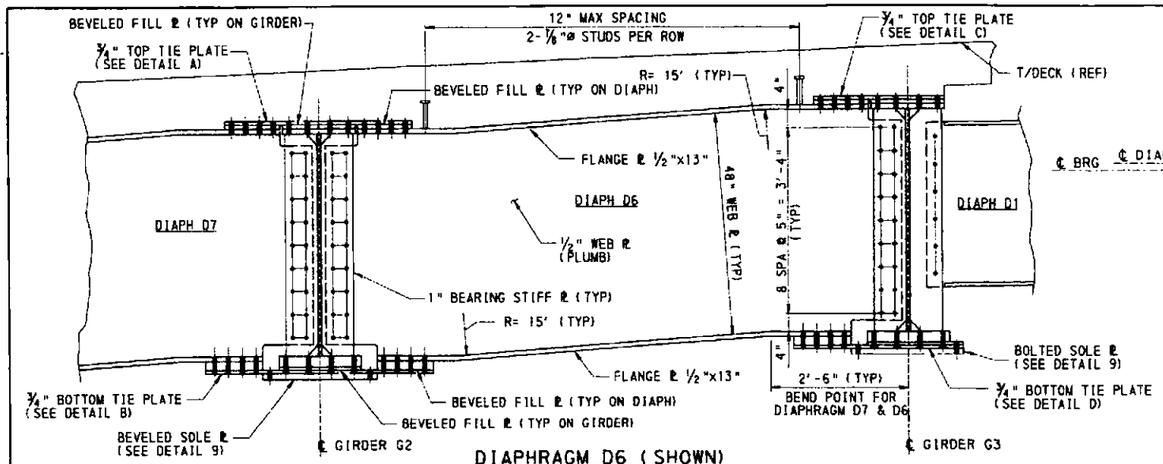

DIAPHRAGM D6 (SHOWN)
DIAPHRAGM D7 (SIMILAR)

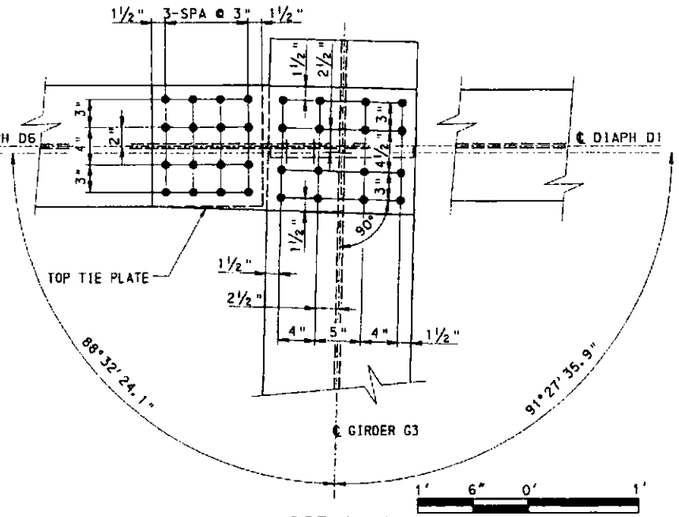

DETAIL C

1' 6" 0' 1'

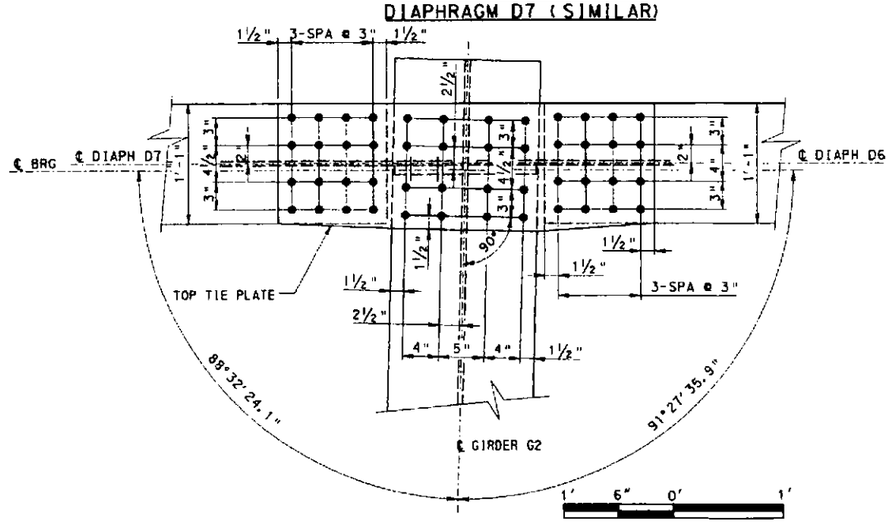

DETAIL A

1' 6" 0' 1'

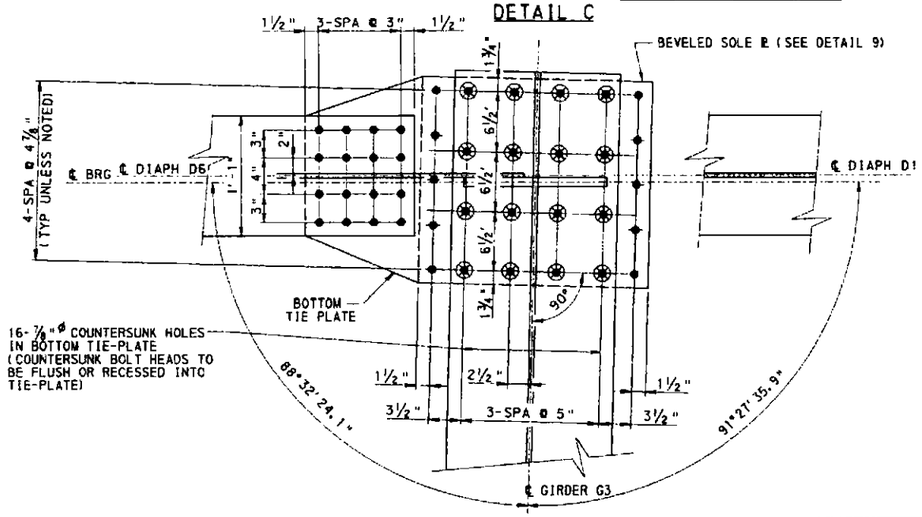

DETAIL D

1' 6" 0' 1'

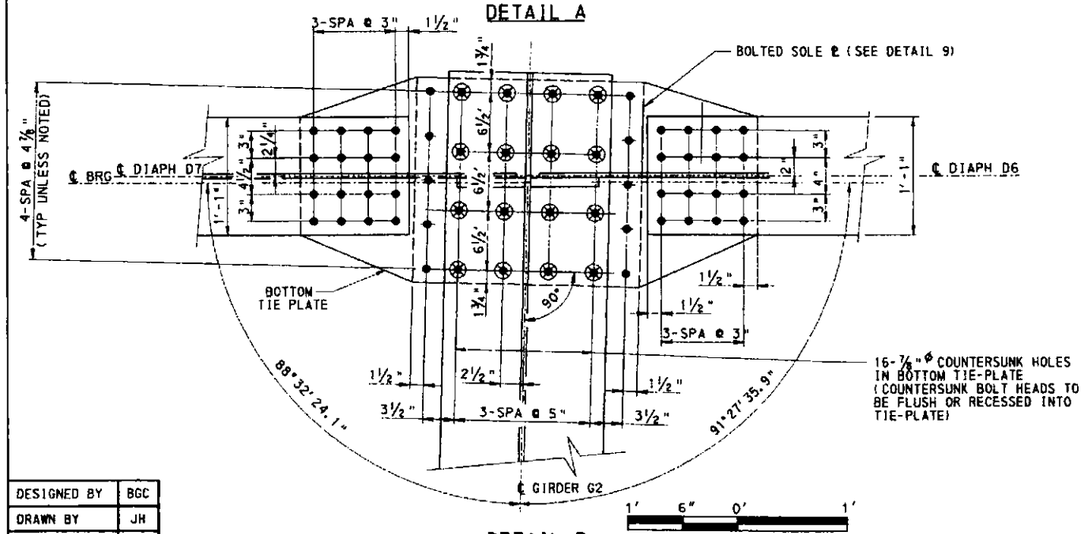

DETAIL B

1' 6" 0' 1'

2' 1' 0' 2'

(TYPICAL UNLESS NOTED)

NOTES:

- FOR GENERAL NOTES SEE SHEETS 5 & 6
- FOR LOCATION OF DIAPHRAGMS SEE FRAMING PLAN SHEET 40
- FOR GIRDER ELEVATIONS SEE SHEETS 41 & 42
- FOR BEARING DETAILS SEE SHEETS 57 THRU 62
- FOR BOLTED SOLE PLATE DETAIL 9 SEE SHEET 56
- FOR ADDITIONAL DIAPHRAGM DETAILS NOT SHOWN SEE STANDARD DRAWING BC-754M
- ALL TIE PLATES TO CONFORM TO THE CHARPY V-NOTCH REQUIREMENTS.
- ALL BOLT HOLES 15/16"ø FOR ⅞"ø A325 HS BOLTS
- COUNTERSUNK BOLTS TO BE ⅞"ø, ASTM A449

Mark	Description	By	Chk'd.	Recm'd.	Date
REVISIONS					

DESIGNED BY	BGC
DRAWN BY	JH
CHECKED BY	PAM

COMMONWEALTH OF PENNSYLVANIA
DEPARTMENT OF TRANSPORTATION

ARMSTRONG COUNTY
SR 1038 SECTION 150
SEG 0040 OFFSET 1110
SR 1038-150 STA 1956+35.83 AND SR 4025 OVER BUFFALO AND PITTSBURGH RAILROAD
4 SPAN STEEL MULTI-GIRDER BRIDGE AND SINGLE SPAN ROLLED BEAM T-SPAN
STEEL DIAPHRAGMS 3

COMMONWEALTH OF PENNSYLVANIA REGISTERED PROFESSIONAL KEITH A. MICHAEL ENGINEER

RECOMMENDED JUL 6 2017

SHEET 55 OF 97

S-27038

A-00122496

h:\projects\80432\structure\dwg_files\drawing\final\diaphs01.dgn 7/6/2017

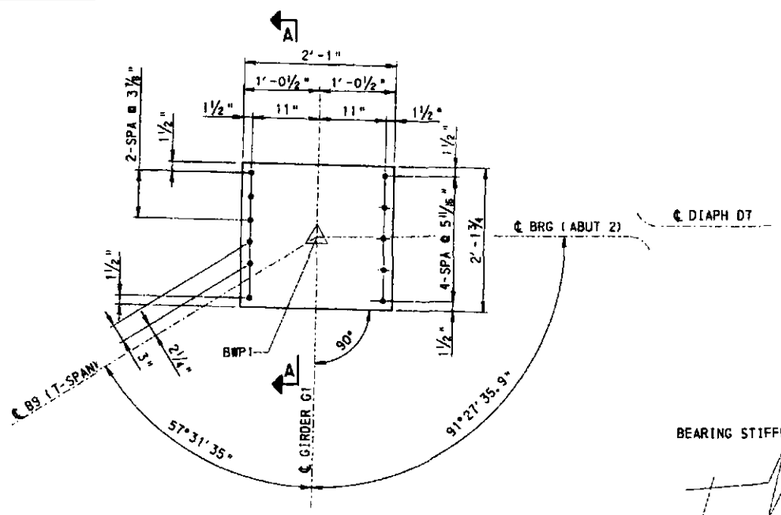

DETAIL 10
BOLTED SOLE PLATE FOR BEARING ED83
(GIRDER G1 @ ABUTMENT 2)

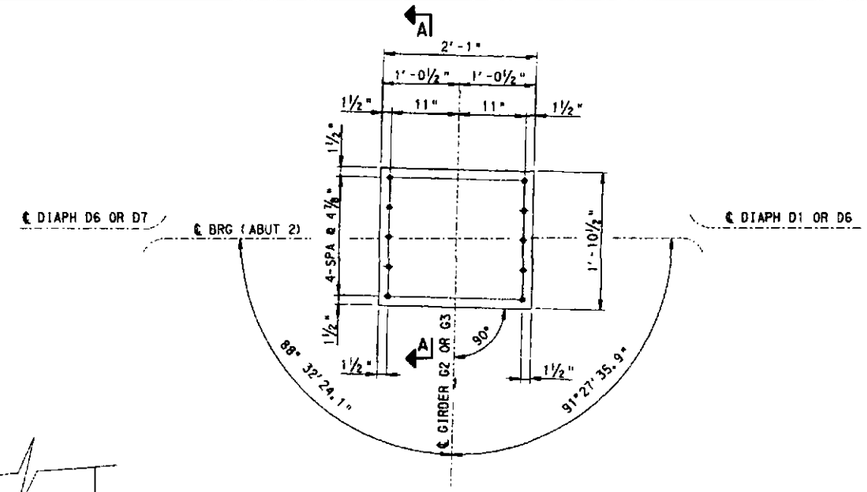

DETAIL 9
BEVELED SOLE PLATE FOR BEARINGS GDB3 & ED84
(GIRDERS G2 OR G3 @ ABUTMENT 2)

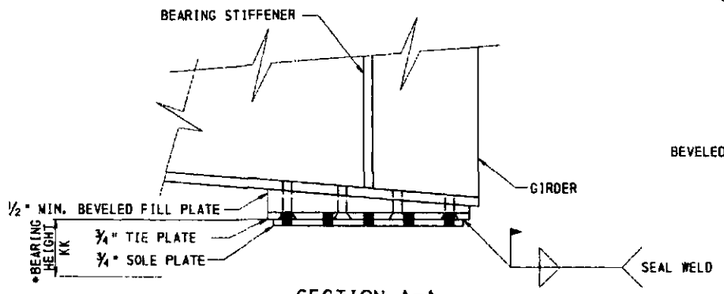

SECTION A-A
GIRDERS G2 & G3 SHOWN
GIRDER G1 SIMILAR
NTS

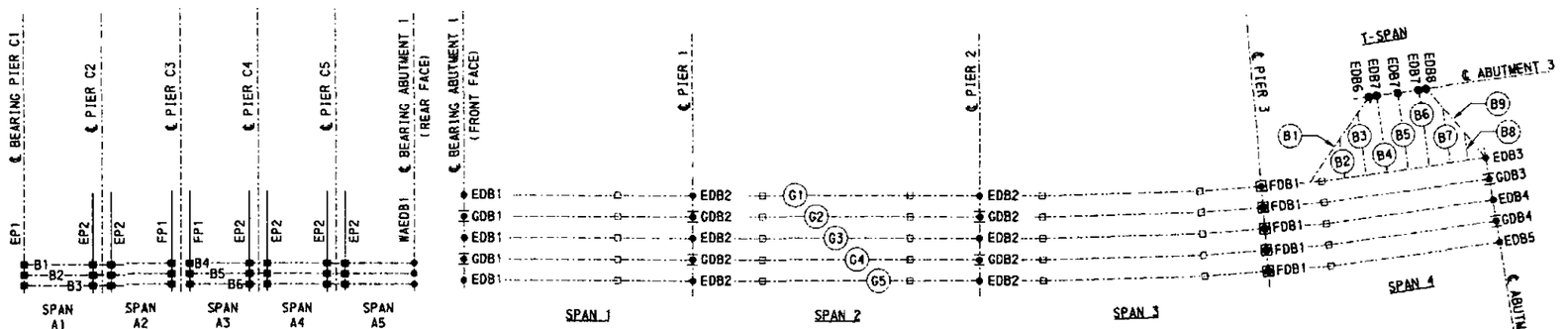

BEARING KEY PLAN
(NTS)

BEARING LEGEND

- NON-GUIDED (FREE TO MOVE) BEARING
- GUIDED BEARING
- FIXED BEARING
- ELASTOMERIC BEARING PAD (2 PADS PER BEAM END)

NOTES:

- FOR GENERAL NOTES SEE SHEETS 5 & 6
- FOR LOCATION OF DETAIL 10 SEE SHEET 45
- FOR DETAILS OF DIAPHRAGM D6 & D7 ALONG ABUTMENT 2 AND LOCATION OF DETAIL 9 SEE SHEET 55
- ALL BOLT HOLES 13/16"ø FOR ⅞"ø A325 HS BOLTS UNLESS NOTED.
- FOR DISC BEARING DIMENSION TABLES SEE SHEETS 57 & 58.

LEGEND

BWP BEAM WORK POINT

NTS NOT TO SCALE

• SEE DISC BEARING DIMENSION TABLES

Mark	Description	By	Chk'd.	Recm'd.	Date
REVISIONS					

1' 0' 1'
UNLESS NOTED

DESIGNED BY	RES
DRAWN BY	JH
CHECKED BY	PAM

COMMONWEALTH OF PENNSYLVANIA
DEPARTMENT OF TRANSPORTATION

ARMSTRONG COUNTY
SR 1038 SECTION 150
SEG 0040 OFFSET 1110
SR 1038-150 STA 1956+35.83 AND SR 4025 OVER
BUFFALO AND PITTSBURGH RAILROAD
4 SPAN STEEL MULTI-GIRDER BRIDGE AND
SINGLE SPAN ROLLED BEAM T-SPAN
BOLTED SOLE PLATE DETAILS & BEARING KEY PLAN

RECOMMENDED _____ $ 2007

SHEET 56 OF 97

S-27038

A-00122496

T:\projects\0437\ast\Ge\Pw\KT\fontng\BRTINST\Revised\plt\dgn\...
1/31/2007

BEARING LOCATION	BEARING MARK	MASONRY PLATE							ANCHOR BOLTS		DISC			SRM		BEARING BLOCK			TOP PTFE		SIDE PTFE			TOP STAINLESS STEEL			SIDE STAINLESS STEEL			GUIDE BARS			** SOLE PLATE					BEARING HEIGHT*	NO. REQ'D
		A	B	C	D	E	F	LL	G	QTY.	H	J	K	L	M	N	P	Q	R	S	T	U	V	W	X	Y	Z	AA	BB	CC	DD	EE	FF	GG	HH	JJ	KK	
ABUT 1	GDB1	32.000	16.000	2.250	13.000	–	–	2.625	1.750	2	12.000	2.625	1.750	4.190	2.500	16.500	16.500	1.375	15.500	0.188	15.500	1.125	0.188	15.750	23.500	0.090	23.500	1.375	0.090	24.500	1.750	0.875	20.000	25.000	0.750	0.950	7.380	2
PIERS 1 & 2	GDB2	39.750	21.000	2.875	16.875	7.500	–	3.875	1.750	4	16.500	3.875	2.250	5.310	3.750	22.500	22.500	1.625	21.500	0.188	21.500	1.375	0.188	21.750	28.125	0.090	28.125	1.625	0.090	29.125	2.000	1.250	27.750	30.625	1.250	1.164	9.470	4
ABUT 2	GDB3	37.000	16.000	2.750	15.500	–	–	2.625	1.750	2	12.000	2.625	1.750	4.190	2.500	16.500	16.500	1.375	15.500	0.188	15.500	1.125	0.188	15.750	20.000	0.090	20.000	1.375	0.090	21.000	1.750	1.000	25.000	22.500	0.750	0.000	6.934	1
ABUT 2	GDB4	33.000	16.000	2.375	13.500	–	–	2.625	1.750	2	12.000	2.625	1.750	4.190	2.500	16.500	16.500	1.375	15.500	0.188	15.500	1.125	0.188	15.750	20.000	0.090	20.000	1.375	0.090	21.000	1.750	1.000	21.000	22.500	0.750	0.855	7.414	1

* BEARING HEIGHT TAKEN AT ℄ OF BEARING. BEARING HEIGHT INCLUDES ⅛" BEDDING MATERIAL (FABRIC PAD). EFFECTS OF BEVELED SOLE PLATE ARE INCLUDED. (WHERE APPLICABLE)

** BEARING GDB3 SEE BOLTED SOLE PLATE DETAIL 9

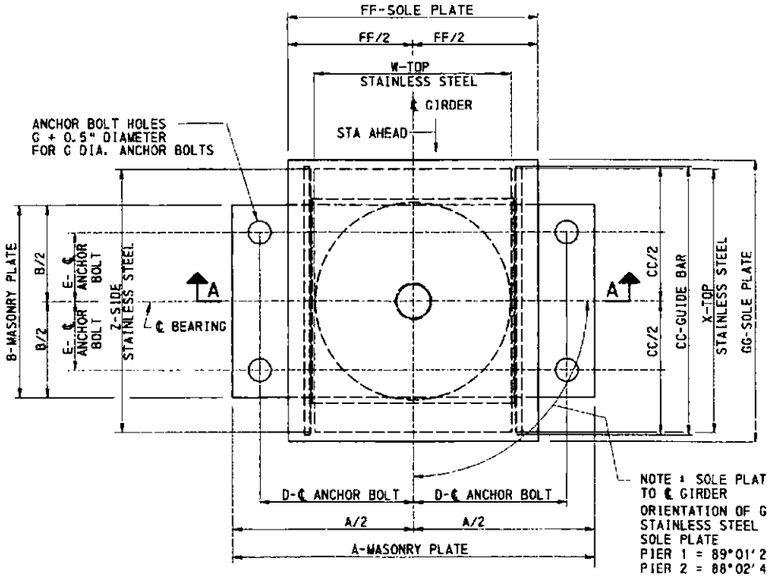

PLAN GUIDED DISC BEARING MK GDB2
NTS

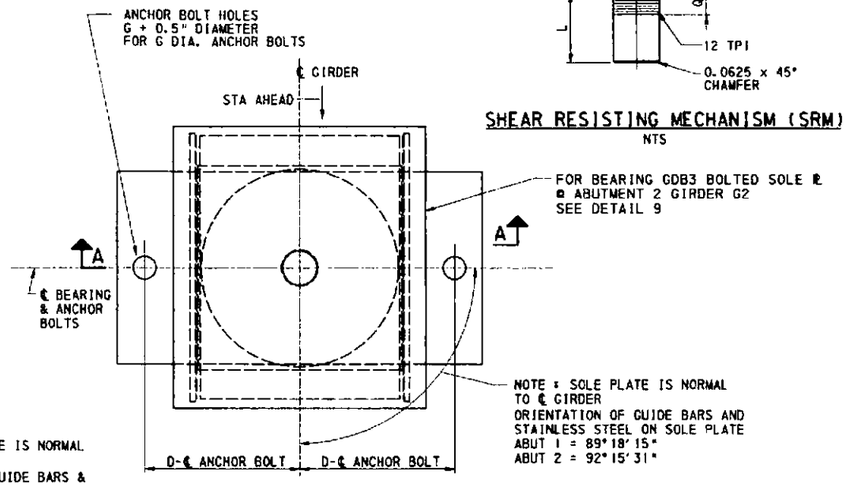

PLAN GUIDED DISC BEARING MK GDB1, GDB3 & GDB4
FOR INFORMATION NOT SHOWN SEE BEARING MK GBD2
NTS

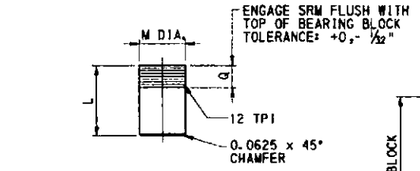

SHEAR RESISTING MECHANISM (SRM)
NTS

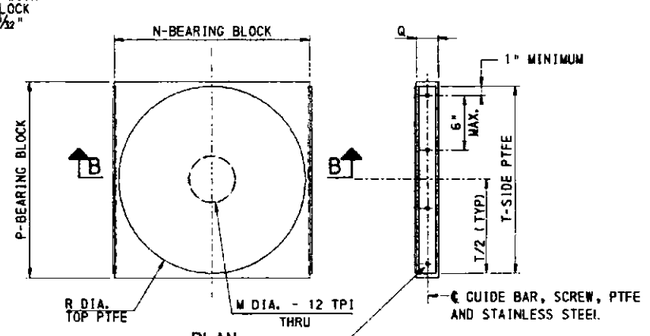

PLAN

SECTION B-B

BEARING BLOCK DETAILS
NTS

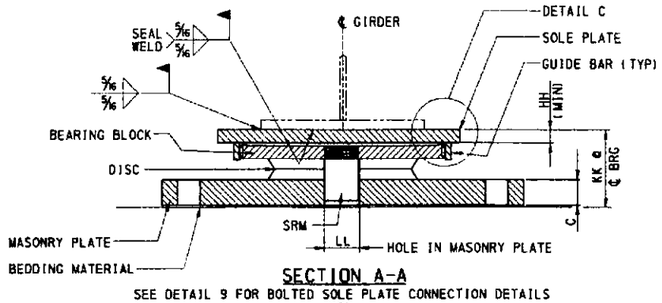

SECTION A-A
SEE DETAIL 9 FOR BOLTED SOLE PLATE CONNECTION DETAILS
NTS

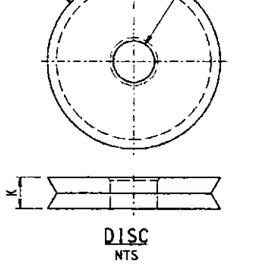

DISC
NTS

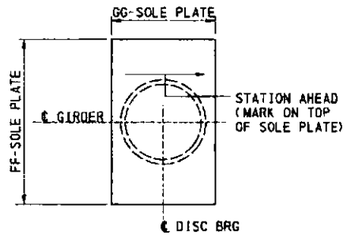

PLAN

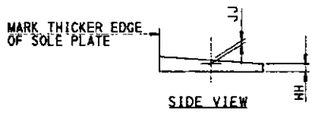

SIDE VIEW

BEVELED SOLE PLATE DETAIL
NTS

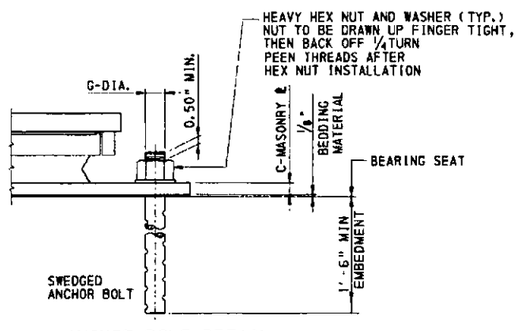

ANCHOR BOLT DETAIL
NTS

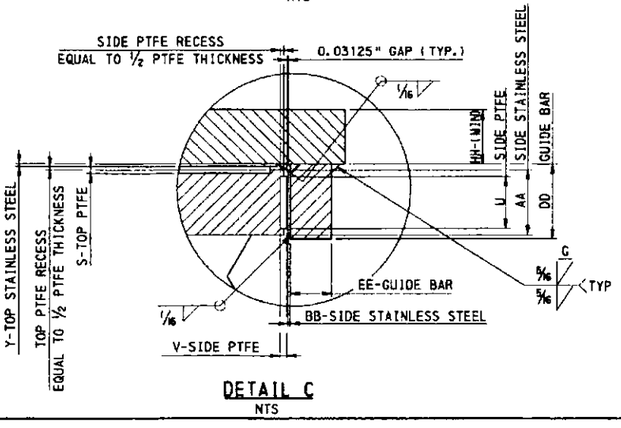

DETAIL C
NTS

NOTES:

- FOR GENERAL NOTES SEE SHEETS 5 & 6
- FOR FRAMING PLAN SEE SHEETS 39 & 40
- FOR DISC BEARING NOTES AND MATERIALS SEE SHEETS 60, 61 & 62
- FOR BOLTED SOLE PLATE DETAIL 9 AND BEARING KEY PLAN SEE SHEET 56

Mark	Description	By	Chk'd.	Recm'd.	Date
REVISIONS					

DESIGNED BY	RES
DRAWN BY	RLG
CHECKED BY	PAM

COMMONWEALTH OF PENNSYLVANIA
DEPARTMENT OF TRANSPORTATION

ARMSTRONG COUNTY
SR 1038 SECTION 150

SEG 0040 OFFSET 1110
SR 1038-150 STA 1956+35.83 AND SR 4025 OVER BUFFALO AND PITTSBURGH RAILROAD
4 SPAN STEEL MULTI-GIRDER BRIDGE AND SINGLE SPAN ROLLED BEAM T-SPAN
DISC BEARINGS - EXPANSION GUIDED

COMMONWEALTH OF PENNSYLVANIA REGISTERED PROFESSIONAL KEITH A. MICHAEL ENGINEER

RECOMMENDED _____

SHEET 57 OF 97

S-27038

A-00122496

BEARING LOCATION	BEARING MARK	MASONRY PLATE						ANCHOR BOLTS		DISC			SRM		UPPER BEARING PLATE		TOP PTFE		TOP STAINLESS STEEL			** SOLE PLATE				BEARING HEIGHT*	NO. REQUIRED
		A	B	C	D	E	F	LL	G	QTY.	H	J	K	L	M	N	Q	R	S	W	X	Y	FF	GG	HH	JJ	KK	
ABUT 1	EDB1	32.000	16.000	2.250	13.000	—	—	2.625	1.750	2	12.000	2.625	1.750	4.190	2.500	16.500	1.375	15.500	0.188	18.500	23.500	0.090	20.000	25.000	0.750	0.950	7.380	3
PIERS 1 & 2	EDB2	38.500	21.000	2.750	16.250	—	—	3.875	1.750	2	16.500	3.875	2.250	5.310	3.750	22.500	1.625	21.500	0.188	24.500	28.125	0.090	26.500	30.625	1.250	1.164	9.348	6
ABUT 2	EDB3	37.000	16.000	2.750	15.500	—	—	2.625	1.750	2	12.000	2.625	1.750	4.190	2.500	16.500	1.375	15.500	0.188	18.500	20.000	0.090	25.000	25.750	0.750	0.000	6.934	1
ABUT 2	EDB4	37.000	16.000	2.750	15.500	—	—	2.625	1.750	2	12.000	2.625	1.750	4.190	2.500	16.500	1.375	15.500	0.188	18.500	20.000	0.090	25.000	22.500	0.750	0.000	6.934	1
ABUT 2	EDB5	33.000	16.000	2.375	13.500	—	—	2.625	1.750	2	12.000	2.625	1.750	4.190	2.500	16.500	1.375	15.500	0.188	18.500	20.000	0.090	21.000	22.500	0.750	0.855	7.414	1
ABUT 3	EDB6	28.500	15.000	2.000	12.250	—	—	1.875	1.000	2	10.500	1.875	1.500	3.440	1.750	14.500	1.000	13.500	0.188	18.000	17.125	0.090	19.000	18.625	1.375	0.500	6.684	1
ABUT 3	EDB7	28.500	15.000	2.000	12.250	—	—	1.875	1.000	2	10.500	1.875	1.500	3.440	1.750	14.500	1.000	13.500	0.188	18.000	17.125	0.090	19.000	18.625	1.375	0.000	6.184	3
ABUT 3	EDB8	28.500	15.000	2.000	12.250	—	—	1.875	1.000	2	10.500	1.875	1.500	3.440	1.750	14.500	1.000	13.500	0.188	18.000	17.125	0.090	19.000	18.625	1.375	0.260	6.444	1

* BEARING HEIGHT TAKEN AT ℄ OF BEARING. BEARING HEIGHT INCLUDES 1/8" BEDDING MATERIAL (FABRIC PAD). EFFECTS OF BEVELED SOLE PLATE ARE INCLUDED. (WHERE APPLICABLE)

** BEARING EDB3 SEE BOLTED SOLE PLATE DETAIL 10
BEARING EDB4 SEE BOLTED SOLE PLATE DETAIL 9

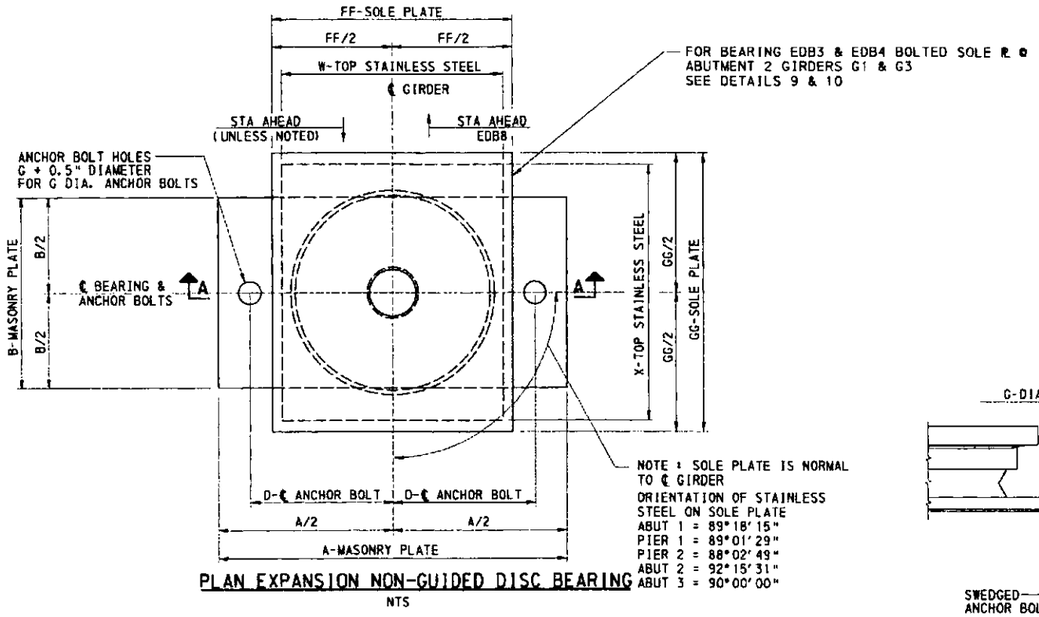

PLAN EXPANSION NON-GUIDED DISC BEARING
NTS

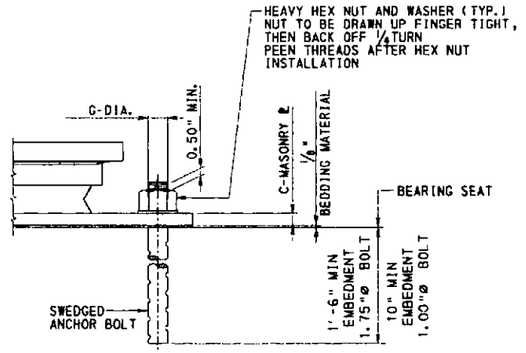

ANCHOR BOLT DETAIL
NTS

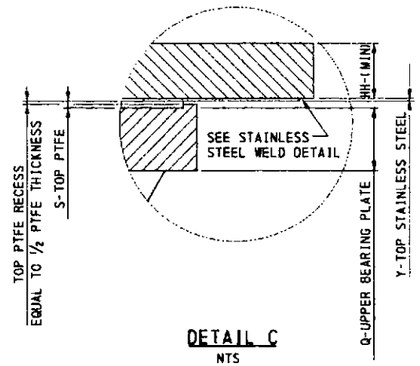

DETAIL C
NTS

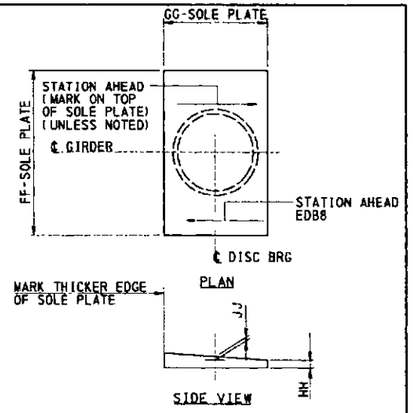

BEVELED SOLE PLATE DETAIL
NTS

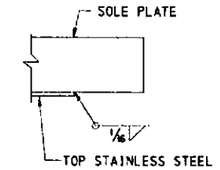

STAINLESS STEEL WELD DETAIL
NTS

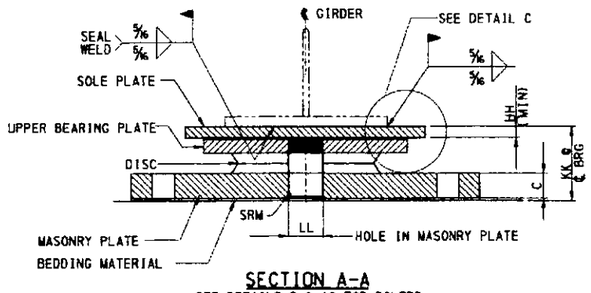

SECTION A-A
SEE DETAILS 9 & 10 FOR BOLTED SOLE PLATE CONNECTION DETAILS
NTS

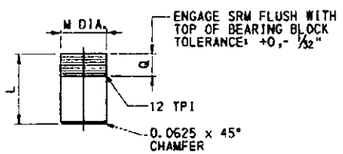

SHEAR RESISTING MECHANISM (SRM)
NTS

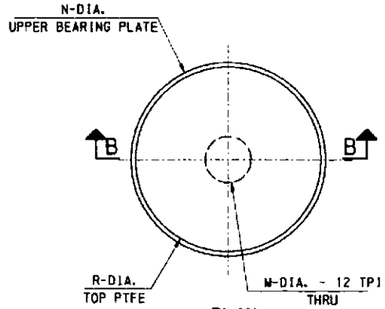

PLAN

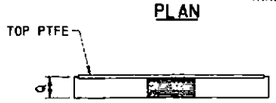

SECTION B-B
UPPER BEARING PLATE
NTS

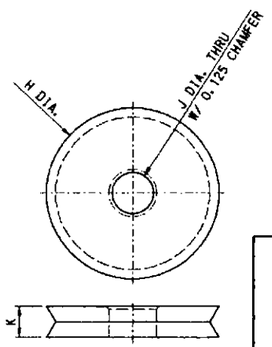

DISC
NTS

NOTES:

- FOR GENERAL NOTES SEE SHEETS 5 & 6
- FOR FRAMING PLAN SEE SHEETS 39 & 40
- FOR DISC BEARING NOTES AND MATERIALS SEE SHEETS 60, 61 & 62
- FOR BOLTED SOLE PLATE DETAILS 9 & 10 AND BEARING KEY PLAN SEE SHEET 56

Mark	Description	By	Chk'd.	Recm'd.	Date
REVISIONS					

DESIGNED BY	RES
DRAWN BY	RLG
CHECKED BY	PAM

COMMONWEALTH OF PENNSYLVANIA
DEPARTMENT OF TRANSPORTATION

ARMSTRONG COUNTY
SR 1038 SECTION 150
SEG 0040 OFFSET 1110
SR 1038-150 STA 1956+35.83 AND SR 4025 OVER BUFFALO AND PITTSBURGH RAILROAD
4 SPAN STEEL MULTI-GIRDER BRIDGE AND SINGLE SPAN ROLLED BEAM T-SPAN
DISC BEARINGS-EXPANSION NON-GUIDED

RECOMMENDED _____

SHEET 58 OF 97

S-27038

A-00122496

BEARING LOCATION	BEARING MARK	MASONRY PLATE							ANCHOR BOLTS		DISC			SRM		UPPER BEARING PLATE		SOLE PLATE				BEARING HEIGHT*	NO. REQUIRED
		A	B	C	D	E	F	LL	G	QTY.	H	J	K	L	M	N	Q	FF	GG	HH	JJ	KK	
PIER 3	FDB1	38.250	24.000	2.375	15.625	8.500	-	5.625	2.000	6	19.500	5.625	2.500	6.188	5.500	22.250	2.250	24.250	24.250	1.875	0.922	10.047	5

* BEARING HEIGHT TAKEN AT ℄ OF BEARING. BEARING HEIGHT INCLUDES ⅛" BEDDING MATERIAL (FABRIC PAD). EFFECTS OF BEVELED SOLE PLATE ARE INCLUDED.

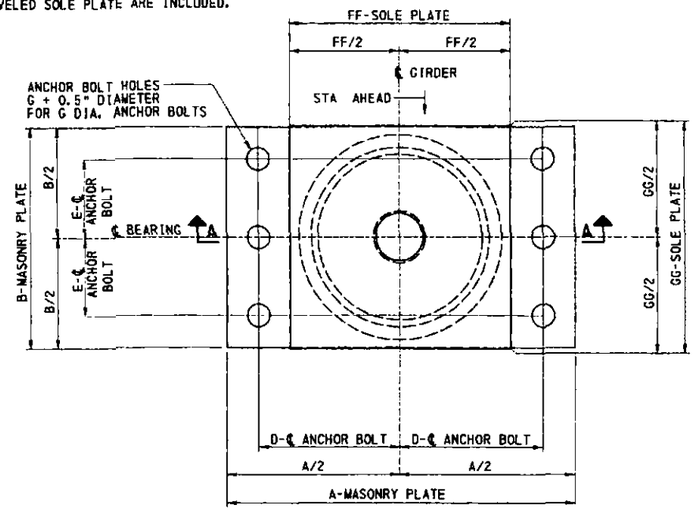

PLAN FIXED DISC BEARING
NTS

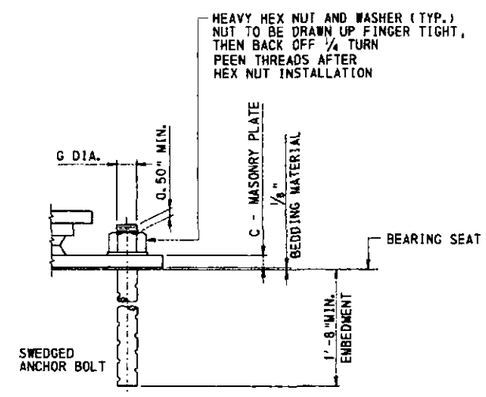

ANCHOR BOLT DETAIL
NTS

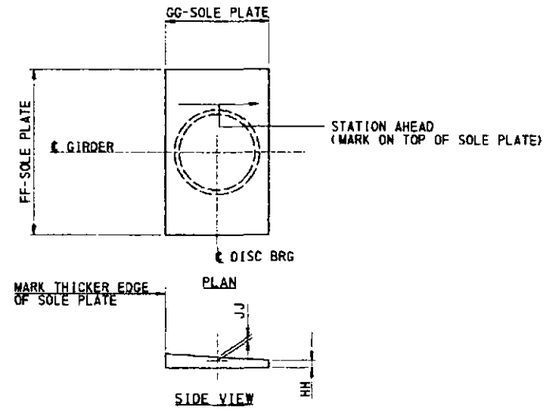

BEVELED SOLE PLATE DETAIL
NTS

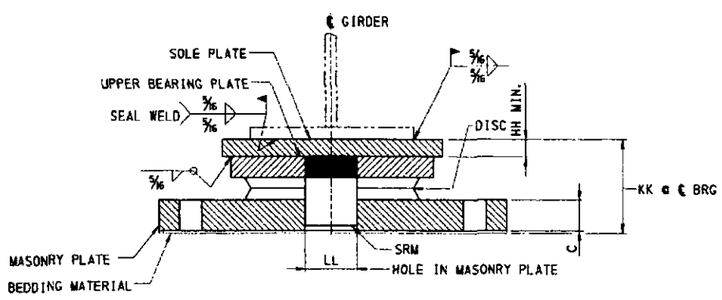

SECTION A-A
NTS

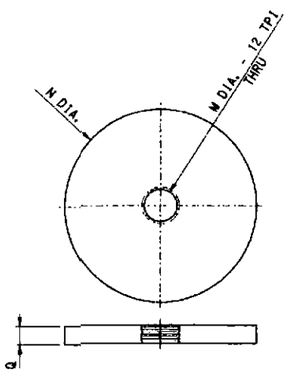

UPPER BEARING PLATE
NTS

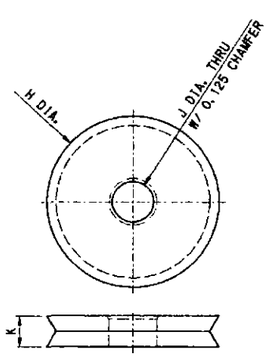

DISC
NTS

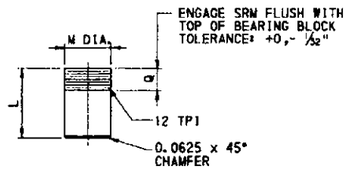

SHEAR RESISTING MECHANISM (SRM)
NTS

NOTES:

- FOR GENERAL NOTES SEE SHEETS 5 & 6
- FOR FRAMING PLAN SEE SHEETS 39 & 40
- FOR BEARING KEY PLAN SEE SHEET 56
- FOR DISC BEARING NOTES AND MATERIALS SEE SHEETS 60, 61 & 62

Mark	Description	By	Chk'd.	Recm'd.	Date
REVISIONS					

DESIGNED BY	RES
DRAWN BY	RLG
CHECKED BY	PAM

COMMONWEALTH OF PENNSYLVANIA
DEPARTMENT OF TRANSPORTATION

ARMSTRONG COUNTY
SR 1038 SECTION 150
SEG 0040 OFFSET 1110
SR 1038-150 STA 1956+35.83 AND SR 4025 OVER
BUFFALO AND PITTSBURGH RAILROAD
4 SPAN STEEL MULTI-GIRDER BRIDGE AND
SINGLE SPAN ROLLED BEAM T-SPAN
DISC BEARINGS - FIXED

RECOMMENDED _____

SHEET 59 OF 97

S-27038

A-00122496

DISC BEARING NOTES:

- ALL DIMENSIONS ARE IN INCHES UNLESS OTHERWISE NOTED.
- THESE DISC BEARINGS ARE DESIGNED IN ACCORDANCE WITH THE PENNSYLVANIA DEPARTMENT OF TRANSPORTATIONS DESIGN MANUAL PART 4, APRIL 2000 EDITION, INCLUDING THE LATEST REVISIONS OF AUGUST 2005 AND AASHTO LRFD BRIDGE DESIGN SPECIFICATIONS, SECOND EDITION, 1998.
- PROVIDE MATERIALS AND WORKMANSHIP IN ACCORDANCE WITH SPECIFICATIONS, PUBLICATION 408, ANSI/AASHTO/AWS/D1.5 BRIDGE WELDING CODE AND CONTRACT SPECIAL PROVISIONS.
- SANDBLAST IN ACCORDANCE WITH SSPC-SP10 TO REMOVE MILL SCALE FROM BEARINGS. THE PLATE SURFACES ABOVE AND BELOW THE DISC SHALL BE ABRASIVE BLASTED TO A NEAR WHITE CONDITION AS DEFINED IN SSPC-10 AND PROVIDE A BLAST PROFILE THAT IS JAGGED RATHER THAN "PEENED".
- GRIND SMOOTH ALL STEEL SURFACES AND EDGES AND REMOVE ANY SHARP PROTRUSIONS. FABRICATION TOLERANCES AND THE LIMITATIONS ON SURFACE FINISH WILL BE IN ACCORDANCE WITH PUBLICATION 408, SECTION 1111.
- PAINT ALL STEEL SURFACES IN ACCORDANCE WITH PUBLICATION 408, SECTION 1060. APPLY ALL COATS IN THE FABRICATION SHOP ONLY. DO NOT PAINT PTFE, STAINLESS STEEL, AREAS DIRECTLY ABOVE AND BELOW THE DISK, SHEAR PIN OR THE SHEAR PIN HOLE. APPLY ONLY PRIME COAT TO THE CONTACT AREA BETWEEN GIRDER BOTTOM FLANGE AND SOLE PLATE AND TO THE BOTTOM SIDE OF MASONRY PLATE.
- ROUND ALL PTFE CORNERS TO ACCOMMODATE THE MACHINED RECESS IN STEEL GUIDE PLATE.
- PTFE ON THE SIDE OF GUIDE PLATE MUST BE PIGMENTED
- PRIOR TO THE APPLICATION OF ADHESIVE CLEAN ALL MATING STEEL AND PTFE SURFACES BY GRIT BLASTING AND DEGREASING. APPLY ADHESIVE AS PER THE MANUFACTURER'S RECOMMENDATION.
- WELDING TO BEARING PLATES AFTER ASSEMBLY IS PERMITTED PROVIDED WELDING PROCEDURES RESTRICT THE MAXIMUM TEMPERATURE IN THE AREAS OF THE DISC AND PTFE TO NO MORE THAN 225°F. CONTROL TEMPERATURE BY WELDING PROCEDURES AND TEMPERATURE INDICATING WAX PENCILS OR OTHER DEVICES APPROVED BY THE ENGINEER. PROTECT THE POLYETHER URETHANE AND PTFE MATERIALS FROM ANY WELDING HEAT, SPARKS AND FLASH IN ACCORDANCE WITH MANUFACTURERS RECOMMENDATIONS. AFTER WELDING IS COMPLETE, EXPOSED STEEL SHALL BE TOUCHED UP IN ACCORDANCE WITH THE SPECIFIED PAINT SYSTEM.
- MARK THE THICKER EDGE OF THE SOLE PLATE AS SUCH FOR THE PURPOSE OF FIELD IDENTIFICATION. PLACE MARK ON THE EDGE OF SOLE PLATE SO THAT IT WILL BE VISIBLE AFTER BEARING INSTALLATION.
- MARK CENTERLINE OF GUIDED AND NON-GUIDED DISC BEARINGS ON THE SIDES OF MASONRY PLATE AND SOLE PLATE. THE CENTERLINE IDENTIFICATION MARKS WILL BE USEFUL TO LOCATE OFFSET DISTANCES IN THE FIELD. USE INDELIBLE INK TO PLACE ALL MARKS.
- MARK EACH BEARING WITH THE NAME OF THE MANUFACTURER AND TYPE OR MODEL NUMBER, INSTALLATION LOCATION AND DATE OF MANUFACTURER. PLACE THE IDENTIFICATION MARK IN A PERMANENT MANNER AND LOCATION SO THAT IT IS VISIBLE AFTER ERECTION.
- ENSURE ALL BEARING SURFACES INCLUDING THE BEARING SEAT ARE LEVEL PRIOR TO INSTALLATION OF DISC BEARINGS IN ACCORDANCE WITH PUBLICATION 408.
- SHIPPING AND HANDLING OF BEARING SHALL BE IN ACCORDANCE WITH PUBLICATION 408, SECTION 1111.03(f).
- AFTER HANDLING AND INSTALLATION IS COMPLETE, ANY EXPOSED STEEL SHALL BE TOUCHED UP IN ACCORDANCE WITH THE SPECIFIED PAINT SYSTEM.
- BEARINGS SHALL BE TESTED IN ACCORDANCE WITH PUBLICATION 408, SECTION 1111.03(e).
- TESTING SHALL BE CONDUCTED AT A TESTING FACILITY WITH PRIOR EXPERIENCE TESTING BEARINGS OF THIS TYPE.

DISC BEARING MATERIALS:

- STRUCTURAL STEEL: AASHTO M270 (ASTM A709), GRADE 50W.
- ANCHOR BOLTS: ASTM F1554, GRADE 55
- NUTS: ASTM A563/A 563M, GRADE DH
- WASHERS:ASTM F436/ F436M, TYPE I
- GALVANIZING OF ANCHOR BOLTS, NUTS AND WASHERS: PUBLICATION 408, SECTION 1105.02 (S)
- STAINLESS STEEL: 13 GAUGE, ASTM A240 GRADE 30 TYPE 304 WITH AN ANSI 0.02 MIL SURFACE FINISH OR LESS
- DISC SHALL MEET THE APPLICABLE MATERIAL REQUIREMENTS OF THE AASHTO STANDARD SPECIFICATIONS FOR HIGHWAY BRIDGES, DIVISION II, SECTION 18.4.7.1. THE TOP AND BOTTOM SURFACES OF THE DISC SHALL BE ROUGHENED.
- PTFE SHEET: UNFILLED, DIMPLED AND LUBRICATED AND SHALL MEET THE APPLICABLE MATERIAL REQUIREMENTS PUBLICATION 408. ALL PTFE SHALL BE ETCHED ON ONE SIDE FOR BONDING INTO THE MACHINED RECESS.
- SHEAR RESISTING MECHANISM: ASTM A193 GR. B7.
- BEDDING MATERIAL: PER PUBLICATION 408, SECTION 1107.02(p). FABRIC PADS ARE INCIDENTAL TO DISC BEARINGS.

DISC BEARING MATERIALS DESIGN PARAMETERS:

- DESIGN BASED ON COMPOUND B, TYPE D DUROMETER = 62
- ALLOWABLE PRESSURE IN POLYETHER URETHANE DISC = 5000 PSI
- MAXIMUM AVERAGE CONTACT STRESS IN PTFE AT THE STRENGTH LIMIT STATE NOT TO EXCEED 3000 PSI.
- CONCRETE BEARING STRENGTH: $f'_{c\ min}$ 3000 PSI

Mark	Description	By	Chk'd.	Recm'd.	Date
	REVISIONS				

DESIGNED BY	RES
DRAWN BY	CB
CHECKED BY	MP

COMMONWEALTH OF PENNSYLVANIA
DEPARTMENT OF TRANSPORTATION

ARMSTRONG COUNTY
SR 1038 SECTION 150
SEG 0040 OFFSET 1110
SR 1038-150 STA 1956+35.83 AND SR 4025 OVER
BUFFALO AND PITTSBURGH RAILROAD
4 SPAN STEEL MULTI-GIRDER BRIDGE AND
SINGLE SPAN ROLLED BEAM T-SPAN
DISC BEARING NOTES

RECOMMENDED _____

SHEET 60 OF 97

S-27038

h:\projects\043\structure\PW_Kittanning\Final\disc bearing notes1.dgn 7/31/2007

A-00122496

DESIGN LOADS FOR FIXED DISC BEARINGS

BEARING LOCATION	BEARING MARK	LOAD COMBINATION	FACTORED LOADS								ROTATIONS (RADIANS)			
			VERTICAL				HORIZONTAL - Per Bearing							
			DL		LL+I		TRANSV.		LONGIT.		FAB. & INSTALL TOLERANCE	ALLOWANCE FOR UNCERTAINTIES	SERVICE ROTATION (MAX.)	TOTAL ROTATION
			MIN.	MAX.	MIN.	MAX.	MIN.	MAX.	MIN.	MAX.				
PIER 3 G1, G2, G3, G4 & G5	FDB1	STRENGTH - I	266.72	528.02	-48.02	453.39	---	---	32.13	32.13	0.010	0.010	0.003	0.023
		STRENGTH - II	266.72	528.02	-45.35	320.18	---	---	24.79	24.79	0.010	0.010	0.005	0.025
		STRENGTH - III	266.72	528.02	0.00	0.00	27.12	27.12	121.26	121.26	0.010	0.010	0.003	0.023
		STRENGTH - IV	444.53	614.58	0.00	0.00	---	---	---	---	0.010	0.010	0.003	0.023
		STRENGTH - V	266.72	528.02	-37.04	349.76	12.18	12.18	79.23	79.23	0.010	0.010	0.003	0.023
		EXTREME EVENT - I	266.72	528.02	0.00	0.00	30.51	101.71	102.44	341.45	0.010	0.010	0.003	0.023
		SERVICE - I	296.35	409.72	-27.44	259.08	10.24	10.24	64.14	64.14	0.010	0.010	0.003	0.023

DESIGN LOADS FOR GUIDED DISC BEARINGS

BEARING LOCATION	BEARING MARK	LOAD COMBINATION	FACTORED LOADS								ROTATIONS (RADIANS)				TOTAL MOVEMENT	
			VERTICAL				HORIZONTAL - Per Bearing									
			DL		LL+I		TRANSV.		LONGIT.		FAB. & INSTALL TOLERANCE	ALLOWANCE FOR UNCERTAINTIES	SERVICE ROTATION (MAX.)	TOTAL ROTATION	LONGIT. (IN)	TRANSV. (IN)
			MIN.	MAX.	MIN.	MAX.	MIN.	MAX.	MIN.	MAX.						
ABUTMENT 1 G2 & G4	GDB1	STRENGTH - I	77.67	140.85	-29.52	210.91	---	---	---	---	0.010	0.010	0.004	0.024	4.92	0.00
		STRENGTH - II	77.67	140.85	-32.87	250.63	---	---	---	---	0.010	0.010	0.006	0.026	4.92	0.00
		STRENGTH - III	77.67	140.85	0.00	0.00	35.53	35.53	---	---	0.010	0.010	0.004	0.024	4.92	0.00
		STRENGTH - IV	129.45	165.92	0.00	0.00	---	---	---	---	0.010	0.010	0.004	0.024	4.92	0.00
		STRENGTH - V	77.67	140.85	-22.77	162.70	15.95	15.95	---	---	0.010	0.010	0.004	0.024	4.92	0.00
		EXTREME EVENT - I	77.67	140.85	0.00	0.00	64.29	64.29	---	---	0.010	0.010	0.004	0.024	4.92	0.00
		SERVICE - I	86.30	110.61	-16.87	120.52	13.41	13.41	---	---	0.010	0.010	0.004	0.024	4.92	0.00
PIER 1 G2 & G4	GDB2	STRENGTH - I	266.34	471.30	-45.62	418.90	---	---	---	---	0.010	0.010	0.003	0.023	3.52	0.00
		STRENGTH - II	266.34	471.30	-43.08	320.44	---	---	---	---	0.010	0.010	0.005	0.025	3.52	0.00
		STRENGTH - III	266.34	471.30	0.00	0.00	79.78	79.78	---	---	0.010	0.010	0.003	0.023	3.52	0.00
		STRENGTH - IV	443.90	554.37	0.00	0.00	---	---	---	---	0.010	0.010	0.003	0.023	3.52	0.00
		STRENGTH - V	266.34	471.30	-35.19	323.15	35.82	35.82	---	---	0.010	0.010	0.003	0.023	3.52	0.00
		EXTREME EVENT - I	266.34	471.30	0.00	0.00	217.99	217.99	---	---	0.010	0.010	0.003	0.023	3.52	0.00
		SERVICE - I	295.93	389.58	-26.07	239.37	30.12	30.12	---	---	0.010	0.010	0.003	0.023	3.52	0.00
PIER 2 G2 & G4	GDB2	STRENGTH - I	269.91	465.49	-63.02	427.53	---	---	---	---	0.010	0.010	0.003	0.023	1.76	0.00
		STRENGTH - II	269.91	465.49	-38.76	320.38	---	---	---	---	0.010	0.010	0.005	0.025	1.76	0.00
		STRENGTH - III	269.91	465.49	0.00	0.00	88.51	88.51	---	---	0.010	0.010	0.003	0.023	1.76	0.00
		STRENGTH - IV	449.85	549.30	0.00	0.00	---	---	---	---	0.010	0.010	0.003	0.023	1.76	0.00
		STRENGTH - V	269.91	465.49	-48.61	329.81	39.74	39.74	---	---	0.010	0.010	0.003	0.023	1.76	0.00
		EXTREME EVENT - I	269.91	465.49	0.00	0.00	218.72	218.72	---	---	0.010	0.010	0.003	0.023	1.76	0.00
		SERVICE - I	299.90	366.20	-36.01	244.30	33.42	33.42	---	---	0.010	0.010	0.003	0.023	1.76	0.00
ABUTMENT 2 G2 & G4	GDB3 GDB4	STRENGTH - I	79.84	208.10	-31.83	231.30	---	---	---	---	0.010	0.010	0.004	0.024	1.42	0.00
		STRENGTH - II	79.84	208.10	-35.81	251.24	---	---	---	---	0.010	0.010	0.006	0.026	1.42	0.00
		STRENGTH - III	79.84	208.10	0.00	0.00	35.53	35.53	---	---	0.010	0.010	0.004	0.024	1.42	0.00
		STRENGTH - IV	133.07	238.16	0.00	0.00	---	---	---	---	0.010	0.010	0.004	0.024	1.42	0.00
		STRENGTH - V	79.84	208.10	-24.56	178.43	15.95	15.95	---	---	0.010	0.010	0.004	0.024	1.42	0.00
		EXTREME EVENT - I	79.84	208.10	0.00	0.00	98.36	98.36	---	---	0.010	0.010	0.004	0.024	1.42	0.00
		SERVICE - I	88.71	158.77	-18.19	132.17	13.41	13.41	---	---	0.010	0.010	0.004	0.024	1.42	0.00

NOTES:
FRICTIONAL RESISTANCE OF BEARINGS SLIDE SURFACES IS EXCLUDED FROM HORIZONTAL LOADS ON BEARINGS.
MINIMUM HORIZONTAL LOAD CAPACITY FOR FIXED OR EXPANSION SHALL BE 10 PERCENT OF THE VERTICAL LOAD CAPACITY.
PEDESTRIAN FORCE EFFECTS WERE DETERMINED TO NOT BE A GOVERNING LOAD CASE. THEREFORE STRENGTH IP LIMIT STATE IS NOT EVALUATED FOR BEARING DESIGN.
TOTAL DESIGN MOVEMENT IS DUE TO TEMPERATURE RANGE OF 156 °F FOR STEEL STRUCTURES (DM4 3.12.2.1).

Mark	Description	By	Chk'd.	Recm'd.	Date
REVISIONS					

DESIGNED BY	RES
DRAWN BY	CB
CHECKED BY	MP

COMMONWEALTH OF PENNSYLVANIA
DEPARTMENT OF TRANSPORTATION

ARMSTRONG COUNTY
SR 1038 SECTION 150
SEG 0040 OFFSET 1110
SR 1038-150 STA 1956+35.83 AND SR 4025 OVER
BUFFALO AND PITTSBURGH RAILROAD
4 SPAN STEEL MULTI-GIRDER BRIDGE AND
SINGLE SPAN ROLLED BEAM T-SPAN
DISC BEARING DESIGN LOADS 1

RECOMMENDED _____

SHEET 61 OF 97

S-27038

A-00122496

DESIGN LOADS FOR NON-GUIDED DISC BEARINGS

BEARING LOCATION	BEARING MARK	LOAD COMBINATION	FACTORED LOADS								ROTATIONS (RADIANS)				TOTAL MOVEMENT	
			VERTICAL				HORIZONTAL - Per Bearing									
			DL		LL+I		TRANSV.		LONGIT.		FAB. & INSTALL	ALLOWANCE FOR	SERVICE	TOTAL	LONGIT. (IN)	TRANSV. (IN)
			MIN.	MAX.	MIN.	MAX.	MIN.	MAX.	MIN.	MAX.	TOLERANCE	UNCERTAINTIES	ROTATION (MAX.)	ROTATION		
ABUTMENT 1 G1, G3 & G5	EDB1	STRENGTH - I	77.67	140.85	-28.52	210.91	—	—	—	—	0.010	0.010	0.004	0.024	4.92	0.00
		STRENGTH - II	77.67	140.85	-32.87	250.63	—	—	—	—	0.010	0.010	0.006	0.026	4.92	0.00
		STRENGTH - III	77.67	140.85	0.00	0.00	—	—	—	—	0.010	0.010	0.004	0.024	4.92	0.00
		STRENGTH - IV	129.45	165.92	0.00	0.00	—	—	—	—	0.010	0.010	0.004	0.024	4.92	0.00
		STRENGTH - V	77.67	140.85	-22.77	162.70	—	—	—	—	0.010	0.010	0.004	0.024	4.92	0.00
		EXTREME EVENT - I	77.67	140.85	0.00	0.00	—	—	—	—	0.010	0.010	0.004	0.024	4.92	0.00
		SERVICE - I	86.30	110.61	-16.87	120.52	—	—	—	—	0.010	0.010	0.004	0.024	4.92	0.00
PIER 1 G1, G3 & G5	EDB2	STRENGTH - I	266.34	471.30	-45.62	418.90	—	—	—	—	0.010	0.010	0.003	0.023	3.52	0.00
		STRENGTH - II	266.34	471.30	-43.08	320.44	—	—	—	—	0.010	0.010	0.005	0.025	3.52	0.00
		STRENGTH - III	266.34	471.30	0.00	0.00	—	—	—	—	0.010	0.010	0.003	0.023	3.52	0.00
		STRENGTH - IV	443.90	564.37	0.00	0.00	—	—	—	—	0.010	0.010	0.003	0.023	3.52	0.00
		STRENGTH - V	266.34	471.30	-35.19	323.15	—	—	—	—	0.010	0.010	0.003	0.023	3.52	0.00
		EXTREME EVENT - I	266.34	471.30	0.00	0.00	—	—	—	—	0.010	0.010	0.003	0.023	3.52	0.00
		SERVICE - I	295.93	369.58	-26.07	239.37	—	—	—	—	0.010	0.010	0.003	0.023	3.52	0.00
PIER 2 G1, G3 & G5	EDB2	STRENGTH - I	269.91	465.49	-63.02	427.53	—	—	—	—	0.010	0.010	0.003	0.023	1.76	0.00
		STRENGTH - II	269.91	465.49	-38.76	320.38	—	—	—	—	0.010	0.010	0.005	0.025	1.76	0.00
		STRENGTH - III	269.91	465.49	0.00	0.00	—	—	—	—	0.010	0.010	0.003	0.023	1.76	0.00
		STRENGTH - IV	449.85	549.30	0.00	0.00	—	—	—	—	0.010	0.010	0.003	0.023	1.76	0.00
		STRENGTH - V	269.91	465.49	-48.61	329.81	—	—	—	—	0.010	0.010	0.003	0.023	1.76	0.00
		EXTREME EVENT - I	269.91	465.49	0.00	0.00	—	—	—	—	0.010	0.010	0.003	0.023	1.76	0.00
		SERVICE - I	299.90	366.20	-36.01	244.30	—	—	—	—	0.010	0.010	0.003	0.023	1.76	0.00
ABUTMENT 2 G1, G3 & G5	EDB3 EDB4 EDB5	STRENGTH - I	79.84	208.10	-31.83	231.30	—	—	—	—	0.010	0.010	0.004	0.024	1.42	0.00
		STRENGTH - II	79.84	208.10	-35.81	251.24	—	—	—	—	0.010	0.010	0.006	0.026	1.42	0.00
		STRENGTH - III	79.84	208.10	0.00	0.00	—	—	—	—	0.010	0.010	0.004	0.024	1.42	0.00
		STRENGTH - IV	133.07	238.16	0.00	0.00	—	—	—	—	0.010	0.010	0.004	0.024	1.42	0.00
		STRENGTH - V	79.84	208.10	-24.56	178.43	—	—	—	—	0.010	0.010	0.004	0.024	1.42	0.00
		EXTREME EVENT - I	79.84	208.10	0.00	0.00	—	—	—	—	0.010	0.010	0.004	0.024	1.42	0.00
		SERVICE - I	88.71	158.77	-18.19	132.17	—	—	—	—	0.010	0.010	0.004	0.024	1.42	0.00
ABUTMENT 3 B1, B4, B5, B6 & B9	EDB6 EDB7 EDB8	STRENGTH - I	26.47	161.05	0.00	160.09	—	—	—	—	0.010	0.010	0.004	0.024	0.60	1.42
		STRENGTH - II	26.47	161.05	0.00	151.63	—	—	—	—	0.010	0.010	0.006	0.026	0.60	1.42
		STRENGTH - III	26.47	161.05	0.00	0.00	—	—	—	—	0.010	0.010	0.004	0.024	0.60	1.42
		STRENGTH - IV	44.12	191.25	0.00	0.00	—	—	—	—	0.010	0.010	0.004	0.024	0.60	1.42
		STRENGTH - V	26.47	161.05	0.00	123.50	—	—	—	—	0.010	0.010	0.004	0.024	0.60	1.42
		EXTREME EVENT - I	26.47	161.05	0.00	0.00	—	—	—	—	0.010	0.010	0.004	0.024	0.60	1.42
		SERVICE - I	29.41	127.50	0.00	91.48	—	—	—	—	0.010	0.010	0.004	0.024	0.60	1.42

NOTES:
FRICTIONAL RESISTANCE OF BEARINGS SLIDE SURFACES IS EXCLUDED FROM HORIZONTAL LOADS ON BEARINGS.
MINIMUM HORIZONTAL LOAD CAPACITY FOR FIXED OR EXPANSION SHALL BE 10 PERCENT OF THE VERTICAL LOAD CAPACITY.
PEDESTRIAN FORCE EFFECTS WERE DETERMINED TO NOT BE A GOVERNING LOAD CASE, THEREFORE STRENGTH IP LIMIT STATE IS NOT EVALUATED FOR BEARING DESIGN.
TOTAL DESIGN MOVEMENT IS DUE TO TEMPERATURE RANGE OF 156 °F FOR STEEL STRUCTURES (DM4 3.12.2.1).

DESIGN LOADS FOR NON-GUIDED DISC BEARINGS - WINGWALL A

BEARING LOCATION	BEARING MARK	LOAD COMBINATION	FACTORED LOADS								ROTATIONS (RADIANS)				TOTAL MOVEMENT	
			VERTICAL				HORIZONTAL - Per Bearing									
			DL		LL+I		TRANSV.		LONGIT.		FAB. & INSTALL	ALLOWANCE FOR	SERVICE	TOTAL	LONGIT. (IN)	TRANSV. (IN)
			MIN.	MAX.	MIN.	MAX.	MIN.	MAX.	MIN.	MAX.	TOLERANCE	UNCERTAINTIES	ROTATION (MAX.)	ROTATION		
WINGWALL A ABUTMENT 1	WAEDB1	STRENGTH - I	14.05	22.32	-6.44	62.49	-	-	-	-	0.01	0.01	0.001	0.021	0.70	0.00
		STRENGTH - II	14.05	22.32	-6.10	56.38	-	-	-	-	0.01	0.01	0.001	0.021	0.70	0.00
		STRENGTH - III	14.05	22.32	0.00	0.00	-	-	-	-	0.01	0.01	0.001	0.021	0.70	0.00
		STRENGTH - IV	23.42	26.22	0.00	0.00	-	-	-	-	0.01	0.01	0.001	0.021	0.70	0.00
		STRENGTH - V	14.05	22.32	-4.97	48.21	-	-	-	-	0.01	0.01	0.001	0.021	0.70	0.00
		EXTREME EVENT - I	14.05	22.32	0.00	0.00	-	-	-	-	0.01	0.01	0.001	0.021	0.70	0.00
		SERVICE - I	15.61	17.48	-3.68	35.71	-	-	-	-	0.01	0.01	0.001	0.021	0.70	0.00

NOTES:
FRICTIONAL RESISTANCE OF BEARINGS SLIDE SURFACES IS EXCLUDED FROM HORIZONTAL LOADS ON BEARINGS.
MINIMUM HORIZONTAL LOAD CAPACITY FOR NON-GUIDED EXPANSION BEARINGS SHALL BE 10 PERCENT OF THE VERTICAL LOAD CAPACITY.
PEDESTRIAN FORCE EFFECTS WERE DETERMINED TO NOT BE A GOVERNING LOAD CASE, THEREFORE STRENGTH IP LIMIT STATE IS NOT EVALUATED FOR BEARING DESIGN.
TOTAL DESIGN MOVEMENT IS DUE TO TEMPERATURE RANGE OF 116 °F FOR CONCRETE STRUCTURES (DM4 3.12.2.1).

Mark	Description	By	Chk'd.	Recm'd.	Date
REVISIONS					

DESIGNED BY	RES
DRAWN BY	CB
CHECKED BY	MP

COMMONWEALTH OF PENNSYLVANIA
DEPARTMENT OF TRANSPORTATION

ARMSTRONG COUNTY
SR 1038 SECTION 150
SEG 0040 OFFSET 1110
SR 1038-150 STA 1956+35.83 AND SR 4025 OVER
BUFFALO AND PITTSBURGH RAILROAD
4 SPAN STEEL MULTI-GIRDER BRIDGE AND
SINGLE SPAN ROLLED BEAM T-SPAN
DISC BEARING DESIGN LOADS 2

RECOMMENDED _____

SHEET 62 OF 97

S-27038

A-00122496

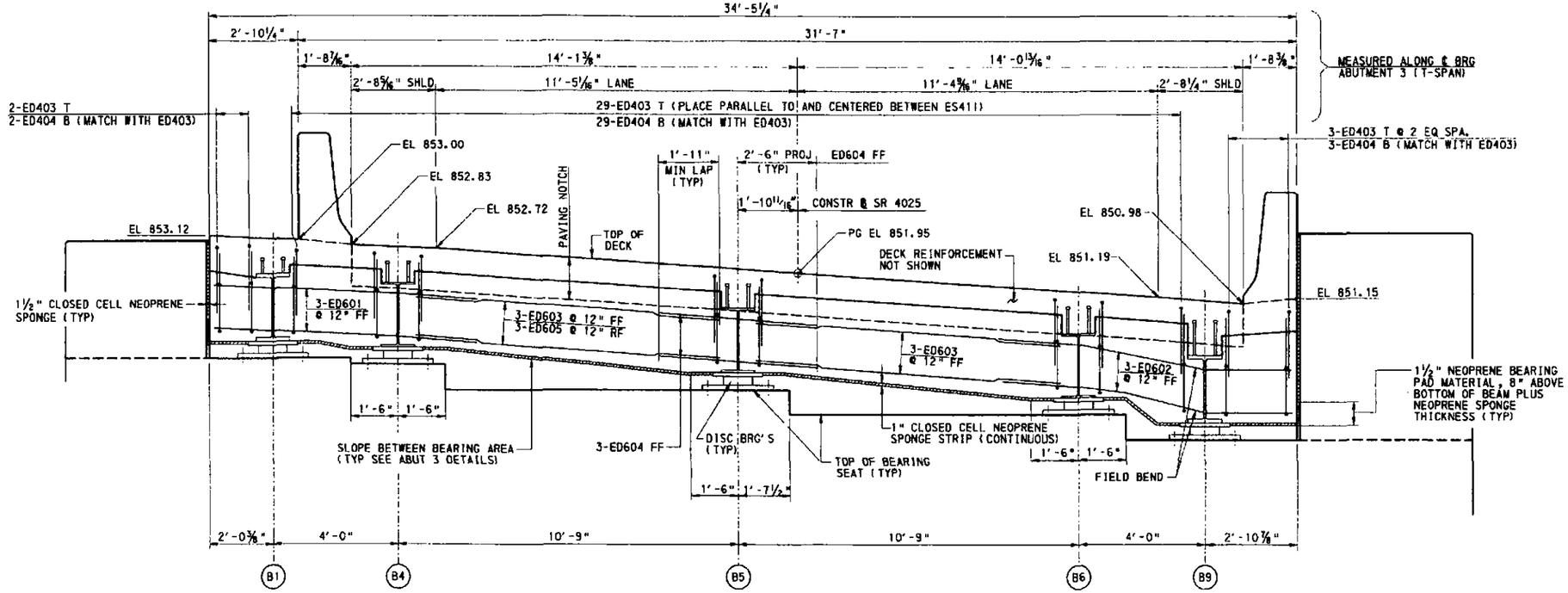

CONCRETE END DIAPHRAGM ABUTMENT 3 (T-SPAN)

(ALL ELEVATIONS ARE TAKEN ALONG ℄ BRG)

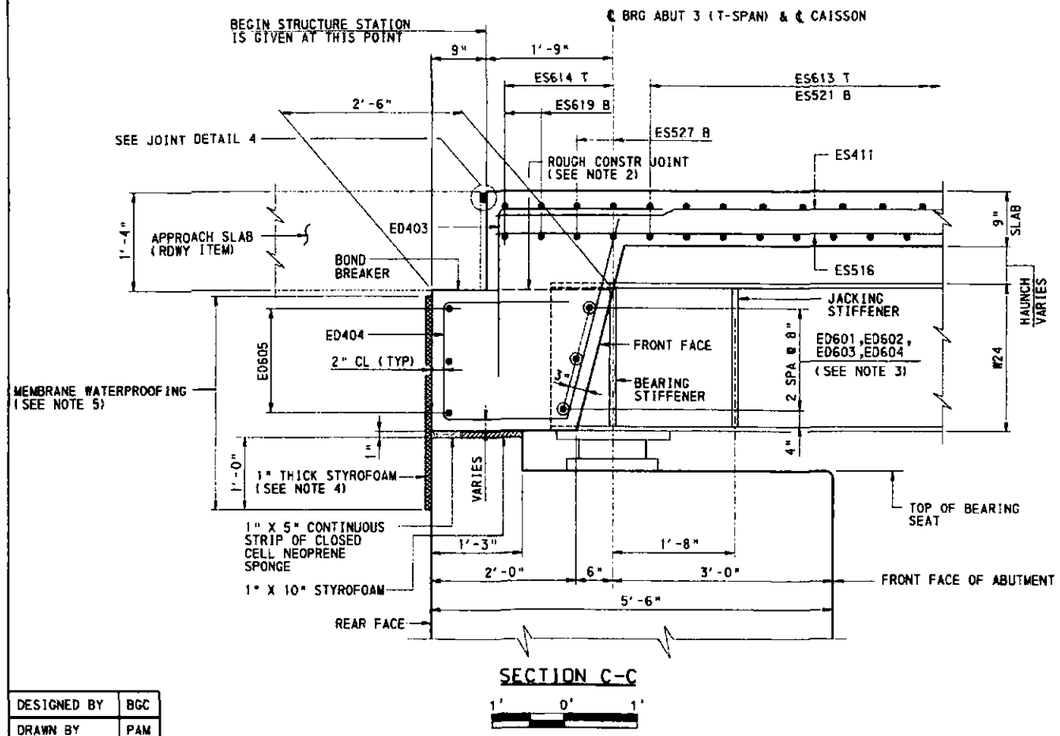

SECTION C-C

1' 0' 1'

LEGEND:

FF DENOTES FRONT FACE
RF DENOTES REAR FACE

NOTE 2 PLACE PORTION OF DIAPHRAGM TO THE CONSTRUCTION JOINT INDICATED. WAIT TWO HOURS MINIMUM BEFORE PLACING DECK CONCRETE. CONSTRUCTION JOINT MAY BE ELIMINATED AND DIAPHRAGM POURED MONOLITHIC WITH DECK USING CLASS AAA CEMENT CONCRETE AT NO ADDITIONAL COST TO THE DEPARTMENT.

NOTE 3 PROVIDE 1"ø OR 1½" ø HOLES IN WEB FOR BARS THROUGH BEAM WEBS. FOR BEAM DETAIL SEE SHEET 46.

NOTE 4 PLACE 1" THICK STYROFOAM ASTM C578, TYPE I, OVER WATERPROOFING ON REAR FACE OF CONCRETE DIAPHRAGM. END STYROFOAM 1" BELOW TOP OF SUBBASE.

NOTE 5 FOR TYPICAL WATERPROOFING DETAILS SEE STANDARD DWG BC-788M.

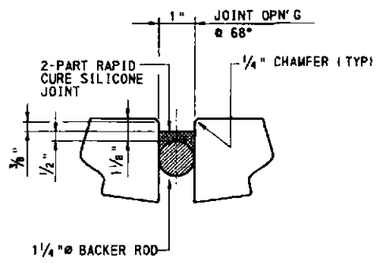

JOINT DETAIL 4

NTS

NOTES:

- FOR GENERAL NOTES SEE SHEETS 5 AND 6.
- FOR ABUTMENT 3 DETAILS SEE SHEETS 28 THRU 31.
- FOR FRAMING PLAN AND BEAM DETAILS SEE SHEETS 40, 45, 46, AND 47.
- FOR T-SPAN SEE DECK PLANS 3 & 4 SHEETS 68 AND 69.
- FOR FINISHED DECK ELEVATIONS SEE SHEETS 74 AND 75.
- FOR REINFORCEMENT BAR SCHEDULE SEE SHEET 87.

Mark	Description	By	Chk'd.	Recm'd.	Date
REVISIONS					

2' 1' 0' 2'

UNLESS NOTED

DESIGNED BY	BGC
DRAWN BY	PAM
CHECKED BY	RLG

COMMONWEALTH OF PENNSYLVANIA
DEPARTMENT OF TRANSPORTATION

ARMSTRONG COUNTY
SR 1038 SECTION 150
SEG 0040 OFFSET 1110
SR 1038-150 STA 1956+35.83 AND SR 4025 OVER
BUFFALO AND PITTSBURGH RAILROAD
4 SPAN STEEL MULTI-GIRDER BRIDGE AND
SINGLE SPAN ROLLED BEAM T-SPAN
CONCRETE DIAPHRAGM DETAILS ABUT 3

RECOMMENDED JUL 6 2007

SHEET 63 OF 97

S-27038

A-00122496

I:\dfs\octa\PJ432\ref-octu-bar_3\transmpgs\mod4t-span conc diagm.dgn 7/7/2007

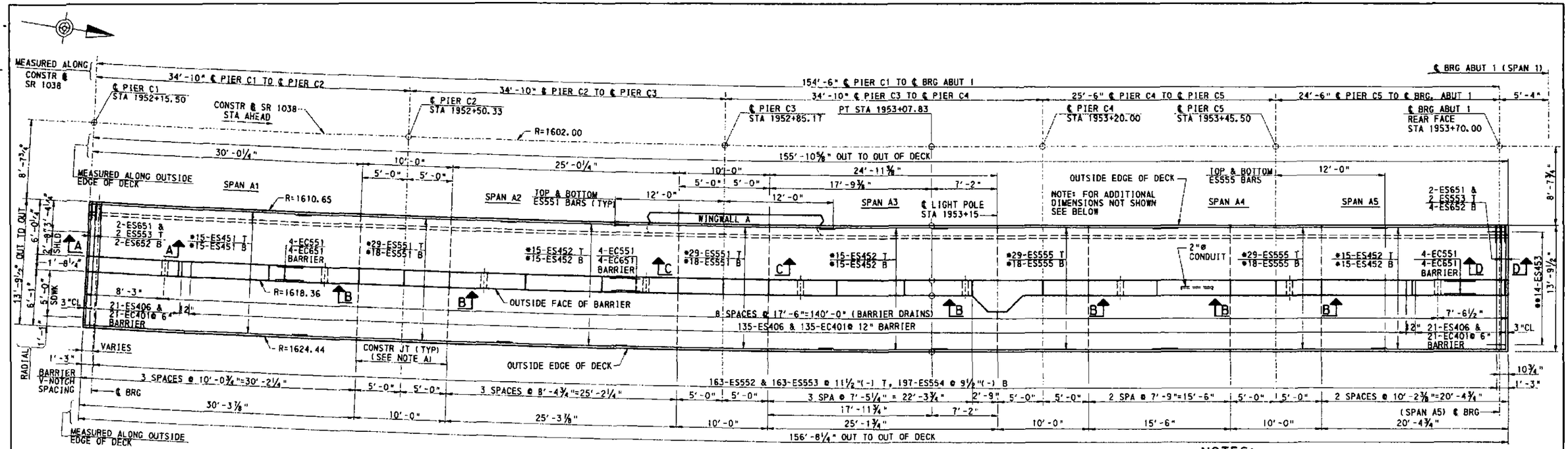

NOTE A (CONSTR JT)

SAW CUT TRANSVERSE DECK CONSTRUCTION JOINTS ¼" WIDE x ¾" DEEP AND SEAL WITH 60 DUROMETER PURE POLYUREA POLYMER SEALANT IN ACCORDANCE WITH MANUFACTURER'S RECOMMENDATIONS.

DECK PLAN WINGWALL A

(ALL DIMENSIONS ARE HORIZONTAL DIMENSIONS)

4' 0' 4'

NOTES:

- FOR GENERAL NOTES SEE SHEETS 5 AND 6
- FOR SECTIONS A-A, B-B, C-C AND D-D SEE SHEET 32
- FOR TYPICAL DECK SECTIONS SEE SHEET 65
- FOR FINISHED DECK ELEVATIONS SEE SHEET 75
- FOR LIGHT POLE BLISTER DETAILS SEE DETAIL A SHEET 73
- FOR REINFORCEMENT BAR SCHEDULE SEE SHEET 83
- FOR DECK PLAN SPAN 1 SEE SHEET 66
- FOR DETAILS AND POST SPACING FOR PA HT BRIDGE BARRIER SEE STANDARD DRAWING BC-707M.
- FOR DETAILS AND POST SPACING FOR PEDESTRAIN RAILING SEE STANDARD DRAWING BC-716M.
- FOR CONDUIT DETAILS SEE STANDARD DRAWING BC-721M.
- FOR BARRIER FLOOR DRAIN DETAILS SEE DRAWING BC-751M
- FOR BARRIER V-NOTCH DETAIL SEE STANDARD DRAWING BC-752M.
- SPACE TRANSVERSE DECK REINFORCEMENT RADIALLY ALONG OUTSIDE EDGE OF RIGHT FASCIA IN CURVED PORTION OF DECK

MIN. LONGITUDINAL REINF. SPLICE LENGTHS

BAR SIZE	DECK SLAB	BARRIER & SIDEWALK
#4	2'-1"	2'-1"
#5	2'-7"	2'-7"
#6	3'-1"	3'-1"

LEGEND

- • SEE TYPICAL SECTION FOR SPACING AND PLACEMENT
- •• CENTERED BETWEEN TOP LONGITUDINAL REINFORCEMENT BARS
- T DENOTES TOP
- B DENOTES BOTTOM
- (1) DENOTES PLACEMENT NUMBER

DECK PLACEMENT SEQUENCE

STEP NO.

1. CAST PLACEMENT 1 SHEAR BLOCKS AND END DIAPHRAGMS BETWEEN BEAMS AT PIER & ABUTMENT).
2. CAST PLACEMENT 2 (POSITIVE MOMENT REGION).
3. CAST PLACEMENT 3 (CONTINUITY DIAPHRAGMS AT PIERS).
4. CAST PLACEMENT 4 (NEGATIVE MOMENT REGION) MINIMUM 2 HOURS AFTER PLACEMENT OF CONTINUITY DIAPHRAGMS.
5. CAST BARRIER IN POSITIVE MOMENT REGION. THEN NEGATIVE MOMENT REGION. UNLESS CONTINUOUS CASTING CAN BE MAINTAINED.

NOTE

THE CONTRACTOR MAY USE AN ALTERNATE SLAB PLACEMENT SEQUENCE IF THE PROVISIONS OF DM-4 SECTION 2 (D2.5.3) ARE MET AND APPROVED BY THE DEPARTMENT.

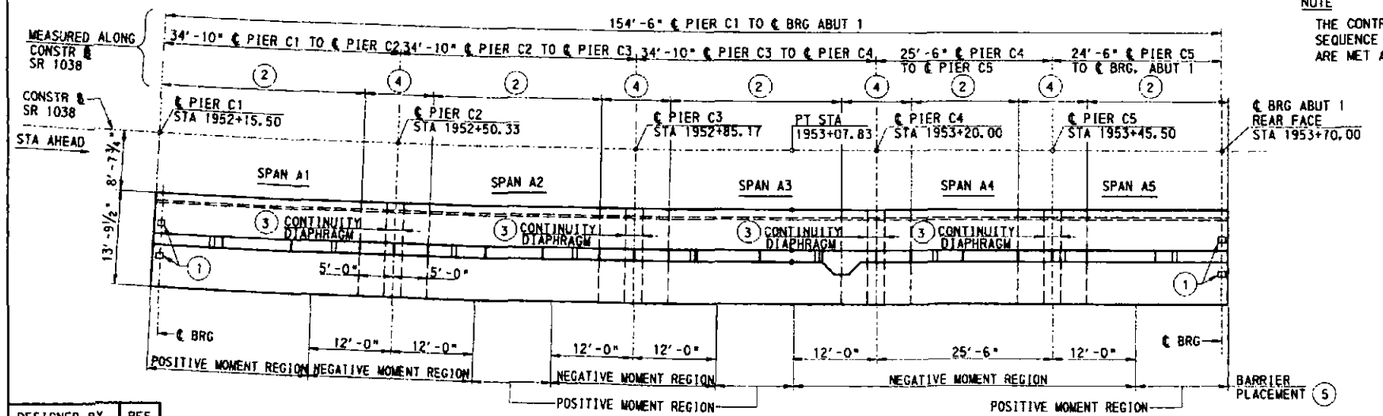

DECK POURING SEQUENCE

NTS

DESIGNED BY	RES
DRAWN BY	RLG
CHECKED BY	PAM

Mark	Description	By	Chk'd.	Recm'd.	Date
REVISIONS					

COMMONWEALTH OF PENNSYLVANIA
DEPARTMENT OF TRANSPORTATION

ARMSTRONG COUNTY
SR 1038 SECTION 150

SEG 0040 OFFSET 1110
SR 1038-150 STA 1956+35.83 AND SR 4025 OVER BUFFALO AND PITTSBURGH RAILROAD
4 SPAN STEEL MULTI-GIRDER BRIDGE AND SINGLE SPAN ROLLED BEAM T-SPAN
DECK PLAN WINGWALL A

COMMONWEALTH OF PENNSYLVANIA PROFESSIONAL KEITH A. MICHAEL ENGINEER

RECOMMENDED JUL 5 2000

SHEET 64 OF 97

S-27038

A-00122496

h:\projects\0412\structure\MXT\contingency\final\deck1.dgn 7/5/2001

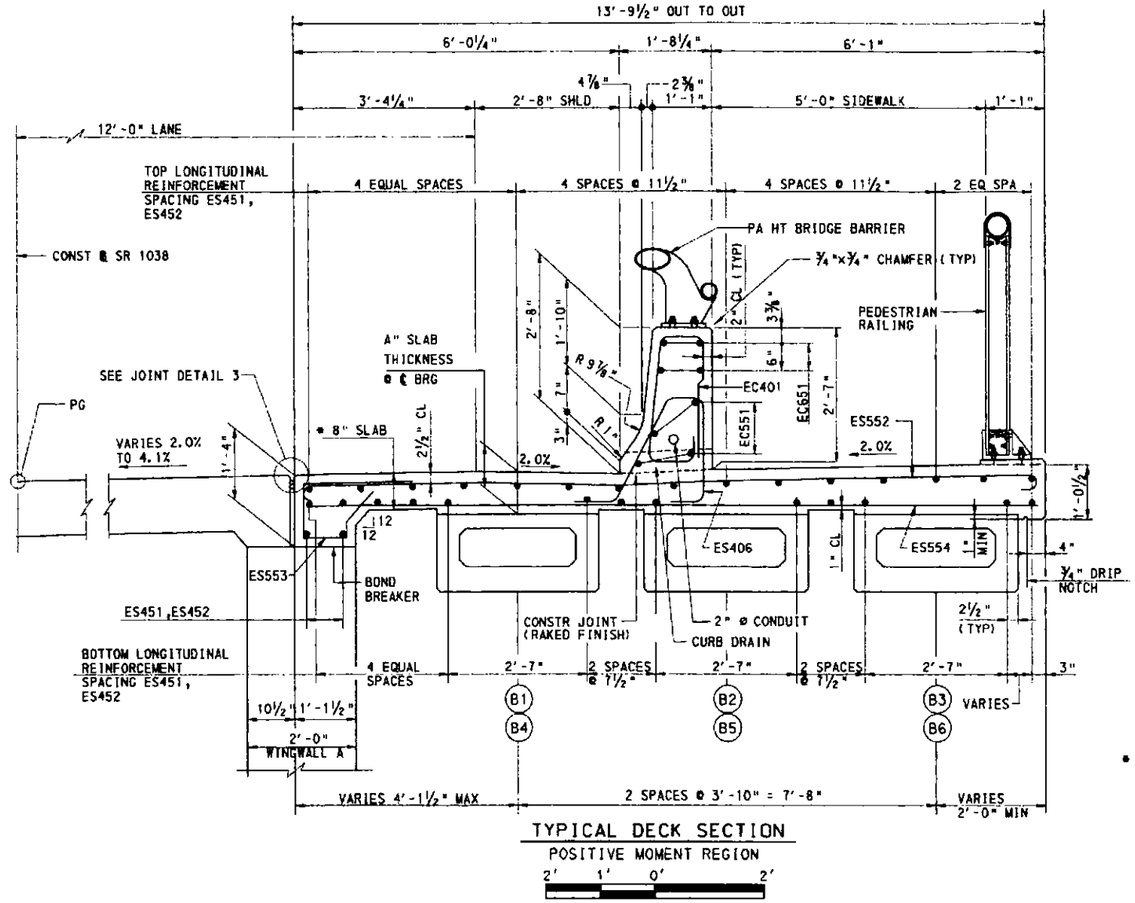

TYPICAL DECK SECTION
POSITIVE MOMENT REGION
2' 1' 0' 2'

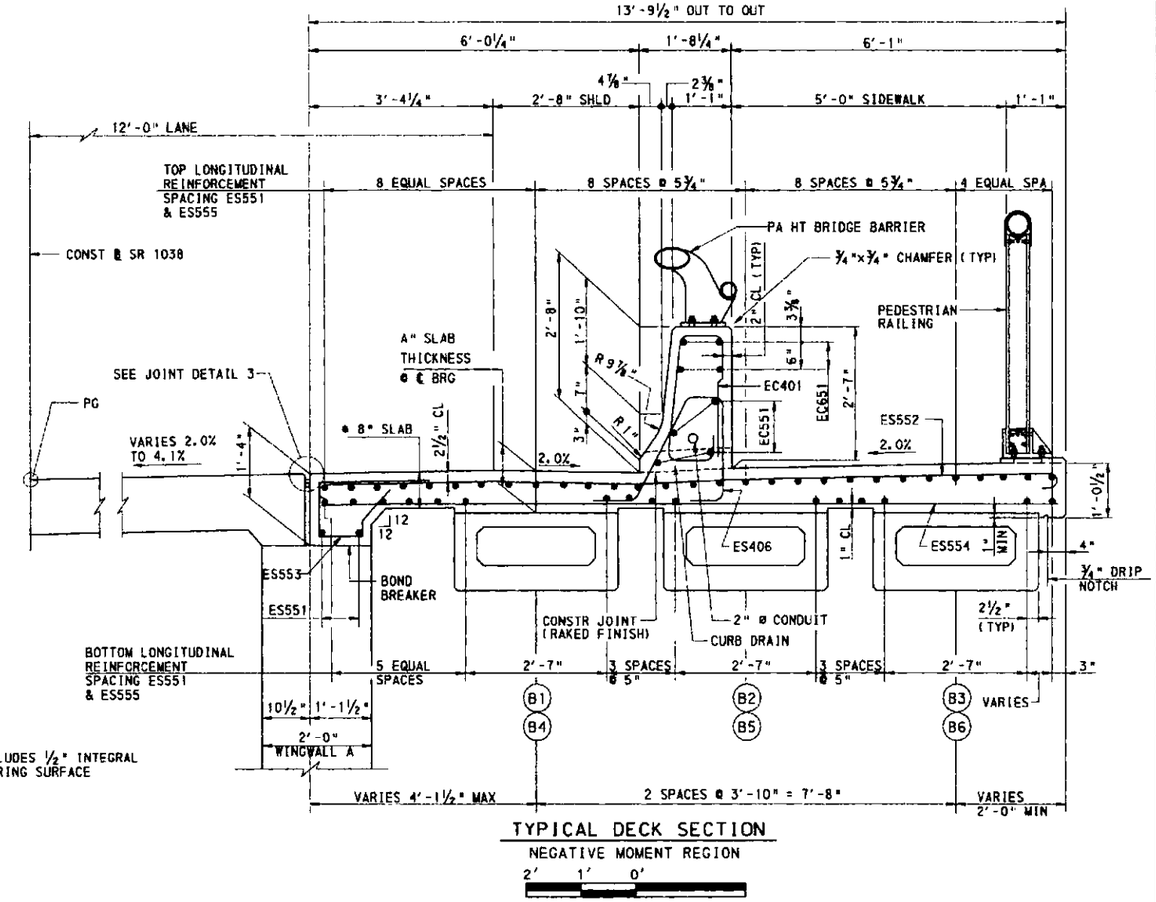

TYPICAL DECK SECTION
NEGATIVE MOMENT REGION
2' 1' 0'

* INCLUDES ½" INTEGRAL WEARING SURFACE

DIMENSION "A" SLAB THICKNESS AT ℄ BEARINGS

SPAN A1			SPAN A2			SPAN A3			SPAN A4			SPAN A5		
BEAM NO.	PIER C1	PIER C2	BEAM NO.	PIER C2	PIER C3	BEAM NO.	PIER C3	PIER C4	BEAM NO.	PIER C4	PIER C5	BEAM NO.	PIER C5	ABUT 1
B1	9½"	9½"	B1	9½"	9½"	B1	9½"	9½"	B4	9½"	9½"	B4	9½"	9½"
B2	10"	10⅛"	B2	10"	10⅛"	B2	10"	10⅛"	B5	10⅛"	10⅛"	B5	10⅛"	10⅛"
B3	11"	11"	B3	11"	11"	B3	11"	11"	B6	11"	11"	B6	11"	11"

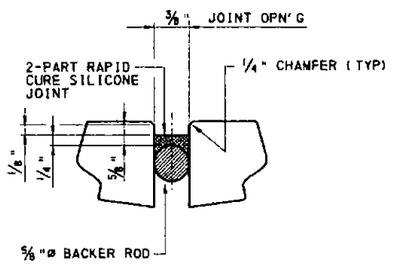

JOINT DETAIL 3
NTS

Mark	Description	By	Chk'd.	Recm'd.	Date
REVISIONS					

NOTES:

- FOR GENERAL NOTES SEE SHEETS 5 AND 6
- FOR FRAMING PLAN SEE SHEET 32
- FOR BEAM DETAILS SEE SHEETS 33 AND 34
- FOR DECK PLAN SEE SHEET 64
- FOR REINFORCEMENT BAR SCHEDULE SEE SHEET 83
- FOR DETAILS AND POST SPACING FOR PA HT BRIDGE BARRIER SEE STANDARD DRAWING BC-707M.
- FOR DETAILS AND POST SPACING FOR PEDESTRAIN RAILING SEE STANDARD DRAWING BC-716M.
- FOR CONDUIT DETAILS SEE STANDARD DRAWING BC-721M.
- FOR BARRIER V-NOTCH DETAIL SEE STANDARD DRAWING BC-752M.
- FOR DRIP NOTCH DETAIL SEE STANDARD DRAWING BC-775M.

DESIGNED BY	RES
DRAWN BY	RLG
CHECKED BY	PAM

COMMONWEALTH OF PENNSYLVANIA
DEPARTMENT OF TRANSPORTATION

ARMSTRONG COUNTY
SR 1038 SECTION 150
SEG 0040 OFFSET 1110
SR 1038-150 STA 1956+35.83 AND SR 4025 OVER BUFFALO AND PITTSBURGH RAILROAD
4 SPAN STEEL MULTI-GIRDER BRIDGE AND SINGLE SPAN ROLLED BEAM T-SPAN
TYPICAL DECK SECTION WINGWALL A

RECOMMENDED _____

SHEET 65 OF 97

S-27038

A-00122496

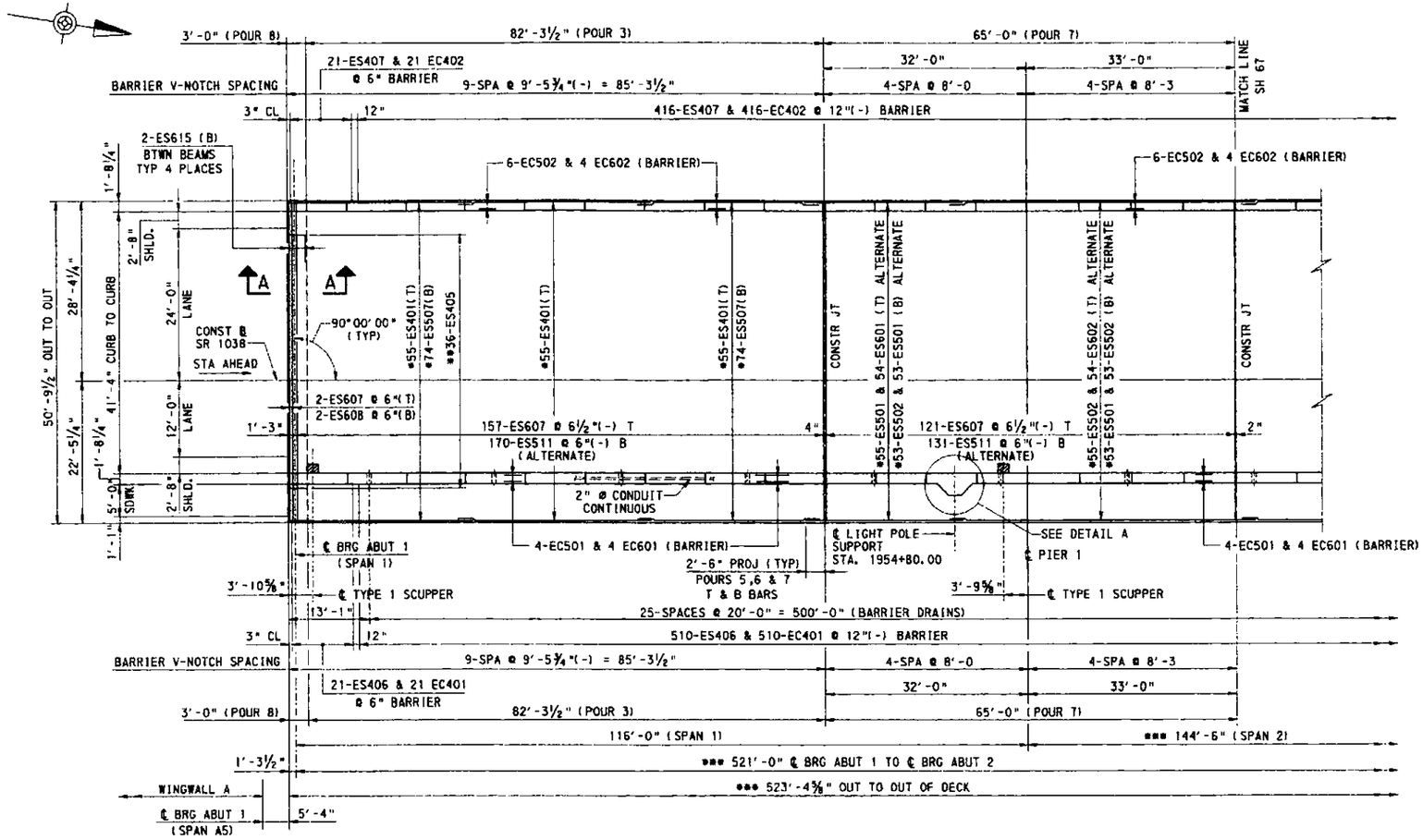

DECK PLAN 1

(ALL DIMENSIONS ARE HORIZONTAL DIMENSIONS)

MIN. LONGITUDINAL REINF. SPLICE LENGTHS		
BAR SIZE	DECK SLAB	BARRIER & SIDEWALK
#4	2'-1"	2'-1"
#5	2'-7"	2'-7"
#6	3'-1"	3'-1"

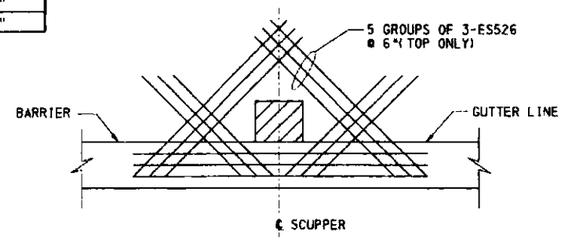

NOTE:

- CUT AND/OR REPOSITION DECK REINFORCEMENT TO ACCOMODATE SCUPPERS

ADDITIONAL REINF. AT SCUPPERS

(TYPICAL AT 11 LOCATIONS)
NTS

NOTES:

- FOR GENERAL NOTES SHEETS 5 AND 6.
- FOR SECTION A-A SEE SHEET 71.
- FOR ADDITIONAL DECK REINFORCEMENT AT SCUPPERS SEE SHEET 66.
- FOR DECK POURING SEQUENCE SEE SHEET 70.
- FOR TYPICAL DECK SECTIONS SEE SHEETS 70, 71, AND 72.
- FOR DECK PLAN 2 SEE SHEET 67.
- FOR DECK PLAN 3 SEE SHEET 68.
- FOR DECK PLAN 4 SEE SHEET 69.
- FOR LIGHT POLE SUPPORT DETAILS SEE DETAIL A SHEET 73.
- FOR FINISHED DECK ELEVATIONS SEE SHEETS 74 AND 75.
- FOR DRAINAGE DETAILS SEE SHEETS 78, 79, AND 80.
- FOR REINFORCEMENT BAR SCHEDULE SEE SHEET 87
- FOR TOOTH EXPANSION DAM AT ABUTMENT 1 SEE SHEETS 76 AND 77.
- FOR DECK PLAN WINGWALL A SEE SHEET 64.
- PLACE LONGITUDINAL DECK REINFORCEMENT PARALLEL TO GIRDERS
- FOR BARRIER DRAIN DETAILS SEE STANDARD DRAWING BC-751M.
- FOR ADDITIONAL HAUNCH DETAILS AT GIRDERS G1 & G2 SEE DECK PLAN 2 SHEET 67.

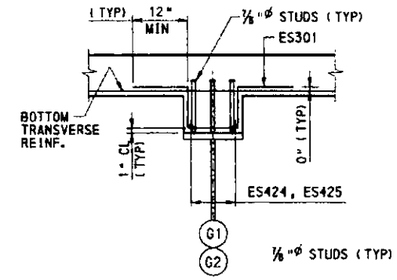

TYP HAUNCH REINFORCEMENT DETAIL U.N.

(SR 1038)

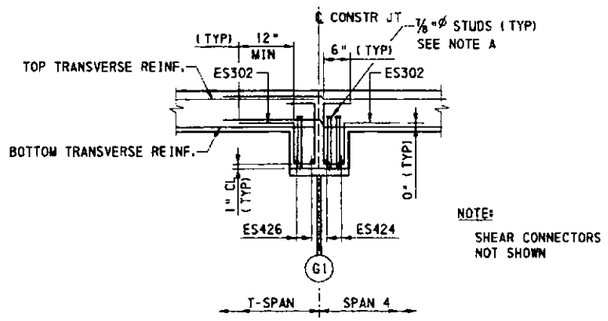

NOTE:
SHEAR CONNECTORS NOT SHOWN

HAUNCH REINFORCEMENT AT CONSTR JT DETAIL A

(SR 1038)

LEGEND

- * SEE TYPICAL SECTION FOR SPACING AND PLACEMENT
- ** CENTERED BETWEEN TOP LONGITUDINAL REINFORCEMENT BETWEEN GIRDER FLANGES
- *** MEASURED ALONG CONSTR ℄ SR 1038

NOTE A: STAGGER SHEAR CONNECTORS AS REQUIRED TO MAINTAIN 3½" MIN c/c AND TO CLEAR CONSTRUCTION JOINT AND HAUNCH REINFORCEMENT

Mark	Description	By	Chk'd.	Recm'd.	Date
REVISIONS					

4' 0' 4'

COMMONWEALTH OF PENNSYLVANIA
DEPARTMENT OF TRANSPORTATION

ARMSTRONG COUNTY
SR 1038 SECTION 150
SEG 0040 OFFSET 1110
SR 1038-150 STA 1956+35.83 AND SR 4025 OVER BUFFALO AND PITTSBURGH RAILROAD
4 SPAN STEEL MULTI-GIRDER BRIDGE AND SINGLE SPAN ROLLED BEAM T-SPAN
DECK PLAN 1

DESIGNED BY	RES
DRAWN BY	GCC
CHECKED BY	PAM

RECOMMENDED

SHEET 66 OF 97

S-27038

A-00122496

1/5/2007

MIN. LONGITUDINAL REINF. SPLICE LENGTHS		
BAR SIZE	DECK SLAB	BARRIER & SIDEWALK
#4	2'-1"	2'-1"
#5	2'-7"	2'-7"
#6	3'-1"	3'-1"

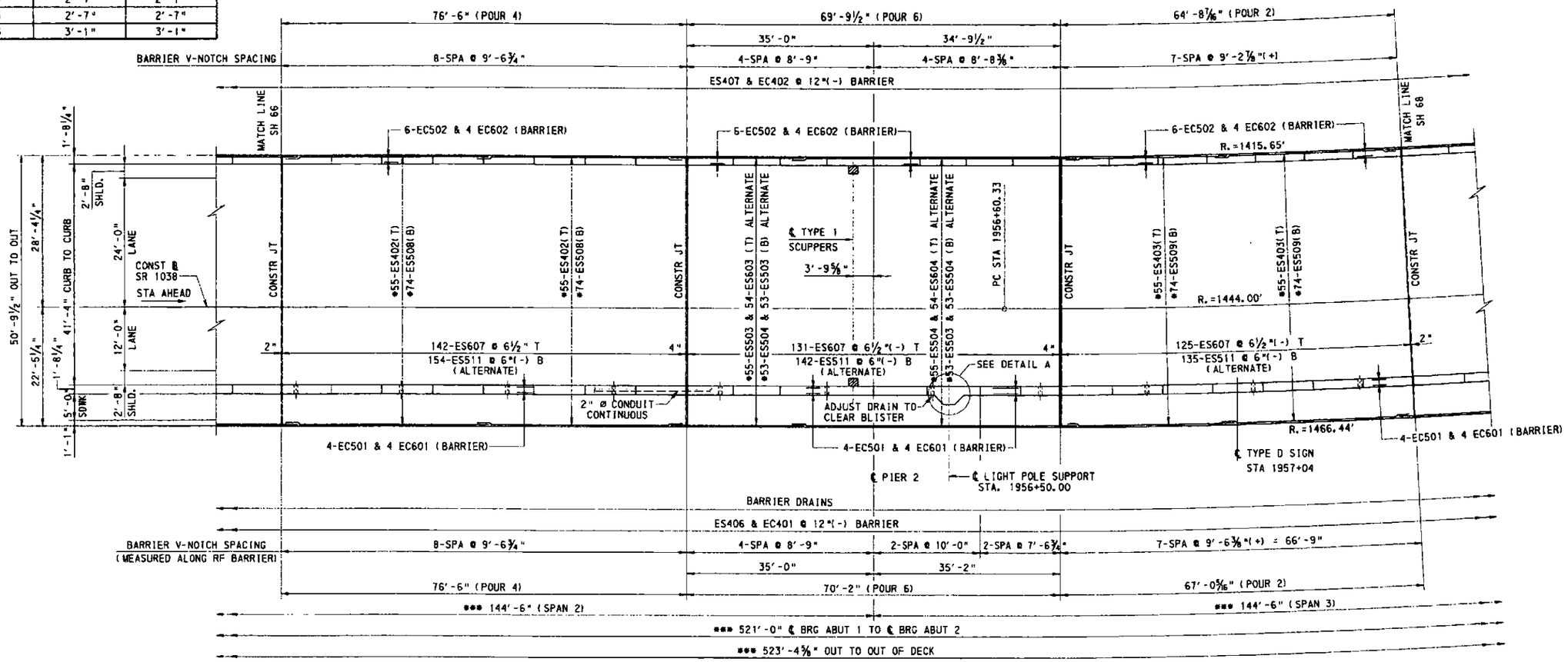

DECK PLAN 2

(ALL DIMENSIONS ARE HORIZONTAL DIMENSIONS)

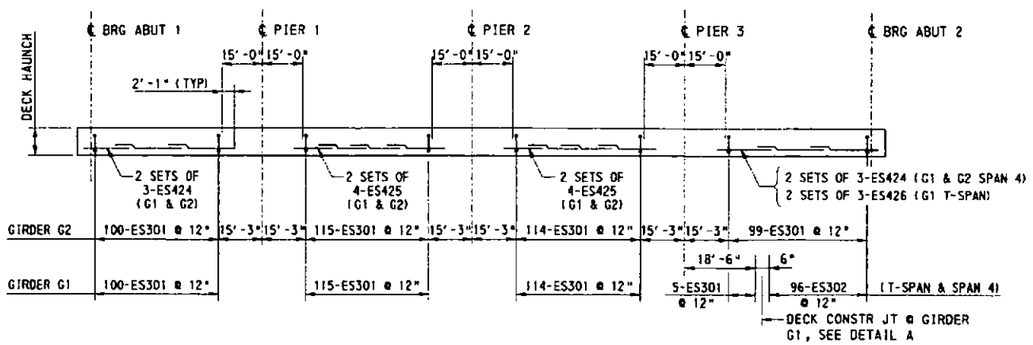

HAUNCH REINFORCEMENT FOR GIRDERS G1 & G2

NTS

NOTES:

- FOR GENERAL NOTES SHEET 5 AND 6.
- FOR DECK PLAN 1, ADDITIONAL NOTES AND LEGEND SEE SHEET 66.
- FOR DECK PLAN 3 SEE SHEET 68.
- FOR DECK PLAN 4 SEE SHEET 69.
- SPACE TRANSVERSE DECK REINFORCEMENT RADIALLY ALONG OUTSIDE EDGE OF RIGHT FASCIA IN CURVED PORTION OF DECK.
- FOR ADDITIONAL HAUNCH REINFORCEMENT DETAILS AND DETAIL A SEE DECK PLAN 1 SHEET 66.
- SEE SIGNING PLAN FOR SIGN DETAILS.

Mark	Description	By	Chk'd.	Recm'd.	Date
REVISIONS					

4' 0' 4'

KEITH A. MICHAEL — PROFESSIONAL ENGINEER — PENNSYLVANIA

COMMONWEALTH OF PENNSYLVANIA
DEPARTMENT OF TRANSPORTATION

ARMSTRONG COUNTY
SR 1038 SECTION 150
SEG 0040 OFFSET 1110
SR 1038-150 STA 1956+35.83 AND SR 4025 OVER BUFFALO AND PITTSBURGH RAILROAD
4 SPAN STEEL MULTI-GIRDER BRIDGE AND SINGLE SPAN ROLLED BEAM T-SPAN
DECK PLAN 2

RECOMMENDED _____

SHEET 67 OF 97

S-27038

A-00122496

DESIGNED BY	RES
DRAWN BY	GCC
CHECKED BY	PAM

h:\projects\043288\roots\043288_01\drawings\plan\deck2.dgn 7/1/2001

MIN. LONGITUDINAL REINF. SPLICE LENGTHS		
BAR SIZE	DECK SLAB	BARRIER & SIDEWALK
#4	2'-1"	2'-1"
#5	2'-7"	2'-7"
#6	3'-1"	3'-1"

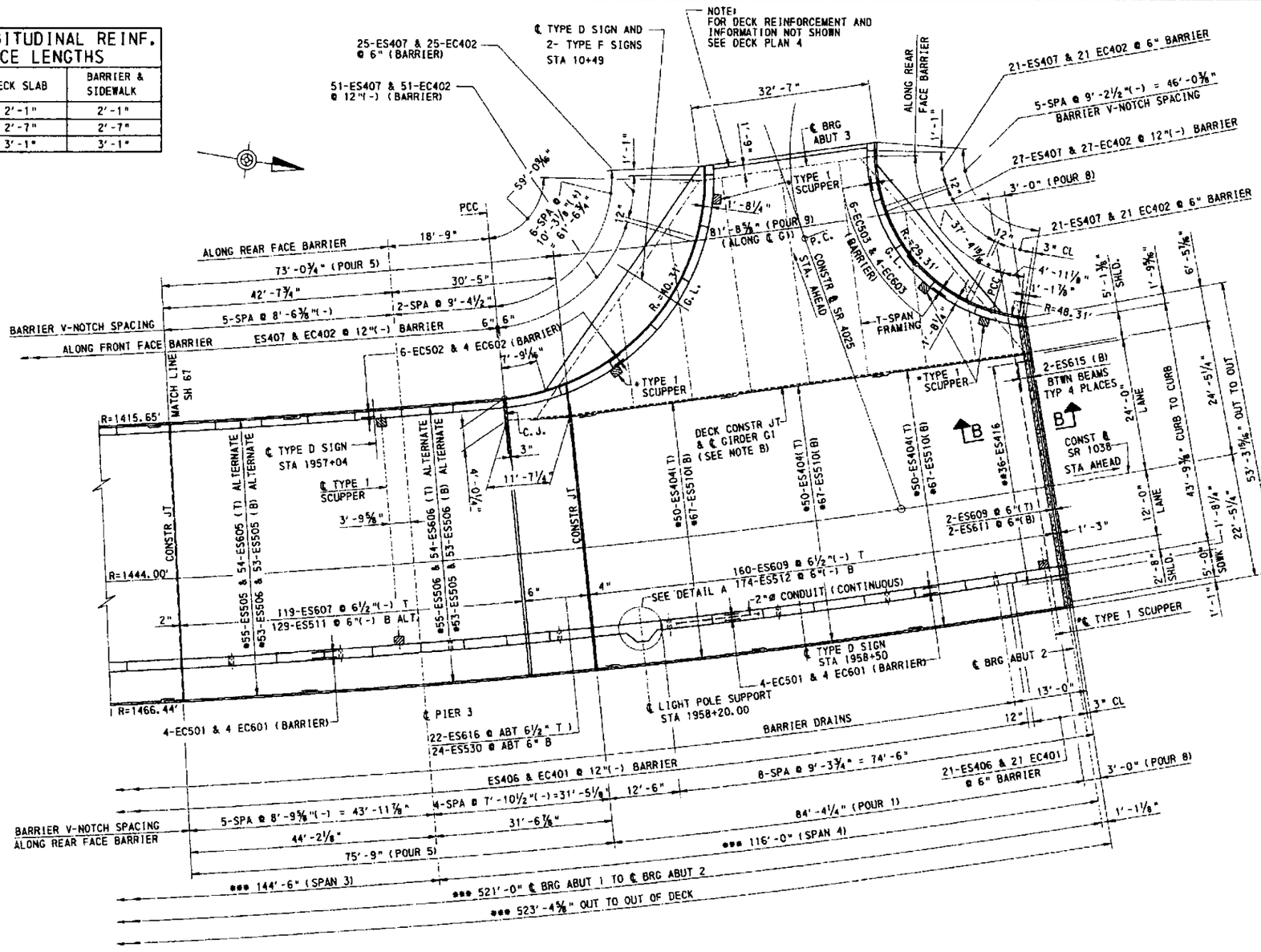

DECK PLAN 3

(ALL DIMENSIONS ARE HORIZONTAL DIMENSIONS)

LEGEND:

- C.J. CONSTRUCTION JOINT
- G.L. GUTTER LINE
- • SEE SHEET 80 FOR LOCATION OF SCUPPER

NOTE B

SAW CUT CONSTRUCTION JOINT ½" WIDE x ¾" DEEP AND SEAL WITH MATERIAL IN ACCORDANCE WITH BULLETIN 15, SECTION 1001.2 (1).

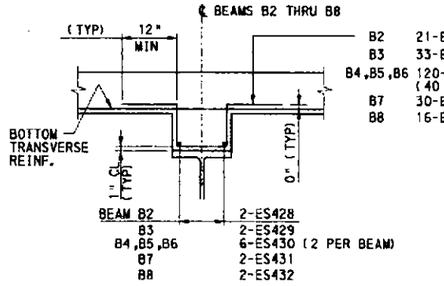

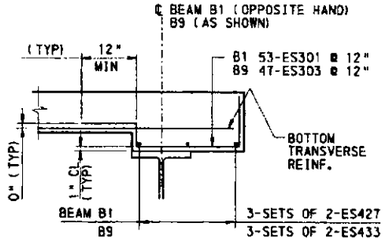

TYP HAUNCH REINFORCEMENT DETAILS T-SPAN

NOTES:

- FOR GENERAL NOTES SEE SHEETS 5 AND 6.
- FOR DECK PLAN 1, ADDITIONAL NOTES AND LEGEND SEE SHEET 66.
- FOR DECK PLAN 2 SEE SHEET 67.
- FOR DECK PLAN 4 SEE SHEET 69.
- FOR SECTION B-B, SEE SHEET 71.
- SPACE TRANSVERSE DECK REINFORCEMENT RADIALLY ALONG OUTSIDE EDGE OF RIGHT FASCIA IN CURVED PORTION OF DECK.
- FOR DETAILS AND POST SPACING FOR PA HT BARRIER SEE STD DWG BC-707M.
- FOR DETAILS AND POST SPACING FOR PEDESTRIAN RAILING SEE STD DWG BC-716M.
- FOR CONDUIT DETAILS SEE STD DWG BC-721M.
- FOR BARRIER FLOOR DRAIN DETAILS SEE STD DWG BC-751M.
- FOR BARRIER V-NOTCH DETAILS SEE STD DWG BC-752M.
- FOR NEOPRENE STRIP SEAL DAM SEE STD DWG BC-767M.
- FOR TABLE OF SLAB HAUNCH THICKNESS T-SPAN SEE DECK PLAN 4 SHEET 69.

Mark	Description	By	Chk'd.	Recm'd.	Date
REVISIONS					

4' 0' 4'

DESIGNED BY	RES
DRAWN BY	GCC
CHECKED BY	PAM

COMMONWEALTH OF PENNSYLVANIA
DEPARTMENT OF TRANSPORTATION

ARMSTRONG COUNTY
SR 1038 SECTION 150
SEG 0040 OFFSET 1110
SR 1038-150 STA 1956+35.83 AND SR 4025 OVER BUFFALO AND PITTSBURGH RAILROAD
4 SPAN STEEL MULTI-GIRDER BRIDGE AND SINGLE SPAN ROLLED BEAM T-SPAN
DECK PLAN 3

RECOMMENDED JUL 8 2002

SHEET 68 OF 97

S-27038

A-00122496

7/5/2002

SLAB HAUNCH THK "A" (T-SPAN)				
BEAM NO.	(1) GIRDER G1	(2) ABUT 3	(3) BEAM B1	(4) BEAM B9
B1	14½"	13"	-	-
B2	14½"	-	13¾"	-
B3	14½"	-	13¾"	-
B4	14½"	13½"	-	-
B5	14½"	15"	-	-
B6	14½"	15⅝"	-	-
B7	14½"	-	-	19¼"
B8	14½"	-	-	17½"
B9	14½"	20½"	-	-

(1) MEASURED FROM TOP/SLAB TO TOP/WEB AT ℄ GIRDER G1
(2) MEASURED FROM TOP/SLAB TO TOP/FLANGE AT ℄ BRG ABUTMENT 3
(3) MEASURED FROM TOP/SLAB TO TOP/FLANGE AT INTERSECTION OF BEAMS B2/B1 & B3/B1
(4) MEASURED FROM TOP/SLAB TO TOP/FLANGE AT INTERSECTION OF BEAMS B7/B9 & B8/B9

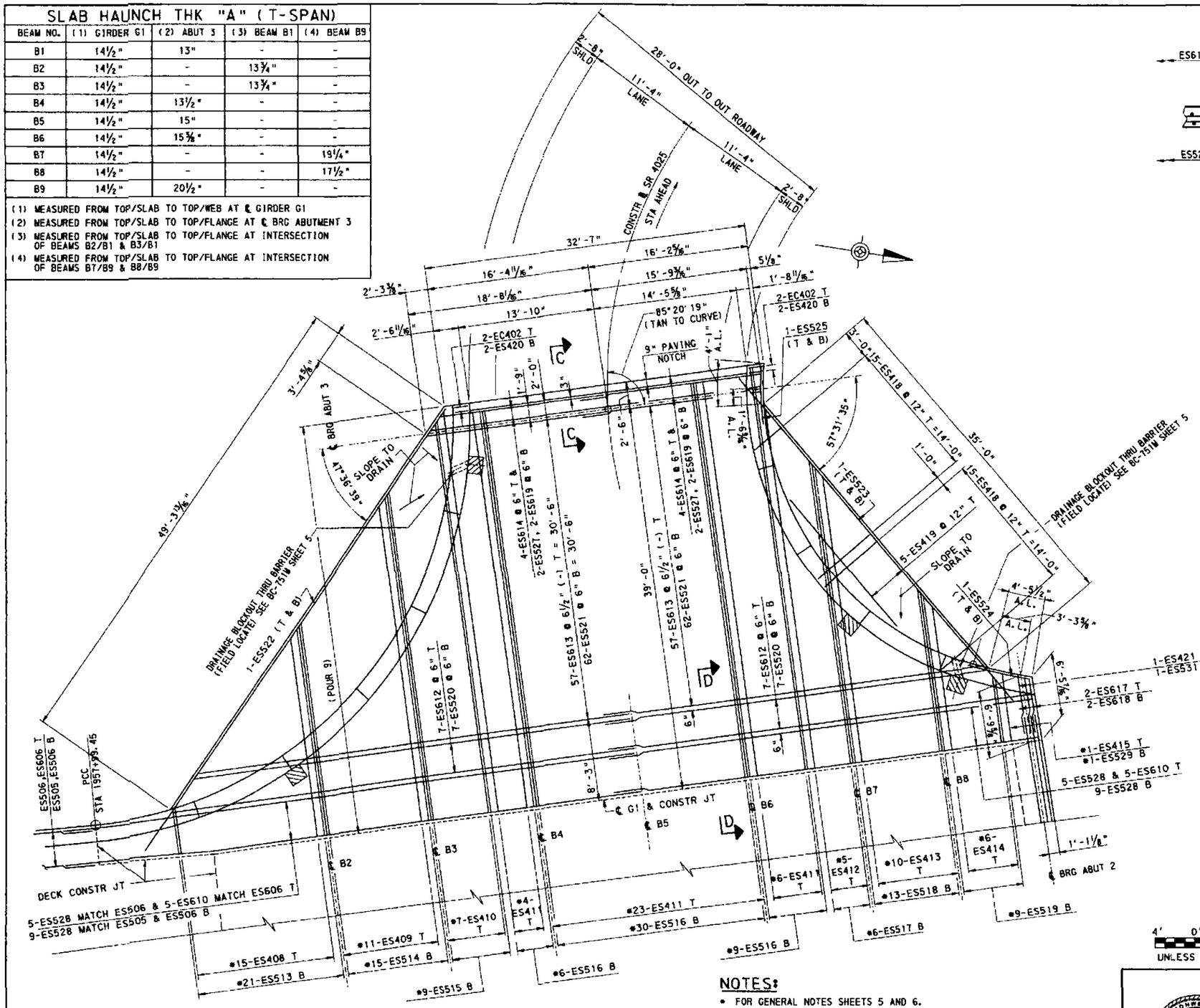

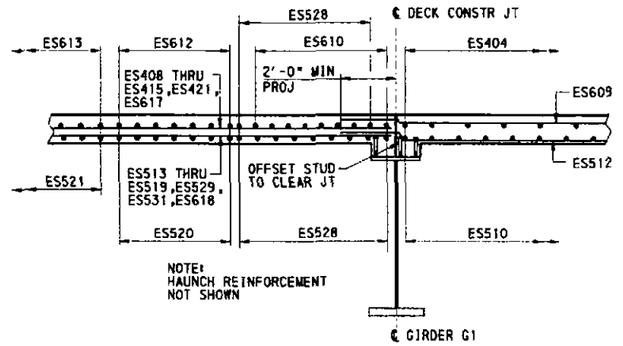

SECTION D-D
(SHOWN HORIZONTAL)
2' 1' 0' 2'

MIN. LONGITUDINAL REINF. SPLICE LENGTHS		
BAR SIZE	DECK SLAB	BARRIER & SIDEWALK
#4	2'-1"	2'-1"
#5	2'-7"	2'-7"
#6	3'-1"	3'-1"

Mark	Description	By	Chk'd.	Recm'd.	Date
REVISIONS					

DECK PLAN 4
(ALL DIMENSIONS ARE HORIZONTAL DIMENSIONS)

NOTE:
FOR INFORMATION NOT SHOWN REFER TO DECK PLAN 3

4' 0' 4'
UNLESS NOTED

NOTES:
- FOR GENERAL NOTES SHEETS 5 AND 6.
- FOR DECK PLAN 1, ADDITIONAL NOTES AND LEGEND SEE SHEET 66.
- FOR DECK PLAN 2 SEE SHEET 67.
- FOR DECK PLAN 3 SEE SHEET 68.
- FOR BARRIER DRAINAGE BLOCKOUT SEE STANDARD DWG BC-751M.
- FOR SECTION C-C SEE SHEET 63.
- FOR HAUNCH REINFORCEMENT DETAIL T-SPAN SEE DECK PLAN 3 SHEET

DESIGNED BY	RES
DRAWN BY	GCC
CHECKED BY	PAM

COMMONWEALTH OF PENNSYLVANIA
DEPARTMENT OF TRANSPORTATION

ARMSTRONG COUNTY
SR 1038 SECTION 150
SEG 0040 OFFSET 1110
SR 1038-150 STA 1956+35.83 AND SR 4025 OVER BUFFALO AND PITTSBURGH RAILROAD
4 SPAN STEEL MULTI-GIRDER BRIDGE AND SINGLE SPAN ROLLED BEAM T-SPAN
DECK PLAN 4

KEITH A. MICHAEL
PROFESSIONAL ENGINEER

RECOMMENDED JUL 8 2007

SHEET 69 OF 97
S-27038

A-00122496

N:\projects\0432\estr\future\ea4_k11\forming\final\deck4.dgn 7/3/2007

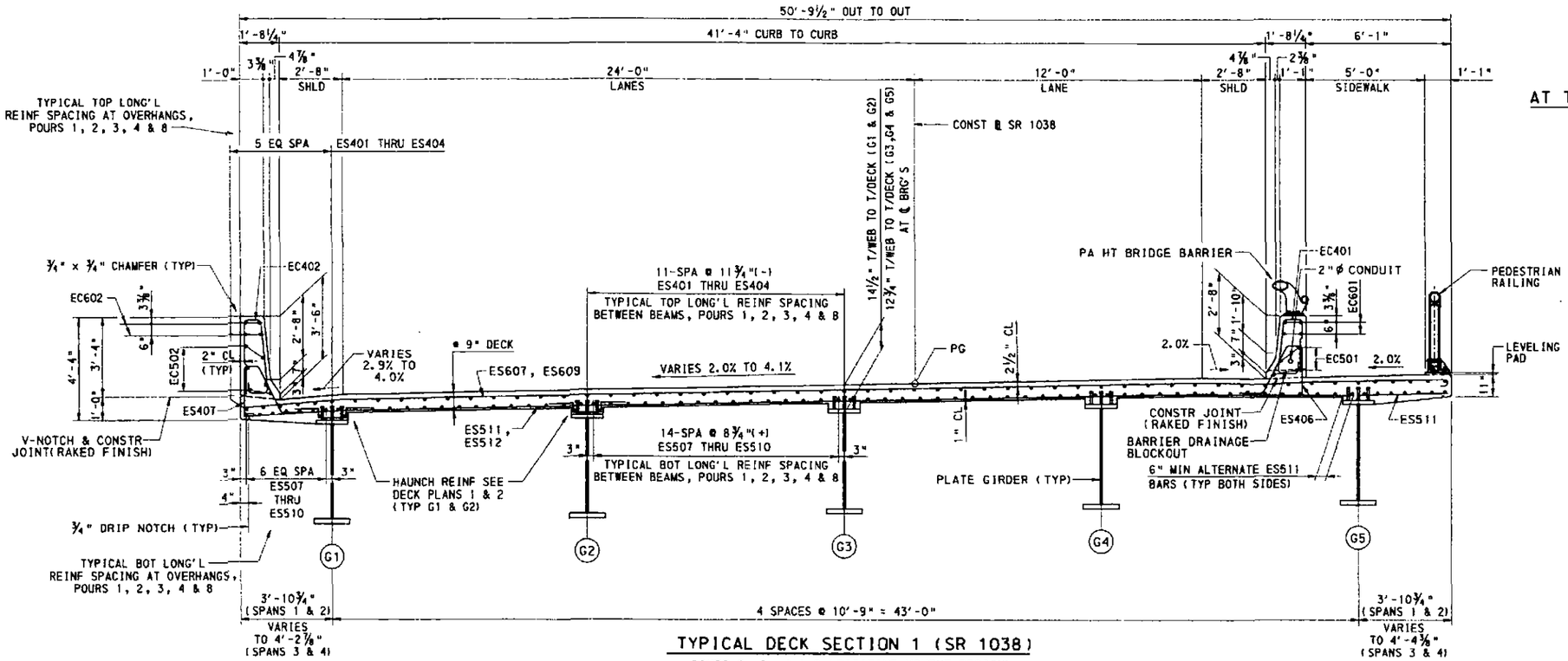

TYPICAL DECK SECTION 1 (SR 1038)

POURS 2, 3, 4 & 8 (POSITIVE MOMENT REGION)
POUR 1 SIMILAR (SEE DECK SECTION D-D FOR DIFFERENCES)

3' 2' 1' 0' 3'

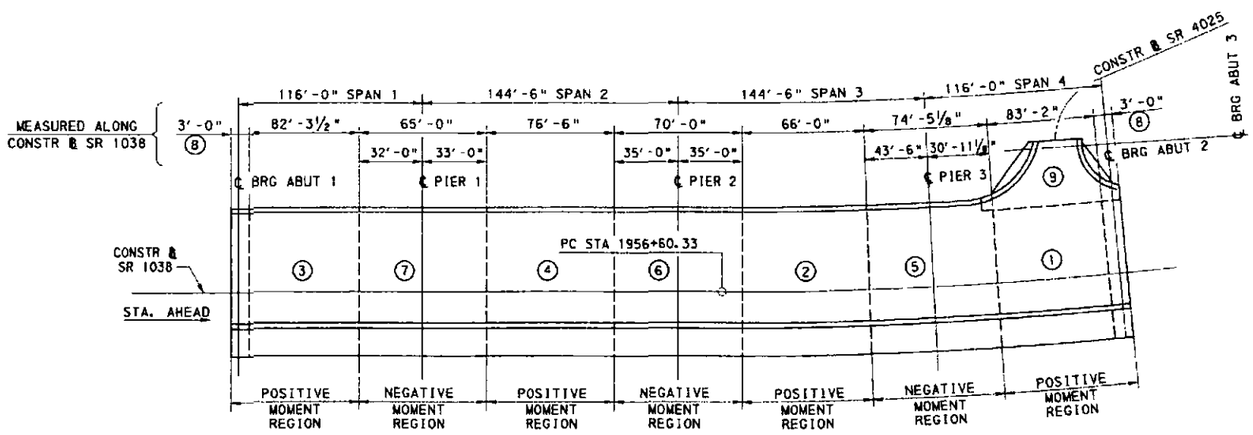

DECK POURING SEQUENCE

NTS

LEGEND

① DECK PLACEMENT NUMBER

DECK PLACEMENT SEQUENCE

- A MINIMUM WAITING PERIOD OF 2 CURING DAYS IS REQUIRED BETWEEN POURS 1 & 2, 3 & 4 AND 2 & 4, POURS 5,6 AND 7 MAY BE DONE IN ANY ORDER
- CAST BARRIERS IN POSITIVE MOMENT REGION, THEN NEGATIVE MONENT REGION UNLESS CONTINUOUS CASTING CAN BE MAINTAINED
- THE CONTRACTOR MAY USE AN ALTERNATIVE DECK PLACEMENT SEQUENCE IF THE PROVISIONS IN THE DM-4, SECTION 2 (02.5.3) ARE MET

DESIGNED BY	RES
DRAWN BY	GCC
CHECKED BY	PAM

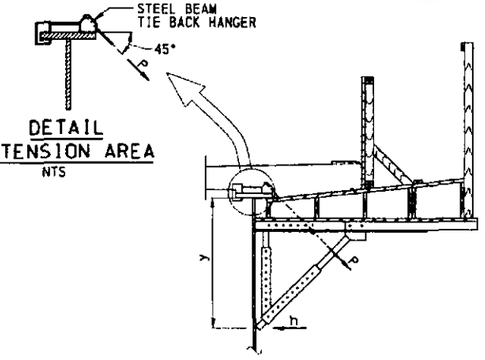

DETAIL AT TENSION AREA

NTS

TYPICAL OVERHANG FORMING DETAIL

NTS

NOMINAL DEPTH y INCHES	MAXIMUM PERMISSABLE HORIZONTAL LOAD h KIP/FT
36	1.250
56	0.750

MAXIMUM PERMISSIBLE JACK SPACING 4 FEET

THE FASCIA GIRDERS ARE DESIGNED FOR A TEMPORARY CONSTRUCTION LOAD APPLIED TO THE WEB AT A MAXIMUM 4 FEET INTERVAL. THIS LOAD (SEE TABLE) APPROXIMATES THE HORIZONTAL COMPONENT OF A DECK OVERHANG FORM SUPPORT BRACKET AND CONSISTS OF AN ALLOWANCE FOR THE WEIGHT OF THE CONCRETE, FORMS AND INCIDENTAL LOADS, PLUS THE DECK FINISHING MACHINE. WHERE A TRANSVERSE STIFFENER SPACING, LESS THAN THAT REQUIRED FOR THE FINAL DESIGN SHEAR, IS INDICATED FOR CONSTRUCTABILITY, THE SPACING FOR THE FINAL DESIGN SHEAR MAY BE USED IF THE OVERHANG FORMS ARE SUPPORTED FROM THE BOTTOM FLANGE OF THE FASCIA GIRDER, OR IF THE GIRDER WEB IS ADEQUATELY BRACED TO PREVENT BUCKLING DUE TO LOADS FROM WEB-BEARING FORM SUPPORT BRACKETS. THE CONTRACTOR HAS THE OPTION TO MODIFY THE OVERHANG BRACKET FROM THAT DESCRIBED HEREIN PROVIDED WORKING DRAWINGS INCLUDING CALCULATIONS, SEALED BY A PROFESSIONAL ENGINEER LICENSED IN THE COMMONWEALTH OF PENNSYLVANIA, ARE SUBMITTED FOR REVIEW AND ACCEPTANCE AND SHOW THE MODIFICATIONS DO NOT CAUSE UNACCEPTABLE DEFORMATIONS OR STRESSES IN THE BRIDGE AND IT IS UNDERSTOOD THE CONTRACTOR IS ULTIMATELY RESPONSIBLE FOR THE SATISFACTORY COMPLETION OF THE BRIDGE.

NOTES:

- FOR GENERAL NOTES SEE SHEETS 5 AND 6.
- FOR FRAMING PLAN SEE SHEETS 39 AND 40.
- FOR GIRDER DETAILS SEE SHEETS 41 AND 42.
- FOR DECK PLAN SEE SHEET 66, 67, AND 68.
- FOR REINFORCEMENT BAR SCHEDULE SEE SHEET 87.
- FOR PROTECTIVE FENCE DETAILS SEE STANDARD DRAWING BC-701M
- FOR DETAILS AND POST SPACING FOR PA HT BRIDGE BARRIER SEE STANDARD DRAWING BC-707M
- FOR ALUMINUM PEDESTRAIN RAILING SEE STANDARD DRAWING BC-716M
- FOR CONDUIT DETAILS SEE STANDARD DRAWING BC-721M
- FOR BARRIER V-NOTCH DETAIL SEE STANDARD DRAWING BC-752M
- FOR DRIP NOTCH DETAIL SEE STANDARD DRAWING BC-775M

LEGEND

* INCLUDES ½" INTEGRAL WEARING SURFACE

Mark	Description	By	Chk'd.	Recm'd.	Date
REVISIONS					

KEITH A. MICHAEL

COMMONWEALTH OF PENNSYLVANIA
DEPARTMENT OF TRANSPORTATION

ARMSTRONG COUNTY
SR 1038 SECTION 150
SEG 0040 OFFSET 1110
SR 1038-150 STA 1956+35.83 AND SR 4025 OVER BUFFALO AND PITTSBURGH RAILROAD
4 SPAN STEEL MULTI-GIRDER BRIDGE AND SINGLE SPAN ROLLED BEAM T-SPAN
TYPICAL DECK SECTION 1

RECOMMENDED JUL 8 2019

SHEET 10 OF 97

S-27038

A-00122496

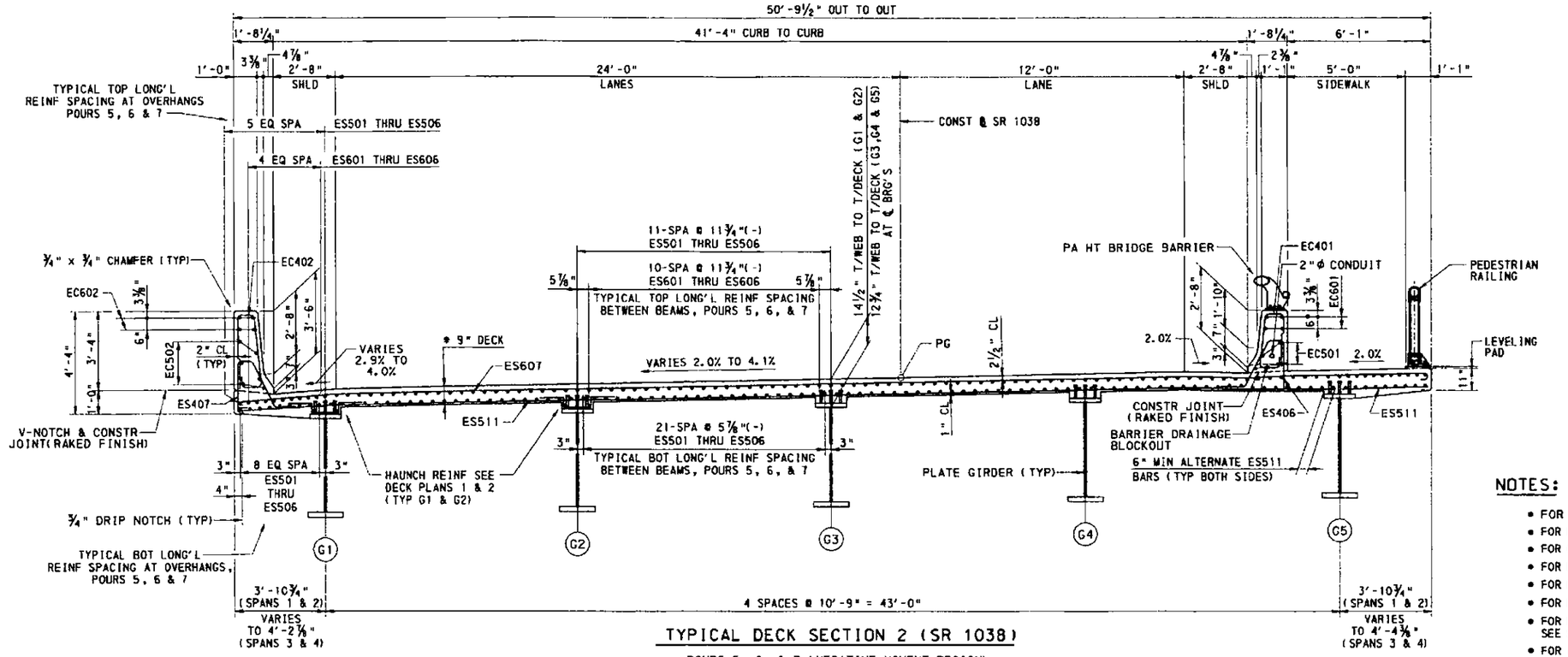

TYPICAL DECK SECTION 2 (SR 1038)

POURS 5, 6, & 7 (NEGATIVE MOMENT REGION)

3' 2' 1' 0' 3'

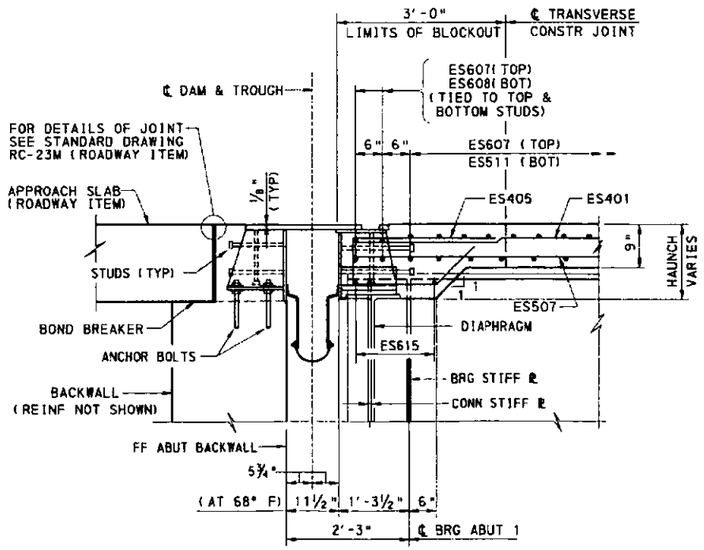

SECTION A-A

2' 1' 0' 2'

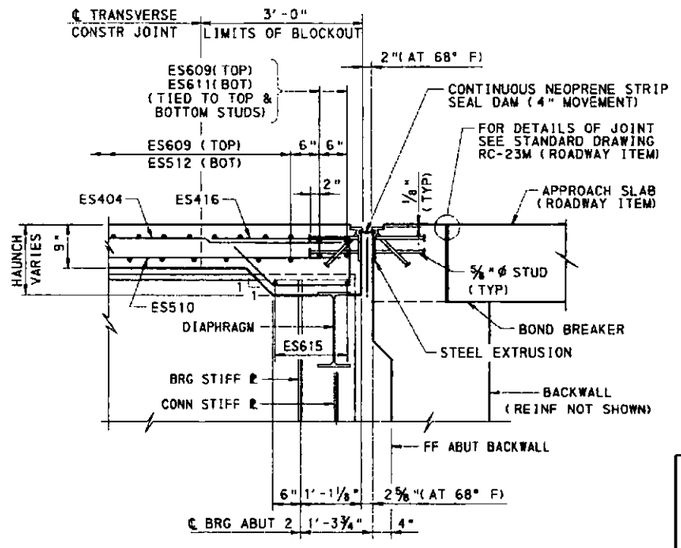

SECTION B-B

2' 1' 0' 2'

NOTES:

- FOR GENERAL NOTES SEE SHEETS 5 AND 6.
- FOR FRAMING PLAN SEE SHEETS 39 AND 40.
- FOR GIRDER DETAILS SEE SHEETS 41 AND 42.
- FOR DECK PLAN SEE SHEET 66, 67, AND 68.
- FOR REINFORCEMENT BAR SCHEDULE SEE SHEET 87.
- FOR PROTECTIVE FENCE DETAILS SEE STANDARD DRAWING BC-701M
- FOR DETAILS AND POST SPACING FOR PA HT BRIDGE BARRIER SEE STANDARD DRAWING BC-707M
- FOR ALUMINUM PEDESTRAIN RAILING SEE STANDARD DRAWING BC-716M
- FOR CONDUIT DETAILS SEE STANDARD DRAWING BC-721M
- FOR BARRIER V-NOTCH DETAIL SEE STANDARD DRAWING BC-752M
- FOR DRIP NOTCH DETAIL SEE STANDARD DRAWING BC-775M

LEGEND

- INCLUDES ½" INTEGRAL WEARING SURFACE

Mark	Description	By	Chk'd.	Recm'd.	Date
REVISIONS					

DESIGNED BY	RES
DRAWN BY	CCC
CHECKED BY	PAW

KEITH A. MICHAEL — ENGINEER — PENNSYLVANIA

COMMONWEALTH OF PENNSYLVANIA
DEPARTMENT OF TRANSPORTATION

ARMSTRONG COUNTY
SR 1038 SECTION 150
SEG 0040 OFFSET 1110
SR 1038-150 STA 1956+35.83 AND SR 4025 OVER BUFFALO AND PITTSBURGH RAILROAD
4 SPAN STEEL MULTI-GIRDER BRIDGE AND SINGLE SPAN ROLLED BEAM T-SPAN
TYPICAL DECK SECTION 2

RECOMMENDED _____

SHEET 71 OF 97

S-27038

A-00122496

7/31/2007

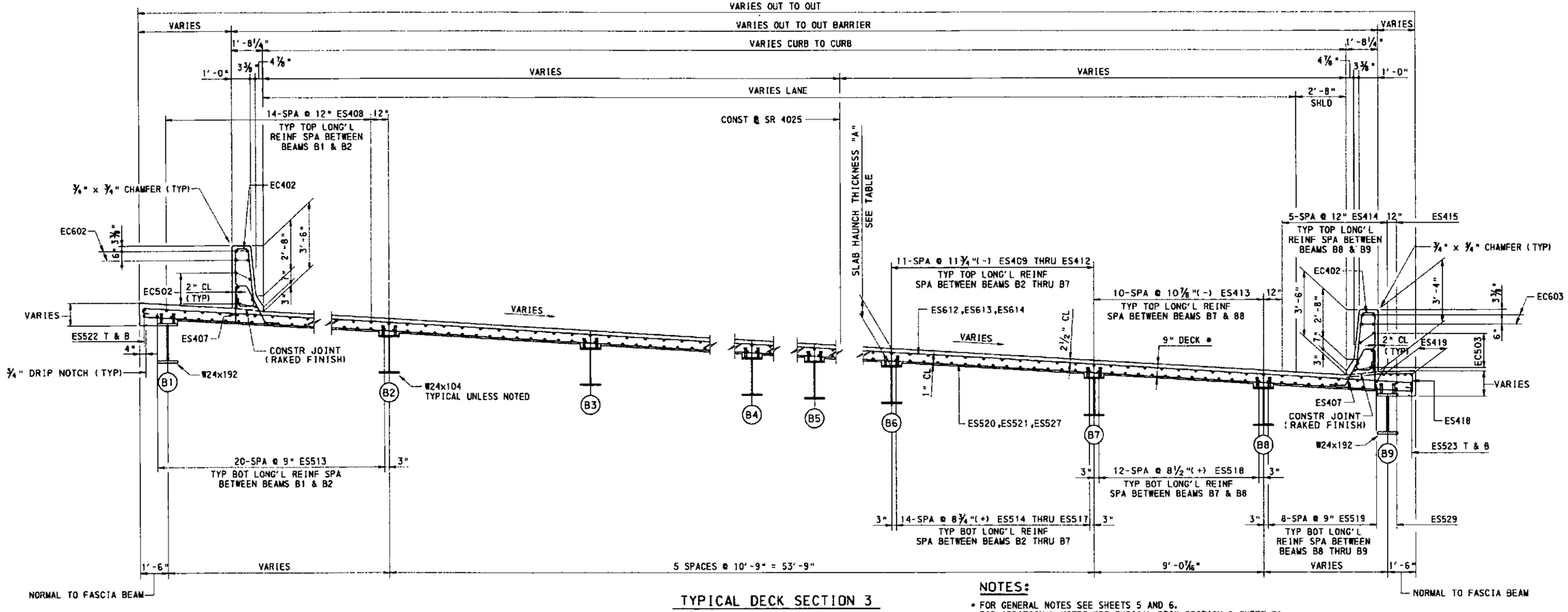

TYPICAL DECK SECTION 3

NOTES:

- FOR GENERAL NOTES SEE SHEETS 5 AND 6.
- FOR ADDITIONAL NOTES SEE TYPICAL DECK SECTION 2 SHEET 71.
- FOR SLAB HAUNCH THICKNESS TABLE SEE DECK PLAN 4 SHEET 69.
- FOR HAUNCH REINFORCEMENT DETAIL T-SPAN SEE DECK PLAN 3 SHEET 68.

LEGEND:

* INCLUDES ½" INTEGRAL WEARING SURFACE

Mark	Description	By	Chk'd.	Recm'd.	Date
REVISIONS					

3' 2' 1' 0' 3'

DESIGNED BY	BGC
DRAWN BY	GCC
CHECKED BY	PAM

COMMONWEALTH OF PENNSYLVANIA
DEPARTMENT OF TRANSPORTATION

ARMSTRONG COUNTY
SR 1038 SECTION 150
SEG 0040 OFFSET 1110
SR 1038-150 STA 1956+35.83 AND SR 4025 OVER
BUFFALO AND PITTSBURGH RAILROAD
4 SPAN STEEL MULTI-GIRDER BRIDGE AND
SINGLE SPAN ROLLED BEAM T-SPAN
TYPICAL DECK SECTION 3

RECOMMENDED _____ 6 2007

SHEET 72 OF 97

S-27038

A-00122496

h:\projects\40432\ecf\ust_pe##_kittanning#_final#93.dgn 7/3/2007

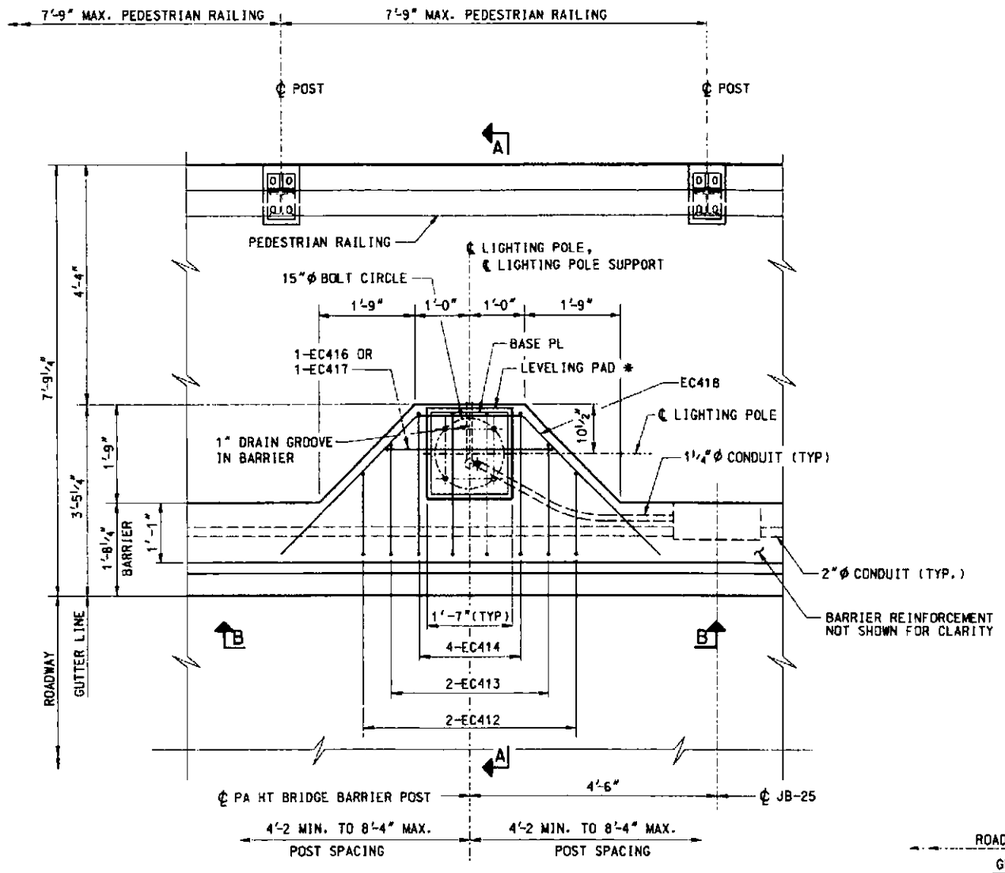

PLAN AT SIDEWALK SHOWN
PLAN WITHOUT SIDEWALK SIMILAR

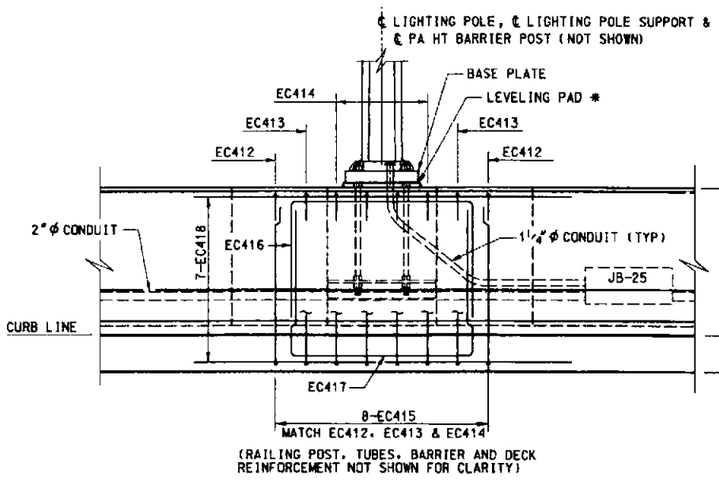

ELEVATION B-B

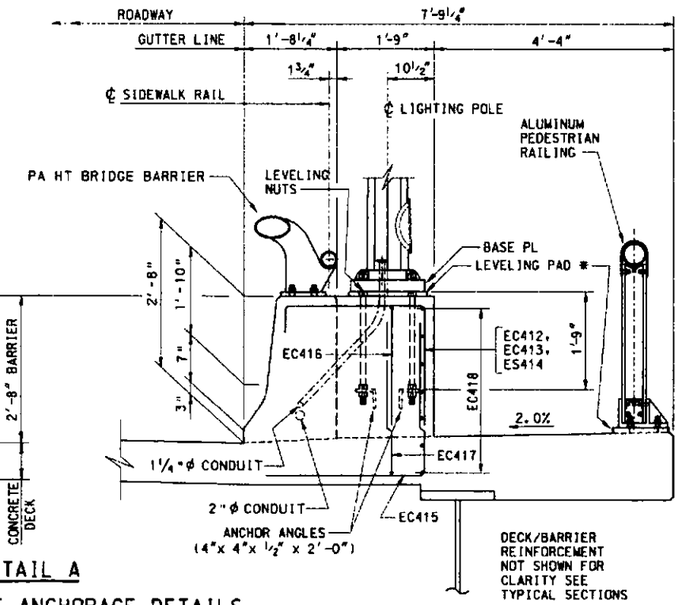

DETAIL A

SECTION A-A

LIGHTING POLE ANCHORAGE DETAILS

2' 1' 0' 2'

NOTES:

- FOR GENERAL NOTES SEE SHEETS 5 & 6.
- FOR LOCATION OF DETAIL A LIGHTING POLE ANCHORAGE SEE DECK PLANS SHEETS 66, 67, AND 68.
- FOR REINFORCEMENT BAR SCHEDULE SEE SHEET 87
- FOR PROTECTIVE FENCE DETAILS SEE STANDARD DRAWING BC-701M
- FOR PA HT BRIDGE BARRIER DETAILS SEE STANDARD DRAWING BC-707M
- FOR ALUMINUM PEDESTRIAN RAILING SEE STANDARD DRAWING BC-716M
- FOR CONDUIT DETAILS SEE STANDARD DRAWING BC-721M
- FOR LIGHTING POLE DETAILS SEE STANDARD DRAWING BC-722M

LEGEND:

* FILL SPACE BETWEEN POLE BASE PLATE AND CONCRETE WITH GROUT AFTER SETTING POLE TRULY VERTICAL USING LEVELING NUTS. MINIMUM HEIGHT OF LEVELING PAD IS 1". TOOL EDGES OF LEVELING PAD.

Mark	Description	By	Chk'd.	Recm'd.	Date
REVISIONS					

DESIGNED BY	RES
DRAWN BY	GCC
CHECKED BY	PAM

COMMONWEALTH OF PENNSYLVANIA
DEPARTMENT OF TRANSPORTATION

ARMSTRONG COUNTY
SR 1038 SECTION 150
SEG 0040 OFFSET 1110
SR 1038-150 STA 1956+35.83 AND SR 4025 OVER
BUFFALO AND PITTSBURGH RAILROAD
4 SPAN STEEL MULTI-GIRDER BRIDGE AND
SINGLE SPAN ROLLED BEAM T-SPAN
LIGHT POLE SUPPORT DETAILS

RECOMMENDED

SHEET 73 OF 97

S-27038

A-00122496

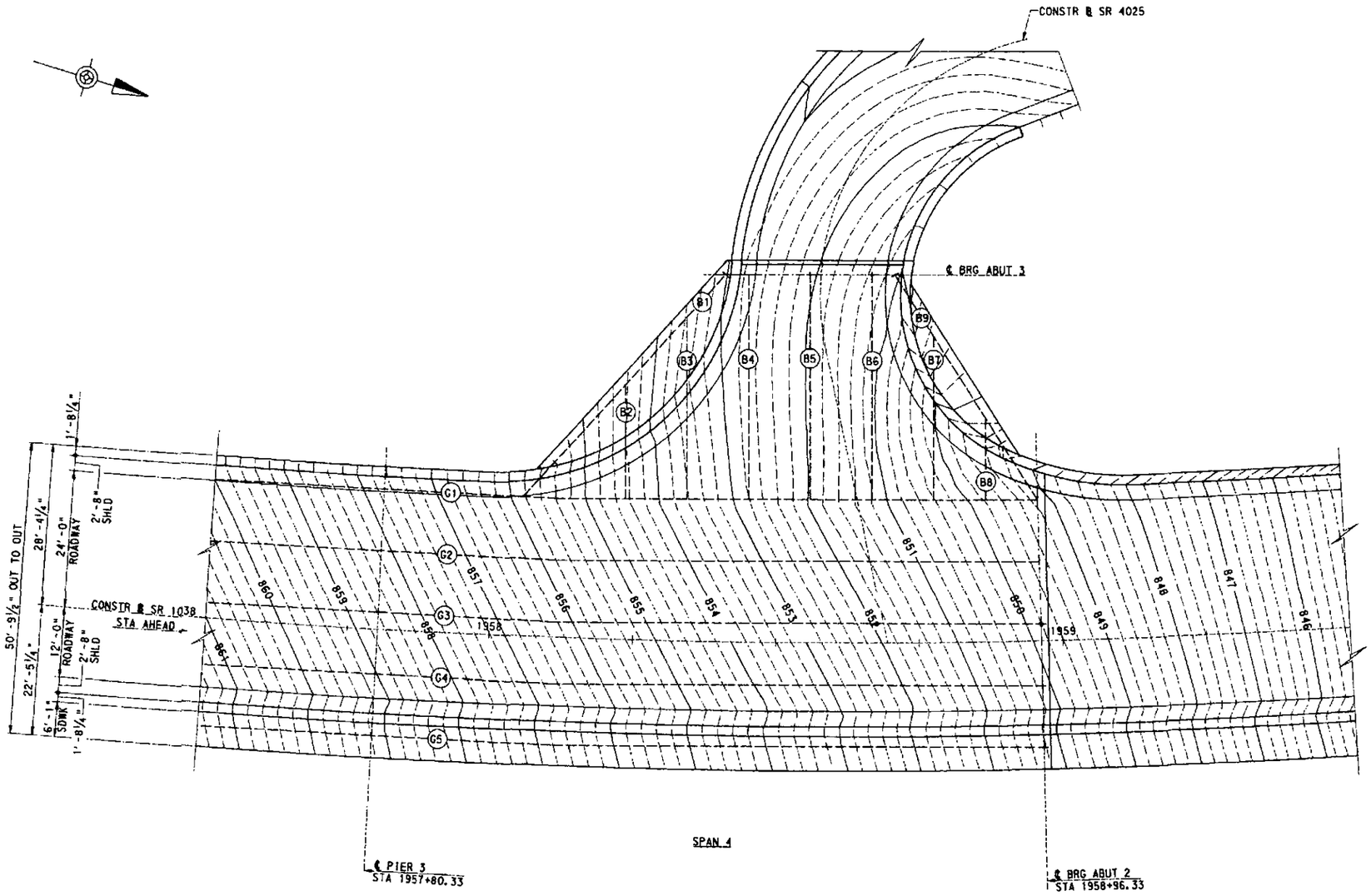

CONTOUR PLAN

4' 0' 4'

NOTES

- FOR FRAMING PLAN SEE SHEETS 39 AND 40.
- FOR DECK PLANS SEE SHEETS 66 THRU 69.
- FOR TABLE OF DECK ELEVATIONS SEE SHEET 75.

LEGEND

(B1)(G1) BEAM NUMBER

—— 1.0 FOOT CONTOUR

– – – 0.2 FOOT CONTOUR

Mark	Description	By	Chk'd.	Recm'd.	Date

REVISIONS

COMMONWEALTH OF PENNSYLVANIA
DEPARTMENT OF TRANSPORTATION

ARMSTRONG COUNTY
SR 1038 SECTION 150
SEG 0040 OFFSET 1110
SR 1038-150 STA 1956+35.83 AND SR 4025 OVER
BUFFALO AND PITTSBURGH RAILROAD
4 SPAN STEEL MULTI-GIRDER BRIDGE AND
SINGLE SPAN ROLLED BEAM T-SPAN
CONTOUR PLAN

RECOMMENDED JUL 6 2007

SHEET 74 OF 97

S-27038

DESIGNED BY	
DRAWN BY	
CHECKED BY	

A-00122496

FINISHED DECK ELEVATIONS AT BREAK POINTS

LOCATION	STATION	(A) LEFT GUTTER	(B) LEFT EDGE OF ROADWAY	(C) P.G.	(D) RIGHT EDGE OF ROADWAY	(E) RIGHT GUTTER	(F) LEFT EDGE OF SIDEWALK	(G) RIGHT EDGE OF DECK
ABUT. 1	1953+75.33	888.80	888.91	889.49	889.79	889.73	889.82	889.94
SPAN 1	1953+80.00	888.48	888.59	889.14	889.42	889.36	889.45	889.57
	1953+90.00	887.79	887.90	888.38	888.62	888.57	888.65	888.77
	1954+00.00	887.03	887.14	887.62	887.86	887.81	887.89	888.01
	1954+10.00	886.27	886.38	886.86	887.10	887.05	887.13	887.25
	1954+20.00	885.51	885.62	886.10	886.34	886.29	886.37	886.49
	1954+30.00	884.75	884.86	885.34	885.58	885.53	885.61	885.73
	1954+40.00	883.99	884.10	884.58	884.82	884.77	884.85	884.97
	1954+50.00	883.23	883.34	883.82	884.06	884.01	884.09	884.21
	1954+60.00	882.47	882.58	883.06	883.30	883.25	883.33	883.45
	1954+70.00	881.71	881.82	882.30	882.54	882.48	882.57	882.68
	1954+80.00	880.95	881.06	881.54	881.78	881.72	881.81	881.93
	1954+90.00	880.19	880.30	880.78	881.02	880.96	881.05	881.17
PIER 1	1954+91.33	880.09	880.20	880.68	880.92	880.86	880.95	881.07
SPAN 2	1955+00.00	879.43	879.54	880.02	880.26	880.20	880.29	880.41
	1955+10.00	878.67	878.78	879.26	879.50	879.44	879.53	879.65
	1955+20.00	877.91	878.02	878.50	878.74	878.68	878.77	878.89
	1955+30.00	877.15	877.26	877.74	877.98	877.92	878.01	878.13
	1955+40.00	876.39	876.50	876.98	877.22	877.16	877.25	877.37
	1955+50.00	875.63	875.74	876.22	876.46	876.40	876.49	876.61
	1955+60.00	874.87	874.98	875.46	875.70	875.64	875.73	875.85
	1955+70.00	874.11	874.22	874.70	874.94	874.88	874.97	875.09
	1955+80.00	873.35	873.46	873.94	874.18	874.12	874.21	874.33
	1955+90.00	872.59	872.70	873.18	873.42	873.36	873.45	873.57
	1956+00.00	871.79	871.90	872.42	872.68	872.62	872.71	872.83
	1956+10.00	870.95	871.06	871.66	871.95	871.90	871.98	872.11
	1956+20.00	870.12	870.22	870.90	871.23	871.18	871.26	871.38
	1956+30.00	869.28	869.39	870.14	870.51	870.46	870.54	870.66
PIER 2	1956+35.83	868.79	868.90	869.69	870.09	870.04	870.12	870.24
SPAN 3	1956+40.00	868.44	868.55	869.38	869.79	869.74	869.82	869.94
	1956+50.00	867.61	867.71	868.62	869.07	869.02	869.10	869.22
	1956+60.00	866.77	866.87	867.86	868.35	868.29	868.38	868.50
	1956+70.00	866.00	866.11	867.10	867.59	867.53	867.62	867.74
	1956+80.00	865.24	865.35	866.34	866.83	866.77	866.86	866.98
	1956+90.00	864.48	864.59	865.58	866.07	866.01	866.10	866.22
	1957+00.00	863.72	863.83	864.82	865.31	865.25	865.34	865.46
	1957+10.00	862.96	863.07	864.06	864.55	864.49	864.58	864.70
	1957+20.00	862.20	862.31	863.30	863.79	863.73	863.82	863.94
	1957+30.00	861.44	861.55	862.54	863.03	862.97	863.06	863.18
	1957+40.00	860.68	860.79	861.78	862.27	862.21	862.30	862.42
	1957+50.00	859.92	860.03	861.02	861.51	861.45	861.54	861.66
	1957+60.00	859.16	859.27	860.26	860.75	860.69	860.78	860.90
	1957+70.00	858.40	858.51	859.50	859.99	859.93	860.02	860.14
	1957+80.00	857.64	857.75	858.74	859.23	859.17	859.26	859.38
PIER 3	1957+80.33	857.62	857.73	858.71	859.20	859.15	859.23	859.35
SPAN 4	1957+90.00	856.88	856.99	857.98	858.47	858.41	858.50	858.62
	1958+00.00	856.12	856.23	857.21	857.71	857.65	857.74	857.86
	1958+10.00	*	*	856.45	856.95	856.89	856.98	857.10
	1958+20.00	*	*	855.69	856.19	856.13	856.22	856.34
	1958+30.00	*	*	854.93	855.43	855.37	855.46	855.58
	1958+40.00	*	*	854.17	854.67	854.61	854.70	854.82
	1958+50.00	*	*	853.41	853.91	853.85	853.94	854.06
	1958+60.00	*	*	852.65	853.14	853.09	853.17	853.29
	1958+70.00	*	*	851.89	852.34	852.29	852.37	852.50
	1958+80.00	*	*	851.13	851.54	851.49	851.57	851.70
	1958+90.00	*	*	850.37	850.75	850.69	850.78	850.90
ABUT. 2	1958+96.33	*	*	849.89	850.24	850.19	850.27	850.39

* SEE CONTOUR PLAN (TYP)

TABLE OF FINISHED DECK ELEVATIONS OVER CL GIRDERS AT 10' STATIONS

LOCATION	STATION	LOCATION (G1)	(G2)	(G3)	(G4)	(G5)
ABUT. 1	1953+75.33	888.89	889.16	889.42	889.68	889.86
SPAN 1	1953+80.00	888.57	888.82	889.07	889.32	889.49
	1953+90.00	887.88	888.10	888.32	888.53	888.69
	1954+00.00	887.12	887.34	887.56	887.77	887.93
	1954+10.00	886.36	886.58	886.80	887.01	887.17
	1954+20.00	885.60	885.82	886.04	886.25	886.41
	1954+30.00	884.84	885.06	885.28	885.49	885.65
	1954+40.00	884.08	884.30	884.52	884.73	884.89
	1954+50.00	883.32	883.54	883.76	883.97	884.13
	1954+60.00	882.56	882.78	883.00	883.21	883.37
	1954+70.00	881.80	882.02	882.24	882.45	882.61
	1954+80.00	881.04	881.26	881.48	881.69	881.85
	1954+90.00	880.28	880.50	880.72	880.93	881.09
PIER 1	1954+91.33	880.18	880.40	880.62	880.83	880.99
SPAN 2	1955+00.00	879.52	879.74	879.96	880.17	880.33
	1955+10.00	878.76	878.98	879.20	879.41	879.57
	1955+20.00	878.00	878.22	878.44	878.65	878.81
	1955+30.00	877.24	877.46	877.68	877.89	878.05
	1955+40.00	876.48	876.70	876.92	877.13	877.29
	1955+50.00	875.72	875.94	876.16	876.37	876.53
	1955+60.00	874.96	875.18	875.40	875.61	875.77
	1955+70.00	874.20	874.42	874.64	874.85	875.01
	1955+80.00	873.44	873.66	873.88	874.09	874.25
	1955+90.00	872.68	872.90	873.12	873.33	873.49
	1956+00.00	871.88	872.12	872.35	872.59	872.75
	1956+10.00	871.04	871.32	871.58	871.85	872.03
	1956+20.00	870.21	870.51	870.81	871.12	871.31
	1956+30.00	869.37	869.71	870.04	870.38	870.59
PIER 2	1956+35.83	868.88	869.24	869.60	869.95	870.16
SPAN 3	1956+40.00	868.53	868.90	869.27	869.65	869.86
	1956+50.00	867.69	868.10	868.51	868.91	869.14
	1956+60.00	866.86	867.30	867.74	868.18	868.42
	1956+70.00	866.09	866.53	866.97	867.41	867.66
	1956+80.00	865.32	865.77	866.21	866.65	866.90
	1956+90.00	864.56	865.00	865.44	865.88	866.14
	1957+00.00	863.80	864.24	864.68	865.12	865.37
	1957+10.00	863.04	863.48	863.92	864.36	864.61
	1957+20.00	862.28	862.72	863.16	863.60	863.86
	1957+30.00	861.53	861.97	862.41	862.85	863.10
	1957+40.00	860.78	861.22	861.66	862.10	862.34
	1957+50.00	860.03	860.47	860.91	861.35	861.59
	1957+60.00	859.26	859.70	860.14	860.58	860.82
	1957+70.00	858.49	858.93	859.38	859.82	860.06
	1957+80.00	857.73	858.17	858.61	859.05	859.30
PIER 3	1957+80.33	857.71	858.15	858.59	859.03	859.28
SPAN 4	1957+90.00	856.97	857.41	857.86	858.30	858.54
	1958+00.00	856.22	856.66	857.10	857.54	857.78
	1958+10.00	*	855.91	856.35	856.79	857.03
	1958+20.00	*	855.14	855.58	856.02	856.26
	1958+30.00	*	854.37	854.81	855.25	855.50
	1958+40.00	*	853.60	854.04	854.48	854.73
	1958+50.00	*	852.83	853.28	853.72	853.97
	1958+60.00	*	852.08	852.52	852.95	853.21
	1958+70.00	*	851.36	851.77	852.17	852.41
	1958+80.00	*	850.65	851.02	851.39	851.61
	1958+90.00	*	849.94	850.28	850.61	850.82
ABUT. 2	1958+96.33	*	849.50	849.81	850.12	850.31

TABLE OF FINISHED DECK ELEVATIONS AT ℄ BEAM AND ℄ BRG WINGWALL A

	LOCATION	STATION	BEAM B1/B4	BEAM B2/B5	BEAM B3/B6
SPAN 1	℄ BRG C1	1952+16.59	902.25	--	--
	℄ BRG C1	1952+16.62	--	902.30	--
	℄ BRG C1	1952+16.66	--	--	902.37
	℄ BRG C2	1952+49.25	--	--	899.76
	℄ BRG C2	1952+49.29	--	899.68	--
	℄ BRG C2	1952+49.33	899.63	--	--
SPAN 2	℄ BRG C2	1952+51.34	899.47	--	--
	℄ BRG C2	1952+51.38	--	899.52	--
	℄ BRG C2	1952+51.42	--	--	899.59
	℄ BRG C3	1952+84.00	--	--	897.09
	℄ BRG C3	1952+84.04	--	897.01	--
	℄ BRG C3	1952+84.08	896.95	--	--
SPAN 3	℄ BRG C3	1952+86.17	896.80	--	--
	℄ BRG C3	1952+86.20	--	896.84	--
	℄ BRG C3	1952+86.23	--	--	896.92
	℄ BRG C4	1953+18.96	--	--	894.39
	℄ BRG C4	1953+18.98	--	894.31	--
	℄ BRG C4	1953+18.99	894.26	--	--
SPAN 4	℄ BRG C4	1953+21.00	894.10	894.15	894.23
	℄ BRG C5	1953+44.50	892.23	892.28	892.36
SPAN 5	℄ BRG C5	1953+46.50	892.07	892.12	892.20
	℄BRG ABUT 1	1953+70.00	890.20	890.25	890.32

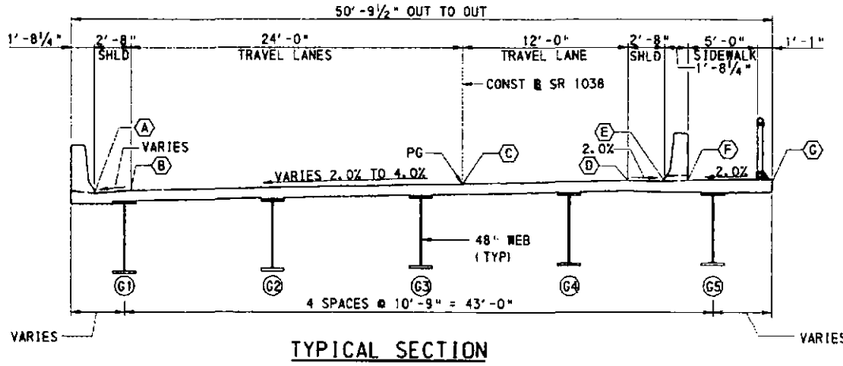

TYPICAL SECTION

NOTE

* FOR LOCATION OF BEAMS SEE FRAMING PLAN SHEETS 32, 39, AND 40.

Mark	Description	By	Chk'd.	Recm'd.	Date
REVISIONS					

DESIGNED BY	RES
DRAWN BY	CB
CHECKED BY	MP

COMMONWEALTH OF PENNSYLVANIA
DEPARTMENT OF TRANSPORTATION

ARMSTRONG COUNTY
SR 1038 SECTION 150
SEG 0040 OFFSET 1110
SR 1038-150 STA 1956+35.83 AND SR 4025 OVER
BUFFALO AND PITTSBURGH RAILROAD
4 SPAN STEEL MULTI-GIRDER BRIDGE AND
SINGLE SPAN ROLLED BEAM T-SPAN
DECK ELEVATIONS

RECOMMENDED _____

SHEET 75 OF 97

S-27038

A-00122496

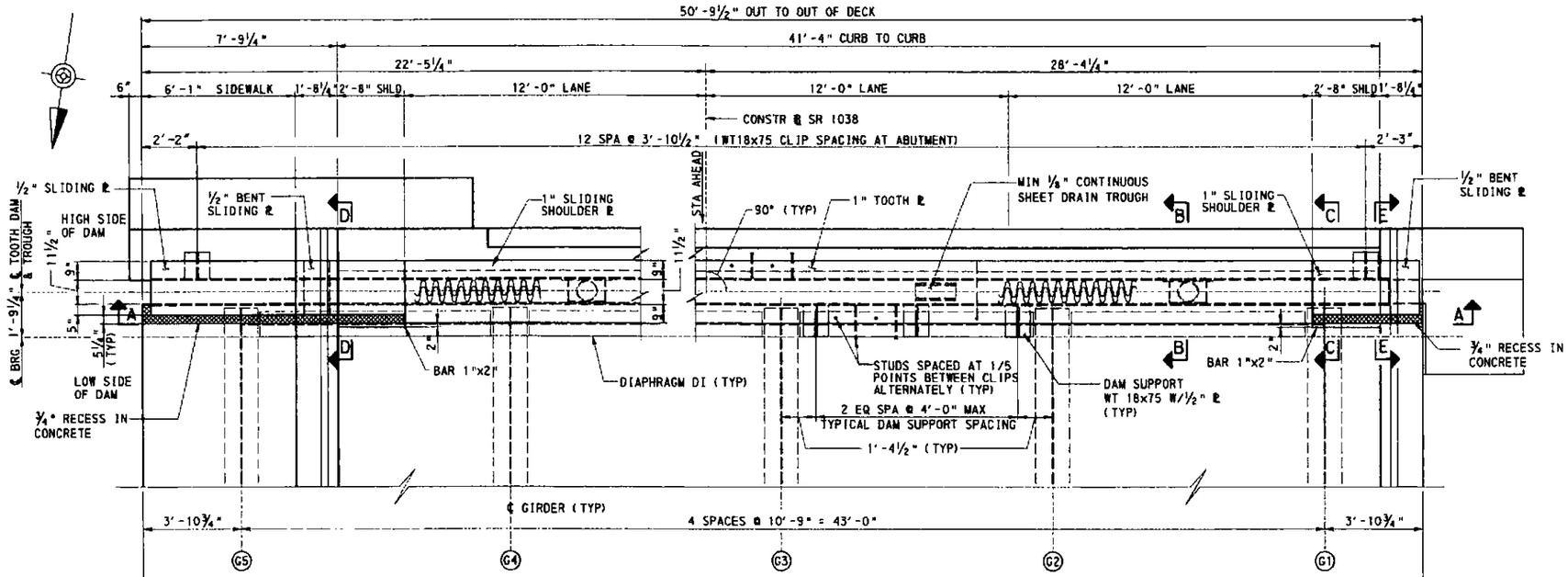

PLAN

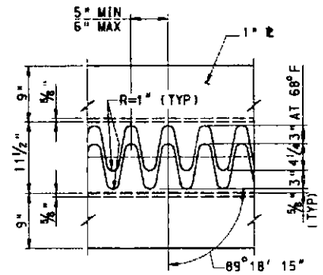

TOOTH PLATE DETAIL
NO SCALE

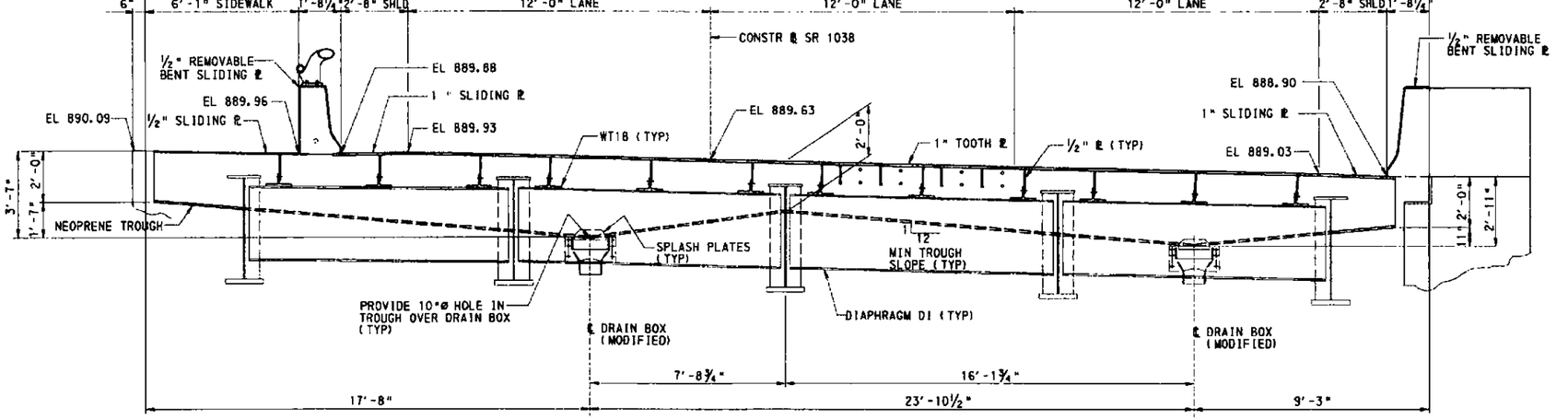

SECTION A-A

3' 2' 1' 0' 3'
UNLESS NOTED

NOTES:

- FOR GENERAL NOTES SEE SHEETS 5 AND 6.
- FOR SECTIONS B-B THRU E-E AND MODIFIED DRAIN BOX DETAILS SEE SHEET 76.
- FOR SPLASH PLATE DETAILS AND ADDITIONAL TOOTH EXPANSION DAM DETAILS NOT SHOWN SEE STANDARD DRAWING BC-762M.
- DIMENSIONS SHOWN ARE AT 68° F
- ELEVATIONS SHOWN ARE ALONG ℄ DAM

Mark	Description	By	Chk'd.	Recm'd.	Date

REVISIONS

COMMONWEALTH OF PENNSYLVANIA
DEPARTMENT OF TRANSPORTATION

ARMSTRONG COUNTY
SR 1038 SECTION 150
SEG 0040 OFFSET 1110
SR 1038-150 STA 1956+35.83 AND SR 4025 OVER BUFFALO AND PITTSBURGH RAILROAD
4 SPAN STEEL MULTI-GIRDER BRIDGE AND SINGLE SPAN ROLLED BEAM T-SPAN
TOOTH EXPANSION DAM DETAILS 1

COMMONWEALTH OF PENNSYLVANIA REGISTERED PROFESSIONAL ENGINEER KEITH A. MICHAEL

RECOMMENDED JUL 5 2002

SHEET 76 OF 97

S-27038

DESIGNED BY	BGC
DRAWN BY	ERK
CHECKED BY	MP

A-00122496

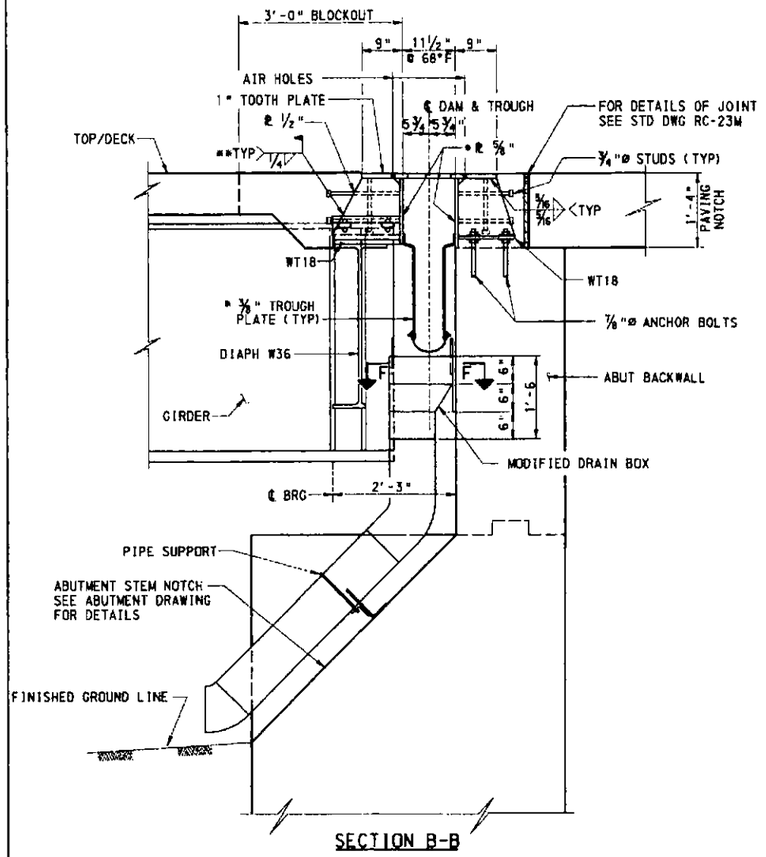

SECTION B-B

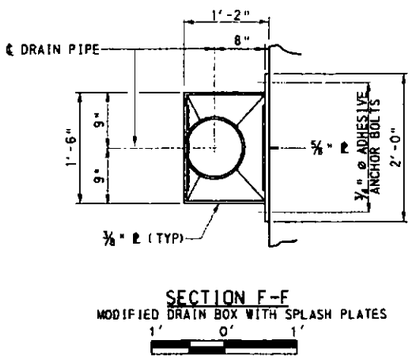

SECTION F-F
MODIFIED DRAIN BOX WITH SPLASH PLATES

1' 0' 1'

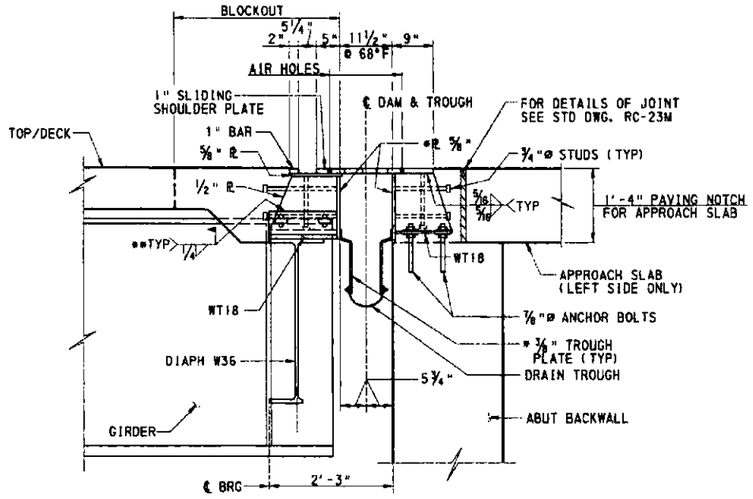

SECTION C-C

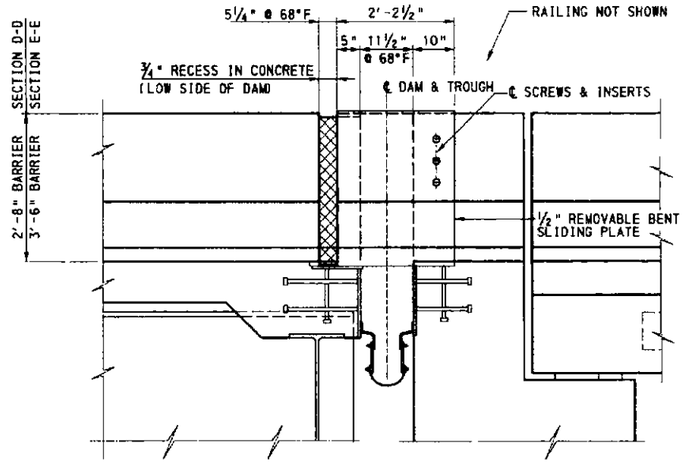

SECTION D-D SHOWN
SECTION E-E SIMILAR

NOTES:

- FOR PLAN, ELEVATION, DRAIN BOX LOCATIONS, AND LOCATION OF SECTIONS B-B THRU E-E SEE SHEET 76.
- FOR ABUTMENT DETAILS SHEETS 8, 9, AND 10.
- FOR ADDITIONAL DRAIN BOX DETAILS NOT SHOWN SEE STANDARD DRAWING BC-751M
- FOR SPLASH PLATE DETAILS AND ADDITIONAL TOOTH EXPANSION DAM DETAILS NOT SHOWN SEE STANDARD DRAWING BC-762M

LEGEND

- * STAINLESS STEEL PLATE
- ** WELD IN FIELD AFTER FINAL ADJUSTMENT

Mark	Description	By	Chk'd.	Recm'd.	Date
REVISIONS					

2' 1' 0' 2'

UNLESS NOTED

KEITH A MICHAEL

COMMONWEALTH OF PENNSYLVANIA
DEPARTMENT OF TRANSPORTATION

ARMSTRONG COUNTY
SR 1038 SECTION 150
SEG 0040 OFFSET 1110
SR 1038-150 STA 1956+35.83 AND SR 4025 OVER
BUFFALO AND PITTSBURGH RAILROAD
4 SPAN STEEL MULTI-GIRDER BRIDGE AND
SINGLE SPAN ROLLED BEAM T-SPAN
TOOTH EXPANSION DAM DETAILS 2

RECOMMENDED _____

SHEET 77 OF 97

S-27038

DESIGNED BY	BGC
DRAWN BY	EK
CHECKED BY	MP

A-00122496

S:\projects\C432\structure\Rehab\rdg\final\exc2.dgn 7/27/2007

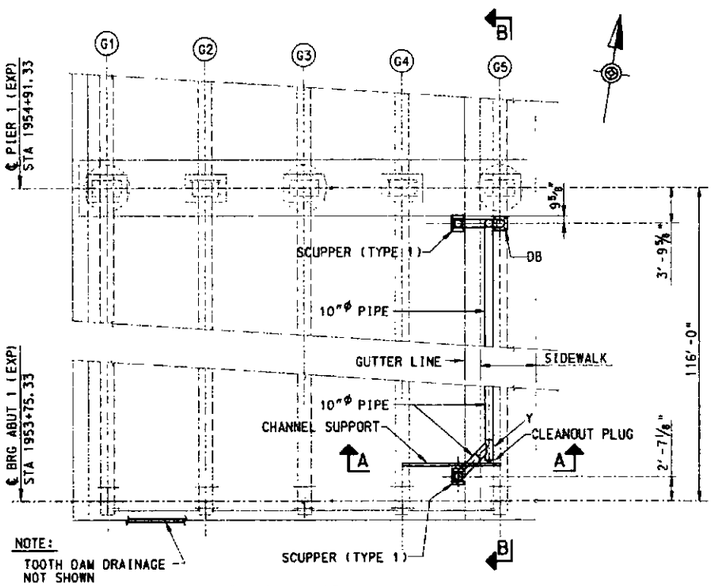

PART PLAN SPAN 1

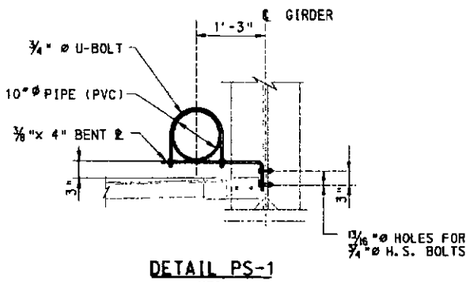

DETAIL PS-1
NTS

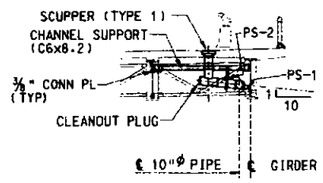

SECTION A-A

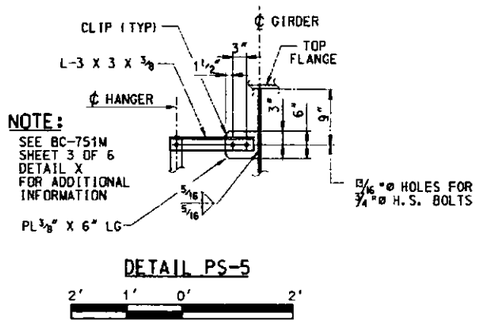

DETAIL PS-5

2' 1' 0' 2'

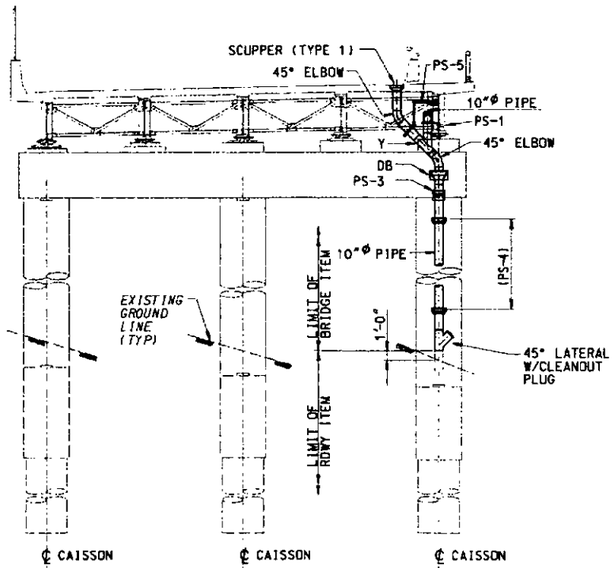

ELEVATION PIER 1

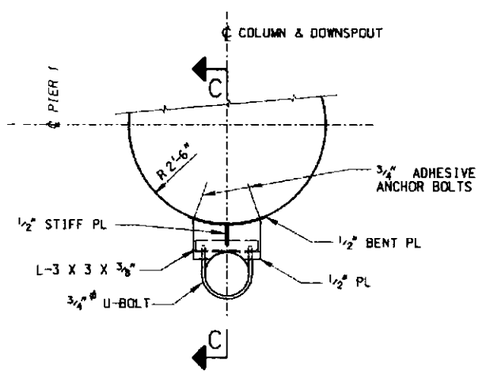

DETAIL PS-4

3' 2' 1' 0' 3'

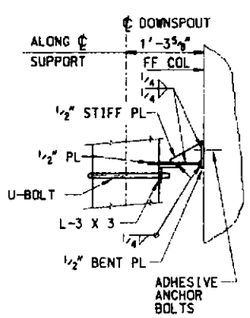

SECTION C-C

1' 0' 1'

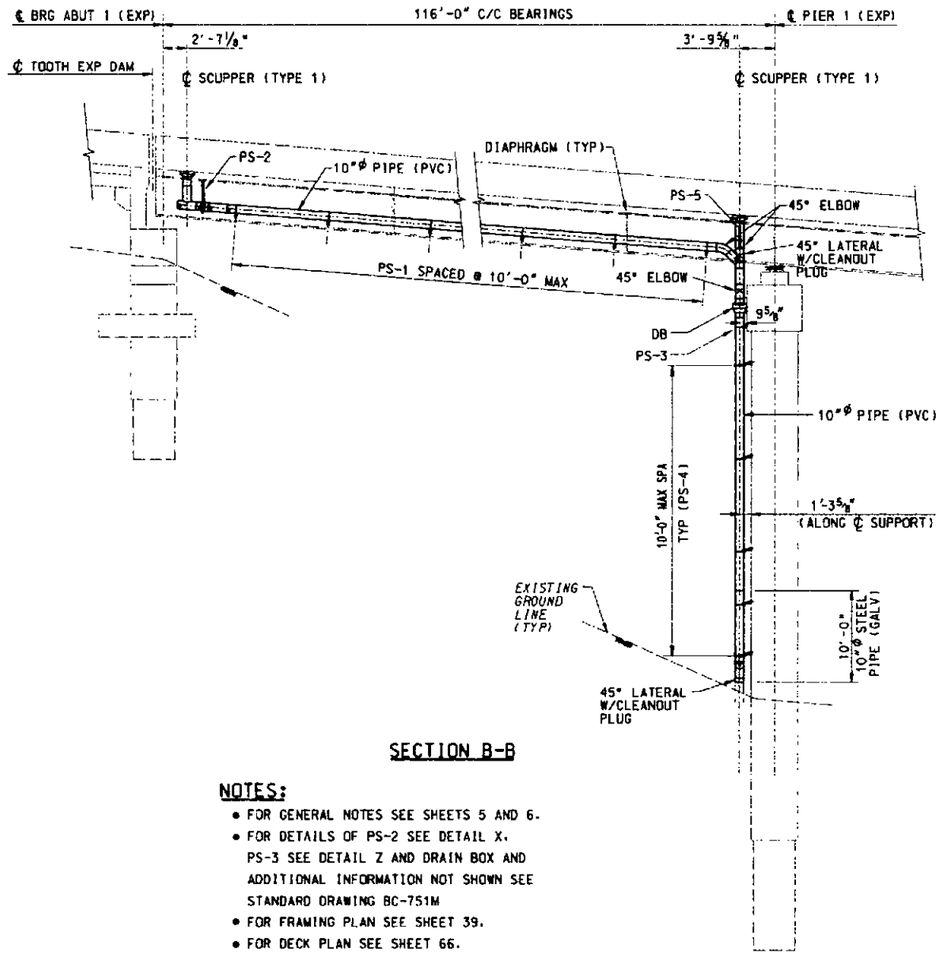

SECTION B-B

NOTES:

- FOR GENERAL NOTES SEE SHEETS 5 AND 6.
- FOR DETAILS OF PS-2 SEE DETAIL X. PS-3 SEE DETAIL Z AND DRAIN BOX AND ADDITIONAL INFORMATION NOT SHOWN SEE STANDARD DRAWING BC-751M
- FOR FRAMING PLAN SEE SHEET 39.
- FOR DECK PLAN SEE SHEET 66.
- FOR PIER 1 CAP DETAILS SEE SHEETS 18 & 19.
- FOR TOOTH DAM DRAINAGE SEE SHEETS 76 & 77.

LEGEND

PS PIPE SUPPORT
FF FRONT FACE
DB DRAIN BOX

8' 4' 0' 8'

(UNLESS NOTED)

Mark	Description	By	Chk'd.	Recm'd.	Date
	REVISIONS				

DESIGNED BY	KAM
DRAWN BY	TP
CHECKED BY	PAM

COMMONWEALTH OF PENNSYLVANIA
DEPARTMENT OF TRANSPORTATION

ARMSTRONG COUNTY
SR 1038 SECTION 150
SEG 0040 OFFSET 1110
SR 1038-150 STA 1956+35.83 AND SR 4025 OVER BUFFALO AND PITTSBURGH RAILROAD
4 SPAN STEEL MULTI-GIRDER BRIDGE AND SINGLE SPAN ROLLED BEAM T-SPAN
DRAINAGE DETAILS ABUT 1 & PIER 1

RECOMMENDED JUL 8 2008

SHEET 78 OF 97

S-27038

A-00122496

h:\eProjects\0432\Structure\Rdwy\Drainage\ABUT1PIER1.DGN 7/3/2007

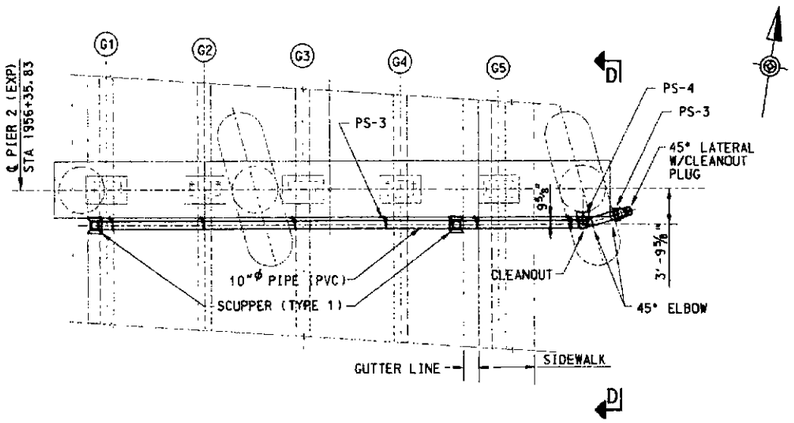

PLAN PIER 2

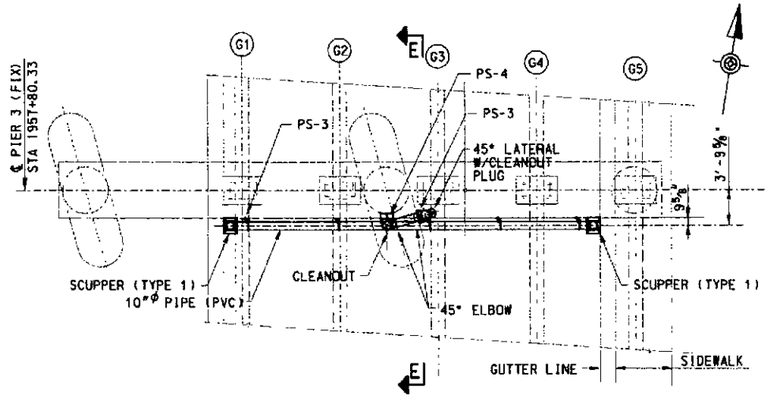

PLAN PIER 3

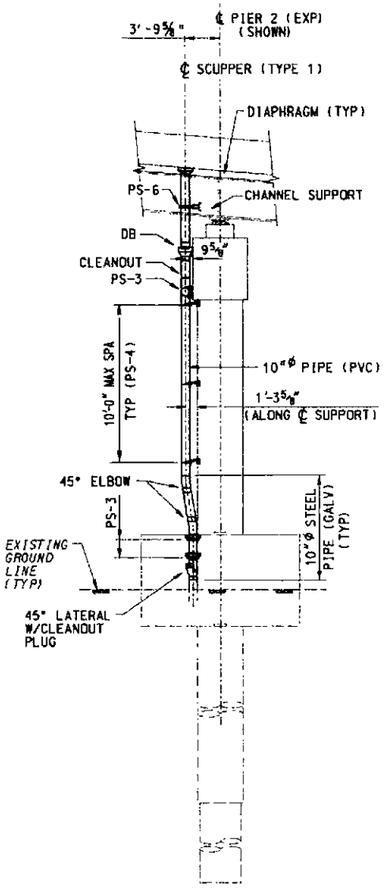

SECTION D-D
(AS SHOWN)

SECTION E-E
(SIMILAR)

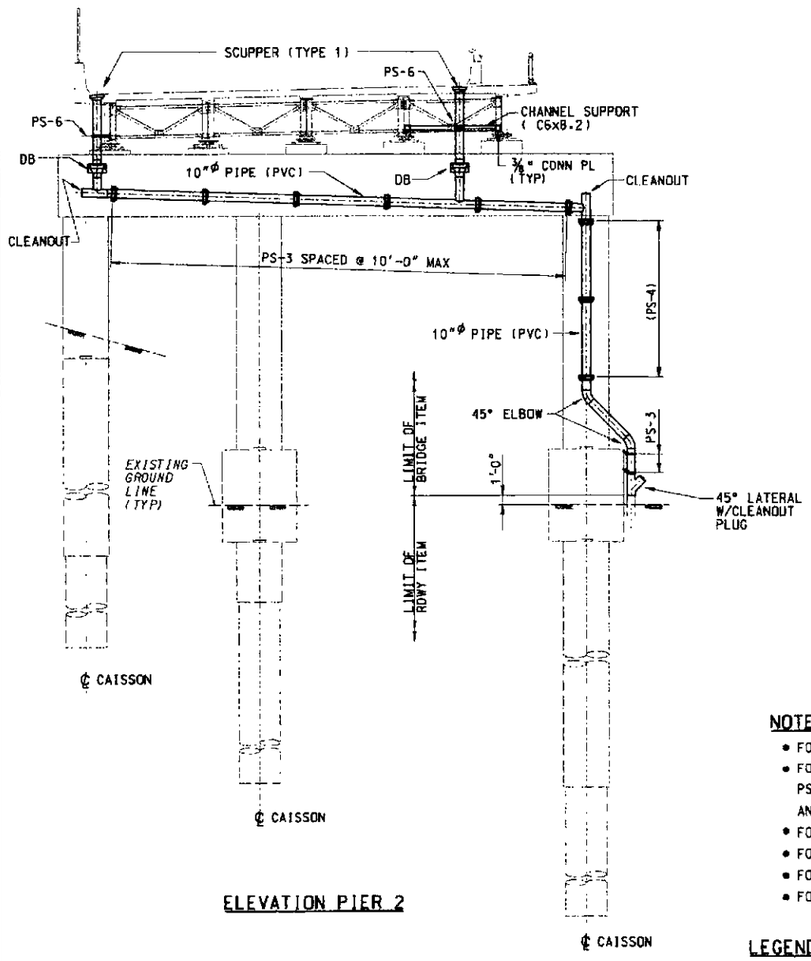

ELEVATION PIER 2

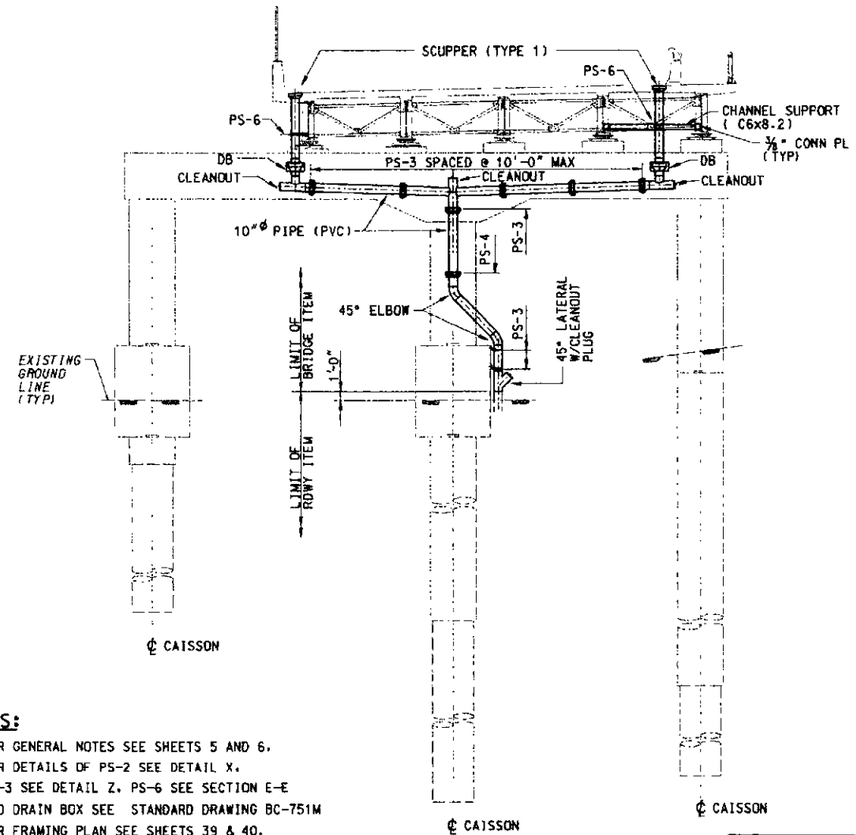

ELEVATION PIER 3

NOTES:

- FOR GENERAL NOTES SEE SHEETS 5 AND 6.
- FOR DETAILS OF PS-2 SEE DETAIL X. PS-3 SEE DETAIL Z. PS-6 SEE SECTION E-E AND DRAIN BOX SEE STANDARD DRAWING BC-751M
- FOR FRAMING PLAN SEE SHEETS 39 & 40.
- FOR DECK PLAN SEE SHEETS 67 & 68.
- FOR PIER DETAILS SEE SHEETS 20 THRU 23.
- FOR PIPE SUPPORT DETAILS PS-4 SEE SHEET 78.

LEGEND

PS PIPE SUPPORT
FF FRONT FACE
DB DRAIN BOX

8' 4' 0' 8'
(UNLESS NOTED)

Mark	Description	By	Chk'd.	Recm'd.	Date

REVISIONS

COMMONWEALTH OF PENNSYLVANIA
DEPARTMENT OF TRANSPORTATION

ARMSTRONG COUNTY
SR 1038 SECTION 150
SEG 0040 OFFSET 1110
SR 1038-150 STA 1956+35.83 AND SR 4025 OVER BUFFALO AND PITTSBURGH RAILROAD
4 SPAN STEEL MULTI-GIRDER BRIDGE AND SINGLE SPAN ROLLED BEAM T-SPAN
DRAINAGE DETAILS PIERS 2 & 3

COMMONWEALTH OF PENNSYLVANIA REGISTERED PROFESSIONAL KEITH A. MICHAEL ENGINEER

RECOMMENDED JUL 6 2007

SHEET 79 OF 97

S-27038

DESIGNED BY	KAM
DRAWN BY	TP
CHECKED BY	PAM

A-00122496

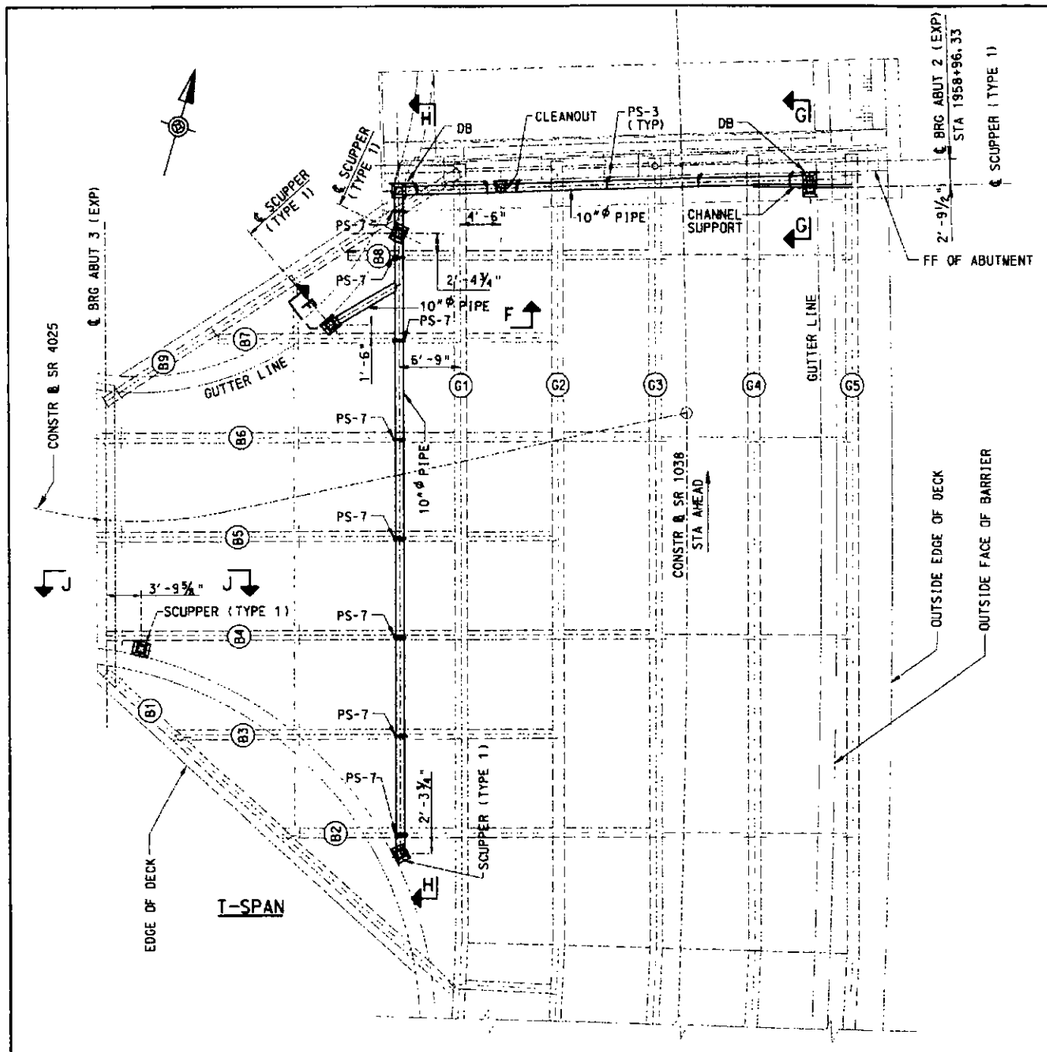

T-SPAN

PART PLAN SPAN 4

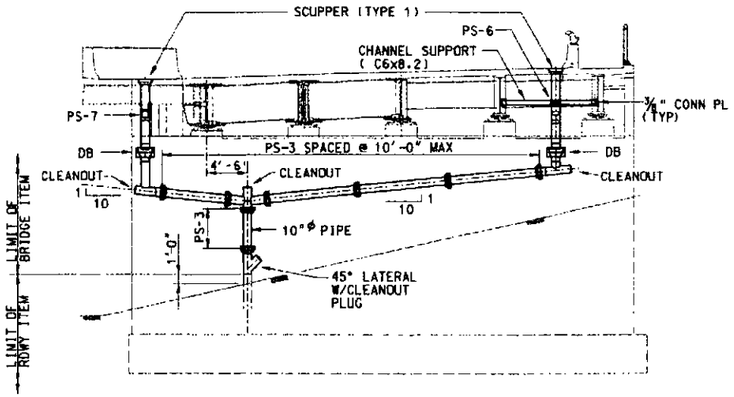

ELEVATION ABUTMENT 2

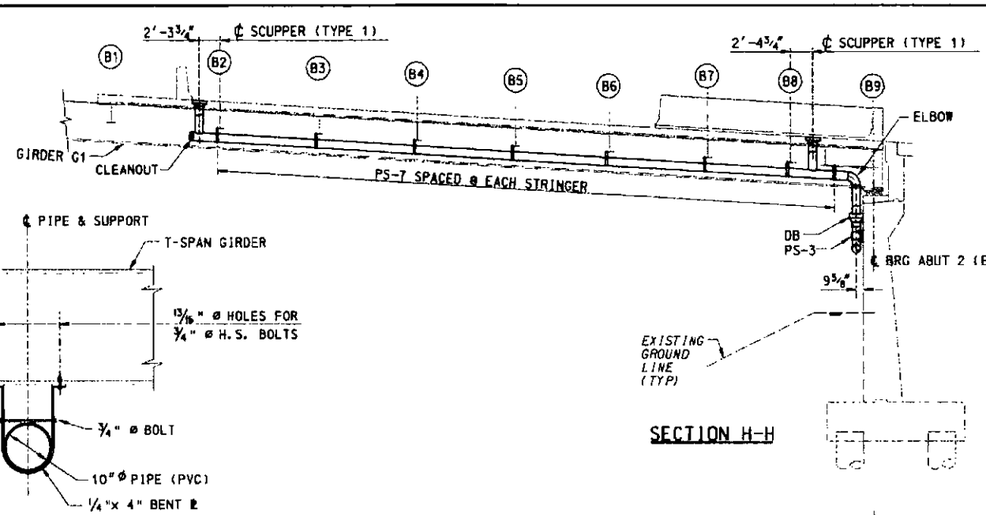

SECTION H-H

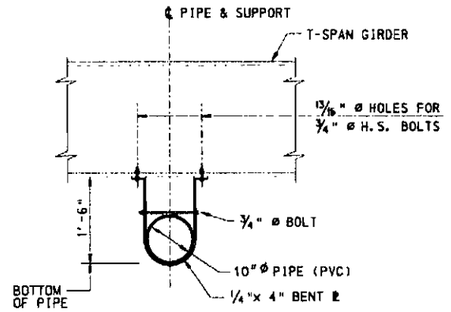

DETAIL PS-7

NTS

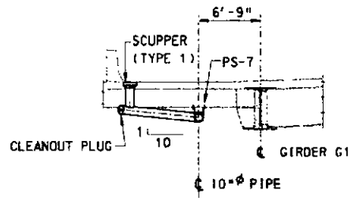

SECTION F-F

SECTION J-J

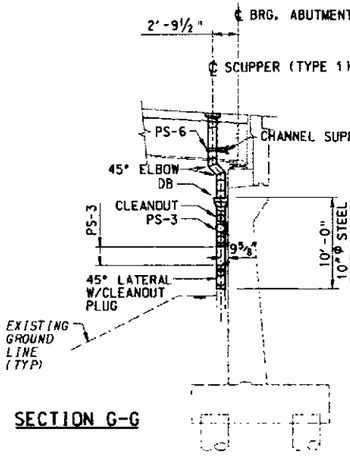

SECTION G-G

NOTES:

- FOR GENERAL NOTES SEE SHEETS 5 AND 6.
- FOR DETAILS OF PS-2 SEE DETAIL X, PS-3 SEE DETAIL Z, PS-6 SEE SECTION E-E AND DRAIN BOX AND ADDITIONAL INFORMATION NOT SHOWN SEE STANDARD DRAWING BC-751M
- FOR DETAILS OF PS-5 SEE SHEET 78.
- FOR FRAMING PLAN SEE SHEET 40.
- FOR DECK PLAN SEE SHEETS 68 & 69.
- FOR ABUTMENT 2 DETAILS SEE SHEET 24.

LEGEND

PS PIPE SUPPORT
FF FRONT FACE
DB DRAIN BOX

8' 4' 0' 8'

(UNLESS NOTED)

Mark	Description	By	Chk'd.	Recm'd.	Date
REVISIONS					

DESIGNED BY	KAM
DRAWN BY	TP
CHECKED BY	PAM

COMMONWEALTH OF PENNSYLVANIA
DEPARTMENT OF TRANSPORTATION

ARMSTRONG COUNTY
SR 1038 SECTION 150

SEG 0040 OFFSET 1110
SR 1038-150 STA 1956+35.83 AND SR 4025 OVER BUFFALO AND PITTSBURGH RAILROAD
4 SPAN STEEL MULTI-GIRDER BRIDGE AND SINGLE SPAN ROLLED BEAM T-SPAN
DRAINAGE DETAILS T-SPAN & ABUTMENT 2

COMMONWEALTH OF PENNSYLVANIA REGISTERED PROFESSIONAL KEITH A. MICHAEL ENGINEER

RECOMMENDED _____

SHEET 80 OF 97

S-27038

A-00122496

REVISE DECK BARS @ PIER C1 - LATER

ABUTMENT 1

MARK	SIZE	LENGTH	NO.	TYPE	A	B	C	D	E	F	G	H	K	REMARKS
EF401	4	2'-8"	48	31	4½"	1'-11"	4½"							
EF402	4	22'-0"	34	STR										
EF403	4	26'-2"	14	STR										
EF501	5	2'-9"	41	STR										
EF502	5	6'-6"	7	STR										
EF503	5	5'-4"	10	STR										
EF601	6	5'-6"	65	1	8"	4'-10"								
EF701	7	10'-2"	30	STR										
EF801	8	10'-2"	30	STR										
EA303	3	6'-0"	3	STR										BEND IN FIELD
EA304	3	6'-6"	3	STR										BEND IN FIELD
EA401	4	24'-6"	6	STR										
EA402	4	21'-8"	18	STR										
EA403	4	32'-7"	8	STR										
EA404	4	23'-8"	24	STR										
EA405	4	9'-8"	7	STR										
EA406	4	12'-2"	7	STR										
EA407	4	13'-9"	7	STR										
EA408	4	3'-0"	4	2	1'-6"	1'-6"	10"	3⅝"	2'-7¼"	4⅛"	6¾"	4⅞"	3⅜"	R = 2"
EA409	4	8'-0"	4	30	2'-9½"	4"	3⅜"	2¾"	1'-4½"	1'-4½"	9½"			R = 2"
EA410	4	6'-0"	4	38	2'-5¼"	4"	3"	2'-6"	3½"					
EA413	4	12'-3"	9	45	2'-6"	3'-7"	3'-8"							
EA414	4	13'-3" TO 17'-3"	9	12	3'-0" TO 5'-0"	7'-3"	3'-0" TO 5'-0"							VARY 1 EACH A & C BY 3"
EA415	4	18'-3"	9	12	2'-0"	12'-9"	3'-6"							
EA416	4	17'-7"	3	10	7'-5"	10'-2"								
EA417	4	22'-7" TO 30'-3"	2	11	3'-6"	6'-9" TO 10'-7"	7'-4"	5'-0" TO 8'-10"						VARY 1 EACH B & D BY 3'-10"
EA418	4	17'-2"	4	11	3'-6"	4'-4"	7'-4"	2'-0"						
EA419	4	9'-0"	4	STR										
EA420	4	12'-9"	3	STR										
EA421	4	21'-0"	8	STR										
EA422	4	3'-6"	40	STR										

ABUTMENT 1

MARK	SIZE	LENGTH	NO.	TYPE	A	B	C	D	E	F	G	H	K	REMARKS
EA501	5	8'-9"	32	STR										
EA502	5	7'-4"	29	45	2'-0"	3'-7"	1'-9"	0	3½"					
EA503	5	10'-1"	2	2	4'-11"	5'-2"	3'-6"							
EA504	5	9'-3"	10	12	2'-0"	5'-3"	2'-0"							
EA505	5	14'-0"	9	2	3'-6"	10'-6"	2'-5"							
EA506	5	11'-3"	7	STR										
EA507	5	6'-6"	14	STR										
EA508	5	8'-3"	6	10	5'-3"	3'-0"								
EA509	5	5'-0"	4	STR										
EA510	5	3'-9"	78	STR										
EA511	5	5'-9"	52	STR										
EA512	5	6'-9"	49	12	2'-11"	11"	2'-11"							
EA514	5	16-0"	8	11	2'-0"	5'-3"	3'-6"	5'-3"						
EA515	5	10'-2"	19	12	4'-3"	1'-8"	4'-3"							
EA516	5	11'-6"	7	12	5'-3"	1'-0"	5'-3"							
EA517	5	7'-2"	6	STR										
EA518	5	6'-2"	4	STR										
EA519	5	8'-5"	20	12	2'-9"	3'-0"	2'-9"							
EA520	5	8'-11"	16	12	2'-9"	3'-5"	2'-9"							
EA521	5	2'-10"	14	STR										
EA528	5	10'-10"	5	12	4'-8"	1'-6"	4'-8"							
EA529	5	8'-4½"	6	12	3'-6"	1'-4½"	3'-6"							
EA601	6	12'-0"	65	STR										
EA602	6	6'-9"	25	10	1'-7"	5'-2"								
EA603	6	6'-3"	25	10	1'-7"	4'-8"								
EA604	6	8'-0½"	4	12	3'-4"	1'-4½"	3'-4"							
EA605	6	14'-11"	7	12	4'-7"	3'-7"	6'-9"							
EA606	6	17'-1"	11	12	6'-9"	3'-7"	6'-9"							
EA607	6	8'-2"	8	STR										
EA901	9	17'-5"	11	46	1'-3"	12'-7"	3'-7"							
EC401	4	6'-6"	4	30	1'-11½"	4"	4½"	3⅝"	1'-9¾"	4⅛"	6¾"	5¾"	2¼"	
EC501	5	1'-8"	4	STR										
EC601	6	1'-8"	4	STR										

BAR BENDING DIAGRAMS

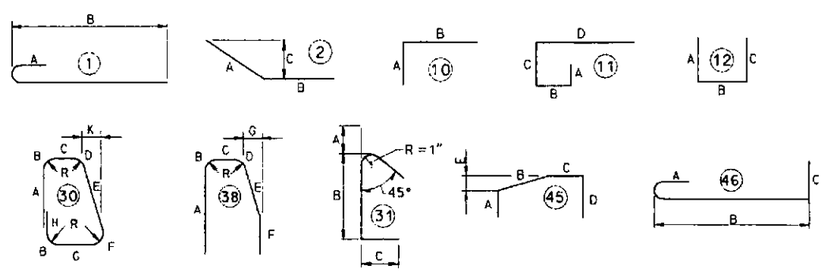

NOTES

- PREFIX E DENOTES EPOXY COATED REINFORCEMENT BARS.
- ALL DIMENSIONS ARE OUT TO OUT OF BAR EXCEPT "A" AND "C" ON STANDARD 135° AND 180° HOOKS, AND "R" WHICH IS SHOWN TO THE INSIDE OF THE BAR.
- FOR REINFORCEMENT BAR FABRICATION DETAILS, REFER TO STANDARD DRAWING BC-736M.
- FIGURES IN CIRCLES SHOW TYPES.

Mark	Description	By	Chk'd.	Recm'd.	Date
REVISIONS					

DESIGNED BY	BGC
DRAWN BY	ERK
CHECKED BY	MP

COMMONWEALTH OF PENNSYLVANIA
DEPARTMENT OF TRANSPORTATION

ARMSTRONG COUNTY
SR 1038 SECTION 150
SEG 0040 OFFSET 1110
SR 1038-150 STA 1956+35.83 AND SR 4025 OVER
BUFFALO AND PITTSBURGH RAILROAD
4 SPAN STEEL MULTI-GIRDER BRIDGE AND
SINGLE SPAN ROLLED BEAM T-SPAN
ABUTMENT 1 REINFORCING BAR SCHEDULE

REGISTERED PROFESSIONAL KEITH A. MICHEL ENGINEER COMMONWEALTH OF PENNSYLVANIA

RECOMMENDED _____ JUL 5 2011

SHEET 81 OF 97

S-27038

A-00122496

n:\dpt\6\601840432481\051dr648_x11testing#1\bar6bar3.dgn 7/5/2011

PIER C1

MARK	SIZE	LENGTH	NO.	TYPE	A	B	C	D	E	F	G	H	K	REMARKS
EP455	4	1'-8"	10	STR										
EP457	4	8'-4"	7	12	5'-0"	10½"	5'-0"							R=10½"
EP458	4	9'-2"	8	45	2'-4"	4½"	1'-1"							R=1'-1½"
EP459	4	16'-0"	19	STR										
EP460	4	10'-6" TO 15'-6"	10	STR										VARY 2 EA BY 1'-3"
EP461	4	10'-7"	13	STR										
EP462	4	7'-8"	12	12	2'-0"	3'-8"	2'-0"							
EP463	4	7'-2"	28	12	1'-9"	3'-8"	1'-9"							
EP464	4	12'-8"	22	STR										
EP465	4	3'-6" TO 7'-0"	10	STR										VARY 2 EA BY 10½"
EP466	4	10'-3"	2	2	9'-0"	2'-7"	1'-11⅜"							
EP467	4	5'-9"	42	2	1'-10"	3'-11"	1'-1⅜"							
EP469	4	3'-6"	16	STR										
EP556	5	14'-3"	12	45	3'-8"	5½"	1'-9¾"							R=1'-9¾"
EP568	5	10'-8"	3	STR										
EP569	5	5'-8"	12	12	2'-0"	1'-8"	2'-0"							
EP570	5	8'-0"	3	12	3'-6"	1'-0"	3'-6"							
EP571	5	7'-6"	3	12	3'-6"	6"	3'-6"							
EP753	7	17'-2"	6	12	2'-2"	12'-10"	2'-2"							
EP852	8	9'-6"	30	10	4'-6"	5'-0"								

PIER C2

MARK	SIZE	LENGTH	NO.	TYPE	A	B	C	D	E	F	G	H	K	REMARKS
EP451	4	14'-9"	10	22	2'-4"	4'-8"	2'-4"	4'-8"	4½"					
EP452	4	9'-11" TO 14'-7"	18	22	2'-4"	2'-3" TO 4'-7"	2'-4"	2'-3" TO 4'-7"	4½"					VARY 2 EA B&D BY 3½"
EP454	4	3'-8"	4	STR										
EP468	4	17'-5"	6	22	3'-8"	4'-8"	3'-8"	4'-8"	4½"					
EP551	5	12'-10"	4	STR										
EP552	5	7'-11" TO 10'-9"	4	STR										VARY 2 EA BY 2'-10"
EP553	5	4'-9"	6	STR										
EP554	5	9'-11"	6	2	1'-9"	8'-2"	6¼"							
EP555	5	7'-1"	4	12	1'-9"	3'-7"	1'-9"							
EP556	5	14'-8"	11	45	3'-8"	5½"	2'-2¾"							R=1'-9⅜"
EP563	5	5'-0"	12	STR										
EP567	5	7'-8"	12	12	2'-0"	3'-8"	2'-0"							
EP568	5	10'-8"	5	STR										
EP571	5	7'-6"	6	12	3'-6"	6"	3'-6"							
EP751	7	15'-0"	6	10	2'-2"	12'-10"								
EP852	8	9'-6"	28	10	4'-6"	5'-0"								

PIER C3

MARK	SIZE	LENGTH	NO.	TYPE	A	B	C	D	E	F	G	H	K	REMARKS
EP451	4	14'-9"	10	22	2'-4"	4'-8"	2'-4"	4'-8"	4½"					
EP452	4	9'-11" TO 14'-7"	18	22	2'-4"	2'-3" TO 4'-7"	2'-4"	2'-3" TO 4'-7"	4½"					VARY 2 EA B&D BY 3½"
EP453	4	6'-6"	6	12	3'-0"	6"	3'-0"							
EP454	4	3'-8"	4	STR										
EP468	4	17'-5"	6	22	3'-8"	4'-8"	3'-8"	4'-8"	4½"					
EP551	5	12'-10"	4	STR										
EP552	5	7'-11" TO 10'-9"	4	STR										VARY 2 EA BY 2'-10"
EP553	5	4'-9"	6	STR										
EP554	5	9'-11"	6	2	1'-9"	8'-2"	6¼"							
EP555	5	7'-1"	4	12	1'-9"	3'-7"	1'-9"							
EP556	5	14'-8"	11	45	3'-8"	5½"	2'-2¾"							R=1'-9⅜"
EP563	5	5'-0"	12	STR										
EP567	5	7'-8"	12	12	2'-0"	3'-8"	2'-0"							
EP568	5	10'-8"	5	STR										
EP751	7	15'-0"	6	10	2'-2"	12'-10"								
EP851	1"ø	3'-0"	4	STR										DOWEL
EP852	8	9'-6"	28	10	4'-6"	5'-0"								

PIER C4

MARK	SIZE	LENGTH	NO.	TYPE	A	B	C	D	E	F	G	H	K	REMARKS
EP451	4	14'-9"	10	22	2'-4"	4'-8"	2'-4"	4'-8"	4½"					
EP452	4	9'-11" TO 14'-7"	18	22	2'-4"	2'-3" TO 4'-7"	2'-4"	2'-3" TO 4'-7"	4½"					VARY 2 EA B&D BY 3½"
EP454	4	3'-8"	4	STR										
EP468	4	17'-5"	6	22	3'-8"	4'-8"	3'-8"	4'-8"	4½"					
EP551	5	12'-10"	4	STR										
EP552	5	7'-11" TO 10'-9"	4	STR										VARY 2 EA BY 2'-10"
EP553	5	4'-9"	6	STR										
EP554	5	9'-11"	6	2	1'-9"	8'-2"	6¼"							
EP555	5	7'-1"	4	12	1'-9"	3'-7"	1'-9"							
EP556	5	14'-8"	12	45	3'-8"	5½"	2'-2¾"							R=1'-9⅜"
EP563	5	5'-0"	12	STR										R=2'-1⅞"
EP567	5	7'-8"	12	12	2'-0"	3'-8"	2'-0"							
EP568	5	10'-8"	5	STR										
EP571	5	7'-6"	6	12	3'-6"	6"	3'-6"							
EP751	7	15'-0"	6	10	2'-2"	12'-10"								
EP852	8	7'-10"	30	10	4'-6"	5'-0"								

PIER C5

MARK	SIZE	LENGTH	NO.	TYPE	A	B	C	D	E	F	G	H	K	REMARKS
EP451	4	14'-9"	10	22	2'-4"	4'-8"	2'-4"	4'-8"	4½"					
EP452	4	9'-11" TO 14'-7"	18	22	2'-4"	2'-3" TO 4'-7"	2'-4"	2'-3" TO 4'-7"	4½"					VARY 2 EA B&D BY 3½"
EP454	4	3'-8"	4	STR										
EP468	4	17'-5"	7	22	3'-8"	4'-8"	3'-8"	4'-8"	4½"					
EP551	5	12'-10"	4	STR										
EP552	5	7'-11" TO 10'-9"	4	STR										VARY 2 EA BY 2'-10"
EP553	5	4'-9"	6	STR										
EP554	5	9'-11"	6	2	1'-9"	8'-2"	6¼"							
EP555	5	7'-1"	4	12	1'-9"	3'-7"	1'-9"							
EP556	5	14'-8"	12	45	3'-8"	5½"	2'-2¾"							R=1'-9⅜"
EP566	5	5'-9"	12	STR										R=2'-1⅞"
EP567	5	7'-8"	12	12	2'-0"	3'-8"	2'-0"							
EP568	5	10'-8"	5	STR										
EP571	5	7'-6"	6	12	3'-6"	6"	3'-6"							
EP751	7	15'-0"	6	10	2'-2"	12'-10"								
EP852	8	7'-10"	30	10	4'-6"	5'-0"								

NOTES

- PREFIX E DENOTES EPOXY COATED REINFORCEMENT BARS.
- ALL DIMENSIONS ARE OUT TO OUT OF BAR EXCEPT "A" AND "C" ON STANDARD 135° AND 180° HOOKS, AND "R" WHICH IS SHOWN TO THE INSIDE OF THE BAR.
- FOR REINFORCEMENT BAR FABRICATION DETAILS, REFER TO STANDARD DRAWING BC-736M.
- FIGURES IN CIRCLES SHOW TYPES.

BAR BENDING DIAGRAMS

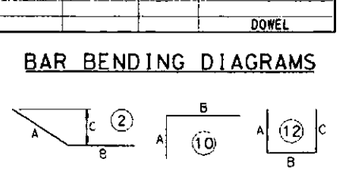

Mark	Description	By	Chk'd.	Recm'd.	Date
REVISIONS					

COMMONWEALTH OF PENNSYLVANIA
DEPARTMENT OF TRANSPORTATION

ARMSTRONG COUNTY
SR 1038 SECTION 150
SEG 0040 OFFSET 1110
SR 1038-150 STA 1956+35.83 AND SR 4025 OVER
BUFFALO AND PITTSBURGH RAILROAD
4 SPAN STEEL MULTI-GIRDER BRIDGE AND
SINGLE SPAN ROLLED BEAM T-SPAN
PIER C1 THRU C5 REINFORCEMENT BAR SCHEDULE

COMMONWEALTH OF PENNSYLVANIA
PROFESSIONAL
KEITH A. MICHAEL
ENGINEER

RECOMMENDED JUL 8 2008

DESIGNED BY	JPL
DRAWN BY	TP
CHECKED BY	RLG

SHEET 82 OF 97

S-27038

A-00122496

7/3/2008

DECK - WINGWALL A

MARK	SIZE	LENGTH	NO.	TYPE	A	B	C	D	E	F	G	H	K	REMARKS
ES406	4	6'-5"	177	29	1'-7½"	4"	4"	2'-0"	2¾"	10⁹⁄₁₆"	1'-0"	4"		R = 2"
ES451	4	25'-6"	30	STR										
ES452	4	15'-6"	90	STR										
ES453	4	4'-10"	14	15	9"	1'-2"	10"	2'-1"	6⅞"					
ES551	5	24'-0"	94	STR										
ES552	5	14'-7"	163	4	7"	13'-5"								
ES553	5	5'-6"	167	13	9"	4"	10"	1'-0"	2'-7"	6⅞"				
ES554	5	13'-6"	197	STR										
ES555	5	26'-3"	94	STR										
ES651	6	14'-9"	4	4	8"	13'-5"								
ES652	6	13'-5"	6	STR										
EC401	4	6'-5¼"	177	30	1'-11½"	4"	4½"	3⅜"	1'-9¾"	4⅛"	6¾"	5"	2¼"	R = 2"
EC412	4	3'-10"	2	17	2'-1½"	4"	9"	3½"						R = 2"
EC413	4	4'-5"	2	17	2'-1½"	4"	1'-4"	3½"						R = 2"
EC414	4	5'-0"	4	17	2'-1½"	4"	1'-11"	3½"						R = 2"
EC415	4	5'-8"	8	10	2'-7½"	4"	2'-8½"							R = 2"
EC416	4	7'-7"	1	17	2'-1"	4"	2'-9"	2'-1"						R = 2"
EC417	4	8'-9"	1	17	2'-8"	4"	2'-9"	2'-8"						R = 2"
EC418	4	8'-11½"	7	47	3'-5"	2"	1'-9½"	2'-5"						R = 2"
EC551	5	54'-3"	12	STR										
EC651	6	54'-6"	12	STR										
ED451	4	5'-10"	4	13	1'-0"	1'-4"	1'-6"	2'-0"	-	8½"				
ED452	4	6'-3"	42	12	2'-0"	2'-3"	2'-0"							
ED453	4	7'-3"	14	12	2'-0"	3'-3"	2'-0"							
ED454	4	4'-9"	8	12	2'-0"	9"	2'-0"							
ED455	4	3'-10"	4	10	1'-9"	2'-1"								
ED551	5	11"	144	STR										THRD. 1 END 3"
ED552	5	1'-6"	24	STR										THRD. 1 END 3"
ED553	5	4'-9"	12	12	1'-3"	2'-3"	1'-3"							
ED554	5	5'-9"	4	12	1'-3"	3'-3"	1'-3"							
ED555	5	8"	6	STR										
ED556	5	10'-4"	3	STR										

WALL - WINGWALL A

MARK	SIZE	LENGTH	NO.	TYPE	A	B	C	D	E	F	G	H	K	REMARKS
EW551	5	4'-8"	110	12	1'-9"	1'-5"	1'-9"							
EW552	5	13'-0"	100	STR										
EW553	5	13'-0" TO 13'-11"	48	STR										VARY 2 EACH BY ⅛" (-)
EW554	5	13'-11" TO 14'-7"	36	STR										VARY 2 EACH BY ⅛" (-)
EW555	5	14'-7" TO 15'-2"	30	STR										VARY 2 EACH BY ⅛" (-)
EW556	5	14'-11"	6	STR										
EW557	5	5'-5"	32	7	2'-3"	1'-5"	1'-9"	10½"						
EW558	5	5'-6"	16	12	2'-0"	1'-6"	2'-0"							
EW459	4	3'-6"	88	STR										
EW460	4	6'-0"	8	STR										
EW661	6	36'-8"	39	STR										
EW662	6	34'-7"	80	STR										
EW663	6	25'-2"	88	STR										

NOTES

- PREFIX E DENOTES EPOXY COATED REINFORCEMENT BARS.
- ALL DIMENSIONS ARE OUT TO OUT OF BAR EXCEPT " A" AND "G" ON STANDARD 135° AND 180° HOOKS, AND "R" WHICH IS SHOWN TO THE INSIDE OF THE BAR.
- FOR REINFORCEMENT BAR FABRICATION DETAILS, REFER TO STANDARD DRAWING BC-736M.
- FIGURES IN CIRCLES SHOW TYPES.

Mark	Description	By	Chk'd.	Recm'd.	Date
REVISIONS					

BAR BENDING DIAGRAMS

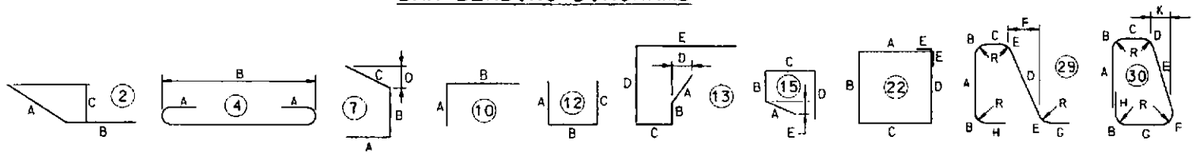

DESIGNED BY	RES
DRAWN BY	RLG
CHECKED BY	PAM

COMMONWEALTH OF PENNSYLVANIA
DEPARTMENT OF TRANSPORTATION

ARMSTRONG COUNTY
SR 1038 SECTION 150
SEG 0040 OFFSET 1110
SR 1038-150 STA 1956+35.83 AND SR 4025 OVER
BUFFALO AND PITTSBURGH RAILROAD
4 SPAN STEEL MULTI-GIRDER BRIDGE AND
SINGLE SPAN ROLLED BEAM T-SPAN
WINGWALL A REINF BAR SCHEDULE

RECOMMENDED _____

SHEET 83 OF 97

S-27038

A-00122496

h:\pw\projects\01\structures\38\ffontingwl\ffontingwl_bar_sch.dgn 7/5/2001

PIER 1

MARK	SIZE	LENGTH	NO.	TYPE	A	B	C	D	E	F	G	H	K	REMARKS
EP401	4	16'-1"	165	45	4'-4"	4½"	1'-8⅝"							R=2'-1½"
EP402	4	14'-5"	4	22	4'-2"	2'-8"	4'-2"	2'-8"	4½"					
EP501	5	12'-4"	22	12	3'-4"	5'-8"	3'-4"							
EP502	5	10'-0"	200	12	3'-4"	3'-4"	3'-4"							
EP503	5	48'-6"	10	STR										
EP504	5	9'-1"	12	12	1'-9¼"	5'-6½"	1'-9¼"							
EP505	5	8'-3"	25	12	2'-10"	2'-7"	2'-10"							
EP506	5	9'-9"	20	12	2'-10"	4'-1"	2'-10"							
EP1001	10	35'-11"	9	STR										
EP1002	10	28'-4"	9	STR										
EP1003	10	41'-11"	9	STR										
EP1004	10	34'-4"	9	STR										
EP1005	10	50'-5"	9	STR										
EP1006	10	42'-10"	9	STR										
EP1007	10	58'-0"	8	12	4'-8"	48'-8"	4'-8"							
EP1008	10	51'-6"	8	4	1'-5"	48'-8"								
EP1009	10	48'-6"	8	STR										

PIER 2

MARK	SIZE	LENGTH	NO.	TYPE	A	B	C	D	E	F	G	H	K	REMARKS
EP402	4	14'-5"	4	22	4'-2"	2'-8"	4'-2"	2'-8"	4½"					
EP420	4	15'-8"	40	12	5'-7"	4'-6"	5'-7"							
EP421	4	9'-8"	40	STR										
EP515	5	16'-3"	17	45	4'-4"	5½"	1'-8⅝"							R=2'-1⅞"
EP516	5	16'-6"	55	45	4'-4"	5½"	1'-11⅜"							R=2'-1⅞"
EP517	5	16'-10"	55	45	4'-4"	5½"	2'-3⅝"							R=2'-1⅞"
EP518	5	60'-0"	12	STR										
EP519	5	9'-7"	12	12	2'-0¼"	5'-6½"	2'-0¼"							
EP520	5	12'-9"	292	12	4'-4"	4'-1"	4'-4"							
EP521	5	9'-1"	25	12	3'-3"	2'-7"	3'-3"							
EP522	5	10'-7"	20	12	3'-3"	4'-1"	3'-3"							
EP523	5	14'-4"	16	12	4'-4"	5'-8"	4'-4"							
EP524	5	14'-9"	3	45	3'-10"	5½"	1'-9½"							R=1'-10⅞"
EP615	6	13'-11"	64	12	4'-11"	4'-1"	4'-11"							
EP617	6	11'-6"	44	STR										
EP618	6	8'-11"	44	21	2'-9"	3'-5"	2'-9"							R=2'-1¾"
EP916	9	19'-0"	18	STR										
EP917	9	29'-0"	22	STR										
EP918	9	21'-10"	20	STR										
EP1115	11	56'-3"	5	10	6'-5"	49'-10"								
EP1116	11	46'-3"	5	10	6'-5"	39'-10"								
EP1117	11	30'-0"	4	STR										
EP1118	11	40'-5"	5	1	1'-7"	38'-10"								
EP1119	11	59'-8"	10	4	1'-7"	56'-6"								
EP1120	11	27'-3"	5	10	6'-5"	20'-10"								
EP1121	11	37'-3"	5	10	6'-5"	30'-10"								
EP1122	11	49'-3"	5	1	1'-7"	47'-8"								
EP1123	11	32'-3"	5	1	1'-7"	30'-8"								
EP1124	11	23'-5"	5	1	1'-7"	21'-10"								

PIER 3

MARK	SIZE	LENGTH	NO.	TYPE	A	B	C	D	E	F	G	H	K	REMARKS
EP402	4	14'-5"	6	22	4'-2"	2'-8"	4'-2"	2'-8"	4½"					
EP420	4	15'-8"	40	12	5'-7"	4'-6"	5'-7"							
EP421	4	9'-8"	40	STR										
EP530	5	15'-0"	7	45	3'-10"	5½"	2'-0½"							R=1'-10⅞"
EP531	5	16'-6"	82	45	4'-4"	5½"	1'-11½"							R=2'-1⅞"
EP532	5	16'-7"	37	45	4'-4"	5½"	2'-0½"							R=2'-1⅞"
EP534	5	11'-0" TO 15'-6"	4	STR										(VARY 2 EA BY 4'-6")
EP535	5	33'-9"	16	STR										
EP536	5	9'-9"	8	12	2'-1¼"	5'-6½"	2'-1¼"							
EP537	5	12'-6"	16	12	3'-5"	5'-8"	3'-5"							
EP538	5	10'-11"	244	12	3'-5"	4'-1"	3'-5"							
EP539	5	11'-11"	32	12	3'-11"	4'-1"	3'-11"							
EP540	5	9'-9"	25	12	3'-7"	2'-7"	3'-7"							
EP541	5	11'-3"	20	12	3'-7"	4'-1"	3'-7"							
EP617	6	11'-6"	44	STR										
EP618	6	8'-11"	44	21	2'-9"	3'-5"	2'-9"							
EP630	6	14'-7"	100	12	5'-3"	4'-1"	5'-3"							
EP930	9	19'-6"	15	STR										
EP931	9	12'-4"	15	STR										
EP932	9	17'-0"	11	STR										
EP933	9	22'-6"	16	STR										
EP934	9	15'-4"	16	STR										
EP1130	11	35'-8"	5	10	5'-8"	30'-0"								
EP1131	11	57'-8"	5	10	5'-8"	52'-0"								
EP1132	11	53'-4"	4	1	1'-7"	51'-9"								
EP1133	11	31'-4"	4	1	1'-7"	29'-9"								
EP1134	11	45'-1"	3	1	1'-7"	43'-6"								
EP1135	11	36'-1"	3	1	1'-7"	34'-6"								
EP1136	11	30'-1"	3	1	1'-7"	28'-6"								
EP1137	11	39'-1"	3	1	1'-7"	37'-6"								
EP1138	11	28'-10"	5	1	1'-7"	27'-3"								
EP1139	11	51'-8"	5	10	5'-8"	46'-0"								
EP1140	11	29'-8"	5	10	5'-8"	24'-0"								
EP1141	11	25'-4"	4	1	1'-7"	23'-9"								
EP1142	11	47'-4"	4	1	1'-7"	45'-9"								
EP1143	11	55'-9"	5	46	9'-0"	6'-0½"	5'-10"	6'-0½"	27'-3"	1'-7"	2'-6"			
EP1144	11	49'-9"	5	46	9'-0"	6'-0½"	5'-10"	6'-0½"	21'-3"	1'-7"	2'-6"			
EP1145	11	22'-10"	5	1	1'-7"	21'-3"								

NOTES

- PREFIX E DENOTES EPOXY COATED REINFORCEMENT BARS.
- ALL DIMENSIONS ARE OUT TO OUT OF BAR EXCEPT " A" AND "G" ON STANDARD 135° AND 180° HOOKS, AND "R" WHICH IS SHOWN TO THE INSIDE OF THE BAR.
- FOR REINFORCEMENT BAR FABRICATION DETAILS, REFER TO STANDARD DRAWING BC-736M.
- FIGURES IN CIRCLES SHOW TYPES.

Mark	Description	By	Chk'd.	Recm'd.	Date
REVISIONS					

BAR BENDING DIAGRAMS

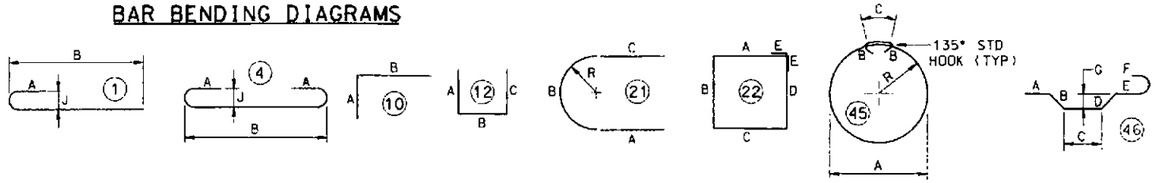

DESIGNED BY	JPL
DRAWN BY	TP
CHECKED BY	RLG

COMMONWEALTH OF PENNSYLVANIA
DEPARTMENT OF TRANSPORTATION

ARMSTRONG COUNTY
SR 1038 SECTION 150
SEG 0040 OFFSET 1110
SR 1038-150 STA 1956+35.83 AND SR 4025 OVER
BUFFALO AND PITTSBURGH RAILROAD
4 SPAN STEEL MULTI-GIRDER BRIDGE AND
SINGLE SPAN ROLLED BEAM T-SPAN
PIER 1, 2 & 3 REINFORCEMENT BAR SCHEDULE

RECOMMENDED _____

SHEET 84 OF 97

S-27038

A-00122496

ABUTMENT 2

MARK	SIZE	LENGTH	NO.	TYPE	A	B	C	D	E	F	G	H	K	REMARKS
EF440	4	4'-5"	75	31	4½"	3'-8"	4½"							
EF441	4	2'-2"	57	STR										
EF442	4	2'-9"	14	STR										
EF540	5	2'-9"	17	STR										
EF640	6	56'-8"	35	STR										
EF641	6	6'-9"	7	1	8"	6'-1"								
EF840	8	14'-8"	49	STR										
EF841	8	10'-8"	47	1	11"	9'-9"								
EF940	9	14'-8"	58	STR										
EF941	9	21'-6"	45	1	1'-3"	20'-3"								
EF942	9	20'-1"	12	1	1'-3"	18'-10"								
EF943	9	11'-11"	7	1	1'-3"	10'-8"								
EA340	3	13'-0"	3	STR										BEND IN FIELD
EA341	3	10'-10"	3	STR										BEND IN FIELD
EA342	3	11'-0"	3	STR										BEND IN FIELD
EA441	4	21'-5"	57	STR										
EA442	4	51'-2"	55	45	1'-3"	2'-6"	1'-5"	0"	3½"					
EA444	4	31'-3"	42	STR										
EA445	4	28'-6"	23	STR										
EA446	4	7'-0"	52	STR										
EA447	4	6'-0"	8	38	2'-5¼"	4"	3"	2¾"	1'-4½"	1'-4½"	9½"			R = 2"
EA448	4	24'-10"	33	STR										
EA449	4	20'-10"	23	STR										
EA450	4	20'-8"	9	STR										
EA451	4	3'-6"	8	STR										
EA540	5	21'-5"	17	STR										
EA541	5	10'-5"	23	11	1'-6"	3'-5"	4'-0"	1'-6"						
EA542	5	7'-6"	7	STR										
EA543	6	8'-8"	7	12	4'-0"	8"	4'-0"							
EA544	5	8'-6"	2	STR										
EA545	5	8'-11"	2	10	1'-6"	7'-5"								
EA546	5	12'-2"	23	11	1'-6"	5'-2"	4'-0"	1'-6"						
EA547	5	7'-8"	6	15	3'-8¾"	1'-9"	3'-11¼"	1'-9"	1'-2"					
EA548	5	2'-6"	6	2	1'-3"	1'-3"	1'-2½"							
EA549	5	6'-4"	13	STR										
EA550	5	3'-0"	11	STR										
EA553	5	9'-6"	20	12	3'-2"	3'-2"	3'-2"							
EA554	5	8'-9"	25	12	3'-2"	2'-5"	3'-2"							
EA640	6	9'-6"	49	2	4'-0"	5'-6"	2'-2½"							
EA641	6	6'-3"	23	10	1'-0"	5'-3"								
EA642	6	5'-11"	45	15	1'-0"	1'-9"	11"	2'-3"	8½"					
EA643	6	6'-7"	8	15	1'-0"	1'-9"	1'-7"	2'-3"	8½"					
EA644	6	7'-2"	4	STR										
EA645	6	9'-2"	4	STR										
EA646	6	32'-0"	2	STR										
EA647	6	5'-7"	22	10	1'-0"	4'-7"								
EA648	6	22'-3"	2	STR										
EA841	8	21'-6"	47	STR										

ABUTMENT 2

MARK	SIZE	LENGTH	NO.	TYPE	A	B	C	D	E	F	G	H	K	REMARKS
EW440	4	28'-4"	7	STR										
EW441	4	6'-2"	114	STR										
EW442	4	10'-1"	13	38	3'-9¼"	4"	3"	2¾"	1'-4½"	4'-1½"	9½"			
EW443	4	25'-10"	7	STR										
EW444	4	4'-2"	18	STR										
EW540	5	3'-3"	20	STR										
EW640	6	25'-10"	7	STR										
EW940	6	28'-4"	7	STR										
EC441	4	6'-6"	4	30	1'-11½"	4"	4½"	3⅛"	1'-9⅞"	4⅛"	6¾"	5¾"	2¼"	R = 2"
EC442	4	8'-1"	4	30	2'-9½"	4"	3⅜"	3⅛"	2'-7¾"	4⅛"	6¾"	5¾"	3⅜"	R = 2"
EC443	4	11'-2"	13	30	4'-3"	4"	3⅜"	3⅛"	4'-1"	4⅛"	9"	5⅞"	5⅛"	R = 2"
EC541	5	1'-8"	10	STR										
EC542	5	6'-2"	8	STR										
EC641	6	1'-8"	8	STR										
EC642	6	6'-2"	4	STR										

NOTES

- PREFIX E DENOTES EPOXY COATED REINFORCEMENT BARS.
- ALL DIMENSIONS ARE OUT TO OUT OF BAR EXCEPT "A" AND "C" ON STANDARD 135° AND 180° HOOKS, AND "R" WHICH IS SHOWN TO THE INSIDE OF THE BAR.
- FOR REINFORCEMENT BAR FABRICATION DETAILS, REFER TO STANDARD DRAWING BC-736M.
- FIGURES IN CIRCLES SHOW TYPES.

BAR BENDING DIAGRAMS

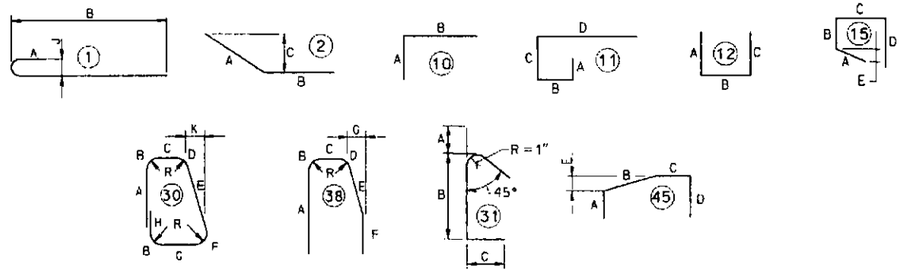

Mark	Description	By	Chk'd.	Recm'd.	Date
REVISIONS					

DESIGNED BY	BGC
DRAWN BY	ERK
CHECKED BY	MP

COMMONWEALTH OF PENNSYLVANIA
DEPARTMENT OF TRANSPORTATION

ARMSTRONG COUNTY
SR 1038 SECTION 150
SEG 0040 OFFSET 1110
SR 1038-150 STA 1956+35.83 AND SR 4025 OVER
BUFFALO AND PITTSBURGH RAILROAD
4 SPAN STEEL MULTI-GIRDER BRIDGE AND
SINGLE SPAN ROLLED BEAM T-SPAN
ABUTMENT 2 REINFORCING BAR SCHEDULE

COMMONWEALTH OF PENNSYLVANIA — PROFESSIONAL ENGINEER — KEITH A. MICHAEL — 30014

RECOMMENDED JUL 8 2010

SHEET 85 OF 97

S-27038

A-00122496

h:\projects\043246\roc\ure\w_311\ranging\r1d1sheets.dgn 1/31/2007

ABUTMENT 3

MARK	SIZE	LENGTH	NO.	TYPE	A	B	C	D	E	F	G	H	K	REMARKS
EA380	3	13'-6"	7	STR										BEND IN FIELD
EA381	3	11'-0"	9	STR										BEND IN FIELD
EA382	3	21'-0"	5	STR										BEND IN FIELD
EA383	3	10'-0"	2	STR										BEND IN FIELD
EA384	3	14'-0"	1	STR										BEND IN FIELD
EA570	5	20'-1"	16	STR										
EA571	5	10'-3"	5	STR										
EA572	5	22'-9"	15	STR										
EA573	5	21'-11"	5	STR										
EA574	5	5'-9"	5	STR										
EA575	5	8'-0"	5	STR										
EA576	5	12'-1"	5	45	2'-0"	3'-7"	2'-3½"	2'-5½"	1'-9"	1'-0½"	1'-8¾"			
EA577	5	8'-8"	8	12	1'-9"	5'-2"	1'-9"							
EA578	5	11'-6"	42	12	3'-2"	5'-2"	3'-2"							
EA579	5	13'-2"	44	12	4'-0"	5'-2"	4'-0"							
EA580	5	9'-7" TO 11'-0"	2	12	3'-7"	2'-5" TO 3'-10"	3'-7"							VARY 1 EA B BY 1'-5"
EA581	5	17'-6"	1	12	6'-2"	5'-2"	6'-2"							
EA582	5	6'-5"	34	12	2'-9"	11"	2'-9"							
EA583	5	3'-7"	2	STR										
EA584	5	5'-4"	2	10	1'-9"	3'-7"								
EA585	5	6'-2"	4	STR										
EA586	5	5'-6"	2	STR										
EA587	5	7'-3"	2	2	5'-6"	1'-9"	1'-1½"							
EA588	5	9'-6"	2	STR										
EA589	5	6'-9"	2	2	5'-0"	1'-9"	2'-4"							
EA590	5	13'-0"	2	2	4'-0"	9'-0"	11"							
EA591	5	4'-6"	2	2	2'-9"	1'-9"	4"							
EA592	5	7'-4"	23	STR										
EA593	5	5'-3"	19	STR										
ED594	5	2'-0"	151	2	6"	1'-6"	5⅞"							ANCHOR DOWELS
EF470	4	14'-10"	11	47	3'-10"	4½"	2'-0"							R = 1'-10½"
EF471	4	16'-2"	27	47	4'-4"	4½"	1'-9"							R = 2'-1½"
EF870	8	29'-3"	25	STR										
EF1070	10	17'-6"	20	STR										
EW470	4	3'-6"	24	STR										
EW471	4	4'-6"	12	STR										
EW555	5	15'-9" TO 18'-1"	3	STR										VARY 1 EA BY 1'-2"
EW556	5	15'-10"	4	STR										
EW557	5	10'-4" TO 12'-5"	10	STR										VARY 2 EA BY 6¼"
EW558	5	6'-7"	9	12	1'-9"	3'-1"	1'-9"							
EW559	5	5'-3" TO 8'-9"	6	STR										VARY 1 EA BY 8½"(-)
EW560	5	5'-7" TO 9'-1"	6	STR										VARY 1 EA BY 8½"(-)
EW561	5	4'-10" TO 7'-11"	6	STR										VARY 1 EA BY 7½"(-)
EW562	5	4'-5"	14	STR										
EW563	5	7'-5" TO 11'-9"	3	2	1'-4" TO 5'-8"	6'-1"	10½" TO 2'-2"							VARY 1 EA A BY 2'-2" C BY 4"
EW564	5	6'-9" TO 11'-1"	3	2	1'-6" TO 5'-10"	5'-3"	6" TO 1'-10"							VARY 1 EA A BY 2'-2" C BY 8"
EW565	5	7'-3" TO 9'-6"	2	2	4'-6"	2'-9" TO 5'-0"	1'-2½"							VARY 1 EA B BY 2'-3"
EW566	5	12'-5"	6	STR										
EW567	5	12'-9"	5	40	1'-9"	5'-3"	5'-9"							
EW568	5	12'-10" TO 14'-6"	5	40	1'-9"	5'-6"	5'-7" TO 7'-3"							VARY EA C BY 5" BEND C IN FIELD
EW569	5	9'-2" TO 10'-10"	5	40	1'-9"	2'-0"	5'-5" TO 7'-1"							VARY EA C BY 5" BEND C IN FIELD
EW570	5	11'-9"	4	STR										
EW571	5	11'-3" TO 14'-4"	3	STR										VARY 1 EA BY 1'-6½"
EW572	5	19'-3"	4	STR										
EW573	5	5'-8"	18	46	1'-9"	2'-2"	1'-9"	1'-0"						
EW574	5	17'-2"	27	STR										
EW575	5	4'-5" TO 5'-9"	6	STR										VARY 2 EA BY 8"
EW576	5	5'-8"	4	2	1'-9"	3'-11"	1'-5⅝"							

ABUTMENT 3

MARK	SIZE	LENGTH	NO.	TYPE	A	B	C	D	E	F	G	H	K	REMARKS
EW577	5	9'-6"	4	2	5'-0"	4'-6"	4'-2"							
EW578	5	9'-8"	4	2	6'-0"	3'-8"	4'-7"							
EW579	5	6'-9"	42	46	1'-9"	3'-3"	1'-9"	1'-6"						
EW580	5	29'-2"	13	STR										
EW581	5	27'-2"	6	STR										
EW582	5	21'-8"	6	STR										
EW583	5	16'-5"	7	STR										
EW584	5	6'-2" TO 15'-6½"	10	STR										VARY 1 EA BY 1'-0½"
EW585	5	15'-5" TO 15'-9"	3	2	1'-9"	13'-8" TO 14'-0"	6"							VARY 1 EA A BY 2"
EW586	5	11'-4½" TO 12'-6"	3	2	5'-7" TO 6'-3"	5'-9½" TO 6'-3"	1'-8½" TO 1'-11"							VARY 1 EA A BY 4" B BY 2¾" C BY 1¼"(-)
EW587	5	18'-10" TO 19'-0"	3	2	1'-9"	17'-1" TO 17'-3"	3¼"							VARY 1 EA B BY 1"
EW588	5	15'-3" TO 15'-9"	38	2	1'-9"	13'-6" TO 14'-0"	6"							VARY 19 EA B BY 6"
EW589	5	10'-10" TO 12'-6"	24	2	5'-3" TO 6'-3"	5'-7" TO 6'-3"	1'-8½" TO 1'-11"							VARY 12 EA A BY 1'-0" B BY 8" C BY 2½"
EW590	5	18'-9" TO 19'-0"	10	2	1'-9"	17'-0" TO 17'-3"	3¼"							VARY 5 EA B BY 3"
EW591	5	7'-11" TO 17'-11"	14	2	1'-9"	6'-2" TO 16'-2"	3¼"							VARY 2 EA B BY 1'-8"
EW592	5	7'-0" TO 12'-0"	6	2	1'-5" TO 5'-9"	5'-7" TO 6'-3"	5½" TO 1'-10½"							VARY 3 EA A BY 4'-4" B BY 8" C BY 1'-5"
EW593	5	4'-10" TO 5'-6"	8	STR										VARY 4 EA BY 8"
EW594	5	12'-2"	2	STR										
EW595	5	17'-6"	4	50	1'-9"	14'-0"	1'-9"	1'-2⅞"						
EW596	5	9'-3"	1	2	3'-6"	5'-9"	1'-11"							
EW597	5	10'-0"	1	2	4'-10"	5'-2"	1'-6"							
EW598	5	10'-3"	1	2	1'-9"	8'-6"	6"							
EW599	5	17'-7"	2	2	4'-7"	13'-0"	1'-4"							
EW770	7	14'-8"	4	10	12'-8"	2'-0"								
EW771	7	14'-3" TO 17'-4"	3	10	12'-3" TO 15'-4"	2'-0"								VARY 1 EA A BY 1'-6½"
EW772	7	22'-2"	4	10	20'-2"	2'-0"								
EW773	7	18'-10"	4	10	16'-10"	2'-0"								
EW774	7	18'-9" TO 21'-1"	3	10	16'-9" TO 19'-1"	2'-0"								VARY 1 EA A BY 1'-2"
EW880	8	35'-2"	13	10	30'-8"	4'-6"								
EW881	8	33'-2"	6	10	28'-8"	4'-6"								
EW882	8	27'-8"	6	10	23'-2"	4'-6"								
EW883	8	22'-5"	7	10	17'-11"	4'-6"								
EW884	8	7'-8" TO 17'-0½"	10	STR										VARY 1 EA BY 1'-0½"
EW980	9	16'-0"	31	10	11'-6"	4'-6"								

NOTES

- PREFIX E DENOTES EPOXY COATED REINFORCEMENT BARS.
- ALL DIMENSIONS ARE OUT TO OUT OF BAR EXCEPT " A" AND "G" ON STANDARD 135° AND 180° HOOKS, AND "R" WHICH IS SHOWN TO THE INSIDE OF THE BAR.
- FOR REINFORCEMENT BAR FABRICATION DETAILS, REFER TO STANDARD DRAWING BC-736M.
- FIGURES IN CIRCLES SHOW TYPES.

Mark	Description	By	Chk'd.	Recm'd.	Date
REVISIONS					

BAR BENDING DIAGRAMS

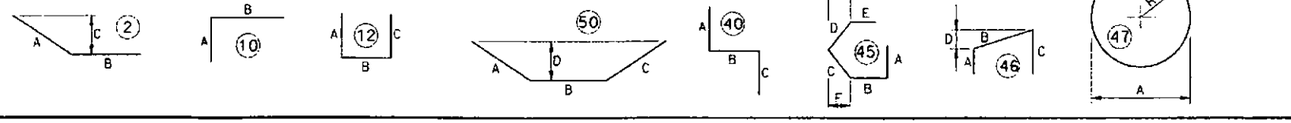

DESIGNED BY	BGC
DRAWN BY	ERK
CHECKED BY	MP

COMMONWEALTH OF PENNSYLVANIA
DEPARTMENT OF TRANSPORTATION

ARMSTRONG COUNTY
SR 1038 SECTION 150

SEG 0040 OFFSET 1110
SR 1038-150 STA 1956+35.83 AND SR 4025 OVER
BUFFALO AND PITTSBURGH RAILROAD
4 SPAN STEEL MULTI-GIRDER BRIDGE AND
SINGLE SPAN ROLLED BEAM T-SPAN
ABUTMENT 3 REINFORCING BAR SCHEDULE

COMMONWEALTH OF PENNSYLVANIA REGISTERED PROFESSIONAL KEITH A. MICHAEL ENGINEER 37884 PENNSYLVANIA

RECOMMENDED JUL 8 [illegible]

SHEET 86 OF 97

S-27038

A-00122496

File: p:\pe\64543246\structure\dgn_Utilitarian.dgn 7/3/2007

DECK

MARK	SIZE	LENGTH	NO.	TYPE	A	B	C	D	E	F	G	H	K	REMARKS
ES301	3	4'-3"	989	STR										BEND IN FIELD
ES302	3	3'-6"	192	STR										BEND IN FIELD
ES303	3	5'-3"	93	STR										BEND IN FIELD
ES401	4	30'-0"	165	STR										
ES402	4	39'-6"	110	STR										
ES403	4	34'-8"	110	STR										
ES404	4	30'-7"	150	STR										
ES405	4	5'-9½"	36	15	1'-0"	1'-5½"	10"	2'-6"	8½"					
ES406	4	6'-5"	552	29	1'-7½"	4"	4"	2'-0"	2¾"	10⅝"	1'-0"	4"		
ES407	4	5'-11½"	582	29	1'-10"	4"	4"	2'-0"	2¾"	10⅝"	1'-0"	-		
ES408	4	4'-8" TO 20'-3"	15	STR										VAR 1-EA BY 13¾"(+)
ES409	4	21'-4" TO 32'-0"	11	STR										VAR 1-EA BY 12¼"(+)
ES410	4	33'-1" TO 39'-6"	7	STR										VAR 1-EA BY 6⅛"(-)
ES411	4	40'-0"	33	STR										
ES412	4	30'-4 TO 36'-6"	5	STR										VAR 1-EA BY 18½"
ES413	4	16'-2" TO 28'-11"	10	STR										VAR 1-EA BY 17
ES414	4	6'-9" TO 14'-7"	6	STR										VAR 1-EA BY 18
ES415	4	6'-10"	1	STR										
ES416	4	5'-9"	36	15	1'-0"	1'-4"	11"	2'-6"	8½"					
ES418	4	4'-3" TO 7'-3"	30	10	9"	3'-6" TO 6'-6"								VAR 2-EA B BY 2½"(+) FIELD BEND B AS REQ'D
ES419	4	17'-0" TO 32'-0"	5	STR										VAR 1-EA BY 3'-9"
ES420	4	4'-8¾"	4	29	1'-10"	4	4	2'-0"	2¾"	8"	-	-		
ES421	4	6'-3"	1	STR										
ES424	4	36'-3"	24	STR										
ES425	4	31'-4"	32	STR										
ES426	4	33'-0"	6	STR										
ES427	4	27'-6"	6	STR										
ES428	4	19'-9"	2	STR										
ES429	4	31'-6"	2	STR										
ES430	4	39'-0"	6	STR										
ES431	4	28'-4"	2	STR										
ES432	4	14'-2"	2	STR										
ES433	4	24'-3"	6	STR										
ES501	5	23'-6"	161	STR										
ES502	5	49'-6"	161	STR										
ES503	5	25'-0"	161	STR										
ES504	5	53'-0"	161	STR										
ES505	5	26'-4"	161	STR										
ES506	5	57'-6"	161	STR										
ES507	5	44'-0"	148	STR										
ES508	5	39'-8"	148	STR										
ES509	5	35'-0"	148	STR										
ES510	5	31'-0"	201	STR										
ES511	5	46'-9"	861	STR										
ES512	5	48'-9"	174	STR										
ES513	5	4'-6" TO 21'-2"	21	STR										VAR 1-EA BY 10"
ES514	5	21'-9" TO 33'-0"	15	STR										VAR 1-EA BY 9⅝"(+)
ES515	5	18'-3" TO 21'-0"	9	STR										VAR 1-EA BY 4⅛"
ES516	5	40'-5"	45	STR										
ES517	5	16'-10" TO 21'-0"	6	STR										VAR 1-EA BY 10"
ES518	5	16'-9" TO 30'-1"	13	STR										VAR 1-EA BY 13⅜"(-)
ES519	5	6'-6" TO 15'-10"	9	STR										VAR 1-EA BY 14"
ES520	5	41'-10" TO 45'-3"	14	STR										VAR 2-EA BY 6⅞"(-)
ES521	5	18'-6" TO 41'-6"	124	STR										VAR 2-EA BY 4½"(+)
ES522	5	54'-0"	2	STR										
ES523	5	43'-9"	2	STR										
ES524	5	6'-6"	2	STR										
ES525	5	6'-0"	2	STR										
ES526	5	5'-0"	165	STR										
ES527	5	18'-4"	4	STR										
ES528	5	52'-1"	28	STR										
ES529	5	6'-10"	1	STR										
ES530	5	50'-4" TO 52'-1"	24	STR										VAR 1-EA BY 1"(-)
ES531	5	6'-3"	1	STR										
ES601	6	49'-6"	54	STR										
ES602	6	24'-0"	54	STR										
ES603	6	53'-0"	54	STR										
ES604	6	25'-6"	54	STR										
ES605	6	57'-6"	54	STR										
ES606	6	26'-10"	54	STR										
ES607	6	51'-9½"	797	4	8"	50'-5½"	8"							
ES608	6	50'-5½"	2	STR										
ES609	6	49'-5"	162	1	8"	48'-9"								
ES610	6	52'-4"	10	STR										
ES611	6	48'-9"	2	STR										

DECK

MARK	SIZE	LENGTH	NO.	TYPE	A	B	C	D	E	F	G	H	K	REMARKS
ES612	6	42'-11" TO 46'-5"	14	1	8"	42'-3" TO 45'-9"								VAR 2-EA 'B' BY 7"
ES613	6	19'-6" TO 42'-6"	114	1	8"	18'-10" TO 41'-10"								VAR 2-EA 'B' BY 5"
ES614	6	19'-2"	8	1	8"	18'-6"								
ES615	6	10'-3"	16	STR										
ES616	6	50'-4" TO 52'-1"	22	STR										VAR 1-EA BY 1"
ES617	6	6'-8"	2	1	8"	6'-0"								
ES618	6	6'-0"	2	STR										
ES619	6	18'-6"	4	STR										
EC401	4	6'-5¼"	552	30	1'-11½"	4"	4½"	3⅝"	1'-9¾"	4⅛"	6¾"	5"	2¼"	R = 2"
EC402	4	8'-0⅛"	586	30	2'-9½"	4"	3⅛"	3⅝"	2'-7¾"	4⅛"	6¾"	5"	3¾"	R = 2"
EC412	4	3'-10"	6	17	2'-1½"	4"	9"	3½"						R = 2"
EC413	4	4'-5"	6	17	2'-1½"	4"	1-4"	3½"						R = 2"
EC414	4	5'-0"	12	17	2'-1½"	4"	1-11"	3½"						R = 2"
EC415	4	5'-8"	24	10	2'-7½"	4"	2'-8½"							R = 2"
EC416	4	7'-7"	3	17	2'-1"	4"	2'-9"	2'-1"						R = 2"
EC417	4	8'-9"	3	17	2'-8"	4"	2'-9"	2'-8"						R = 2"
EC418	4	8'-11½"	21	47	3'-5"	2"	1-9½"	2'-5"						R = 2"
EC501	5	55'-7"	40	STR										
EC502	5	51'-9"	60	STR										
EC503	5	25'-3"	12	STR										
EC601	6	56'-0"	40	STR										
EC602	6	52'-2"	40	STR										
EC603	6	25'-6"	8	STR										

CONCRETE END DIAPHRAGM T-SPAN (ABUT 3)

ED403	4	4'-2"	34	10	2'-1"	2'-1"								
ED404	4	7'-7"	34	15	2'-9"	1'-8"	1'-5"	1'-9"	8½"					
ED601	6	8'-4"	3	STR										
ED602	6	9'-4"	3	STR										
ED603	6	9'-9"	6	STR										
ED604	6	5'-0"	3	STR										
ED605	6	32'-6"	3	STR										

Mark	Description	By	Chk'd.	Recm'd.	Date
REVISIONS					

NOTES

- PREFIX E DENOTES EPOXY COATED REINFORCEMENT BARS.
- ALL DIMENSIONS ARE OUT TO OUT OF BAR EXCEPT " A" AND "G" ON STANDARD 135° AND 180° HOOKS, AND "R" WHICH IS SHOWN TO THE INSIDE OF THE BAR.
- FOR REINFORCEMENT BAR FABRICATION DETAILS, REFER TO STANDARD DRAWING BC-736M.
- FIGURES IN CIRCLES SHOW TYPES.

BAR BENDING DIAGRAMS

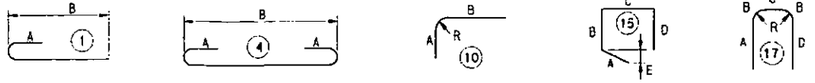

DESIGNED BY	RES
DRAWN BY	GCC
CHECKED BY	PAM

COMMONWEALTH OF PENNSYLVANIA
DEPARTMENT OF TRANSPORTATION

ARMSTRONG COUNTY
SR 1038 SECTION 150
SEG 0040 OFFSET 1110
SR 1038-150 STA 1956+35.83 AND SR 4025 OVER
BUFFALO AND PITTSBURGH RAILROAD
4 SPAN STEEL MULTI-GIRDER BRIDGE AND
SINGLE SPAN ROLLED BEAM T-SPAN
DECK REINFORCEMENT BAR SCHEDULE

RECOMMENDED
NONE

SHEET 87 OF 97

S-27038

A-00122496

COUNTY	DISTRICT
ARMSTRONG	10

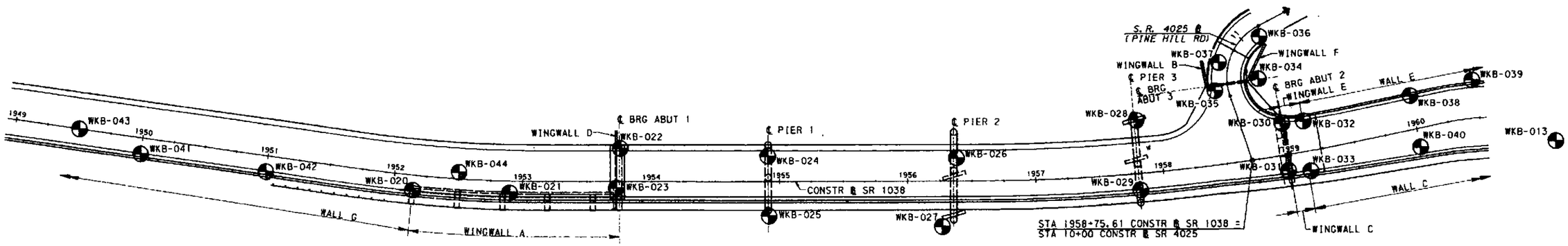

LOCATION PLAN
NOT TO SCALE

LEGEND

WKB-026 BORING FOR FOUNDATION DESIGN

LEGEND	
COLUMN A -	DENOTES DEPTH FOR BOTTOM OF SPOON SAMPLE OR BOTTOM OF CORE RUN IN FEET.
COLUMN B -	DENOTES NUMBER OF BLOWS ON SPOON SAMPLER FOR EVERY 6" OR AS NOTED.
COLUMN C -	DENOTES SPOON SAMPLER OR CORE RECOVERY IN FEET.
COLUMN D -	DENOTES CORE RECOVERY IN PERCENT.
COLUMN E -	DENOTES ROCK QUALITY DESIGNATION (RQD) IN PERCENT.
ELEV. / HR. / DATE	GROUND WATER ELEVATION IN FEET.
GSE	INDICATES EXISTING GROUND SURFACE ELEVATION IN FEET.
TRE	INDICATES TOP OF ROCK ELEVATION IN FEET.
BLE	INDICATES BOTTOM OF LEVELING PAD IN FEET.
TRSE	TOP OF ROCK SOCKET ELEVATION IN FEET.
BRSE	BOTTOM OF ROCK SOCKET ELEVATION IN FEET.

NOTES:

1. THE CORE BORING LOGS AND RELATED INFORMATION DEPICT SUBSURFACE CONDITIONS ONLY AT THE SPECIFIC LOCATIONS AND DATES INDICATED. SOIL AND ROCK CONDITIONS AND GROUNDWATER LEVELS AT OTHER LOCATIONS MAY DIFFER FROM THE CONDITIONS OCCURRING AT THESE BORING LOCATIONS. ALSO, THE PASSAGE OF TIME MAY RESULT IN A CHANGE OF THE CONDITIONS AT THESE BORING LOCATIONS.
2. THIS SHEET IS INCLUDED FOR THE CONVENIENCE OF THE DEPARTMENT AND IS NOT A PART OF THE CONTRACT DRAWINGS. (SEE PUBLICATION 408/2000, SECTION 102.05).
3. THE CLASSIFICATIONS OF THE MATERIALS ENCOUNTERED HAVE BEEN VERIFIED. RAF

5 0 5 FEET
VERTICAL SCALE

THE INFORMATION SUBMITTED REPRESENTS THE CONDITIONS ENCOUNTERED BY THE TEST BORING PROGRAM, INCLUDING LOGS, SOIL SAMPLES, BORING ROCK CORES, CLASSIFICATION OF MATERIALS AND DEPTH OF BORINGS.

Roger A. Fairbank 7/3/07
(GEOTECHNICAL ENGINEER/ENGINEERING GEOLOGIST)

PREPARED BY:
AWK CONSULTING ENGINEERS, INC.
PITTSBURGH, PA 15235

DATE: 7/3/07

COMMONWEALTH OF PENNSYLVANIA
DEPARTMENT OF TRANSPORTATION

ARMSTRONG COUNTY
SR 1038 SECTION 150
SEG 0040 OFFSET 1110
SR 1038-150 STA 1956+35.83 AND SR 4025 OVER BUFFALO AND PITTSBURGH RAILROAD
4 SPAN STEEL MULTI-GIRDER BRIDGE AND SINGLE SPAN ROLLED BEAM T-SPAN
STRUCTURE BORING LOGS

RECOMMENDED

SHEET 88 OF 97
S-27038

DRAWN BY: MEL	DATE: 06-25-07	CHK'D BY: MCM	DATE: 06-25-07	APR'D BY: RAF	DATE: 06-25-07

G:\P\EC0516010\WestKittanningBridge\PS&E_SUB 1\EC0516010_B_PL01.dgn
1:56:17 PM
7/3/2007

A-00122496

COUNTY	DISTRICT
ARMSTRONG	10

ABUTMENT 1

WINGWALL D

WKB-022
STA 1953+76, 25.67 lt
ELEVATION 888.5

G.S.E. 888.5

A	B	C	D	E	DESCRIPTION	
					Asphalt.	888.5
					Concrete.	887.9
3.0	7-8-14	0.8			GRAVEL, sandy; gray; wet;	887.0
4.5	38-27-21	1.0			dense to very dense.	884.0
TRE 884.0						
7.5		3.0	100	20	SANDSTONE, silty (interbedded); gray; hard; fresh; very intensely bedded; closely fractured. Stratum RQD=57%	
12.5		5.0	100	60		
BFE 871.0 ABUT 1 & WING D						
17.5		4.8	97	76		871.0
22.5		5.0	100	78	SANDSTONE, silty (interbedded); gray; hard; slightly weathered; very intensely bedded; closely fractured. Stratum RQD=84%	
						864.2
27.5		5.0	100	100	SILTSTONE, sandy; dark gray; medium; slightly weathered; very intensely bedded; closely fractured. Stratum RQD=100%	863.0
32.5		5.0	100	100	SILTSTONE; dark gray; hard; fresh; thinly bedded; medium to widely fractured. Stratum RQD=100%	
37.5		5.0	100	100		
42.5		5.0	100	100		
47.5		5.0	100	100		
						840.4
					COAL; black; soft.	837.2
52.5		3.5	70	32	CLAYSTONE; gray; soft; moderately weathered; thinly bedded; closely fractured. Slickensides on fractures Stratum RQD=74%	
57.5		5.0	100	84		
						830.2
62.5		3.8	75	76	SANDSTONE, clayey; gray; medium; fresh; thinly bedded; medium fractured. Stratum RQD=90%	826.0

No Water Reading Taken — Bottom of hole.

WINGWALL A

WKB-023
STA 1953+73, 5.07' rt
ELEVATION 879.4

G.S.E. 879.4

A	B	C	D	E	DESCRIPTION	
1.5	3-4-4	0.4			SAND, gravelly; brown; moist;	
3.0	4-3-6	0.5			medium dense.	
3.9	3-50/.4	0.3				875.5
TRE 875.5						
6.0		1.8	84	0	SANDSTONE, silty (interbedded); gray; hard; moderately weathered; very intensely bedded; very closely fractured. Stratum RQD=5%	
BFE 871.0 ABUT 1 & WING D						
11.0		5.0	100	0		
TRSE 864.9 WING A, SHAFT C5						
TRSE 864.9 ABUT 1 SHAFT						864.9
16.0		4.3	65	20	SILTSTONE, sandy (interbedded); dark gray; hard; slightly weathered; very intensely bedded; closely fractured. Stratum RQD=60%	860.9
BRSE 857.9 ABUT 1 SHAFT						
21.0		5.0	100	80	SILTSTONE; dark gray; medium; fresh; intensely bedded; very closely to closely fractured. Stratum RQD=66%	
26.0		5.0	100	38		
31.0		4.8	97	90		
BRSE 845.9 WING A, SHAFT C5						
36.0		4.4	88	54		
						842.6
					COAL; black; soft. Stratum RQD=0%	838.8
41.0		5.0	100	16	CLAYSTONE, sandy; gray; soft; highly weathered; intensely bedded; very closely fractured. Stratum RQD=22%	836.1
46.0		5.0	100	66	SANDSTONE, fine grained; gray; hard; fresh; intensely bedded; medium fractured. Stratum RQD=51%	
ELEV 829.9 0 HRS. 4/06/06						
51.0		5.0	100	24		828.4

No 24 HR Water Reading Taken — Bottom of hole.

ELEVATION, FEET

LEGEND

COLUMN A - DENOTES DEPTH FOR BOTTOM OF SPOON SAMPLE OR BOTTOM OF CORE RUN IN FEET.
COLUMN B - DENOTES NUMBER OF BLOWS ON SPOON SAMPLER FOR EVERY 6" OR AS NOTED.
COLUMN C - DENOTES SPOON SAMPLER OR CORE RECOVERY IN FEET.
COLUMN D - DENOTES CORE RECOVERY IN PERCENT.
COLUMN E - DENOTES ROCK QUALITY DESIGNATION (RQD) IN PERCENT.

ELEV. / HR. / DATE — GROUND WATER ELEVATION IN FEET.

GSE INDICATES EXISTING GROUND SURFACE ELEVATION IN FEET.
TRE INDICATES TOP OF ROCK ELEVATION IN FEET.
BFE INDICATES BOTTOM OF FOOTING ELEVATION IN FEET.
TRSE TOP OF ROCK SOCKET ELEVATION IN FEET.
BRSE BOTTOM OF ROCK SOCKET ELEVATION IN FEET.

NOTES:

1. THE CORE BORING LOGS AND RELATED INFORMATION DEPICT SUBSURFACE CONDITIONS ONLY AT THE SPECIFIC LOCATIONS AND DATES INDICATED. SOIL AND ROCK CONDITIONS AND GROUNDWATER LEVELS AT OTHER LOCATIONS MAY DIFFER FROM THE CONDITIONS OCCURRING AT THESE BORING LOCATIONS. ALSO, THE PASSAGE OF TIME MAY RESULT IN A CHANGE OF THE CONDITIONS AT THESE BORING LOCATIONS.
2. THIS SHEET IS INCLUDED FOR THE CONVENIENCE OF THE DEPARTMENT AND IS NOT A PART OF THE CONTRACT DRAWINGS. (SEE PUBLICATION 408/2000, SECTION 102.05).
3. THE CLASSIFICATIONS OF THE MATERIALS ENCOUNTERED HAVE BEEN VERIFIED. RAF

5 0 5 FEET
VERTICAL SCALE

DRAWN BY: MEL	DATE: 06-25-07	CHK'D BY: MCM	DATE: 06-25-07	APR'D BY: RAF	DATE: 06-25-07

PREPARED BY:
AWK CONSULTING ENGINEERS, INC.
PITTSBURGH, PA 15235

DATE: 7/3/07

COMMONWEALTH OF PENNSYLVANIA
DEPARTMENT OF TRANSPORTATION

ARMSTRONG COUNTY
SR 1038 SECTION 150
SEG 0040 OFFSET 1110
SR 1038-150 STA 1956+35.83 AND SR 4025 OVER BUFFALO AND PITTSBURGH RAILROAD
4 SPAN STEEL MULTI-GIRDER BRIDGE AND SINGLE SPAN ROLLED BEAM T-SPAN
STRUCTURE BORING LOGS

RECOMMENDED _____

SHEET 89 OF 97
S-27038

A-00122496

G:\PE\CO516\01\WestKittanningBridge\PS&E_SUB\NEC0516001_B_SL02.dgn
7/3/2007 12:24:23 PM

WINGWALL A

COUNTY	DISTRICT
ARMSTRONG	10

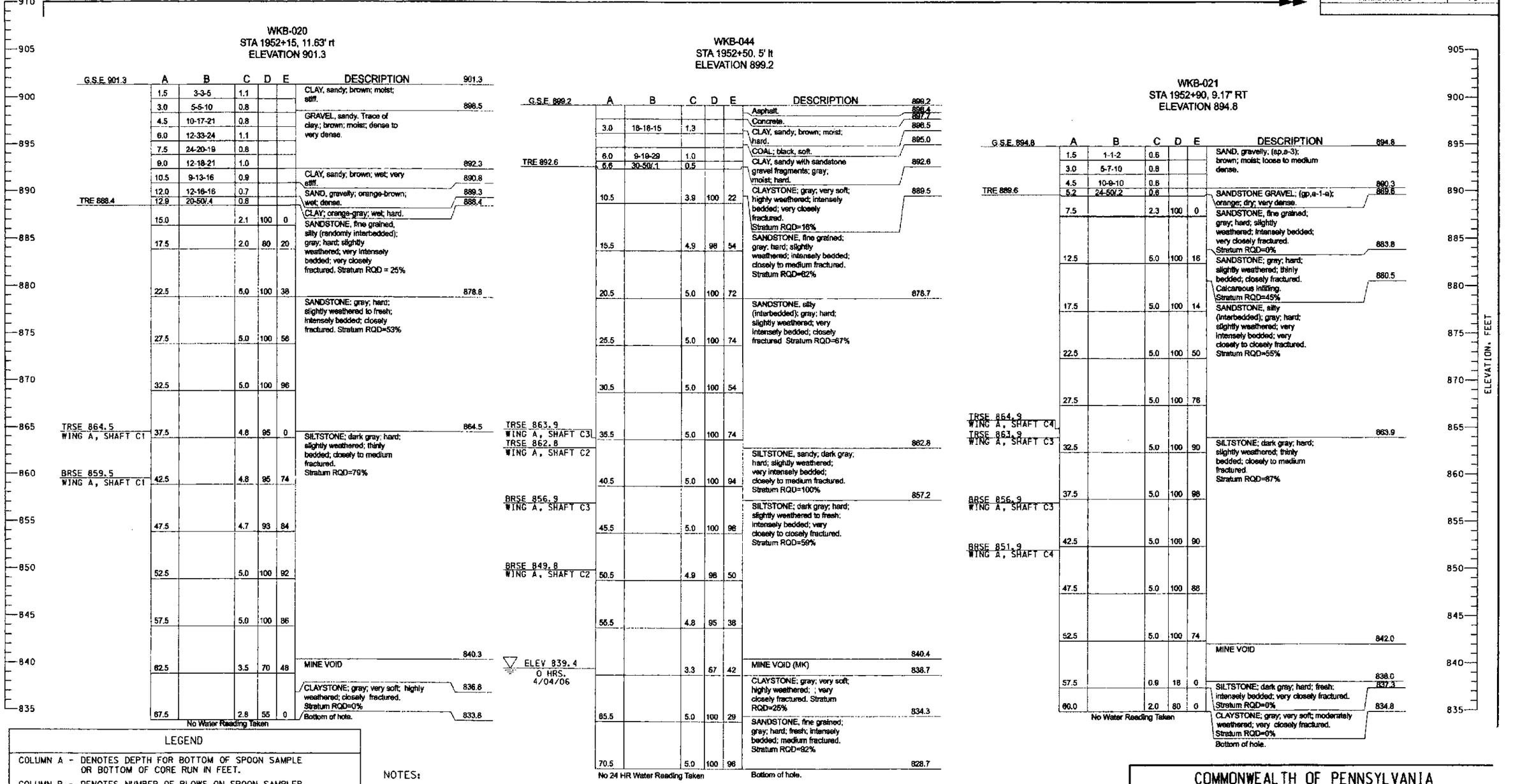

WKB-020
STA 1952+15, 11.63' rt
ELEVATION 901.3

G.S.E. 901.3

A	B	C	D	E	DESCRIPTION	
						901.3
1.5	3-3-5	1.1			CLAY, sandy; brown; moist; stiff.	
3.0	5-5-10	0.8				898.5
4.5	10-17-21	0.8			GRAVEL, sandy. Trace of clay; brown; moist; dense to very dense.	
6.0	12-33-24	1.1				
7.5	24-20-19	0.8				
9.0	12-18-21	1.0				892.3
10.5	9-13-16	0.9			CLAY, sandy; brown; wet; very stiff.	890.8
12.0	12-16-16	0.7			SAND, gravelly; orange-brown; wet; dense.	889.3
12.9	20-50/.4	0.8			CLAY; orange-gray; wet; hard.	888.4
15.0		2.1	100	0	SANDSTONE, fine grained, silty (randomly interbedded); gray; hard; slightly weathered; very intensely bedded; very closely fractured. Stratum RQD = 25%	
17.5		2.0	80	20		
22.5		5.0	100	38		878.8
27.5		5.0	100	56	SANDSTONE: grey; hard; slightly weathered to fresh; intensely bedded; closely fractured. Stratum RQD=53%	
32.5		5.0	100	96		
37.5		4.8	95	0		864.5
42.5		4.8	95	74	SILTSTONE; dark gray; hard; slightly weathered; thinly bedded; closely to medium fractured. Stratum RQD=79%	
47.5		4.7	93	84		
52.5		5.0	100	92		
57.5		5.0	100	86		
62.5		3.5	70	48		840.3
					MINE VOID	
67.5		2.8	55	0	CLAYSTONE; gray; very soft; highly weathered; closely fractured. Stratum RQD=0%	836.8
					Bottom of hole.	833.8

TRE 888.4
TRSE 864.5
WING A, SHAFT C1
BRSE 859.5
WING A, SHAFT C1

No Water Reading Taken

WKB-044
STA 1952+50, 5' lt
ELEVATION 899.2

G.S.E. 899.2

A	B	C	D	E	DESCRIPTION	
					Asphalt.	899.2
					Concrete.	899.1
3.0	18-18-15	1.3			CLAY, sandy; brown; moist; hard.	898.5
6.0	9-19-29	1.0			COAL; black, soft.	895.0
6.6	30-50/.1	0.5			CLAY, sandy with sandstone gravel fragments; gray; moist; hard.	892.6
10.5		3.9	100	22	CLAYSTONE; gray; very soft; highly weathered; intensely bedded; very closely fractured. Stratum RQD=16%	889.5
15.5		4.9	98	54	SANDSTONE, fine grained; gray; hard; slightly weathered; intensely bedded; closely to medium fractured. Stratum RQD=62%	
20.5		5.0	100	72		878.7
25.5		5.0	100	74	SANDSTONE, silty (interbedded); gray; hard; slightly weathered; very intensely bedded; closely fractured Stratum RQD=67%	
30.5		5.0	100	54		
35.5		5.0	100	74		
40.5		5.0	100	94		862.8
45.5		5.0	100	98	SILTSTONE, sandy; dark gray; hard; slightly weathered; very intensely bedded; closely to medium fractured. Stratum RQD=100%	857.2
50.5		4.9	98	50	SILTSTONE; dark gray; hard; slightly weathered to fresh; intensely bedded; very closely to closely fractured. Stratum RQD=59%	
55.5		4.8	95	38		
60.5		3.3	67	42		840.4
					MINE VOID (MK)	838.7
65.5		5.0	100	29	CLAYSTONE; gray; very soft; highly weathered; ; very closely fractured. Stratum RQD=25%	834.3
70.5		5.0	100	96	SANDSTONE, fine grained; gray; hard; fresh; intensely bedded; medium fractured. Stratum RQD=92%	828.7
					Bottom of hole.	

TRE 892.6
TRSE 863.9
WING A, SHAFT C3
TRSE 862.8
WING A, SHAFT C2
BRSE 856.9
WING A, SHAFT C3
BRSE 849.8
WING A, SHAFT C2

ELEV 839.4
0 HRS.
4/04/06

No 24 HR Water Reading Taken

WKB-021
STA 1952+90, 9.17' RT
ELEVATION 894.8

G.S.E. 894.8

A	B	C	D	E	DESCRIPTION	
						894.8
1.5	1-1-2	0.6			SAND, gravelly; (sp,a-3); brown; moist; loose to medium dense.	
3.0	5-7-10	0.8				
4.5	10-9-10	0.8				890.3
5.2	24-50/.2	0.8			SANDSTONE GRAVEL; (gp,a-1-a); orange; dry; very dense.	889.6
7.5		2.3	100	0	SANDSTONE, fine grained; gray; hard; slightly weathered; intensely bedded; very closely fractured. Stratum RQD=0%	883.8
12.5		5.0	100	16	SANDSTONE; gray; hard; slightly weathered; thinly bedded; closely fractured. Calcareous infilling. Stratum RQD=45%	880.5
17.5		5.0	100	14	SANDSTONE, silty (interbedded); gray; hard; slightly weathered; very intensely bedded; very closely to closely fractured. Stratum RQD=55%	
22.5		5.0	100	50		
27.5		5.0	100	76		
32.5		5.0	100	90	SILTSTONE; dark gray; hard; slightly weathered; thinly bedded; closely to medium fractured. Stratum RQD=87%	863.9
37.5		5.0	100	98		
42.5		5.0	100	90		
47.5		5.0	100	88		
52.5		5.0	100	74		842.0
					MINE VOID	838.0
57.5		0.9	18	0	SILTSTONE; dark gray; hard; fresh; intensely bedded; very closely fractured. Stratum RQD=0%	837.3
60.0		2.0	80	0	CLAYSTONE; gray; very soft; moderately weathered; very closely fractured. Stratum RQD=0%	834.8
					Bottom of hole.	

TRE 889.6
TRSE 864.9
WING A, SHAFT C4
TRSE 863.9
WING A, SHAFT C3
BRSE 856.9
WING A, SHAFT C3
BRSE 851.9
WING A, SHAFT C4

No Water Reading Taken

LEGEND

COLUMN A - DENOTES DEPTH FOR BOTTOM OF SPOON SAMPLE OR BOTTOM OF CORE RUN IN FEET.
COLUMN B - DENOTES NUMBER OF BLOWS ON SPOON SAMPLER FOR EVERY 6" OR AS NOTED.
COLUMN C - DENOTES SPOON SAMPLER OR CORE RECOVERY IN FEET.
COLUMN D - DENOTES CORE RECOVERY IN PERCENT.
COLUMN E - DENOTES ROCK QUALITY DESIGNATION (RQD) IN PERCENT.

▼ ELEV. / HR. / DATE — GROUND WATER ELEVATION IN FEET.

GSE INDICATES EXISTING GROUND SURFACE ELEVATION IN FEET.
TRE INDICATES TOP OF ROCK ELEVATION IN FEET.
BFE INDICATES BOTTOM OF FOOTING ELEVATION IN FEET.
TRSE TOP OF ROCK SOCKET ELEVATION IN FEET.
BRSE BOTTOM OF ROCK SOCKET ELEVATION IN FEET.

NOTES:

1. THE CORE BORING LOGS AND RELATED INFORMATION DEPICT SUBSURFACE CONDITIONS ONLY AT THE SPECIFIC LOCATIONS AND DATES INDICATED. SOIL AND ROCK CONDITIONS AND GROUNDWATER LEVELS AT OTHER LOCATIONS MAY DIFFER FROM THE CONDITIONS OCCURRING AT THESE BORING LOCATIONS. ALSO, THE PASSAGE OF TIME MAY RESULT IN A CHANGE OF THE CONDITIONS AT THESE BORING LOCATIONS.
2. THIS SHEET IS INCLUDED FOR THE CONVENIENCE OF THE DEPARTMENT AND IS NOT A PART OF THE CONTRACT DRAWINGS. (SEE PUBLICATION 408/2000, SECTION 102.05).
3. THE CLASSIFICATIONS OF THE MATERIALS ENCOUNTERED HAVE BEEN VERIFIED. RAF

5 0 5 FEET
VERTICAL SCALE

DRAWN BY: MEL	DATE: 06-25-07	CHK'D BY: MCM	DATE: 06-25-07	APR'D BY: RAF	DATE: 06-25-07

PREPARED BY:
AWK CONSULTING ENGINEERS, INC.
PITTSBURGH, PA 15235

DATE: 7/3/07

COMMONWEALTH OF PENNSYLVANIA
REGISTERED PROFESSIONAL
ROGER V. FAIRBANK
GEOLOGIST
No. PS-000781-E

COMMONWEALTH OF PENNSYLVANIA
DEPARTMENT OF TRANSPORTATION

ARMSTRONG COUNTY
SR 1038 SECTION 150
SEG 0040 OFFSET 1110
SR 1038-150 STA 1956+35.83 AND SR 4025 OVER BUFFALO AND PITTSBURGH RAILROAD
4 SPAN STEEL MULTI-GIRDER BRIDGE AND SINGLE SPAN ROLLED BEAM T-SPAN
STRUCTURE BORING LOGS

RECOMMENDED _____

SHEET 90 OF 97
S-27038

A-00122496

G:\PE\EC05160100\WestKittanningBridge\PS&E_SUB\EC05160100_B_SL01.dgn
7/3/2007 12:23:40 PM

COUNTY	DISTRICT
ARMSTRONG	10

PIER 1

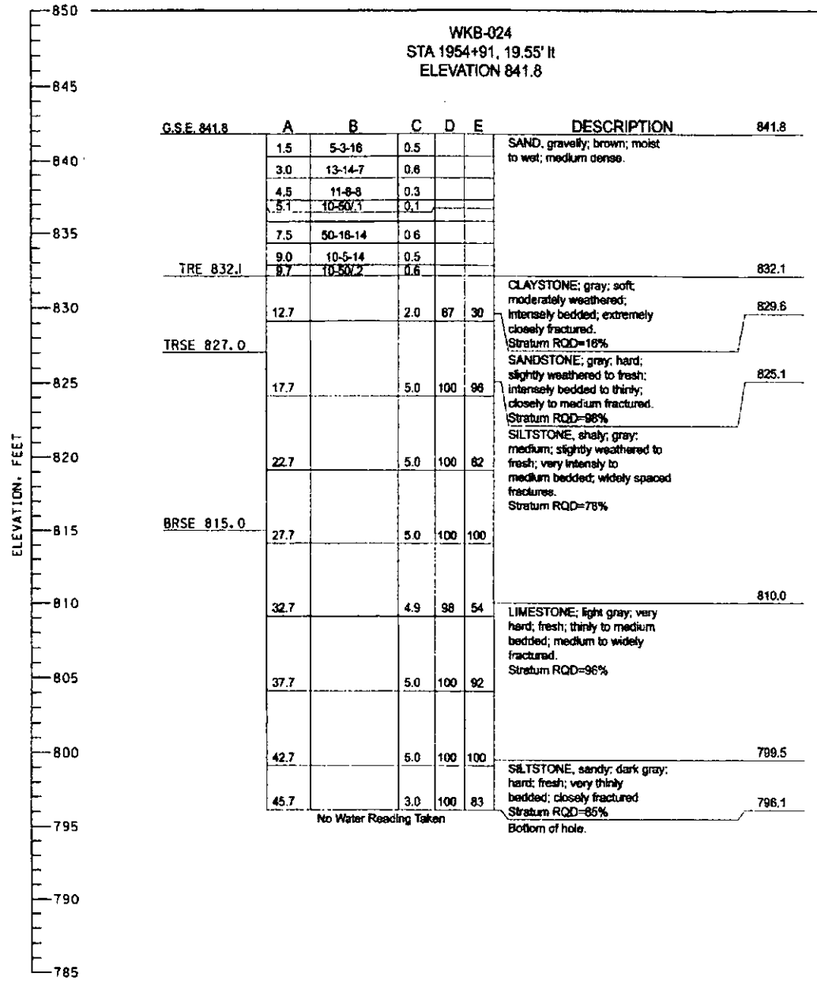

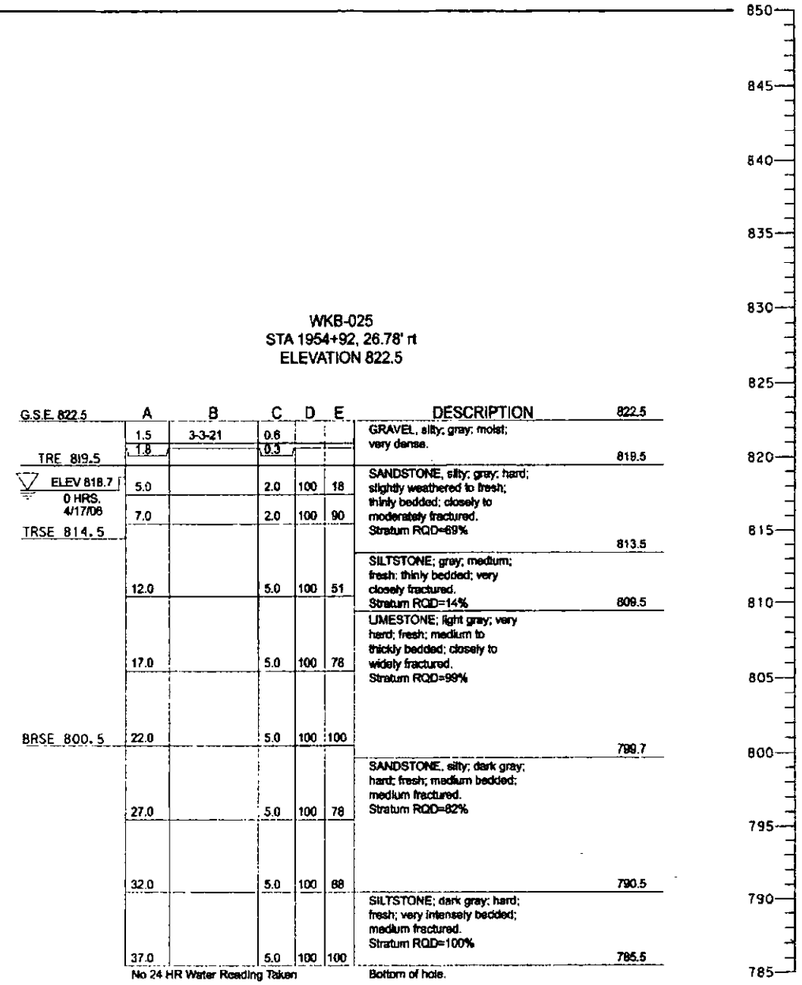

LEGEND	
COLUMN A -	DENOTES DEPTH FOR BOTTOM OF SPOON SAMPLE OR BOTTOM OF CORE RUN IN FEET.
COLUMN B -	DENOTES NUMBER OF BLOWS ON SPOON SAMPLER FOR EVERY 6" OR AS NOTED.
COLUMN C -	DENOTES SPOON SAMPLER OR CORE RECOVERY IN FEET.
COLUMN D -	DENOTES CORE RECOVERY IN PERCENT.
COLUMN E -	DENOTES ROCK QUALITY DESIGNATION (RQD) IN PERCENT.
ELEV. / HR. / DATE	GROUND WATER ELEVATION IN FEET.
GSE	INDICATES EXISTING GROUND SURFACE ELEVATION IN FEET.
TRE	INDICATES TOP OF ROCK ELEVATION IN FEET.
BFE	INDICATES BOTTOM OF FOOTING ELEVATION IN FEET.
TRSE	TOP OF ROCK SOCKET ELEVATION IN FEET.
BRSE	BOTTOM OF ROCK SOCKET ELEVATION IN FEET.

NOTES:

1. THE CORE BORING LOGS AND RELATED INFORMATION DEPICT SUBSURFACE CONDITIONS ONLY AT THE SPECIFIC LOCATIONS AND DATES INDICATED. SOIL AND ROCK CONDITIONS AND GROUNDWATER LEVELS AT OTHER LOCATIONS MAY DIFFER FROM THE CONDITIONS OCCURRING AT THESE BORING LOCATIONS. ALSO, THE PASSAGE OF TIME MAY RESULT IN A CHANGE OF THE CONDITIONS AT THESE BORING LOCATIONS.
2. THIS SHEET IS INCLUDED FOR THE CONVENIENCE OF THE DEPARTMENT AND IS NOT A PART OF THE CONTRACT DRAWINGS. (SEE PUBLICATION 408/2000, SECTION 102.05).
3. THE CLASSIFICATIONS OF THE MATERIALS ENCOUNTERED HAVE BEEN VERIFIED. RAF

5 0 5 FEET
VERTICAL SCALE

DRAWN BY: MEL	DATE: 06-25-07	CHK'D BY: MCM	DATE: 06-25-07	APR'D BY: RAF	DATE: 06-25-07

PREPARED BY:
AWK CONSULTING ENGINEERS, INC.
PITTSBURGH, PA 15235

DATE: 7/3/07

COMMONWEALTH OF PENNSYLVANIA
REGISTERED PROFESSIONAL
ROGER A. FAIRBANK
GEOLOGIST
No. PG-000701-G

COMMONWEALTH OF PENNSYLVANIA
DEPARTMENT OF TRANSPORTATION

ARMSTRONG COUNTY
SR 1038 SECTION 150
SEG 0040 OFFSET 1110
SR 1038-150 STA 1956+35.83 AND SR 4025 OVER BUFFALO AND PITTSBURGH RAILROAD
4 SPAN STEEL MULTI-GIRDER BRIDGE AND SINGLE SPAN ROLLED BEAM T-SPAN
STRUCTURE BORING LOGS

RECOMMENDED _____

SHEET 91 OF 97
S-27038

A-00122496

G:\P\EC05160101\Westkittanning Bridge\PS&E_SUB\PS&E_SUB_INECOS160101_B_SL03.dgn
12:29:08 PM
7/3/2007

PIER 2

COUNTY	DISTRICT
ARMSTRONG	10

WKB-026
STA 1956+38, 17.81' lt
ELEVATION 836.6

G.S.E. 836.6	A	B	C	D	E	DESCRIPTION	
	1.5	7-2-2	0.4			SAND, gravelly; dark brown; moist; loose to medium dense.	836.6
	3.0	19-20-10	1.3				
	4.5	6-11-10	0.8				832.5
	6.0	7-10-31	1.5			SAND, clayey and gravel; light brown; moist; medium dense.	831.7
	6.7	22-50/.2	0.5				830.6
TRE 828.0	8.6	10-49-50/.1	0.6			COAL; dense; black	828.0
						CLAY; gray; moist; hard.	
	11.9		2.7	80	15	CLAYSTONE; gray; soft; highly weathered; very closely fractured. Stratum RQD=13%	824.0
						COAL; black; soft. (Rec=0.3') Stratum RQD=0%	822.2
	17.0		3.5	70	38	SANDSTONE, clayey; gray; hard; slightly weathered; thinly bedded; medium fractured. Stratum RQD=83%	819.9
TRSE 818.5							818.5
	22.0		5.0	100	60	CLAYSTONE; gray; hard; slightly weathered; thinly bedded; closely fractured. Stratum RQD=50%	813.4
	27.0		5.0	100	100	SANDSTONE; gray; hard; slightly weathered to fresh; thinly bedded; closely to medium fractured. Stratum RQD=69%	808.0
BRSE 806.5							
	32.0		5.0	100	92	SILTSTONE, sandy; gray; hard; fresh; intensely bedded; closely to medium fractured. Stratum RQD=96%	
	37.0		5.0	100	96	LIMESTONE; light gray; very hard; slightly weathered; medium bedded; medium to widely fractured. Stratum RQD=96%	
							796.9
	42.0		5.0	100	100	SILTSTONE, sandy; dark gray; hard; fresh; thinly bedded; medium fractured. Stratum RQD=100%	
	45.0		3.0	100	100		791.6

No Water Reading Taken — Bottom of hole.

WKB-027
STA 1956+27, 35.75' RT
ELEVATION 822.6

G.S.E. 822.6	A	B	C	D	E	DESCRIPTION	
ELEV 817.6 0 HRS. 3/17/06	1.5	29-18-15	0.8			SAND, gravelly, (sm,a-1-b); brown; dry; dense.	822.6
	3.0	29-10-6	0.4				
	4.5	4-6-7	0.6				
TRE 816.9	5.7	10-13-50/.2	0.8				
	6.0		0.3	75	0	Coal	816.2
							815.9
	8.0		1.0	50	0	CLAY, sandy; (cl,a-6); gray; moist; hard.	815.8
						CLAYSTONE; brown; very soft; completely-highly weathered; intensely bedded; very closely fractured. Stratum RQD=0%	
	11.0		0.0	0	0		811.6
	11.8	10-50/.3	0.4				810.8
	13.8		0.5	25	0	SILTSTONE, sandy; gray; medium; moderately weathered; intensely bedded; very closely fractured. Stratum RQD=0%	807.0
	15.8		1.4	71	0		
	17.8		0.0	0	0		804.8
	19.3	2-2-21	0.8			SAND, gravelly; (gm,a-1-b); gray; very dense.	
	20.8	42-17-7	0.3			SILTSTONE, clayey; gray; medium; moderately weathered; intensely bedded; very closely fractured.	801.8
	20.6	50/.0	0.0				
	22.8		1.1	54	40		
	24.8		1.0	50	30	clay layer (no recovery)	
						SAND, gravelly; (gm,a-1-b), brown; wet, medium dense.	
TRSE 793.0	29.8		2.8	57	48	LIMESTONE; gray; very hard; slightly weathered-fresh; thinly- medium bedded; medium fractured. Stratum RQD=42%	793.7
							791.5
	34.8		5.0	100	74	SANDSTONE; dark gray; medium to hard; fresh; intensely bedded; closely fractured. Stratum RQD=18%	
BRSE 782.5	39.8			0	100	SANDSTONE,silty, shaly; gray; hard; fresh; intensly bedded; medium-widely fractured. Stratum RQD=95%	
							779.1
	44.8		5.0	100	62	SILTSTONE, sandy; dark gray; hard; slightly weathered; thinly bedded; extremely closely-medium fractured. Stratum RQD=46%	774.5
	49.8		5.0	100	76	SANDSTONE, shaly, interbedded with siltstone; gray; hard; fresh; intensely-thinly bedded; widely fractured. Stratum RQD=100%	
	54.8		4.9	98	100		767.8

No 24 HR Water Reading Taken — Bottom of Hole.

ELEVATION, FEET: 845, 840, 835, 830, 825, 820, 815, 810, 805, 800, 795, 790, 785, 780, 775, 770, 765

LEGEND

COLUMN A - DENOTES DEPTH FOR BOTTOM OF SPOON SAMPLE OR BOTTOM OF CORE RUN IN FEET.
COLUMN B - DENOTES NUMBER OF BLOWS ON SPOON SAMPLER FOR EVERY 6" OR AS NOTED.
COLUMN C - DENOTES SPOON SAMPLER OR CORE RECOVERY IN FEET.
COLUMN D - DENOTES CORE RECOVERY IN PERCENT.
COLUMN E - DENOTES ROCK QUALITY DESIGNATION (RQD) IN PERCENT.
ELEV. HR. DATE — GROUND WATER ELEVATION IN FEET.
GSE INDICATES EXISTING GROUND SURFACE ELEVATION IN FEET.
TRE INDICATES TOP OF ROCK ELEVATION IN FEET.
BFE INDICATES BOTTOM OF FOOTING ELEVATION IN FEET.
TRSE TOP OF ROCK SOCKET ELEVATION IN FEET.
BRSE BOTTOM OF ROCK SOCKET ELEVATION IN FEET.

NOTES:

1. THE CORE BORING LOGS AND RELATED INFORMATION DEPICT SUBSURFACE CONDITIONS ONLY AT THE SPECIFIC LOCATIONS AND DATES INDICATED. SOIL AND ROCK CONDITIONS AND GROUNDWATER LEVELS AT OTHER LOCATIONS MAY DIFFER FROM THE CONDITIONS OCCURRING AT THESE BORING LOCATIONS. ALSO, THE PASSAGE OF TIME MAY RESULT IN A CHANGE OF THE CONDITIONS AT THESE BORING LOCATIONS.
2. THIS SHEET IS INCLUDED FOR THE CONVENIENCE OF THE DEPARTMENT AND IS NOT A PART OF THE CONTRACT DRAWINGS. (SEE PUBLICATION 408/2000, SECTION 102.05).
3. THE CLASSIFICATIONS OF THE MATERIALS ENCOUNTERED HAVE BEEN VERIFIED. RAF

5 0 5 FEET
VERTICAL SCALE

DRAWN BY: MEL	DATE: 06-25-07	CHK'D BY: MCM	DATE: 06-25-07	APR'D BY: RAF	DATE: 06-25-07

PREPARED BY:
AWK CONSULTING ENGINEERS, INC.
PITTSBURGH, PA 15235

DATE: 7/3/07

COMMONWEALTH OF PENNSYLVANIA
DEPARTMENT OF TRANSPORTATION

ARMSTRONG COUNTY
SR 1038 SECTION 150
SEG 0040 OFFSET 1110
SR 1038-150 STA 1956+35.83 AND SR 4025 OVER BUFFALO AND PITTSBURGH RAILROAD
4 SPAN STEEL MULTI-GIRDER BRIDGE AND SINGLE SPAN ROLLED BEAM T-SPAN
STRUCTURE BORING LOGS

RECOMMENDED _____

SHEET 92 OF 97
S-27038

A-00122496

G:\P\EC0516C0\WestKittanningBridge\PS&E\SUB\EC0516C0IB_SL04.dgn
12:29:47 PM
7/3/2007

PIER 3

COUNTY	DISTRICT
ARMSTRONG	10

WKB-028
STA 1957+82, 41.48' lt
ELEVATION 823.6

G.S.E. 823.6	A	B	C	D	E	DESCRIPTION	
							823.6
TRE 822.0	1.5	1-1-1	0.1			SAND, gravelly; brown; moist; very loose.	822.0
	1.6	50/.1	0.1				
ELEV 820.1	3.6		1.0	50	0	SANDSTONE, silty; gray; hard; slightly weathered; intensely bedded; very closely fractured. Stratum RQD=19%	
0 HRS. 4/17/06							
TRSE 817.0	6.9		1.0	30	0		
							815.0
	12.0		5.0	100	58	SILTSTONE; dark gray; medium; slightly weathered; intensely bedded; closely fractured. Stratum=49%	
							810.1
	17.0		4.5	90	58	LIMESTONE; light gray; very hard; slightly weathered; thinly bedded; closely fractured. Stratum RQD=87%	
BRSE 804.0							
	22.0		5.0	100	100		
							799.4
	27.0		5.0	100	98	SANDSTONE, fine grained; grey; hard; fresh; thinly bedded; medium fractured. Stratum RQD=99%	
	32.0		5.0	100	100		
	37.0		5.0	100	100		786.6

No 24 HR Water Reading Taken — Bottom of hole.

WKB-029
STA 1957+81, 12.67' RT
ELEVATION 855.5

G.S.E. 855.5	A	B	C	D	E	DESCRIPTION	
							855.5
	1.5	2-2-3	0.6			SAND, gravelly; (gm,a-1-b); dark brown; moist; loose.	854.0
	3.0	6-5-9	0.6			SAND, gravelly; (gm,a-1-b); brown; moist; medium-very dense.	
	4.5	17-10-11	0.8				
	6.0	11-11-11	1.0				
	6.9	10-50/.4	0.8				
	8.3	17-50/.3	0.6				
							846.4
	10.5	17-23-41	0.6			GRAVEL, sandy; (gc,a-2-6); dark gray; wet; very dense.	844.8
	11.7	17-15-50/.2	0.5				843.5
	13.5	16-11-9	0.8			SAND, gravelly; (gc,a-2-6); brown; wet; very dense.	842.1
	14.7	16-17-50/.2	0.8			GRAVEL, sandy; (gp,a-1-a); dark gray; wet; medium dense.	840.5
	16.5	37-11-16	1.0			SAND, gravelly; (gc,a-2-6); brown-gray; moist; very dense.	839.4
	17.3	37-50/.1	0.4			GRAVEL, sandy; (gp,a-1-a); dark gray; moist; medium dense.	
	18.7	37-50/.2	0.4				
							834.6
	21.0	16-23-22	0.8			GRAVEL, sandy; (gp,a-1-a); light gray; moist; medium dense.	834.5
	22.5	12-11-8	0.8			GRAVEL, sandy; (gp,a-1-a); brown; wet; dense.	
	23.4	16-50/.4	0.5				
	24.1	50/.1	0.1				
	27.0	10-11-6	0.4			GRAVEL, sandy; (gp,a-1-a); gray; wet; very dense.	828.6
	28.5	6-6-8	1.0			GRAVEL, sandy; (gp,a-1-a); brown; wet; very dense.	828.1
	30.0	7-8-8	0.5			CLAY, sandy; (cl,a-6); gray; wet; stiff.	827.2
	31.5	8-12-12	0.9			CLAY, gravelly; (cl,a-6); dark gray; wet; stiff.	827.0
	33.0	12-12-12	0.9			SAND, gravelly; (gp,a-1-a); dark gray; wet; medium dense.	825.7
	34.5	16-16-10	0.8			SAND, gravelly; (gp,a-1-a); pink; wet; medium dense.	825.4
	36.0	27-27-20	1.3			SAND, gravelly; (gp,a-1-a); dark brown; wet; medium dense.	
	37.5	17-20-25	0.8				816.5
	39.0	16-18-25	0.8			GRAVEL, sandy,silty; (gc,a-2-6); dark brown; wet; medium dense.	
	40.5	16-12-18	0.7				
	42.0	16-16-19	0.8				
	43.5	14-16-19	0.3				
	45.0	14-12-22	0.8				
	45.3	50/.3	0.2				
	48.0	32-27-18	0.5				
	49.5	15-20-25	1.3				
							806.3
	51.0	21-22-24	0.5			CLAY, sandy; (cl,a-6); gray; wet; hard.	805.0
	51.7	27-50/.2				COAL	804.8
TRE 802.8						CLAY, sandy; (cl,a-6); gray; moist; hard.	804.5
	52.6	50/.1	0.0			SAND, gravelly; (gm,a-1-b); gray; moist; very dense.	802.9
	54.6		0.9	46	0		802.8
						SANDSTONE; gray; hard; moderately weathered; very intensely bedded; very closely fractured. Stratum RQD=0%	
	57.6		2.2	72	0		797.9
						LIMESTONE; gray; very hard; slightly weathered; thinly bedded; closely fractured. Stratum RQD=0% Low recovery due to clay being washed out of vertical and horizontal fractures	
TRSE 792.9	62.6		4.4	68	8		
						SILTY SANDSTONE; dark gray; very hard; slightly weathered; intensely bedded; very closely-closely fractured. Stratum RQD=4%	
	67.6		5.0	100	0		787.9

BORING WKB-029 CONTINUED ABOVE

BORING WKB-029 CONTINUED FROM BELOW 787.9

BRSE 782.5						
	72.6		5.0	100	0	SILTSTONE, sandy; dark gray; hard; fresh; intensely bedded; closely fractured. Stratum RQD=9%
						779.7
	77.6		5.0	100	46	SANDSTONE; gray; hard; fresh; intensely-thinly bedded; medium-widely fractured. Stratum RQD=97%
	82.6		4.9	98	98	
	87.6		5.0	100	100	767.9

No Water Reading Taken — Bottom of Hole

ELEVATION, FEET: 860, 855, 850, 845, 840, 835, 830, 825, 820, 815, 810, 805, 800, 795, 790, 785

ELEVATION, FEET: 790, 785, 780, 775, 770, 765

LEGEND

COLUMN A - DENOTES DEPTH FOR BOTTOM OF SPOON SAMPLE OR BOTTOM OF CORE RUN IN FEET.
COLUMN B - DENOTES NUMBER OF BLOWS ON SPOON SAMPLER FOR EVERY 6" OR AS NOTED.
COLUMN C - DENOTES SPOON SAMPLER OR CORE RECOVERY IN FEET.
COLUMN D - DENOTES CORE RECOVERY IN PERCENT.
COLUMN E - DENOTES ROCK QUALITY DESIGNATION (RQD) IN PERCENT.
ELEV. / HR. / DATE — GROUND WATER ELEVATION IN FEET.
GSE INDICATES EXISTING GROUND SURFACE ELEVATION IN FEET.
TRE INDICATES TOP OF ROCK ELEVATION IN FEET.
BFE INDICATES BOTTOM OF FOOTING ELEVATION IN FEET.
TRSE TOP OF ROCK SOCKET ELEVATION IN FEET.
BRSE BOTTOM OF ROCK SOCKET ELEVATION IN FEET.

NOTES:

1. THE CORE BORING LOGS AND RELATED INFORMATION DEPICT SUBSURFACE CONDITIONS ONLY AT THE SPECIFIC LOCATIONS AND DATES INDICATED. SOIL AND ROCK CONDITIONS AND GROUNDWATER LEVELS AT OTHER LOCATIONS MAY DIFFER FROM THE CONDITIONS OCCURRING AT THESE BORING LOCATIONS. ALSO, THE PASSAGE OF TIME MAY RESULT IN A CHANGE OF THE CONDITIONS AT THESE BORING LOCATIONS.
2. THIS SHEET IS INCLUDED FOR THE CONVENIENCE OF THE DEPARTMENT AND IS NOT A PART OF THE CONTRACT DRAWINGS. (SEE PUBLICATION 408/2000, SECTION 102.051).
3. THE CLASSIFICATIONS OF THE MATERIALS ENCOUNTERED HAVE BEEN VERIFIED. RAF

5 0 5 FEET
VERTICAL SCALE

DRAWN BY: MEL	DATE: 06-25-07	CHK'D BY: MCM	DATE: 06-25-07	APR'D BY: RAF	DATE: 06-25-07

PREPARED BY:
AWK CONSULTING ENGINEERS, INC.
PITTSBURGH, PA 15235

DATE: 7/3/07

ROGER C. FAIRBANK — GEOLOGIST — No. PG-000791-E — COMMONWEALTH OF PENNSYLVANIA

COMMONWEALTH OF PENNSYLVANIA
DEPARTMENT OF TRANSPORTATION

ARMSTRONG COUNTY
SR 1038 SECTION 150
SEG 0040 OFFSET 1110
SR 1038-150 STA 1956+35.83 AND SR 4025 OVER BUFFALO AND PITTSBURGH RAILROAD
4 SPAN STEEL MULTI-GIRDER BRIDGE AND SINGLE SPAN ROLLED BEAM T-SPAN
STRUCTURE BORING LOGS

RECOMMENDED _____

SHEET 93 OF 97
S-27038

A-00122496

G:\P\E005I6001West Kittanning Bridge\PS&E.SUB\E005I6001_B_SL05.dgn
12:30:22 PM
7/3/2007

ABUTMENT 2

COUNTY	DISTRICT
ARMSTRONG	10

WINGWALL E

WKB-030
STA 1958+97, 24.73ft
ELEVATION 845.8

G.S.E. 845.8	A	B	C	D	E	DESCRIPTION	
						Asphalt.	845.8
						Concrete (roadway).	845.3
	3.6	10-50/.1	0.4			SAND, gravelly; brown; moist; very dense.	844.3
	6.3	50/.3	0.3				838.8
						CONCRETE.	
	11.0		2.0	100	100		
	16.0		5.0	100	96		
	21.0		5.0	100	80		
BFE 818.93							
ELEV 818.9 24 HRS. 4-12-06	26.0		5.0	100	96		
	31.0		3.8	75	66		815.8
TRE 813.7						Rock fragments and river gravel, clayey with sand; brown.	813.7
	36.0		3.0	80	8	LIMESTONE; light gray; very hard; slightly weathered; thinly bedded; closely fractured. Stratum RQD=41%	
ELEV 807.6 0 HRS. 4/11/06							
	41.0		3.3	67	30		
	46.0		5.0	100	84		801.3
						SILTSTONE, sandy; dark gray; hard; slightly to moderately weathered; intensely bedded; very closely fractured. Stratum RQD=0%	
	51.0		4.4	88	0		794.8
						Bottom of hole.	

WINGWALL C

WKB-031
STA 1958+96, 12.46 rt
ELEVATION 846.0

G.S.E. 846.0	A	B	C	D	E	DESCRIPTION	
	1.5	3-2-3	0.4			Organics with trace CLAY; (cl,a-6); brown; moist; medium stiff.	846.0
	3.0	6-18-8	0.4				844.6
	4.5	17-10-14	0.9			SAND, gravelly; (gm,a-1-b); gray; moist; medium dense.	841.9
	5.8	10-22-50/.3	1.0			SAND, clayey with SS gravel pieces; (gc,a-2-6); brown; moist; very dense.	840.8
	6.9	27-50/.4	0.7				840.0
	8.3	22-50/.3	0.7				839.2
						SAND, gravelly; (gm,a-1-b); gray; wet; very dense.	838.5
	10.5	12-13-12	0.5				
	11.1	31-50/.1	0.5			SAND, gravelly; (gm,a-1-b); gray; wet; very dense.	834.0
	13.5	13-18-19	0.8				
	15.0	8-5-14	0.7			SAND, gravelly; (gm,a-1-b); brown; wet; very dense.	
	16.5	7-14-16	0.7			GRAVEL, sandy; (gm,a-1-b); gray; dry; very dense.	
	18.0	32-14-9	0.8			SAND, gravelly; (gm,a-1-b); brown; wet; medium dense.	828.7
	18.3	50/.3	0.0				828.5
						GRAVEL, sandy; (gm,a-1-b); gray; wet; medium dense.	
	21.0	8-9-50/.0	0.3				
	21.2	50/.2	0.2			GRAVEL, sandy; (gc,a-2-6); brown; wet; very dense.	
	24.0	11-12-17	0.8				823.0
	25.5	8-9-10	0.8			GRAVEL, sandy; (gc,a-2-6); dark gray; wet; medium dense.	822.1
BFE 818.93	27.0	18-16-16	0.8				821.4
	28.5	10-11-7	1.0			GRAVEL, sandy; (gc,a-2-6); brown; wet; medium dense.	821.3
	30.0	9-7-5	0.7			COAL	
	31.5	13-10-11	1.0			GRAVEL, sandy; (gc,a-2-6); brown; wet; medium dense.	
	33.0	14-13-10	0.8				
	33.7	15-50/.2	0.5				
ELEV 810.6 0 HRS. 3/22/06	36.0	16-18-20	0.3				
	37.5	12-30-27	0.7				
	39.0	10-30-40	0.7				807.6
	40.5	6-8-18	0.3			CLAY, gravelly, sandy; (cl,a-6); brown; wet; hard.	804.8
	42.0	18-17-22	1.0				
	43.5	18-22-23	0.2			SAND, gravelly; (gm,a-1-b); light brown; wet; dense.	
	45.0	18-25-16	0.7				
	46.5	12-22-26	0.8				
	48.0	11-13-14	0.2				
	49.5	10-11-13	1.0				
	51.0	13-26-16	0.8				
	52.5	13-17-28	0.3				
	54.0	11-22-17	0.5				
	55.5	10-15-46	0.7				
TRE 790.3	55.7	50/.2	0.2				790.3
	57.0		0.3	26	0	SILTSTONE; gray; medium; slightly weathered; very intensely bedded; extremely closely-very closely fractured. Stratum RQD=0%	784.4
	59.0		0.5	25	0	Boney Coal	784.0
	62.0		2.4	81	0	SANDSTONE; gray, hard; slightly weathered; intensely-thinly bedded; closely-medium fractured. Stratum RQD=78%	778.0
	67.0		5.0	100	76	SANDSTONE interbedded w/ siltstone; gray; hard, fresh; very intensely bedded; medium fractured. Stratum RQD=82%	
	72.0		5.0	100	84		
	77.0		5.0	100	84		769.0
						No 24 HR Water Reading Taken	Bottom of Hole.

ELEVATION, FEET

855 850 845 840 835 830 825 820 815 810 805 800 795 790 785 780 775 770 765

ROCK SOCKET ELEVATIONS

LOCATIONS	BOTTOM-OF-ROCK SOCKET ELEVATION (FEET)		ROCK SOCKET LENGTH (FEET)
ABUTMENT 2 AND WINGWALLS C AND E (10 CAISSONS)	FRONT ROW:	VARIES FROM 788.30 LT TO 765.95 RT	13
	BACK ROW:	VARIES FROM 795.30 LT TO 772.95 RT	6

LEGEND

COLUMN A - DENOTES DEPTH FOR BOTTOM OF SPOON SAMPLE OR BOTTOM OF CORE RUN IN FEET.
COLUMN B - DENOTES NUMBER OF BLOWS ON SPOON SAMPLER FOR EVERY 6" OR AS NOTED.
COLUMN C - DENOTES SPOON SAMPLER OR CORE RECOVERY IN FEET.
COLUMN D - DENOTES CORE RECOVERY IN PERCENT.
COLUMN E - DENOTES ROCK QUALITY DESIGNATION (RQD) IN PERCENT.
ELEV. / HR. / DATE - GROUND WATER ELEVATION IN FEET.

GSE INDICATES EXISTING GROUND SURFACE ELEVATION IN FEET.
TRE INDICATES TOP OF ROCK ELEVATION IN FEET.
BFE INDICATES BOTTOM OF FOOTING ELEVATION IN FEET.
TRSE TOP OF ROCK SOCKET ELEVATION IN FEET.
BRSE BOTTOM OF ROCK SOCKET ELEVATION IN FEET.

5 0 5 FEET
VERTICAL SCALE

NOTES:

1. THE CORE BORING LOGS AND RELATED INFORMATION DEPICT SUBSURFACE CONDITIONS ONLY AT THE SPECIFIC LOCATIONS AND DATES INDICATED. SOIL AND ROCK CONDITIONS AND GROUNDWATER LEVELS AT OTHER LOCATIONS MAY DIFFER FROM THE CONDITIONS OCCURRING AT THESE BORING LOCATIONS. ALSO, THE PASSAGE OF TIME MAY RESULT IN A CHANGE OF THE CONDITIONS AT THESE BORING LOCATIONS.
2. THIS SHEET IS INCLUDED FOR THE CONVENIENCE OF THE DEPARTMENT AND IS NOT A PART OF THE CONTRACT DRAWINGS. (SEE PUBLICATION 408/2000, SECTION 102.05).
3. THE CLASSIFICATIONS OF THE MATERIALS ENCOUNTERED HAVE BEEN VERIFIED. RAF

DRAWN BY: MEL	DATE: 06-25-07	CHK'D BY: MCM	DATE: 06-25-07	APR'D BY: RAF	DATE: 06-25-07

PREPARED BY:
AWK CONSULTING ENGINEERS, INC.
PITTSBURGH, PA 15235

DATE: 7/3/07

COMMONWEALTH OF PENNSYLVANIA
DEPARTMENT OF TRANSPORTATION

ARMSTRONG COUNTY
SR 1038 SECTION 150
SEG 0040 OFFSET 1110
SR 1038-150 STA 1956+35.83 AND SR 4025 OVER BUFFALO AND PITTSBURGH RAILROAD
4 SPAN STEEL MULTI-GIRDER BRIDGE AND SINGLE SPAN ROLLED BEAM T-SPAN
STRUCTURE BORING LOGS

RECOMMENDED _____

SHEET 94 OF 97
S-27038

A-00122496

G:\P\ECO5160101\WestKittanningBridge\PS&E_SUB_I\ECO5160101_B_SL06.dgn
7/3/2007 12:31:07 PM

COUNTY	DISTRICT
ARMSTRONG	10

WINGWALL E

WKB-032
STA 1959+14, 23.49' lt
ELEVATION 844.7

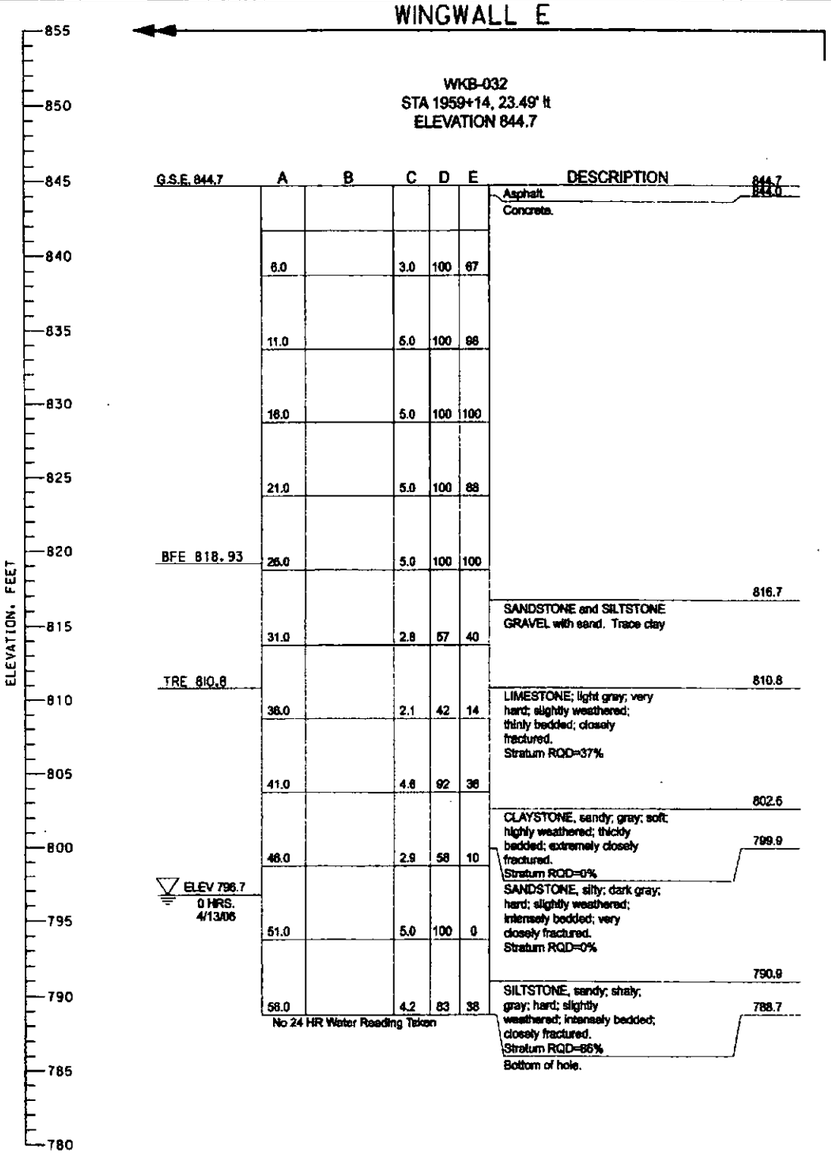

WINGWALL C

WKB-033
STA 1959+13, 15.57' Rt
ELEVATION 842.5

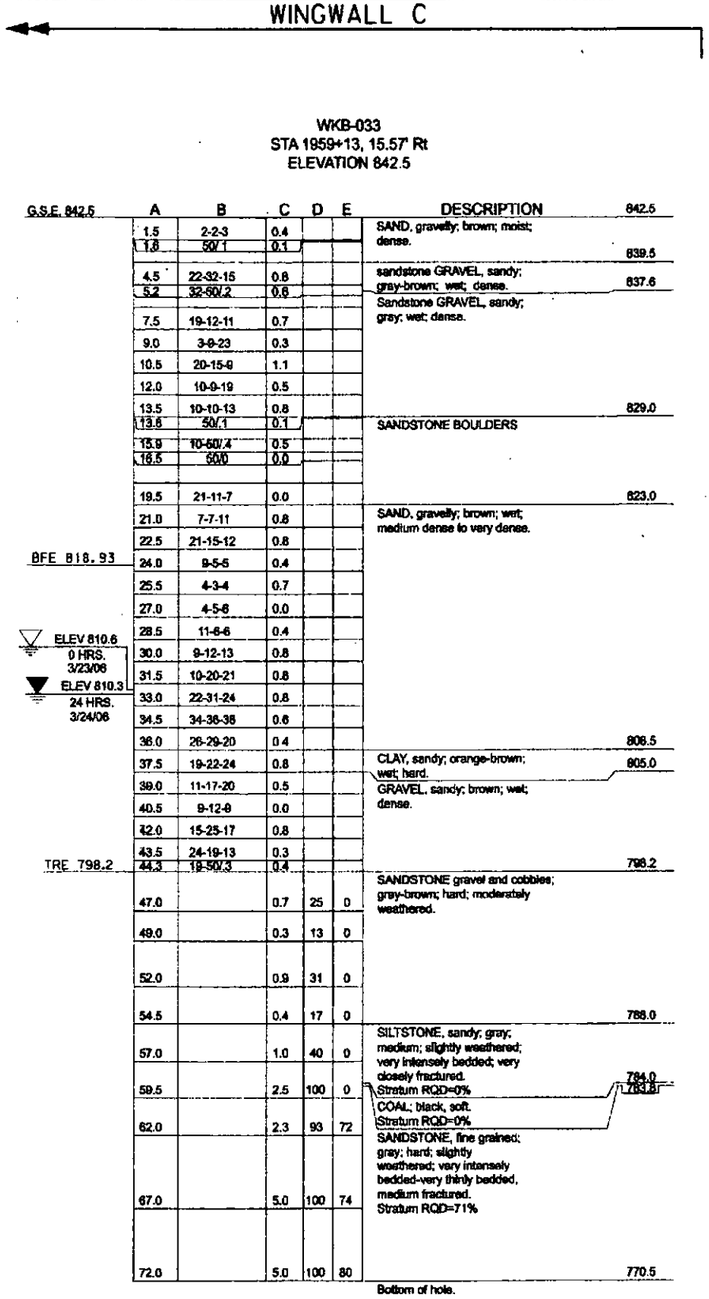

ROCK SOCKET ELEVATIONS

LOCATIONS	BOTTOM-OF-ROCK SOCKET ELEVATION (FEET)		ROCK SOCKET LENGTH (FEET)
ABUTMENT 2 AND WINGWALLS C AND E (10 CAISSONS)	FRONT ROW:	VARIES FROM 788.30 LT TO 765.95 RT	13
	BACK ROW:	VARIES FROM 795.30 LT TO 772.95 RT	6

LEGEND

COLUMN A - DENOTES DEPTH FOR BOTTOM OF SPOON SAMPLE OR BOTTOM OF CORE RUN IN FEET.
COLUMN B - DENOTES NUMBER OF BLOWS ON SPOON SAMPLER FOR EVERY 6" OR AS NOTED.
COLUMN C - DENOTES SPOON SAMPLER OR CORE RECOVERY IN FEET.
COLUMN D - DENOTES CORE RECOVERY IN PERCENT.
COLUMN E - DENOTES ROCK QUALITY DESIGNATION (RQD) IN PERCENT.

ELEV. / HR. / DATE — GROUND WATER ELEVATION IN FEET.

GSE INDICATES EXISTING GROUND SURFACE ELEVATION IN FEET.
TRE INDICATES TOP OF ROCK ELEVATION IN FEET.
BFE INDICATES BOTTOM OF FOOTING ELEVATION IN FEET.
TRSE TOP OF ROCK SOCKET ELEVATION IN FEET.
BRSE BOTTOM OF ROCK SOCKET ELEVATION IN FEET.

5 0 5 FEET
VERTICAL SCALE

NOTES:

1. THE CORE BORING LOGS AND RELATED INFORMATION DEPICT SUBSURFACE CONDITIONS ONLY AT THE SPECIFIC LOCATIONS AND DATES INDICATED. SOIL AND ROCK CONDITIONS AND GROUNDWATER LEVELS AT OTHER LOCATIONS MAY DIFFER FROM THE CONDITIONS OCCURRING AT THESE BORING LOCATIONS. ALSO, THE PASSAGE OF TIME MAY RESULT IN A CHANGE OF THE CONDITIONS AT THESE BORING LOCATIONS.
2. THIS SHEET IS INCLUDED FOR THE CONVENIENCE OF THE DEPARTMENT AND IS NOT A PART OF THE CONTRACT DRAWINGS. (SEE PUBLICATION 408/2000, SECTION 102.05).
3. THE CLASSIFICATIONS OF THE MATERIALS ENCOUNTERED HAVE BEEN VERIFIED. KAF

DRAWN BY: MEL	DATE: 06-25-07	CHK'D BY: MCM	DATE: 06-25-07	APR'D BY: RAF	DATE: 06-25-07

PREPARED BY:
AWK CONSULTING ENGINEERS, INC.
PITTSBURGH, PA 15235

DATE: 7/3/07

COMMONWEALTH OF PENNSYLVANIA
REGISTERED PROFESSIONAL
ROBERT E FAIRBANK
GEOLOGIST
No. PG-000751-E
COMMONWEALTH OF PENNSYLVANIA

COMMONWEALTH OF PENNSYLVANIA
DEPARTMENT OF TRANSPORTATION

ARMSTRONG COUNTY
SR 1038 SECTION 150

SEG 0040 OFFSET 1110
SR 1038-150 STA 1956+35.83 AND SR 4025 OVER BUFFALO AND PITTSBURGH RAILROAD
4 SPAN STEEL MULTI-GIRDER BRIDGE AND SINGLE SPAN ROLLED BEAM T-SPAN
STRUCTURE BORING LOGS

RECOMMENDED _____

SHEET 95 OF 97
S-27038

A-00122496

G:\P\EC05I6001\WestKittanningBridge\PSA&E_SUB \EC05I6001LB_SL07.dgn
12:31:41 PM
7/3/2007

COUNTY	DISTRICT
ARMSTRONG	10

WINGWALL F

WKB-036
STA 1958+91, 94.44' lt
ELEVATION 850.3

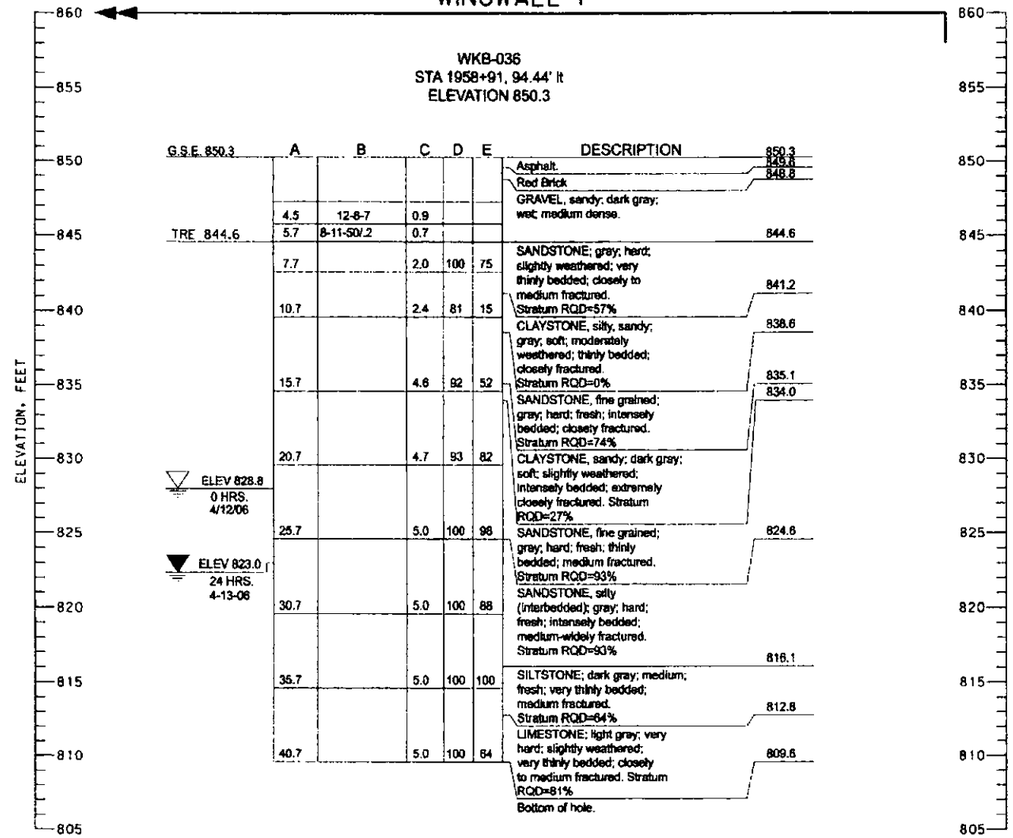

ROCK SOCKET ELEVATIONS

LOCATIONS	BOTTOM-OF-ROCK SOCKET ELEVATION (FEET)	ROCK SOCKET LENGTH (FEET)
ABUTMENT 3 (8 TANGENT CAISSONS)	VARIES 820.00 LT TO 810.00 RT	9
WINGWALL B (2 CAISSONS)	VARIES 830.00 RT TO 841.50 LT	5
WINGWALL F (5 CAISSONS)	VARIES 810.00 LT TO 825.75 RT	9

LEGEND

COLUMN A - DENOTES DEPTH FOR BOTTOM OF SPOON SAMPLE OR BOTTOM OF CORE RUN IN FEET.
COLUMN B - DENOTES NUMBER OF BLOWS ON SPOON SAMPLER FOR EVERY 6" OR AS NOTED.
COLUMN C - DENOTES SPOON SAMPLER OR CORE RECOVERY IN FEET.
COLUMN D - DENOTES CORE RECOVERY IN PERCENT.
COLUMN E - DENOTES ROCK QUALITY DESIGNATION (RQD) IN PERCENT.
ELEV. / HR. / DATE - GROUND WATER ELEVATION IN FEET.
GSE INDICATES EXISTING GROUND SURFACE ELEVATION IN FEET.
TRE INDICATES TOP OF ROCK ELEVATION IN FEET.
BFE INDICATES BOTTOM OF FOOTING ELEVATION IN FEET.
TRSE TOP OF ROCK SOCKET ELEVATION IN FEET.
BRSE BOTTOM OF ROCK SOCKET ELEVATION IN FEET.

NOTES:

1. THE CORE BORING LOGS AND RELATED INFORMATION DEPICT SUBSURFACE CONDITIONS ONLY AT THE SPECIFIC LOCATIONS AND DATES INDICATED. SOIL AND ROCK CONDITIONS AND GROUNDWATER LEVELS AT OTHER LOCATIONS MAY DIFFER FROM THE CONDITIONS OCCURRING AT THESE BORING LOCATIONS. ALSO, THE PASSAGE OF TIME MAY RESULT IN A CHANGE OF THE CONDITIONS AT THESE BORING LOCATIONS.
2. THIS SHEET IS INCLUDED FOR THE CONVENIENCE OF THE DEPARTMENT AND IS NOT A PART OF THE CONTRACT DRAWINGS. (SEE PUBLICATION 408/2000, SECTION 102.05).
3. THE CLASSIFICATIONS OF THE MATERIALS ENCOUNTERED HAVE BEEN VERIFIED. RAF

5 0 5 FEET
VERTICAL SCALE

DRAWN BY: MEL	DATE: 06-25-07	CHK'D BY: MCM	DATE: 06-25-07	APR'D BY: RAF	DATE: 06-25-07

PREPARED BY:
AWK CONSULTING ENGINEERS, INC.
PITTSBURGH, PA 15235

DATE: 7/3/07

COMMONWEALTH OF PENNSYLVANIA
REGISTERED PROFESSIONAL
ROBERT A. FAIRBANK
GEOLOGIST
No. PG-000751-E

COMMONWEALTH OF PENNSYLVANIA
DEPARTMENT OF TRANSPORTATION

ARMSTRONG COUNTY
SR 1038 SECTION 150
SEG 0040 OFFSET 1110
SR 1038-150 STA 1956+35.83 AND SR 4025 OVER BUFFALO AND PITTSBURGH RAILROAD
4 SPAN STEEL MULTI-GIRDER BRIDGE AND SINGLE SPAN ROLLED BEAM T-SPAN
STRUCTURE BORING LOGS

RECOMMENDED _____

SHEET 97 OF 97
S-27038

A-00122496

G:\P\EC05160101\WestKittanningBridge\PS&E_SUB\ECO5160101_BL09.dgn
12:32:53 PM
7/3/2007

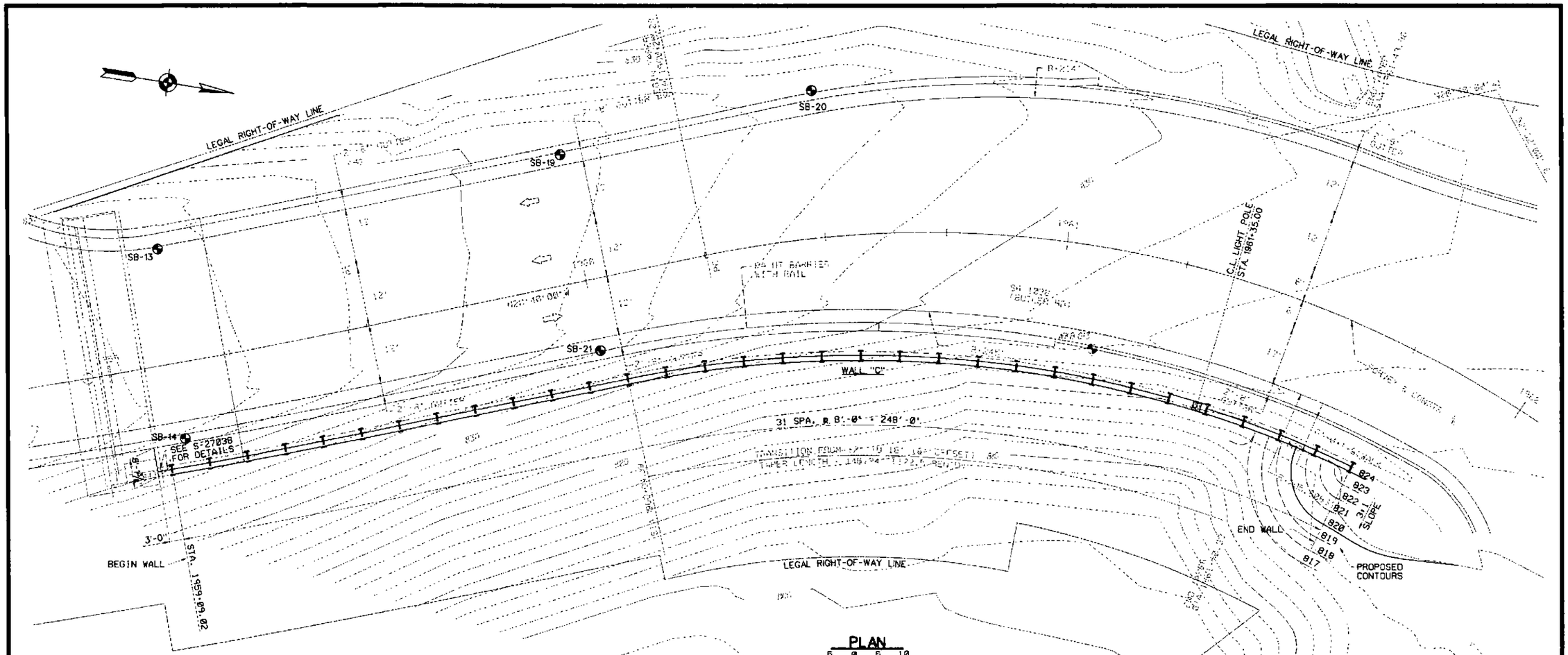

SR 1038 SURVEY & CONSTR. ℄
P.I. STA. 1958+07.86

△	= 11° 40'00" LT
D	= 3° 58'04"
T	= 147.52'
L	= 294.03'
R	= 1444.00'
E	= 7.52'

P.C. STA. = 1956+60.33
P.T. STA. = 1959+54.36
S.E. = 4.1%

SR 1038 SURVEY & CONSTR. ℄
P.I. STA. 1961+91.35

△	= 73° 12'00" RT
D	= 25° 37'24"
T	= 166.07'
L	= 285.68'
R	= 223.61'
E	= 54.92'

P.C. STA. = 1960+25.29
P.T. STA. = 1963+10.97
S.E. = 6.0%

DRAWING INDEX

DWG. NO.	TITLE
1	GENERAL PLAN
2	ELEVATION AND TYPICAL SECTIONS
3	GENERAL NOTES AND QUANTITIES
4	PILE SCHEDULE & DETAILS
5	LAGGING DETAILS
6	LIGHT POLE BASE DETAILS
7	REINFORCING BAR SCHEDULE
8	CORE BORINGS PLAN
9	CORE BORINGS

BORING LOCATIONS

NUMBER	STATION	OFFSET	REMARKS
W-B 032	1959+08.87	30.73' RT.	EXIST. (2003)
WKB-032 (SB-13)	1959+14.00	23.49' LT.	2006 BORING
WKB-033 (SB-14)	1959+13.00	15.57' RT.	2006 BORING
WKB-038 (SB-19)	1960+00.00	26.17' LT.	2006 BORING
WKB-039 (SB-20)	1960+50.00	30.00' LT.	2006 BORING
WKB-040 (SB-21)	1960+00.00	14.48' RT.	2006 BORING

P.V.I. STA. 1952+50.00
EL. = 899.02
V.C. = 50.0 FT.
W.O. = 0.03 FT.
-8.09%
-7.60%

LEGEND

EXIST. BORING
BORING DRILLED IN 2006
EXISTING CONTOURS
DIRECTION OF TRAFFIC
ROADWAY ITEM

DES: R.C. | DWN: J.R. | CKD: R.C.

CLASSIFICATION OF EARTHWORK FOR STRUCTURES	RC-11M	4/15/04
BACKFILL AT STRUCTURES	RC-12M	3/30/06
CONCRETE DECK SLAB DETAILS	BC-752M	7/29/05
ANCHOR SYSTEMS	BC-734M	4/15/04
WALL CONSTRUCTION & EXPANSION JOINT DETAILS	BC-735M	1/21/03
REINFORCEMENT BAR FABRICATION DETAILS	BC-736M	1/21/03
GENERAL NOTES AND LEGENDS FOR SOIL/ROCK DESCRIPTION	BC-795M	1/21/03
DESCRIPTION	DWG.NO.	APP.DATE

SUPPLEMENTAL DRAWINGS

COMMONWEALTH OF PENNSYLVANIA
DEPARTMENT OF TRANSPORTATION
PRADIP R. PATEL
Pradip R. Patel 7/2/07
SIGNATURE & DATE

PREPARED BY:
TRI-STATE DESIGN & DEVELOPMENT
9 EAST MALL PLAZA
CARNEGIE, PA. 15106

Mark	Description	By	Chk'd.	Recm'd	Date
REVISIONS					

COMMONWEALTH OF PENNSYLVANIA
DEPARTMENT OF TRANSPORTATION

ARMSTRONG COUNTY
S.R. 1038 SECTION 150
SEGMENT 0050 OFFSET 0525
S.R. 1038 STA. 1958+41.25
SOLDIER PILE WALL, WALL C
GENERAL PLAN

RECOMMENDED
Thomas P. Macioce
CHIEF BRIDGE ENGINEER

SHEET 1 OF 9
SUPPLEMENTAL DRAWINGS
S-27372

A-00122496

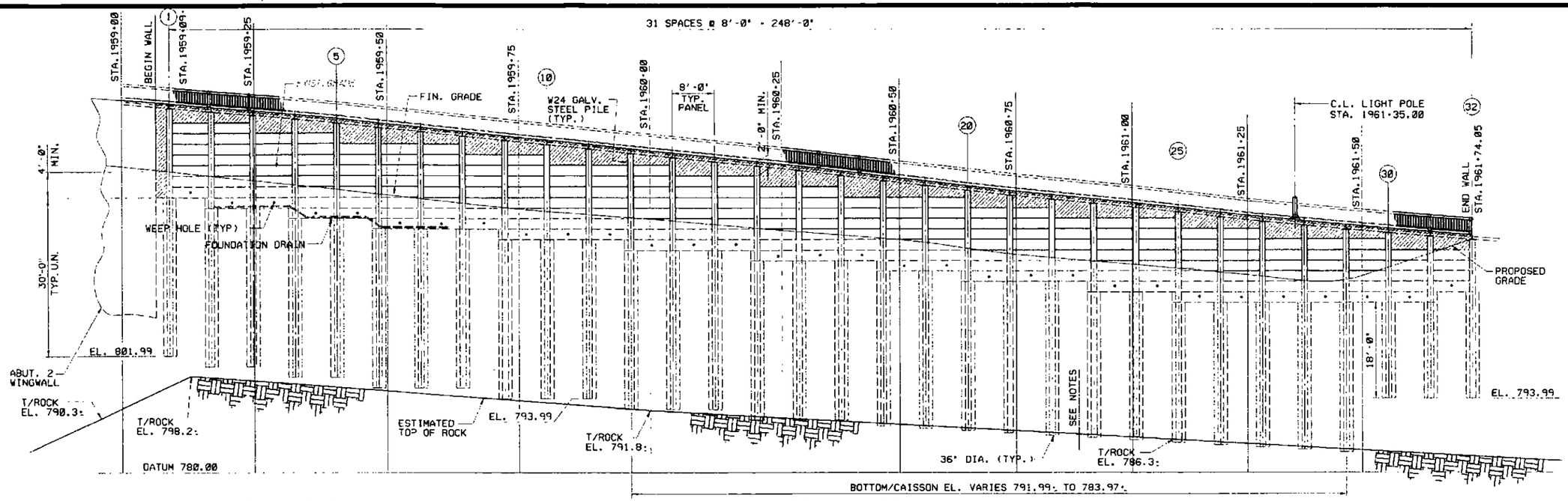

WALL ELEVATION

5 0 5 10
SCALE IN FEET

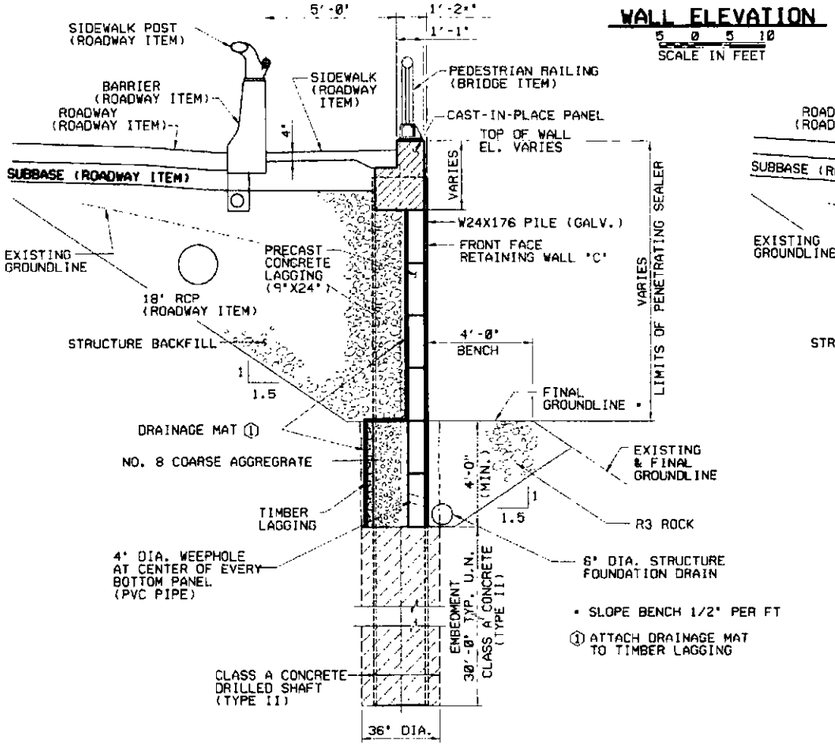

TYPICAL WALL SECTION @ BARRIER

1 0 1 2
SCALE IN FEET

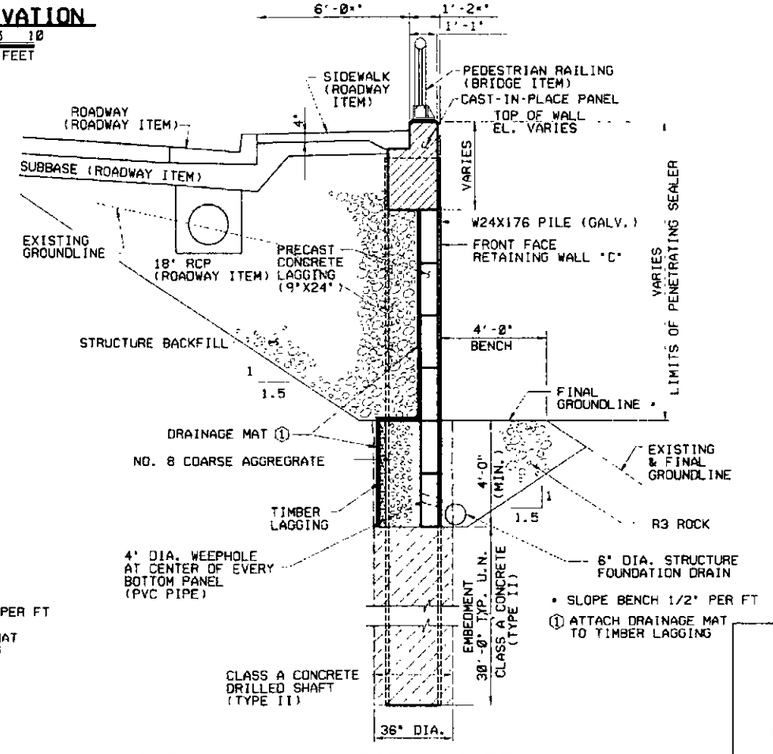

TYPICAL WALL SECTION @ CURB

1 0 1 2
SCALE IN FEET

NOTES:

1. FOR ROCK NOTES, SEE FOUNDATION NOTES ON SHEET 3.
2. FOR ROCK DETAILS, SEE SHEET 4.

Mark	Description	By	Chk'd.	Recm'd	Date
REVISIONS					

DES: R.C. | DWN: J.R. | CKD: R.C.

COMMONWEALTH OF PENNSYLVANIA
DEPARTMENT OF TRANSPORTATION

ARMSTRONG COUNTY
S.R. 1038 SECTION 150
SEGMENT 0850 OFFSET 0525
S.R. 1038 STA. 1958+41.25
SOLDIER PILE WALL, WALL C
ELEVATION AND TYP. SECTIONS

RECOMMENDED _____

SHEET 2 OF 9

S-27372

A-00122496

GENERAL NOTES

- PROVIDE MATERIALS AND WORKMANSHIP IN ACCORDANCE WITH SPECIFICATIONS, PUBLICATION 408/2007, INCLUDING CURRENT SUPPLEMENTS, ANSI/AASHTO/AWS/D1.5-2002 BRIDGE WELDING CODE AND CONTRACT SPECIAL PROVISIONS. (USE ANSI/AWS/D1.1-2002 FOR WELDING NOT COVERED IN ANSI/AASHTO/AWS/D1.5-2002.)
- DIMENSIONS SHOWN ARE FOR A NORMAL TEMPERATURE OF 68 DEGREES F. ALL DIMENSIONS SHOWN ARE HORIZONTAL EXCEPT AS NOTED.
- VERIFY ALL DIMENSIONS AND GEOMETRY OF THE EXISTING STRUCTURE IN THE FIELD AS NECESSARY FOR PROPER FIT OF THE PROPOSED CONSTRUCTION.

DESIGN SPECIFICATIONS:

- AASHTO LRFD BRIDGE DESIGN SPECIFICATIONS, SECOND EDITION, 1998 AND AS SUPPLEMENTED BY DESIGN MANUAL, PART 4, APRIL 2000 (INCLUDING AUG. 2005 REVISIONS)
- DESIGN IS IN ACCORDANCE WITH THE LRFD METHOD.
- EARTH PRESSURES IN ACCORDANCE WITH DM4, SECTION 3.11.5.
- SEISMIC FORCES WERE CONSIDERED FOR ACCELERATION COEFFICIENT OF 0.05.

SOIL/ROCK PARAMETERS

STATION 1959+09.0 TO STATION 1961+73.5

- SOIL TO GRADE (ENGR. FILL): ϕ = 32°; γ = 115 pcf (MOIST); γ = 120 pcf (SATURATED); Ka = 0.307; Kp = N/A
- SOIL BELOW GRADE (RESIDUAL): ϕ = 36°; γ = 120 pcf (MOIST); γ = 125 pcf (SATURATED); Ka = 0.260; Kp = 2.06
- ROCK: TYPE: SANDSTONE OR SILTSTONE

ULTIMATE SIde RESISTANCE:	137 psi
COEFFICIENT OF RESISTANCE:	0.55
FACTORED SIDE RESISTANCE:	75 psi
SHEAR STRENGTH OF ROCK MASS:	14.4 ksf

DESIGN LIVE LOADS:

- SURCHARGE IN ACCORDANCE WITH DM4, SECTION 3.11.6.

CONCRETE NOTES:

- USE CLASS A CEMENT CONCRETE FOR, CLOSURE WALL, DRILLED SHAFTS AND ROCK SOCKETS.
- USE CLASS AA CEMENT CONCRETE FOR CAST-IN-PLACE LAGGING AND CAST-IN-PLACE CAP.
- USE CLASS AA CEMENT CONCRETE FOR PRECAST LAGGING.
- USE TYPE II SULFATE RESISTANT CEMENT IN DRILLED SHAFTS AND ROCK SOCKETS.
- PROVIDE 2" CONCRETE COVER ON REINFORCEMENT BARS EXCEPT AS NOTED.
- RAKE FINISH ALL HORIZONTAL CONSTRUCTION JOINTS EXCEPT AS INDICATED.
- CHAMFER EXPOSED CONCRETE EDGES 1" X 1" EXCEPT AS NOTED.
- USE TREMIE METHOD TO DEPOSIT CONCRETE AROUND W24 PILES.

REINFORCEMENT:

- EPOXY COAT ALL REINFORCEMENT BARS AS INDICATED.
- PROVIDE GRADE 60 REINFORCING STEEL BARS THAT MEET THE REQUIREMENTS OF ASTM A615/A, A616/A AND A706/A. DO NOT WELD GRADE 60 REINFORCING STEEL BARS UNLESS SPECIFIED. GRADE 40 REINFORCING STEEL BARS MAY BE SUBSTITUTED WITH A PROPORTIONAL INCREASE IN CROSS SECTIONAL AREA, IF APPROVED BY THE CHIEF BRIDGE ENGINEER. DO NOT USE RAIL STEEL A616/A REINFORCEMENT BARS WHERE BENDING OR WELDING OF THE REINFORCEMENT BARS IS INDICATED.
- PROVIDE MINIMUM LAP SPLICE AND EMBEDMENT LENGTH OF 30 BAR DIAMETERS OR IN ACCORDANCE WITH AASHTO AS MODIFIED BY DESIGN MANUAL PART 4, WHICHEVER IS GREATER.
- WELDING OF REINFORCEMENT BARS DURING FABRICATION OR CONSTRUCTION IS NOT PERMITTED UNLESS SPECIFIED.

STRUCTURAL STEEL:

- PROVIDE STRUCTURAL STEEL PILES CONFORMING TO AASHTO M270 GRADE 50 (ASTM A709, GRADE 50), GALVANIZED, UNLESS NOTED.

FOUNDATION:

- 3'-0" DIAMETER DRILLED SHAFT IN SOIL WITH 2'-10" DIAMETER DRILLED SHAFT IN ROCK/ROCK SOCKETS AND W24 GALVANIZED BEAM SOLDIER PILES.
- BOTTOM OF SHAFTS MAY BE ORDERED BY THE ENGINEER TO BE AT ANY ELEVATION NECESSARY TO PROVIDE A PROPER FOUNDATION.
- IF ROCK IS ENCOUNTERED AT AN EMBEDMENT LENGTH OF GREATER THAN 26 FEET AND LESS THAN 30 FEET, DRILL TO ROCK REFUSAL (26 FEET IS REQUIRED TO DEVELOP THE LATERAL SUPPORT) PER DISTRICT GEOTECHNICAL ENGINEER APPROVAL.
- IF ROCK IS ENCOUNTERED AT LESS THAN 26 FEET EMBEDMENT, BUT GREATER THAN 18 FEET EMBEDMENT, PROVIDE A ROCK SOCKET TO REACH 26 FEET EMBEDMENT. IF ROCK IS ENCOUNTERED AT LESS THAN 18 FEET EMBEDMENT, PROVIDE A 8 FEET ROCK SOCKET.
- FOR THE 36-INCH CONTINUOUS FLIGHT AUGERS, AUGER REFUSAL IS DEFINED AS 1 FOOT PER MINUTE OR LESS OF PENETRATION NEAR THE TOP OF BEDROCK BY AUGERING EQUIPMENT HAVING THE TORQUE OF 100,000 FT-LBS AND A CROWD OF 60,000 LBS. IF AUGER REFUSAL IS ENCOUNTERED ABOVE TOP OF BEDROCK, AN OBSTRUCTION-DRILLING RIG SHOULD BE USED TO DEEPEN THE HOLE UNTIL AUGERING IS AGAIN POSSIBLE, OR TOP OF BEDROCK IS ENCOUNTERED. TOP OF ROCK SHALL BE VERIFIED BY THE DISTRICT GEOTECHNICAL ENGINEER.

UTILITIES:

- COORDINATE, LOCATE AND CONDUCT WORK RELATED TO PUBLIC AND PRIVATE UTILITIES IN ACCORDANCE WITH PUBLICATION 408/2007 SECTIONS 105.06 AND 107.12.

ALTERNATE STRUCTURE ITEMS

ITEM NUMBER	ITEM	UNIT	TOTAL
8600-0002	SOLDIER PILE RETAINING WALL, AS-DESIGNED, S-27372 (A)	LS	1
8610-0002	CONCRETE RETAINING WALL (A)	LS	1

APPROXIMATE QUANTITIES - RETAINING WALL, AS DESIGNED

ITEM NUMBER	ITEM	UNIT	TOTAL
8600-0002	SOLDIER PILE RETAINING WALL, AS DESIGNED, S-27372 (A)	LS	
	CLASS 3 EXCAVATION (D)	CY	716
	CLASS AA CEMENT CONCRETE (D) (A)	CY	37
	9" PRECAST CONCRETE LAGGING (D) (C)	SF	3400
	PROTECTIVE COATING FOR REINFORCED CONCRETE SURFACES (PENETRATING SEALERS, REINF. CONC. SUBSTRUCTURE SURFACES) (D)	SY	66
	FOUNDATION DRAIN (D)	LF	250
	SELECTED BORROW EXCAVATION, STRUCTURAL BACKFILL (D)	CY	875
	TREATED TIMBER LAGGING (D) (A)	SF	1050
	R-3 ROCK (D)	CY	117
	No. 8 COARSE AGGREGATE (D)	CY	35
	DRAINAGE MAT (D) (A)	SF	2750
	PEDESTRIAN RAILING	LF	251
AND 1002-0053	REINFORCEMENT BARS, EPOXY COATED (B)	LB	3100
AND 1006-0207	36" DIAMETER DRILLED CAISSONS, SHAFT SECTION IN SOIL (E)	LF	1170
AND 1006-0307	36" DIAMETER DRILLED CAISSONS, ROCK SOCKET (E)	LF	36
AND 9000-0402	FABRICATED STRUCTURAL STEEL, W24x176 - GALVANIZED	LF	1460

NOTE: SEE LEGEND.

QUANTITIES LEGEND

(A) SEE SPECIAL PROVISIONS.

(B) FOR AS DESIGNED STRUCTURE, INCLUDED IN STRUCTURE BID ITEMS. FOR ALTERNATE DESIGNS, INCLUDED IN STRUCTURE LUMP SUM BID ITEM.

(C) EPOXY COATED REINFORCEMENT INCIDENTAL TO LAGGING

(D) ITEMS IN LUMP SUM ITEM 8600-0002, RETAINING WALL, AS DESIGNED, S-27372 FOR INFORMATION ONLY.

(E) CAISSON INCLUDES CAISSON WITH CONCRETE AND REINFORCEMENT.

Mark	Description	By	Chk'd.	Recm'd	Date
REVISIONS					

COMMONWEALTH OF PENNSYLVANIA
DEPARTMENT OF TRANSPORTATION

ARMSTRONG COUNTY
S.R. 1038 SECTION 150
SEGMENT 0050 OFFSET 0525
S.R. 1038 STA. 1960+41.25
SOLDIER PILE WALL, WALL C
GENERAL NOTES & QUANTITIES

RECOMMENDED JUL 06 2007

SHEET 3 OF 9

S-27372

DES: R.C. | DWN: C.E. | CKD: R.C.

FILE BOXES

A-00122496

COUNTY	DISTRICT
ARMSTRONG	10

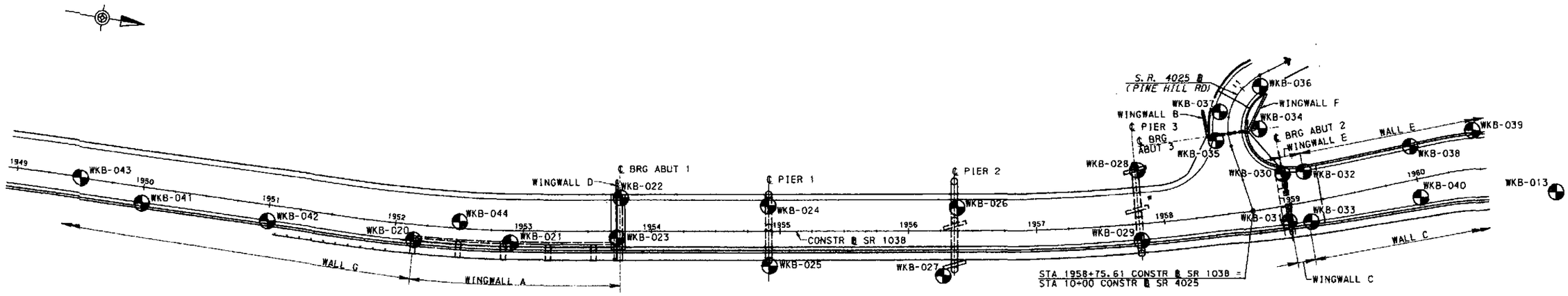

LOCATION PLAN
NOT TO SCALE

WALL C - PILE (CAISSON) TIP ELEVATIONS West Kittanning Bridge Northern Approach Ramp	
CAISSON NO	CAISSON TIP ELEVATION
1 THRU 11	801.99 - 793.99
12 THRU 29	791.99 - 783.97
30 THRU 32	793.99

LEGEND

WKB-026 ⊕ BORING FOR FOUNDATION DESIGN

LEGEND	
COLUMN A -	DENOTES DEPTH FOR BOTTOM OF SPOON SAMPLE OR BOTTOM OF CORE RUN IN FEET.
COLUMN B -	DENOTES NUMBER OF BLOWS ON SPOON SAMPLER FOR EVERY 6" OR AS NOTED.
COLUMN C -	DENOTES SPOON SAMPLER OR CORE RECOVERY IN FEET.
COLUMN D -	DENOTES CORE RECOVERY IN PERCENT.
COLUMN E -	DENOTES ROCK QUALITY DESIGNATION (RQD) IN PERCENT.
ELEV. / HR. / DATE	GROUND WATER ELEVATION IN FEET.
GSE	INDICATES EXISTING GROUND SURFACE ELEVATION IN FEET.
TRE	INDICATES TOP OF ROCK ELEVATION IN FEET.
BLE	INDICATES BOTTOM OF LEVELING PAD IN FEET.
TRSE	TOP OF ROCK SOCKET ELEVATION IN FEET.
BRSE	BOTTOM OF ROCK SOCKET ELEVATION IN FEET.

NOTES:

1. THE CORE BORING LOGS AND RELATED INFORMATION DEPICT SUBSURFACE CONDITIONS ONLY AT THE SPECIFIC LOCATIONS AND DATES INDICATED. SOIL AND ROCK CONDITIONS AND GROUNDWATER LEVELS AT OTHER LOCATIONS MAY DIFFER FROM THE CONDITIONS OCCURRING AT THESE BORING LOCATIONS. ALSO, THE PASSAGE OF TIME MAY RESULT IN A CHANGE OF THE CONDITIONS AT THESE BORING LOCATIONS.
2. THIS SHEET IS INCLUDED FOR THE CONVENIENCE OF THE DEPARTMENT AND IS NOT A PART OF THE CONTRACT DRAWINGS. (SEE PUBLICATION 408/2000, SECTION 102.05).
3. THE CLASSIFICATIONS OF THE MATERIALS ENCOUNTERED HAVE BEEN VERIFIED. RAF

5 0 5 FEET
VERTICAL SCALE

THE INFORMATION SUBMITTED REPRESENTS THE CONDITIONS ENCOUNTERED BY THE TEST BORING PROGRAM, INCLUDING LOGS, SOIL SAMPLES, BORING ROCK CORES, CLASSIFICATION OF MATERIALS AND DEPTH OF BORINGS.

Roy A. Fairbank 7/3/07
(GEOTECHNICAL ENGINEER/ENGINEERING GEOLOGIST)

PREPARED BY:
AWK CONSULTING ENGINEERS, INC.
PITTSBURGH, PA 15235

DATE: 7/3/07

COMMONWEALTH OF PENNSYLVANIA
REGISTERED PROFESSIONAL
ROBERT A. FAIRBANK
GEOLOGIST
No. PG-000751-E
PENNSYLVANIA

COMMONWEALTH OF PENNSYLVANIA
DEPARTMENT OF TRANSPORTATION

ARMSTRONG COUNTY
SR 1038 SECTION 150

SEG 0050 OFFSET 0525
S. R. 1038 STA 1960+41.25

SOLDIER PILE WALL - WALL C
STRUCTURE BORING LOGS

RECOMMENDED _____

SHEET 8 OF 9
S-27372

A-00122496

DRAWN BY: MEL	DATE: 06-25-07	CHK'D BY: MCM	DATE: 06-25-07	APR'D BY: RAF	DATE: 06-25-07

G:\P\EC05160\01\West Kittanning Bridge\PS&E_SUB \EC05160101_WALL C_FL02.dgn
1:35:15 PM
7/3/2007