Teresa K. Harrold
Director, Corporate Counsel
852 Wesley Drive | Mechanicsburg, PA 17055
Phone: 717-550-1562 | Fax: 717-550-1255
E-Mail: teresa.harrold@amwater.com

VIA eFiling

January 18, 2022

Rosemary Chiavetta, Secretary
Commonwealth of Pennsylvania
Pennsylvania Public Utility Commission
Commonwealth Keystone Building
400 North Street
Harrisburg, PA 17120

Re: Application of Pennsylvania-American Water Company-Wastewater Division for approval of the rights to: (1) acquire, by sale, certain wastewater system assets of Foster Township; and (2) begin to offer, render, furnish and supply wastewater service to the public in portions of Foster Township, Luzerne County, Pennsylvania

Docket No. A-2021-3028676

Dear Secretary Chiavetta:

On December 17, 2021, Pennsylvania-American Water Company (the "Company") received Data Request Set 1 from the Bureau of Technical Utility Services for the above-referenced Application. The Company was granted an extension until January 18, 2022, to file the Company's responses.

Attached are the Company's responses to the data request. If you have any questions, please contact me.

Sincerely,

Teresa K. Harrold

Enclosures

cc: All Parties on the attached Certificate of Service with Enclosures
Matthew T. Lamb, P.E. VIA E-Mail at mlamb@pa.gov

Pennsylvania-American Water Company's Responses to
the Bureau of Technical Utility Services
Water/Wastewater Division
Data Request Set 1

Docket No. A-2021-3028676

Application of Pennsylvania-American Water Company-Wastewater Division for approval of the rights to: (1) acquire, by sale, certain wastewater system assets of Foster Township; and (2) begin to offer, render, furnish and supply wastewater service to the public in portions of Foster Township, Luzerne County, Pennsylvania

A-1. The Application's Section 2.c. indicated PAWC-WD requested fully executed copies of the Modifying Contracts to the "Agreement By and Among Foster Township, the Borough of Freeland Municipal Authority, Freeland Borough, and Butler Township", dated May 11 and December 14, 2009, respectively (May and December 2009 Modifying Contracts). Please provide fully executed copies of the May and December 2009 Modifying Contracts. Also, if fully executed copies of the May and December 2009 Modifying Contracts cannot be provided, please provide copies of *pro forma* agreements that PAWC-WD would enter into before closing in place of any agreements that are not fully executed.

Response: The March 19, 2009 Agreement By and Among Foster Township, the Borough of Freeland Municipal Authority, Freeland Borough, and Butler Township, which is attached to the Application as Appendix C, is fully executed and is actually one and the same with the May 11, 2009 Agreement. The March 19, 2009 Agreement will be assigned to PAWC-WD at Closing.

The December 14, 2009 Agreement is also included in Appendix C. PAWC-WD does not have a fully executed version of the December 14, 2009 Agreement. PAWC will work with the municipal entities to determine if an amendment to this Agreement needs to be executed and signed by all parties in advance of closing. If an amendment is prepared, it will be provided to the Commission and executed prior to closing.

Name: Michael Salvo
Title: Senior Manager, Business Development

Pennsylvania-American Water Company's Responses to
the Bureau of Technical Utility Services
Water/Wastewater Division
Data Request Set 1

Docket No. A-2021-3028676

Application of Pennsylvania-American Water Company-Wastewater Division for approval of the rights to: (1) acquire, by sale, certain wastewater system assets of Foster Township; and (2) begin to offer, render, furnish and supply wastewater service to the public in portions of Foster Township, Luzerne County, Pennsylvania

A-2. The Application's Section 6 indicated Foster Township's West End wastewater system (West End System) serves approximately 512 residential, 30 commercial, 1 industrial and 1 municipal customer for a total of 544 (512+30+1+1) customers. However, the Application's Appendix A, Asset Purchase Agreement (APA), Schedule 1.1, indicates the West End System collects wastewater from approximately 575 customers. Please explain the discrepancy between the customer totals listed in the Application and the Application's Appendix A and reconfirm the number of customers, by customer class, served by the West End System.

Response: 575 was the approximate number of customer premises provided to PAWC at the time the Asset Purchase Agreement (APA) was prepared. The approximate 544 customer premises count was derived from Foster's actual billing records at the time the Application was prepared.

Name: Michael Salvo
Title: Senior Manager, Business Development

Pennsylvania-American Water Company's Responses to
the Bureau of Technical Utility Services
Water/Wastewater Division
Data Request Set 1

Docket No. A-2021-3028676

Application of Pennsylvania-American Water Company-Wastewater Division for approval of the rights to: (1) acquire, by sale, certain wastewater system assets of Foster Township; and (2) begin to offer, render, furnish and supply wastewater service to the public in portions of Foster Township, Luzerne County, Pennsylvania

A-3. The Application's Section 17 provided journal entries without National Association of Regulatory Utility Commissioners Uniform System of Accounts (NARUC USOA) account numbers. Please quantify PAWC-WD's planned journal entries by major NARUC USOA plant account.

Response: Please see below for an example of the journal entry:

At Closing:

Account 104 – Utility Plant Purchased or Sold	$3,750,000	
Account 232 – Short Term Debt		$3,750,000

Record DOC Study:

Account 101 – Utility Plant in Service	$x.xxx.xxx	
Account 108 – Accumulated Depreciation	(xxx,xxx)	
Utility Plant Acquisition Adjustment	xxx,xxx	
Account 104 – Utility Plant Purchased or Sold		$3,750,000

The actual journal entry will depend upon the results of the final Depreciated Original Cost Study. The Utility Plant Acquisition adjustment, if any, will be recorded in Account 123 – Goodwill, 186.3 - Regulatory Assets or 253.1 - Regulatory Liabilities depending on if the acquisition adjustment is claimed in a future rate case.

Name: Michael Salvo
Title: Senior Manager, Business Development

Pennsylvania-American Water Company's Responses to
the Bureau of Technical Utility Services
Water/Wastewater Division
Data Request Set 1

Docket No. A-2021-3028676

Application of Pennsylvania-American Water Company-Wastewater Division for approval of the rights to: (1) acquire, by sale, certain wastewater system assets of Foster Township; and (2) begin to offer, render, furnish and supply wastewater service to the public in portions of Foster Township, Luzerne County, Pennsylvania

A-4. The Application's Appendix A, APA, Section 1.7 – Stormwater Facilities appears to indicate the West End System may have stormwater facilities interconnected with the wastewater system. Please provide responses to the following:

a. Detail any existing or known sources of stormwater, other than inflow and infiltration, being discharged into the West End System.

Response: There are no known stormwater facilities connected to the West End Sanitary Sewer System.

b. If there are any existing or known sources of stormwater being discharged into the West End System, provide a breakdown of the estimated costs PAWC-WD would incur to disconnect such sources from the West End System and connect such sources to municipal separate storm sewer system facilities.

Response: There are no known stormwater facilities connected to the West End Sanitary Sewer System.

c. If stormwater interconnections exist with the West End System, explain why PAWC-WD ratepayers should be subject to the financial, managerial, and legal risks related to constructing municipal separate storm sewer system facilities for dedication at no cost to Foster Township.

Response: There are no known stormwater facilities connected to the West End Sanitary Sewer System.

Name: Thomas E. Barna, Jr., P.E.
Title: Penn Eastern Engineers, LLC – Municipal Engineer for Foster Township

Pennsylvania-American Water Company's Responses to
the Bureau of Technical Utility Services
Water/Wastewater Division
Data Request Set 1

Docket No. A-2021-3028676

Application of Pennsylvania-American Water Company-Wastewater Division for approval of the rights to: (1) acquire, by sale, certain wastewater system assets of Foster Township; and (2) begin to offer, render, furnish and supply wastewater service to the public in portions of Foster Township, Luzerne County, Pennsylvania

A-5. Please indicate whether the Application's Appendix A, APA, was negotiated at arm's length.

Response: The transaction was negotiated at arm's length. Please refer to paragraph 13, page 5 of the Application.

Name: Michael Salvo
Title: Senior Manager, Business Development

Pennsylvania-American Water Company's Responses to
the Bureau of Technical Utility Services
Water/Wastewater Division
Data Request Set 1

Docket No. A-2021-3028676

Application of Pennsylvania-American Water Company-Wastewater Division for approval of the rights to: (1) acquire, by sale, certain wastewater system assets of Foster Township; and (2) begin to offer, render, furnish and supply wastewater service to the public in portions of Foster Township, Luzerne County, Pennsylvania

A-6. The Application's Appendix B included an Agreement between the Borough of Freeland Municipal Authority (Authority), Freeland Borough (Freeland), and Foster Township (Foster), dated December 8, 1999 (December 1999 Agreement). The December 1999 Agreement, Sections 4(b) and 4(c), stated the Freeland Borough Council shall appoint one of five individuals, proposed by Foster and meeting certain eligibility criteria, to fill certain vacancies on the Authority Board. Please clarify whether Foster will retain the right to fill an eligible vacancy on the Authority Board or, as part of the transaction, PAWC-WD will assume this right.

Response: At this time, it has not been determined whether PAWC-WD plans to assume the right to fill an eligible vacancy on the Authority Board.

Name: Michael Salvo
Title: Senior Manager, Business Development

Pennsylvania-American Water Company's Responses to
the Bureau of Technical Utility Services
Water/Wastewater Division
Data Request Set 1

Docket No. A-2021-3028676

Application of Pennsylvania-American Water Company-Wastewater Division for approval of the rights to: (1) acquire, by sale, certain wastewater system assets of Foster Township; and (2) begin to offer, render, furnish and supply wastewater service to the public in portions of Foster Township, Luzerne County, Pennsylvania

A-7. The Application's Appendix B, December 1999 Agreement, Section 10(A) indicated the total gallons of sewage discharge from the West End System into the Authority's system shall be read and recorded. Please provide the monthly metered discharge totals from the West End System into the Authority system for the preceding twelve (12) months.

Response: This information was requested from the Authority, but it has not yet been provided to Foster or PAWC. PAWC will supplement this response upon receipt of the information.

Name: Michael Salvo
Title: Senior Manager, Business Development

Pennsylvania-American Water Company's Responses to
the Bureau of Technical Utility Services
Water/Wastewater Division
Data Request Set 1

Docket No. A-2021-3028676

Application of Pennsylvania-American Water Company-Wastewater Division for approval of the rights to: (1) acquire, by sale, certain wastewater system assets of Foster Township; and (2) begin to offer, render, furnish and supply wastewater service to the public in portions of Foster Township, Luzerne County, Pennsylvania

A-8. The Application's Appendix B, December 1999 Agreement, Section 13(E) indicated Foster will bill all township customers, which shall include Butler residents on the township collection facilities. Also, the Application's Appendix B, January 2010 Modifying Contract, Paragraph 9 indicates that Section 13(E) of the 1999 Agreement was amended such that Foster would bill Butler and that the Authority would bill both Foster and Butler for certain charges. Please provide responses to the following:

a. Clarify whether Foster bills Butler residents directly for wastewater conveyance to the West End System or if Foster bills Butler as a bulk customer for wastewater from Butler's wastewater systems.

Response: Foster Township does not individually bill Butler Township residents. Rather, Butler Township is billed monthly as a bulk customer based on $15 per EDU per month.

b. Provide a copy of a recent bill from Foster to a Butler resident or a copy of the most recent bill from Foster to Butler for bulk wastewater service.

Response: Please see TUS-A-8-b_Attachment 1. The monthly bill is based on $15 per 57 EDUs (Equivalent Dwelling Units).

c. Indicate whether PAWC-WD intends to bill Butler residents individually for wastewater services or bill Butler as a bulk wastewater customer.

Response: PAWC intends to bill Butler Township as a bulk wastewater customer.

d. If PAWC-WD intends to bill Butler residents directly, provide copies of *pro forma* agreements that PAWC-WD would enter into prior to closing to provide billing and collection services for Butler and/or the Authority.

Response: PAWC intends to bill Butler Township as a bulk wastewater customer as provided in the revised *pro forma* tariff supplement, TUS A-14_Attachment 1.

e. If PAWC-WD intends to bill Butler for bulk wastewater service, please state whether Butler's rates would be established by an agreement or PAWC-WD's tariff, and either:

i. Provide a copy of a *pro forma* agreement that PAWC-WD would enter into with Butler prior to closing to provide bulk wastewater service; or

Response: Not applicable.

ii. Explain how Butler's rates for wastewater service would be calculated under PAWC-WD's proposed tariff and, if necessary, amend the Application's Appendix F, PAWC-WD's *pro forma* tariff supplement to align PAWC-WD's proposed tariff language with PAWC-WD's intended rates for Butler. PAWC-WD's explanation and *pro forma* tariff must address how PAWC-WD will determine the number of EDUs assigned to Butler and any rates, rules, and regulations that Butler will be required to comply with as a condition of receiving service.

Response: PAWC intends to bill Butler Township as a bulk wastewater customer as provided in the revised *pro forma* tariff supplement, TUS A-14_Attachment 1. PAWC will adopt the current charge and EDU allocation currently used by Foster Township when billing Butler Township pursuant to the Agreements included in Appendix C of the Application.

For responses to a, b, and c
Name: Brittany Majewski
Title: Municipal Secretary Foster Township

For responses to d and e
Name: Michael Salvo
Title: Senior Manager, Business Development

TUS-A-8-b_Attachment 1

Foster Township

Butler Township Supervisors
83 Corporate Dr
Drums, PA 18222

Account#:	00001018
Billing Date:	01/01/2022
Due Date:	01/31/2022

Charges:

Sewer	$855.00

Service Address: Butler Upper Lehigh

Readings:

Previous Reading:	0
Current Reading:	0
Usage	0

Notes:

We now accept credit cards. A 3% surcharge will apply

Previous Balance	$0.00
Total by due date:	$855.00
Total after due date:	$940.50

Return this portion with your payment

Account#:	00001018
Name:	Butler Township Supervisors
Service Address:	Butler Upper Lehigh

Billing Date:	01/01/2022	**Total by due date:**	$855.00
Due Date:	01/31/2022	**Total after due date:**	$940.50

Pennsylvania-American Water Company's Responses to
the Bureau of Technical Utility Services
Water/Wastewater Division
Data Request Set 1

Docket No. A-2021-3028676

Application of Pennsylvania-American Water Company-Wastewater Division for approval of the rights to: (1) acquire, by sale, certain wastewater system assets of Foster Township; and (2) begin to offer, render, furnish and supply wastewater service to the public in portions of Foster Township, Luzerne County, Pennsylvania

A-9. The Application's Appendix C included copies of an Agreement between the Authority, Freeland, Foster, and Butler, dated March 23, 2005 (March 2005 Agreement) and the December 2009 Modifying Contract. Section 11(E) of the December 2009 Modifying Contract stated "Butler agrees to pay Foster from the "Starting Date" an Operation and Maintenance charge. [...] It is agreed that the initial Operation and Maintenance charge will be Five ($5.00) Dollars per month per EDU, which charge may be changed from time to time by Foster." Please provide responses to the following:

a. Indicate Foster's current Operation and Maintenance charge billed to Butler and, if this charge has been changed since the December 2009 Modifying Contract, provide copies of Foster resolutions and ordinances associated with such changes.

Response: Butler Township is billed $15 per EDU per month for utilization of the Foster Township West End wastewater collection and conveyance system.

b. Submit a copy of the documents Foster utilized as the basis to determine the current monthly Operation and Maintenance charge billed to Butler.

Response: See TUS-A-9-b_Attachment 1. The $15 per EDU per month was established by oral agreement of the parties as evidenced by their payments. After reasonable investigation, Foster Township has not found any documents that provide a basis for this fee.

c. Submit a copy of the most current Foster bill submitted to Butler which contains the Operation and Maintenance charge.

Response: See TUS-A-8-b_Attachment 1.

Pennsylvania-American Water Company's Responses to
the Bureau of Technical Utility Services
Water/Wastewater Division
Data Request Set 1

Docket No. A-2021-3028676

Application of Pennsylvania-American Water Company-Wastewater Division for approval of the rights to: (1) acquire, by sale, certain wastewater system assets of Foster Township; and (2) begin to offer, render, furnish and supply wastewater service to the public in portions of Foster Township, Luzerne County, Pennsylvania

d. Based upon PAWC-WD's response to Items A-1 and A-7.c., explain whether PAWC-WD will continue to include a distinct charge for Operation and Maintenance in alignment with December 2009 Modifying Contract.

Response: PAWC intends to bill Butler Township as a bulk wastewater customer as provided in the revised *pro forma* tariff supplement, TUS A-14_Attachment 1. No additional Operation and Maintenance charge will be assessed.

Responses for a, b, and c
Name: Brittany Majewski
Title: Municipal Secretary Foster Township

Response for d
Name: Michael Salvo
Title: Senior Manager, Business Development

TUS-A-9-b_Attachment 1

Foster Township

Account Details

Account#: 00001018

Butler Township Supervisors

Service Address: Butler Upper Lehigh
Mailng Address: 83 Corporate Dr

Drums PA 18222

Phone :

Coded Name: VACANT
Book#.Sequence: 1 /1018
Owner#:
Meter Type: M
Rollover: 4
Pump#:
Multiplier: 1.00
Units: GA
Meter Number: 000000000000
ID #:
MID:
Master Account : No

Income Center	Deposit	Balance	Current	30 -- 60	60 -- 90	90+	Rate
Sewer	$0.00	$0.00	$0.00	$0.00	$0.00	$0.00	B1
Other	$0.00	$0.00	$0.00	$0.00	$0.00	$0.00	
Penalties	$0.00	$0.00	$0.00	$0.00	$0.00	$0.00	
	$0.00	**$0.00**	**$0.00**	**$0.00**	**$0.00**	**$0.00**	

Reading Date	Reading	Usage	Sewer	Other	Penalties	Payment Date	Payment
12/31/2021	0	0	$ 855.00	$ 0.00	$ 0.00	12/20/2021	855.00
11/30/2021	0	0	$ 855.00	$ 0.00	$ 0.00	11/22/2021	855.00
10/31/2021	0	0	$ 855.00	$ 0.00	$ 0.00	10/18/2021	855.00
9/30/2021	0	0	$ 855.00	$ 0.00	$ 0.00	9/20/2021	855.00
8/31/2021	0	0	$ 855.00	$ 0.00	$ 0.00	8/17/2021	855.00
7/31/2021	0	0	$ 855.00	$ 0.00	$ 0.00	7/19/2021	855.00
6/30/2021	0	0	$ 855.00	$ 0.00	$ 0.00	6/14/2021	855.00
5/31/2021	0	0	$ 855.00	$ 0.00	$ 0.00	5/17/2021	855.00
4/30/2021	0	0	$ 855.00	$ 0.00	$ 0.00	4/19/2021	855.00
3/31/2021	0	0	$ 855.00	$ 0.00	$ 0.00	3/15/2021	855.00
2/1/2021	0	0	$ 855.00	$ 0.00	$ 0.00	3/1/2021	855.00
1/31/2021	0	0	$ 855.00	$ 0.00	$ 0.00	1/29/2021	855.00
12/31/2020	0	0	$ 855.00	$ 0.00	$ 0.00	12/15/2020	855.00

Pennsylvania-American Water Company's Responses to
the Bureau of Technical Utility Services
Water/Wastewater Division
Data Request Set 1

Docket No. A-2021-3028676

Application of Pennsylvania-American Water Company-Wastewater Division for approval of the rights to: (1) acquire, by sale, certain wastewater system assets of Foster Township; and (2) begin to offer, render, furnish and supply wastewater service to the public in portions of Foster Township, Luzerne County, Pennsylvania

A-10. The Application's Appendix D included an Agreement between the Authority, Freeland, Foster, and Butler, dated March 19, 2009 (March 2009 Agreement). The March 2009 Agreement contains a definition for "Butler Section of Upper Lehigh" that references an Exhibit "A" which appears to be missing. Please provide a copy of the March 2009 Agreement's Exhibit A.

Response: After reasonable investigation, Exhibit A is unable to be located.

Name: Brittany Majewski
Title: Municipal Secretary Foster Township

Pennsylvania-American Water Company's Responses to
the Bureau of Technical Utility Services
Water/Wastewater Division
Data Request Set 1

Docket No. A-2021-3028676

Application of Pennsylvania-American Water Company-Wastewater Division for approval of the rights to: (1) acquire, by sale, certain wastewater system assets of Foster Township; and (2) begin to offer, render, furnish and supply wastewater service to the public in portions of Foster Township, Luzerne County, Pennsylvania

A-11. The Application's Appendix F included a copy of PAWC-WD's *pro forma* tariff supplement. Page 11.X of PAWC-WD's *pro forma* tariff supplement indicates that a flat rate of $85 per month per equivalent dwelling unit (EDU) will be billed to each unmetered customer. Also, Page 21 of PAWC-WD's current wastewater tariff includes a definition for EDU that references 25 Pa. Code § 73.17 and "the typical estimated average daily wastewater flow from a current single-family unit." Also, the Application's Appendix A, APA, indicated that an entity named Citterio is billed at $85 per month per EDU based upon water consumption provided by the Authority and divided by 260 gallons per day (GPD) per EDU. Please provide responses for each of the following:

a. Provide a chart listing each of Foster's current EDU allocation classifications (EDU Classes).

Response: Please refer to TUS-A-11-a_Attachment 1.

b. Compare the number of EDUs that Foster allocates to each EDU Class with PAWC-WD's proposed EDU allocations for Foster customers.

Response: PAWC-WD intends to adopt the EDU allocations used by Foster for all existing customers.

c. Explain whether differences in how Foster determines EDUs and how PAWC-WD intends to determine EDUs will result in any increase or decrease in customer bills.

Response: Based on PAWC-WD's preliminary analysis, there are no significant differences between the EDU calculations used by Foster and PAWC-WD. The EDU allocations assigned to existing customers were determined through the municipal planning process. When new customers connect to the system, PAWC-WD will determine new EDU allocations pursuant to page 21 of its tariff.

Pennsylvania-American Water Company's Responses to
the Bureau of Technical Utility Services
Water/Wastewater Division
Data Request Set 1

Docket No. A-2021-3028676

Application of Pennsylvania-American Water Company-Wastewater Division for approval of the rights to: (1) acquire, by sale, certain wastewater system assets of Foster Township; and (2) begin to offer, render, furnish and supply wastewater service to the public in portions of Foster Township, Luzerne County, Pennsylvania

d. Provide a copy of the contract or agreement that PAWC-WD will enter into with the Authority to continue receiving water consumption data to bill Citterio, or if PAWC-WD will not enter into a contract or agreement with the Authority to continue receiving water consumption data to bill Citterio, explain any differences in how Foster determines charges for service rendered to Citterio compared with how PAWC-WD will determine charges for service rendered to Citterio.

Response: No contract or agreement has been executed to date. PAWC-WD intends to engage in discussions with Citterio and its water providers to develop a plan for obtaining water consumption data. If a contract or agreement is required, it will be provided to the Commission and executed prior to closing.

For response to a
Name: Brittany Majewski
Title: Municipal Secretary Foster Township

For responses to b, c and d
Name: Michael Salvo
Title: Senior Manager, Business Development

ORDINANCE NO. 4 of 2016
FOSTER TOWNSHIP, LUZERNE COUNTY, PENNSYLVANIA
SEWER SYSTEM RULES AND REGULATIONS

AN ORDINANCE OF FOSTER TOWNSHIP, LUZERNE COUNTY, PENNSYLVANIA, AMENDING THE FOSTER TOWNSHIP SEWER SYSTEM RULES AND REGULATIONS, ORDINANCE NO. 1-2012, ADOPTED DECEMBER 2012 TO AMONG OTHER THINGS REVISE APPENDIX D RELATING TO EDU ALLOCATIONS

Under the Authority vested in the Foster Township Board of Supervisors pursuant to Article XVI of the Second Class Township Code, Section 1601 (a), which permits the Board of Supervisors to amend any ordinance that it has previously adopted, the Board of Supervisors does hereby amend Ordinance No. 1 of 2012 known as the "Sewer System Rules and Regulations" to revised Appendix D, EDU Allocations, with other minor revisions, a copy of which is incorporated herein by reference with its authority to do so under Section 1522 of the Second Class Township Code.

This Ordinance amends the current Foster Township Sewer System Rules and Regulations effective the date of enactment, as set forth below.

This Ordinance is hereby adopted this 17th day of November, 2016.

ATTEST:

Secretary/Treasurer

FOSTER TOWNSHIP SUPERVISORS:

Chairperson

Vice-Chairperson

Secretary/Treasurer

APPENDIX D
EDU ALLOCATIONS

EDU's shall be generally assigned as described below or as amended from time to time by the Township. However, the Township reserves the right to deviate from the allocations described below at its discretion based upon anticipated use:

CLASSIFICATION	BILLING UNIT
DOMESTIC ESTABLISHMENTS	
Domestic Consumer Unit	1 EDU per 4 bedrooms 0.5 EDU each additional 2 bedrooms
COMMERCIAL ESTABLISHMENTS	
Each restaurant, bar room or other Commercial Establishment which regularly dispenses food and/or beverages for consumption on the Premises	2 EDU per 50 seats, which are regularly intended for customer use 1 EDU each additional 15 seats or fraction thereof
Each Retail Store with meat, vegetables, bakery, etc. food preparation facility	1 EDU per food preparation station
Each Car Wash	2 EDUs per Car Wash Bay
Each Laundromat	1 EDU per 3 washers
Each Motel or Hotel (1)	1.5 EDU per first 4 rental rooms 1 EDU per each 4 additional rooms of fraction thereof
Funeral Home	1 EDU each property
Beauty Parlor or Barber Shop	1 EDU per 2 chairs 0.5 EDU per each additional chair
All other establishments not separately classified above, and not constituting a combination Domestic Consumer Unit and Commercial Establishment (2)	1 EDU (minimum), or 1 EDU per public restroom plus 1 EDU per 5 employees or fraction thereof, or EDUs at the discretion of the Township based upon actual use

COMBINATION DOMESTIC/COMMERCIAL ESTABLISHMENTS	
Combination Domestic Establishment and Commercial Establishment located in one structure and/or property and owned, occupied and operated by the same person; provided, however, that this subsection shall not be applicable in those cases where the Commercial Establishment regularly dispenses food and/or beverages for consumption on the premises	1 EDU (minimum), or Additional EDUs at the discretion of the Township based upon actual use
INDUSTRIAL ESTABLISHMENTS	
Industrial Establishment	Metered Rate
INSTITUTIONAL ESTABLISHMENTS	
School	1 EDU per 10 students, faculty, and staff
Boarding School (3)	1 EDU per 3 students
Convalescent homes and similar establishments (3)	0.5 EDU per bed
Fire House with Social Hall	1.5 EDU
Church	1 EDU or 1.5 EDU with Social Hall
Medical Center	1 EDU per Doctor/Dentist 1 EDU per every 2 beds
Mobile (Manufactured) Home Park	1 EDU per Pad (whether or not occupied)

Notes:

1. Provided however that where a business of a restaurant or bar room is conducted in connection with any motel or hotel, and additional and separate sewer rental or charge shall be made payable as defined herein subject to minimum of 1 EDU.

2. This sewer rental or charge shall be computed on the basis of the average daily number of employees for the month immediately preceding the date of the bill.

3. Each school, public or private, per student based upon the daily average number of students enrolled on days when the school was in session during the immediately preceding full school term. Employees shall be classified as students. Please note that the Township considers day cares, pre-school, and similar establishments to be considered schools as listed within the Institutional Establishments.

ORDINANCE NO 5 OF 2016
FOSTER TOWNSHIP, LUZERNE COUNTY, PENNSYLVANIA

AN ORDINANCE OF FOSTER TOWNSHIP, LUZERNE COUNTY, PENNSYLVANIA, AMENDING ORDINANCE NO. 1 OF 2013, SEWER SYSTEM RULES AND REGULATIONS ORDINANCE, TO ADDRESS VACATION HOME RENTALS.

The Supervisors of Foster Township do hereby adopt the following amendments to Ordinance No. 1 of 2013 by:

Adding the following term under Appendix "A", Definitions:

Vacation Home Rental: Any dwelling unit within a residential dwelling structure rented for the purpose of overnight lodging for a period of not less than one (1) day and not more than thirty (30) days.

Adding the following under Appendix "D", EDU Allocations:

COMMERCIAL ESTABLISHMENTS

VACATION HOME RENTAL	1 EDU per 1-4 bedrooms advertised or rented 1 EDU each additional bedroom advertised or rented

This Amendment shall take effect immediately following its adoption.

The remaining Articles and Sections of the Foster Township Sewer System Rules and Regulations Ordinance and the corresponding Sewer System Rules and Regulations shall remain the same and unchanged, except as amended by this Ordinance.

This Ordinance Amendment is hereby adopted this 14th day of December, 2016.

[Signatures submitted on the following page.]

ATTEST:

Brittany Majewski

Secretary

FOSTER TOWNSHIP BOARD OF SUPERVISORS:

Gail J Bryan

Chairperson

Ryan Chukich

Vice-Chairperson

J Eckrote Jones

Supervisor

Pennsylvania-American Water Company's Responses to
the Bureau of Technical Utility Services
Water/Wastewater Division
Data Request Set 1

Docket No. A-2021-3028676

Application of Pennsylvania-American Water Company-Wastewater Division for approval of the rights to: (1) acquire, by sale, certain wastewater system assets of Foster Township; and (2) begin to offer, render, furnish and supply wastewater service to the public in portions of Foster Township, Luzerne County, Pennsylvania

A-12. The Application's Appendix H contained a document titled "Consolidated Balance Sheet of Foster Township - West End System" ending December 31, 2020 that did not provide any numerical breakdown for the balance sheet of Foster's West End System. PAWC indicated Foster only produces audited financial statements for the consolidated wastewater system. Please provide a copy of Foster's audited financial statements for its consolidated wastewater systems for the period ending December 31, 2020 and quantify the number of EDUs served by Foster outside of the West End System.

Response: Please see TUS-A-12_Attachment 1. There are 449 EDUs associated with Foster Township's East End System.

Name: Brittany Majewski
Title: Municipal Secretary Foster Township

FOSTER TOWNSHIP
LUZERNE COUNTY, PENNSYLVANIA

FINANCIAL STATEMENTS

DECEMBER 31, 2020

Grevera & Associates
Certified Public Accountants & Consultants

FOSTER TOWNSHIP, PENNSYLVANIA
DECEMBER 31, 2020

TABLE OF CONTENTS

	Page(s)
INDEPENDENT AUDITORS' REPORT	1-2
FINANCIAL STATEMENTS:	
Statement of Net Position	3
Statement of Activities	4
Governmental Fund Balance Sheet	5
Reconciliation of the Governmental Fund Balance to the Statement of Net Position	6
Governmental Fund Statement of Revenue, Expenditures and Change in Fund Balance	7
Reconciliation of Net Change in Governmental Fund Balance to the Change in Net Position	8
Statement of Net Position- Proprietary Fund	9
Statement of Revenues, Expenditures and Change in Fund Net Position - Proprietary Fund	10
Statement of Cash Flows-Proprietary Fund	11
NOTES TO FINANCIAL STATEMENTS	12-24

Grevera & Associates
Certified Public Accountants & Consultants

400 THIRD AVENUE
SUITE 317
KINGSTON, PA 18704-5892

PHONE: (570) 287-4712
FAX: (570) 287-4714

INDEPENDENT AUDITORS' REPORT

Township Supervisors
Foster Township
Luzerne County, Pennsylvania

We have audited the accompanying financial statements of the governmental activities, the business-type activities, each major fund, and the aggregate remaining fund information of Foster Township of Luzerne County, Pennsylvania, as of and for the year ended December 31, 2020, and the related notes to the financial statements, which collectively comprise the Township's basic financial statements as listed in the table of contents.

Management's Responsibility for the Financial Statements

Management is responsible for the preparation and fair presentation of these financial statements in accordance with accounting principles generally accepted in the United States of America; this includes the design, implementation, and maintenance of internal control relevant to the preparation and fair presentation of financial statements that are free from material misstatement, whether due to fraud or error.

Auditor's Responsibility

Our responsibility is to express opinions on these financial statements based on our audit. We conducted our audit in accordance with auditing standards generally accepted in the United States of America. Those standards require that we plan and perform the audit to obtain reasonable assurance about whether the financial statements are free of material misstatement.

An audit involves performing procedures to obtain audit evidence about the amounts and disclosures in the financial statements. The procedures selected depend on the auditor's judgement, including the assessment of the risks of material misstatement of the financial statements, whether due to fraud or error. In making those risk assessments, the auditor considers internal control relevant to the entity's preparation and fair presentation of the financial statements in order to design audit procedures that are appropriate in the circumstances, but not for the purpose of expressing an opinion on the effectiveness of the entity's internal control. Accordingly, we express no such opinion. An audit also includes evaluating the appropriateness of accounting policies used and the reasonableness of significant accounting estimates made by management, as well as evaluating the overall presentation of the financial statements.

We believe that the audit evidence we have obtained is sufficient and appropriate to provide a basis for our audit opinions.

Township Supervisors
Foster Township
Luzerne County, Pennsylvania

Basis for Adverse Opinion on Governmental Activities

As discussed in Note 1 to the financial statements, management has not recorded all capital assets in the governmental activities and, accordingly, has not recorded depreciation expense on those assets. Accounting principles generally accepted in the United States of America require that those assets be capitalized and depreciated, which would increase the assets, net position, and expenses of the governmental activities. The amount by which this departure affects assets, net position and expenses of the governmental activities has not been determined.

Adverse Opinion on Governmental Activities

In our opinion, because of the significance of the matter discussed in the "Basis for Adverse Opinion on Governmental Activities" paragraph, the financial statements referred to previously do not present fairly, the financial position of the governmental activities of Foster Township as of December 31, 2020, or the changes in financial position thereof for the year then ended.

Unmodified Opinions

In our opinion, the financial statements referred to above present fairly, in all material respects, the respective financial position of the business-type activities, each major fund, and the aggregate remaining fund information of Foster Township of Luzerne County, Pennsylvania, as of December 31, 2020, and the respective changes in financial position and cash flows thereof for the year then ended in conformity with the accounting principles generally accepted in the United States of America.

Other Matters

Required Supplementary Information

Management had omitted a management discussion and analysis and budgetary comparison information that accounting principles generally accepted in the United States of America require to be presented to supplement the basic financial statements. Such missing information, although not a part of the basic financial statements, is required by the Governmental Accounting Standards Board, who considers it to be an essential part of financial reporting for placing the basic financial statements in an appropriate operational, economic, or historical context. Our opinion on the basic financial statements is not affected by this missing information.

Herera & Associates

Kingston, Pennsylvania
August 30, 2021

FOSTER TOWNSHIP
STATEMENT OF NET POSITION
DECEMBER 31, 2020

ASSETS

	Governmental Activities	Business-Type Activity	Total
CURRENT ASSETS:			
Cash	$ 182,952	$ 263,850	$ 446,802
Restricted cash	276,107		276,107
Taxes receivable	42,959		42,959
Accounts receivable, net	28,119	44,429	72,548
Due from other governments	47,372		47,372
Total current assets	577,509	308,279	885,788
CAPITAL ASSETS:			
Non-depreciable		24,526	24,526
Depreciable improvements and equipment, net	668,743	9,956,425	10,625,168
Total capital assets	668,743	9,980,951	10,649,694
DEFERRED OUTFLOW OF RESOURCES:			
Bond issuance costs and discount		163,202	163,202
Total assets	$ 1,246,252	$ 10,452,432	$ 11,698,684

LIABILITIES

CURRENT LIABILITIES:			
Accounts payable	$ 21,764	$ 88,361	$ 110,125
Accrued expenses	18,947		18,947
Current portion of long-term debt	39,480	489,184	528,664
Total current liabilities	80,191	577,545	657,736
Long term debt, net of current portion	30,750	6,286,281	6,317,031
Total liabilities	110,941	6,863,826	6,974,767

NET POSITION

Investment in capital assets, net of related debt	598,513	3,205,486	3,803,999
Restricted	264,531		264,531
Unrestricted	272,267	383,120	655,387
Total net position	1,135,311	3,588,606	4,723,917
Total liabilities and net position	$ 1,246,252	$ 10,452,432	$ 11,698,684

See Notes to Financial Statements

FOSTER TOWNSHIP
STATEMENT OF ACTIVITIES
YEAR ENDED DECEMBER 31, 2020

FUNCTIONS/PROGRAMS:	EXPENSES	CHARGES FOR SERVICES	CAPITAL GRANTS AND CONTRIBUTIONS	TOTAL REVENUES	GOVERNMENTAL ACTIVITIES	BUSINESS-TYPE ACTIVITY
Governmental activities:						
General government - administrative	$ (301,207)	$ 64,144	$ 59,330	$ 123,474	(177,733)	
Public safety	(47,990)	3,389	17,937	21,326	(26,664)	
Conservation and development			4,290	4,290	4,290	
Culture and recreation	(41,962)			-	(41,962)	
Public works projects	(402,370)		158,963	158,963	(243,407)	
Total governmental activities	(793,529)	67,533	240,520	308,053	(485,476)	
Business-type activities	(1,496,821)	1,294,453		1,294,453		$ (202,368)
Total	$ (2,290,350)	$ 1,361,986	$ 240,520	$ 1,602,506	(485,476)	(202,368)
General revenues:						
Tax revenues					554,385	
Operating transfers					(7,144)	7,144
Interest revenue					1,074	361
Total general revenues and transfers					548,315	7,505
Change in net position					62,839	(194,863)
Net position, beginning					1,072,472	3,783,469
Net position, ending					$ 1,135,311	$ 3,588,606

See Notes to Financial Statements

FOSTER TOWNSHIP
GOVERNMENTAL FUND BALANCE SHEET
DECEMBER 31, 2020

	GENERAL FUND	HIGHWAY FUND	NON-MAJOR FUNDS	TOTAL
ASSETS:				
Cash and cash equivalents	$ 182,952		$ 103,759	$ 286,711
Restricted cash		$ 172,032	$ 316	172,348
Taxes receivable	18,181		24,778	42,959
Accounts receivable	28,119			28,119
Due from other governments	47,372			47,372
Total assets	$ 276,624	$ 172,032	$ 128,853	$ 577,509
LIABILITIES:				
Accounts payable	$ 9,151	$ 12,231	$ 382	$ 21,764
Payroll taxes payable	18,947			18,947
Total liabilities	28,098	12,231	382	40,711
DEFERRED INFLOWS OF RESOURCES - Unavailable				
Property taxes	13,406		23,741	37,147
FUND BALANCE:				
Restricted		159,801	104,414	264,215
Unassigned	235,120		316	235,436
Total fund balance	235,120	159,801	104,730	499,651
TOTAL LIABILITIES, DEFERRED INFLOWS AND FUND BALANCES	$ 276,624	$ 172,032	$ 128,853	$ 577,509

See Notes to Financial Statements

FOSTER TOWNSHIP
RECONCILIATION OF THE GOVERNMENTAL FUND BALANCE TO THE STATEMENT OF NET POSITION
DECEMBER 31, 2020

Total Governmental Fund Balance		$ 499,651
Amounts reported in the statement of net position are different because:		
Capital assets used in governmental activities are not financial resources and therefore are not reported as assets in governmental funds.		
Capital assets	$ 1,322,735	
Accumulated depreciation	(653,992)	668,743
Certain revenues are not available to pay for current-period expenditures and therefore are reported as deferred inflows of resources in the funds.		37,147
Long-term obligations are not due and payable in the current period and, therefore, are not reported as liabilities in the funds.		(70,230)
Total Net Position - Governmental Activities		$ 1,135,311

See Notes to Financial Statements

FOSTER TOWNSHIP
GOVERNMENTAL FUND STATEMENT OF REVENUE, EXPENDITURES AND CHANGE IN FUND BALANCE
FOR THE YEAR ENDED DECEMBER 31, 2020

	GENERAL FUND	HIGHWAY FUND	NON-MAJOR FUNDS	TOTAL
Revenue:				
Taxes	$ 495,128		$ 62,006	$ 557,134
Grants	81,557	$ 158,963		240,520
Licenses and permits	28,119			28,119
Charges for services	35,748			35,748
Interest received	367	476	231	1,074
Fines and forfeits	3,389			3,389
Proceeds from long-term debt		89,498		89,498
Miscellaneous	277			277
Total revenue	644,585	248,937	62,237	955,759
Expenditures:				
Public works	235,004	148,213	55,613	438,830
General government-administrative	204,692			204,692
Unallocated benefits and insurance	73,494			73,494
Public safety	36,256		32,696	68,952
Culture and recreation	2,719			2,719
Capital outlay	110,132			110,132
Other	128			128
Total expenditures	662,425	148,213	88,309	898,947
Excess (deficiency) of revenue over expenditures:	(17,840)	100,724	(26,072)	56,812
Other financing sources (uses):				
Transfers in	89,498		6,700	96,198
Transfers out	(13,844)	(89,498)		(103,342)
Total other financing sources (uses)	75,654	(89,498)	6,700	(7,144)
Net change in fund balance	57,814	11,226	(19,372)	49,668
Fund balance, beginning	177,306	148,575	124,102	449,983
Fund balance, ending	$ 235,120	$ 159,801	$ 104,730	$ 499,651

See Notes to Financial Statements

FOSTER TOWNSHIP
RECONCILIATION OF NET CHANGE IN GOVERNMENTAL FUND BALANCE TO THE CHANGE IN NET POSITION FOR THE YEAR ENDED DECEMBER 31, 2020

Net Change in Governmental Fund Balance		$ 49,668
Amounts reported in the statement of activities are different because:		
Proceeds from long-term debt incurred are recorded as revenue on the statement of change in governmental fund balance but are not but are not as revenue on the statement of activities.		(89,498)
Payments of long-term debt principal are considered a use of current financial resources and are reported in the statement of change in governmental fund balance but not on the statement of activities.		86,136
Capital outlays to purchase or build capital assets are reported in the governmental fund as expenditures. However, for governmental activities, those costs are shown in the statement of net position and are allocated over their estimated useful lives. This is the amount by which depreciation expense exceeds capital outlays for period.		
Depreciation expense	$ (90,851)	
Capital expenditures	110,132	19,281
In the statement of change in governmental fund balance, non-exchange revenue is only recognized when measureable and available. Therefore, property taxes collected after sixty days of the balance sheet date are not recognized as revenue until the period collected. This amount is the net change in revenue accrued between the prior and current year.		(2,748)
Change in Net Position - Governmental Activities		$ 62,839

See Notes to Financial Statements

FOSTER TOWNSHIP
STATEMENT OF NET POSITION-PROPRIETARY FUND
DECEMBER 31, 2020

ASSETS

	Business-Type Activity Waste Water Fund
CURRENT ASSETS:	
Cash	$ 263,850
Accounts receivable, net	44,429
Total current assets	308,279
CAPITAL ASSETS:	
Non-depreciable	24,526
Depreciable improvements and equipment, net	9,956,425
Total capital assets	9,980,951
DEFERRED OUTFLOW OF RESOURCES:	
Bond issuance costs and discount	163,202
Total assets and deferred outflows of resources	$ 10,452,432

LIABILITIES

CURRENT LIABILITIES:	
Accounts payable	$ 88,361
Current portion of long-term debt	489,184
Total current liabilities	577,545
LONG-TERM LIABILITIES:	
Bond payable, net of current portion	6,286,281
Total Liabilities	6,863,826

NET POSITION

Investment in capital assets, net of related debt	3,205,486
Unrestricted	383,120
Total net position	3,588,606
Total liabilities and net position	$ 10,452,432

See Notes to Financial Statements

FOSTER TOWNSHIP
STATEMENT OF REVENUES, EXPENDITURES AND CHANGE IN NET POSITION - PROPRIETARY FUND
YEAR ENDED DECEMBER 31, 2020

	Business-Type Activity Waste Water Fund
OPERATING REVENUES	$ 1,294,453
OPERATING EXPENDITURES	1,355,842
OPERATING LOSS	(61,389)
NON-OPERATING REVENUES (EXPENSES)	
Debt service-interest, bond discount and issuance costs	(140,979)
Transfers in	7,144
Interest income	361
Total non-operating revenue, net	(133,474)
CHANGE IN NET POSITION	(194,863)
NET POSITION - Beginning	3,783,469
NET POSITION - Ending	$ 3,588,606

See Notes to Financial Statements

FOSTER TOWNSHIP
STATEMENT OF CASH FLOWS-PROPRIETARY FUND
YEAR ENDED DECEMBER 31, 2020

Cash flows from operating activities:	
Cash received from sewage fees	$ 1,321,353
Cash paid for pumping, disposal, sanitation and treatment	(680,110)
Cash paid for other operating expenses	(21,891)
Net cash provided by operating activities	619,352
Cash flows from capital and related financing activities:	
Interest on long-term debt	(140,979)
Payments of long-term debt principal	(385,498)
Operating transfer in, net	7,144
Net cash provided by capital and related financing activities	(519,333)
Cash flows from investing activities:	
Interest received	361
Net cash provided by investing activities	361
Net decrease in cash and cash equivalents	100,380
Cash and cash equivalents, beginning	163,470
Cash and cash equivalents, ending	$ 263,850
Cash flows from operating activities:	
Operating loss	$ (61,389)
Adjustments to reconcile operating loss to net cash provided by operating activities:	
Depreciation expense	622,277
Change in assets and liabilities:	
Accounts receivable	26,900
Deferred outflows of resources	6,276
Accounts payable	25,288
Net cash provided by operating activities	$ 619,352

See Notes to Financial Statements

FOSTER TOWNSHIP
NOTES TO FINANCIAL STATEMENTS
DECEMBER 31, 2020

1. Summary of significant accounting policies:

Reporting entity:

Foster Township operates as a second class township under a council form of government and provides the following services as authorized by its charter: general administration, public safety, highways and streets, wastewater treatment, culture and recreation as well as planning and zoning.

Basis of presentation:

The accounting policies of Foster Township conform to generally accepted accounting principles for local government units. The Governmental Accounting Standards Board (GASB) is the authoritative standard-setting body for the establishment of governmental accounting and financial reporting principles.

The accounts of Foster Township are organized and operated on a fund basis. A fund is described as a fiscal and accounting entity with a self-balancing set of accounts where cash and other financial resources are recorded, together with all related liabilities and residual equities or balances, and changes therein, all of which are segregated for the purpose of carrying on specific activities or attaining certain objectives in accordance with special regulations, restrictions or limitations.

The Township's financial statements include both government-wide (reporting the Program as a whole) and fund financial statements. Both the government-wide and fund financial statements categorize primary activities as either governmental or business-type. Fiduciary funds are excluded from government-wide financial statements.

Government-Wide Financial Statements:

The government-wide financial statements include a Statement of Net Position and a Statement of Activities. These statements are presented on an economic resources measurement focus and the accrual basis of accounting. Accordingly, all of the Township's assets and liabilities, including capital assets, and long-term liabilities, are included in the accompanying Statement of Net Position. The Statement of Activities presents changes in net position. Under the accrual basis of accounting, revenues are recognized in the accounting period which they are earned and become measurable without regard to availability, and expenses are recognized in the period incurred, if measurable.

Fund Financial Statements:

Fund financial statements include a Balance Sheet and a Statement of Revenues, Expenditures and Changes in Fund Balance. An accompanying schedule is presented to reconcile and explain the differences in governmental fund balances as presented in these statements to the net assets presented in the government -

1. Summary of significant accounting policies (continued):

Fund Financial Statements (continued):

wide financial statements. The governmental fund financial statements are presented using a current financial resources measurement focus and the modified accrual basis of accounting. With this measurement focus, only current assets and current liabilities are included on the balance sheet.

Under the modified accrual basis of accounting, revenues are recorded when susceptible to accrual; both measurable and available. "Measurable" means the amount of the transaction can be determined and "available" means collectible within the current period or soon enough thereafter to pay liabilities of the current period. Those revenues susceptible to accrual are federal and state grants. Grant revenues are considered earned and are accrued simultaneously with the qualifying grant expenditures. Client fees and other program income funds are not susceptible to accrual. Expenditures are recognized when the related liability is incurred, if measurable.

Governmental Fund Types:

General Fund - The general fund accounts for the general operations of the Township and all the transactions not accounted for in other funds.

Special Revenue Funds - Special revenue funds are used to account for specific revenue sources that are legally restricted to expenditures for specified purposes. The Township uses the following special revenue funds:

Grant Fund - The Grant fund is used to account for specific revenue sources that are restricted to expenditures related to the sewage project in previous years.

Highway Fund - The Highway fund accounts for the state aid received for the specified and restricted purpose of building and improving roads and bridges.

Non-major Funds - Non-major funds consist of special revenue funds which are used to account for specific revenue sources that are restricted expenditures for Specified purposes.

Proprietary Fund Type:

Proprietary funds account for the operations of the Township that are financed and operated in a manner similar to those often found in the private sector.

Waste Water Fund - The enterprise fund accounts for the operation of the sewer system. The enterprise fund distinguishes between operating revenues and expenses and nonoperating items. Operating revenues consist of charges for the use of the sewer

FOSTER TOWNSHIP
NOTES TO FINANCIAL STATEMENTS
DECEMBER 31, 2020

1. **Summary of significant accounting policies (continued):**

Proprietary Fund Type (continued):

system. Operating expenses are costs incurred in operating the system and depreciation. All other revenues and expenses are reported as nonoperating.

Due to and from other funds:

Interfund receivables and payables arise from interfund transactions and are recorded by all funds affected in the period in which transactions are executed.

Cash and cash equivalents:

Foster Township considers all highly liquid investments with a maturity of three months or less when purchased to be cash equivalents.

Inventory of supplies:

All purchases of supplies are budgeted expenditures for the year in which they are purchased and accordingly have been treated as expenditures of that year.

Taxes and Accounts Receivable:

Taxes and accounts receivable in the government-wide, governmental-fund, and proprietary fund financial statements are shown at the total amount due. Taxes receivable not collected within 60 days are offset by deferred inflows of resources on the government-fund financial statements. Management believes all taxes receivable are fully collectible. Accordingly, no allowance for doubtful accounts is considered necessary for taxes receivable. However, after an evaluation of outstanding sewer fees receivable, on the proprietary fund, management has established an allowance for doubtful accounts of $66,862 for wastewater fees receivable at December 31, 2020.

Capital assets:

General capital assets result from expenditures of governmental funds. These assets are reported in the governmental activities column of the government-wide statement of net position but are not reported in the governmental-fund balance sheet. Capital assets used by the enterprise fund are reported in the business-type activity column of the government-wide statement of net position.

The Township has not capitalized and depreciated assets which were acquired prior to January 1, 2008, with the exception of a Wheel Loader which was acquired through a capital lease in 2003. This policy is not in accordance with accounting principles generally accepted in the United States of America which require that all capital assets (excluding some infrastructure capital assets) be capitalized and depreciated.

FOSTER TOWNSHIP
NOTES TO FINANCIAL STATEMENTS
DECEMBER 31, 2020

1. Summary of significant accounting policies (continued):

Capital assets (continued):

The Township's assets are capitalized at historical costs or estimated historical cost. Township policy has set the capitalization threshold for reporting general capital assets at $5,000 and infrastructure at $10,000. The Township defines infrastructure as the basic physical assets that allow the Township to function. These assets include improvements to the street and waste water systems used by the Township to conduct its business.

All capital assets, except land and construction-in-progress, are depreciated. Land is never depreciated. Construction-in-progress costs are accumulated until the project is complete and placed in service. At that time, the costs are transferred to the appropriate asset class and depreciation begins.

Depreciation is recorded on all capital assets on a straight-line basis over the estimated useful lives as follows:

	YEARS
Vehicles	5
Equipment	5-15
Infrastructure	20-30
Building	39

Deferred outflows/inflows of resources:

In addition to assets, the statement of financial position reports a separate section for deferred outflows of resources. This separate financial statement element represents the consumption of net position that applies to a future period and, therefore, will be recognized as an expense in future periods. The Township has one item that qualifies for reporting in this category. The proprietary fund reports deferred outflows of resources from bond issuance costs and bond discount . The deferred outflow of resources will be recognized as a component of interest expense in a systematic manner over the life of the new debt.

In addition to liabilities, the statement of financial position reports a separate section for deferred inflows of resources. This separate financial statement element, deferred inflows of resources, represents an acquisition of net position that applies to a future period and so will not be recognized as an inflow of resources (revenue) until that time. The Township has one item, which arises only under the modified accrual basis of accounting for reporting in this category. These unavailable revenues are reported only in the governmental fund balance sheet. The governmental fund reports unavailable revenues from real estate taxes, cable franchise fees and grants. These amounts are deferred and recognized as an inflow of resources in the period that the amounts become available.

FOSTER TOWNSHIP
NOTES TO FINANCIAL STATEMENTS
DECEMBER 31, 2020

1. Summary of significant accounting policies (continued):

Compensated absences:

Employees earn vacation time after one year of service. Unused vacation time does not carry over to the next year. Employees can accumulate unused sick time leave up to a maximum of sixty days and unused personal time up to a maximum of 10 days. This accumulated time will be paid to the employee upon termination. Management has elected not to calculate the accrual

Budgetary Accounting:

The Township has established the following budgetary procedures:

- At least ninety days prior to adopting the budget, the Township's Board begins the budget for the fiscal year commencing the following January 1. The operating budget includes proposed expenditures and the means of financing them.
- A public hearing is conducted at the municipal building to obtain public comment on the proposed budget.
- Prior to December 31, a motion is made to pass and enact the budget.
- Formal budgetary integration is employed as a management control device during the year for the general fund.
- Budgets are adopted on a cash basis and therefore are not consistent with U.S. generally accepted accounting principles.

Property taxes:

The provisions of the Pennsylvania Revenue and Taxation Code govern assessment, collection and apportionment of real estate taxes. Real and personal property taxes are computed by applying approved property tax rates to the assessed value of properties determined by the County Assessor, in the case of locally assessed property, and by the State Board of Equalization. Property taxes are levied annually, with the exception of supplemental property taxes, which are levied when supplemental assessment events, such as property or new construction, take place.

The total tax on real estate in 2020 was .60 mills. Of this amount, .42 mills were levied for general purposes, .11 mills were levied for the fire company, and .07 mills were levied for the road department.

The current portion of real estate taxes are collected by the Township Tax Collector and submitted to the Township. Delinquent real estate taxes are collected by the County's Tax Claim Office and are remitted to the Township. The County's Tax Assessor. The County's Tax Assessor Office is responsible for establishing assessed values.

FOSTER TOWNSHIP
NOTES TO FINANCIAL STATEMENTS
DECEMBER 31, 2020

1. Summary of significant accounting policies (continued):

Property taxes (continued):

The schedule fo real estate taxes levied each year are as follows:

February 23	Levy Date
February 23 - April 23	2.0% discount period
April 24 - June 22	Face payment period
June 23 - December 31	10% penalty period
January 1	Lien date

Delinquent real estate taxes receivable at December 31, 2020 were approximately $26,493. The Township believes all delinquent taxes receivable to be fully collectible.

Fund equity:

Fund equity at the governmental fund financial reporting level is classified as "fund balance". Fund equity for all other reporting is classified as "net position".

Interfund transactions:

Foster Township had numerous transactions between funds to finance operations, provide services, construct assets and service debt. These Transactions are classified as operating transfer in/out and due from/to other governmental funds. The following illustrations summarize interfund transactions for the year ended December 31, 2020.

The operating transfers between funds for the year ended December 31, 2020 are as follows:

	Transfers In	Transfers Out
General Fund:		
Enterprise fund		$ 7,144
Highway fund	$ 89,498	
Non-major funds		6,700
Highway Fund:		
General fund		89,498
Non-major Funds:		
General fund	6,700	
Enterprise Fund:		
General fund	7,144	
	$103,342	$103,342

FOSTER TOWNSHIP
NOTES TO FINANCIAL STATEMENTS
DECEMBER 31, 2020

1. Summary of significant accounting policies (continued):

Equity classifications:

Government-Wide Financial Statements:

Equity is classified as net position and displayed in three components:

Net investment in capital assets - Consists of capital assets including restricted capital assets, net of accumulated deprecation and reduced by the outstanding balances of any bonds, mortgages, notes or other borrowing that are attributable to the acquisition, construction or improvement of those assets.

Restricted - Consists of net position with constraints placed on the use either by external groups such as creditors, grantors, contributors, or laws or regulations of other government; or law through constitutional provisions or enabling legislation.

Unrestricted - All other elements of net position that do not meet the definition of "restricted" or " net investment in capital assets."

In circumstances when an expenditure is made for a purpose for which both restricted and unrestricted net position is available, the Agency's policy is to first apply restricted resources.

Governmental Fund Financial Statements:

As prescribed by GASB Statement No. 54, Fund Balance Reporting and Governmental Fund Type Definitions, fund balance for governmental funds consists of the following:

Nonspendable Fund Balance - Includes amounts that are not in spendable form, or legally or contractually required to be maintained intact. This includes items that are not expected to be converted to cash, for example: inventories, prepaid amounts, and long-term notes receivable.

Restricted Fund Balance - Includes amounts that are restricted for specific purposes stipulated by external resources provider (creditors, grantors, contributors or laws or regulations of other governments) constitutionally, or through enabling legislation. Restrictions may effectively be changed or lifted only with the consent of resource providers.

1. Summary of significant accounting policies (continued):

Governmental Fund Financial Statements (continued):

Committed Fund Balance - Includes amounts that can only be used for specific purposes determined by a formal action of Foster Township's highest level of decision-making authority, the Supervisors. Commitments may be changed or lifted only the Foster Township Supervisors taking the same formal action that imposed the constraint originally.

Assigned Fund Balance - Includes amounts intended to be used by the Township for specific purposes that are neither restricted nor committed. Intent can be expressed by the Foster Township Supervisors or by an official or body to which the governing body delegates authority.

Unassigned Fund Balance - Includes amounts that are available for any purpose. These amounts are only reported in the general fund.

In circumstances when an expenditure is made for a purpose for which amounts are available in multiple fund balance classification, fund balance is depleted in the order of restricted, committed, assigned and unassigned.

Use of estimates:

The preparation of financial statements requires management to make estimates and assumptions that affect certain reported amounts and disclosures. Accordingly, actual results could differ from those estimates.

2. Cash and cash equivalents:

Pennsylvania statutes provide for investment of governmental funds into certain authorized investment types including United States Treasury bills, other short-term United States and Pennsylvania government bills or obligations, fully collateralized repurchase agreements relating to such obligations, and insured or collateralized time deposits and certificates of deposit.

The deposit and investment policy of Foster Township adheres to state statutes and prudent business practices. Deposits of the Township are either maintained in interest bearing demand deposits, bank money market accounts, savings accounts, or certificates of deposit.

The unrestricted and restricted deposits are insured by the Federal Depository Insurance Corporation up to FDIC limits. The balance was not insured or collateralized in the name of Foster Township, but were collateralized in accordance with Act 72 which requires each institution to pool collateral for all governmental deposits and have the collateral held by an approved custodian in the institution's name.

FOSTER TOWNSHIP
NOTES TO FINANCIAL STATEMENTS
DECEMBER 31, 2020

3. Capital assets:

Capital asset activity for governmental activities for the year ended December 31, 2020 was as follows:

	Beginning Balance	Increases/ Decreases	Ending Balance
Capital assets, being depreciated			
Building	$ 220,336	$ -0-	$ 220,336
Vehicles	359,355	89,498	448,853
Equipment	263,642	20,634	284,276
Infrastructure	369,270	-0-	369,270
Balance, June 30th	1,212,603	110,132	1,322,735
Less: accumulated depreciation			
Building	(35,781)	(5,650)	(41,431)
Vehicles	(219,625)	(34,114)	(253,739)
Equipment	(165,392)	(16,402)	(181,794)
Infrastructure	(142,343)	(34,685)	(177,028)
Total accumulated depreciation	(563,141)	(90,851)	(653,992)
Net Balance, June 30th	$ 649,462	$ 19,281	$ 668,743

Depreciation expense was charged to functions/programs of governmental activities as follows:

Public works	$ 49,676
Culture and recreation	39,243
General administration	1,932
Total depreciation expense	$ 90,851

FOSTER TOWNSHIP
NOTES TO FINANCIAL STATEMENTS
DECEMBER 31, 2020

3. Capital assets (continued):

Capital asset activity for the business-type activity for the year ended December 31, 2020 was as follows:

	Beginning Balance	Increases	Ending Balance
Capital assets not being depreciated	$ 24,526	$ -0-	$ 24,526
Capital assets, being depreciated:			
Pump stations	$ 15,556,914	$ -0-	$15,556,914
Less: accumulated depreciation	(4,978,214)	(622,277)	(5,600,491)
Net Balance, June 30th	$10,578,700	$(622,277)	$ 9,956,423

Depreciation expense for the business-type activities for the year ended December 31, 2020 was $622,277.

4. Long-term debt:

Business-type activities:

At December 31, 2020, the long term debt obligations were as follows:

Note payable to Pennvest requiring monthly payments of $36,299 including interest at 1% until September 2028, the maturity date of the loan. The note is not to exceed $7,664,384 and advances are provided by the lender as requested. Pledged as collateral is a lien on the receipts and revenues of the Woodside Area Sanitation System.

January 1, 2020	Additions	Reductions	December 31, 2020
$ 3,625,963	$ -0-	$(300,498)	$ 3,625,963

General obligation bonds payable requiring semi-annual payments including interest at interest rates of 1.25% to 3.5% until June 2047. Although not pledged or encumbered to secure the Bonds, the Township's intended source of funds to pay the principal and interest on all of the Bonds is the revenue from the Township's sanitary sewer system.

January 1, 2020	Additions	Reductions	December 31, 2020
$ 3,535,000	$ -0-	$(85,000)	$ 3,450,000

FOSTER TOWNSHIP
NOTES TO FINANCIAL STATEMENTS
DECEMBER 31, 2020

4. Long-term debt (continued):

Business-type activities (continued):

The following summarizes the Township's future debt service requirements on the bonds payable as of December 31, 2020:

Year Ended December 31	Principal	Interest	Total
2021	489,184	138,340	627,524
2022	498,244	132,530	630,774
2023	502,345	126,629	628,974
2024	506,488	120,619	627,107
2025	515,672	114,398	630,070
2026-2030	1,773,532	487,036	2,260,568
2031-2035	590,000	375,728	965,728
2036-2040	700,000	270,669	970,669
2041-2045	825,000	139,563	964,563
2046-2047	375,000	13,211	388,211
	$ 6,775,465	$ 1,918,723	$ 8,694,188

Governmental activities:

At December 31, 2020, governmental activities obligations were as follows:

Capital lease obligation payable in forty eight monthly payments of $2,989 including interest at a rate of 2.674%. The Township acquired a 2017 Wheel Loader through a government obligation agreement.

January 1, 2020	Additions	Reductions	December 31, 2020
$ 66,868	$ -0-	$(34,441)	$ 32,427

Capital lease obligation payable in twenty one quarterly payments of $2,318 including interest at a rate of 5.243%. The Township acquired a 2020 GMC Silverado through a government obligation agreement.

January 1, 2020	Additions	Reductions	December 31, 2020
$ -0-	$ 89,498	$(51,695)	$ 37,803

FOSTER TOWNSHIP
NOTES TO FINANCIAL STATEMENTS
DECEMBER 31, 2020

4. Long-term debt (continued):

Governmental activities (continued):

The following summarizes the Township's future debt service requirements on the governmental activities obligations as of December 31, 2020:

Year Ended December 31	Principal	Interest	Total
2021	39,480	2,673	42,153
2022	7,508	1,764	9,272
2023	7,993	1,279	9,272
2024	8,509	763	9,272
2025	6,740	214	6,954
	$ 70,230	$ 6,693	$ 76,923

The Wheel Loader was recorded at a cost of $135,535 and accumulated depreciation as of December 31, 2020 amounted to $41,791. Depreciation expense for 2020 was $13,554.

The GMC Silverado was recorded at a cost of $89,498 and accumulated depreciation as of December 31, 2020 amounted to $4.475. Depreciation expense for 2020 was $4,475.

5. Fund Balance:

The following is a summary of the governmental fund balances of the Township as of December 31, 2020:

General Fund - Unassigned	$ 235,120
Highway Fund - Restricted:	
Roads and bridges	$ 159,801
Non-major Fund-Restricted:	
Specific expenditures	$ 104,414
- Unassigned	$ 316

6. Pension plan:

The employees of the highway/maintenance department of the Township are covered by a pension plan through the Teamsters Local Union No. 491. The Township is required to contribute $240 per employee per month to the Central Pennsylvania Teamsters Pension Fund for each eligible employee.

FOSTER TOWNSHIP
NOTES TO FINANCIAL STATEMENTS
DECEMBER 31, 2020

7. Contingencies:

Legal

Foster Township is involved in pending litigation arising in the normal course of its business. It is management's opinion that the aggregate amount of potential claims pending from actions against the Township would not materially affect it's financial position at December 31, 2020.

Federal and State- Assisted Programs

The Township participates in both state and Federally assisted programs. These programs are subject to program compliance audits by the grantors or other representatives. The Township is potentially liable for any expenditure which may be disallowed pursuant to the terms of these grant programs

8. Subsequent events:

Foster Township entered into a sales agreement dated May 12, 2021 with the Pennsylvania American Water Company for the sale of the Township's West End sewer system. The agreed upon sales price for the West End sewer system is $3,750,000. The closing date of the sale is expected to occur sometime in 2023. The West End sewer system accounts for approximately 44% of the fixed assets held by the proprietary fund of Foster Township.

In preparing these financial statements, Foster Township has evaluated events and transactions for potential recognition or disclosure through the date of the Independent Auditors' Report.

Pennsylvania-American Water Company's Responses to
the Bureau of Technical Utility Services
Water/Wastewater Division
Data Request Set 1

Docket No. A-2021-3028676

Application of Pennsylvania-American Water Company-Wastewater Division for approval of the rights to: (1) acquire, by sale, certain wastewater system assets of Foster Township; and (2) begin to offer, render, furnish and supply wastewater service to the public in portions of Foster Township, Luzerne County, Pennsylvania

A-13. The Application's Appendix Q included signed letters verifying the Application complies with the Foster and Butler Comprehensive Plans. However, the Application is missing a signed verification letter from the Luzerne County Planning Commission regarding the Application's compliance with the Luzerne County Comprehensive Plan. Please provide a signed response from the Luzerne County Planning Commission verifying whether the Application complies with the Luzerne County Comprehensive Plan.

Response: Please see TUS-A-13_Attachment 1.

Name: Michael Salvo
Title: Senior Manager, Business Development

LUZERNE COUNTY
Planning and Zoning
Matthew C. Jones, AICP
Executive Director
Email: matthew.jones@luzernecounty.org
Phone: 570-825-1560 Fax: 570-825-6362

COUNTY of LUZERNE
PENNSYLVANIA
ESTABLISHED 1786

LUZERNE COUNTY
ACTING COUNTY MANAGER
ROMILDA P. CROCAMO, ESQ

Jan. 10, 2022

Michael Salvo, Senior Manager
Pennsylvania American Water Co.
852 Wesley Drive
Mechanicsburg, PA 17055
(via email: michael.salvo@amwater.com)

RE: **Acquisition of Foster Township West End Wastewater System**

Dear Mr. Salvo:

This Department has reviewed the details provided for your proposed project, and it appears *Consistent* with the 2021 Lackawanna-Luzerne Counties Comprehensive Plan as defined by Sections 107; 619.2.a; and 1105.a.3 of Pennsylvania Act 247 of 1968 as reenacted and amended through January 2017.

Please be advised: Foster Township has a municipal zoning ordinance. Any questions regarding municipal comprehensive planning or municipal zoning compliance may be directed to Foster Township as follows:

Foster Township Municipal Government: 570-636-3757
Brittany Majewski, Township Secretary (Foster1@ptd.net)
Brian Maso, Township Zoning Officer: 570-636-3798
1000 Wyoming Ave, Freeland, PA 18224

Attached is the form you requested- to the extent I am authorized to complete it.

Sincerely,

M-C J AICP

Matthew C. Jones, AICP
Executive Director
Luzerne County Dept.
of Planning & Zoning

PENNSYLVANIA
AMERICAN WATER

852 Wesley Drive
Mechacnisburg, PA 17055
717-550-1589 Office
717-554-2700 Cell
michael.salvo@amwter.com
www.amwater.com

August 18, 2021

Mr. Matthew C. Jones, AICP
Executive Director
Luzerne County Planning Commission
200 North River Street
Wilkes-Barre, PA 18711

Re: Pennsylvania -American Water Company application to acquire the Foster Township West End Wastewater System, Luzerne County, Pennsylvania.

Dear Mr. Jones,

Pennsylvania American Water Company (Pennsylvania American Water) will soon be submitting an application under Section 1102 of the Pennsylvania Public Utility Commission (PUC) Code, 66 Pa. C. S. §1329 for the acquisition of Foster Township West End wastewater collection system.

Prior to filing the application, and pursuant to our application filing requirements, we are to request evidence that the filing is consistent with your counties' comprehensive plan, specifically our certificated service territory aligns with your Comprehensive Plan and Zoning. I have attached a map identifying the certificated service territory (bold line) for the existing sewer area for your reference. Additionally, our filing is also consistent with the approved DEP Act 537 Official Sewage Facilities Plan.

Specifically, the PUC requests the County provide a response (yes/no) to the following questions:

1. Are there adopted municipal comprehensive plans for the townships/boroughs involved? Contact Foster Township.
2. Is there an adopted county comprehensive plan? YES
3. Is there an adopted multi-municipal or multi-county comprehensive plan? YES: Multi-County.
4. Is there an adopted county or municipal zoning ordinance or joint municipal zoning ordinance? Municipal? Contact Foster Township. X
   Foster Township has their own zoning. Contact Foster Township.
5. Is the proposed project consistent with these comprehensive plans and/or zoning ordinances? see letter.

6. If the answer is "yes" to any of the above questions, please sign below, or submit a letter, indicating that the application is consistent with the applicable comprehensive plans and zoning ordinances. If not, please provide an explanation.

Would you please review, complete, sign below and return to my attention?

Please feel free to contact me at 717-554-2700 or email at michael.salvo@amwater.com if you have additional questions.

If possible, kindly return as soon as possible.

Sincerely,

Michael Salvo

Michael Salvo
Senior Manager, Business Development

Pennsylvania American Water's application is consistent with the applicable comprehensive plans and zoning ordinances.

Luzerne County Authorized Representative M-C-J AICP

Printed Name/Title Matthew C. Jones, AICP Date 1/10/2022

Please send/e-mail this form to: Michael Salvo at michael.salvo@amwater.com

Executive Director
Luzerne County Dept.
of Planning & Zoning

Pennsylvania-American Water Company's Responses to
the Bureau of Technical Utility Services
Water/Wastewater Division
Data Request Set 1

Docket No. A-2021-3028676

Application of Pennsylvania-American Water Company-Wastewater Division for approval of the rights to: (1) acquire, by sale, certain wastewater system assets of Foster Township; and (2) begin to offer, render, furnish and supply wastewater service to the public in portions of Foster Township, Luzerne County, Pennsylvania

A-14. The Application's Appendix R included a map of the requested service territory within Foster. However, the Application's Appendix F, *pro forma* tariff, Page 8, indicated PAWC-WD is requesting to furnish services to the public in portions of Foster and Butler. Please either explain why Butler is included in the *pro forma* tariff supplement when Butler is not within the requested service territory depicted in the map included in the Application's Appendix R, or provide a revised *pro forma* tariff supplement that removes tariff language regarding Butler.

Response: Please refer to TUS-A-14_Attachment 1 for a revised pro forma tariff removing the references to Butler from the service territory descriptions. Note that this revised tariff also reflects a change to the rates page as discussed in the response to A-17.

Name: Michael Salvo
Title: Senior Manager, Business Development

PENNSYLVANIA-AMERICAN WATER COMPANY
Wastewater Division
(hereinafter referred to as the "Company")
D/B/A
Pennsylvania American Water

RATES, RULES AND REGULATIONS

GOVERNING THE FURNISHINGS OF

WASTEWATER COLLECTION AND DISPOSAL SERVICE

IN CERTAIN MUNICIPALITES AND TERRITORIES LOCATED IN:

ADAMS COUNTY, ALLEGHENY COUNTY, BEAVER COUNTY, BERKS COUNTY,

CHESTER COUNTY, CLARION COUNTY, CUMBERLAND COUNTY, LACKAWANNA COUNTY,

LUZERNE COUNTY, MCKEAN COUNTY, MONROE COUNTY, MONTGOMERY COUNTY, **(C)**

NORTHUMBERLAND COUNTY, PIKE COUNTY, WASHINGTON COUNTY AND YORK COUNTY

ALL IN THE COMMONWEALTH OF PENNSYLVANIA

Issued: **Effective:**

Issued by:
F. Michael Doran, President
Pennsylvania American Water
852 Wesley Drive
Mechanicsburg, PA 17055

https://www.amwater.com/paaw/

NOTICE

This tariff authorizes Pennsylvania American Water Company to furnish wastewater services to the public in portions of Foster Township (and related points of bulk service interconnection), Luzerne County, Pennsylvania.
Refer to Pages 2, 4, 6, 8, 11.X, 18.1 and 73.

LIST OF CHANGES

This tariff supplement authorizes Pennsylvania American Water Company – Wastewater Division, to begin to offer or furnish wastewater service to the public in portions of Foster Township (and related points of bulk service interconnection), Luzerne County, Pennsylvania as ordered by the Pennsylvania Public Utility Commission at Docket No. A-2021-xxxxxx entered xxxxxx.

PENNSYLVANIA-AMERICAN WATER COMPANY

TABLE OF CONTENTS

	Page Number		
Title Page	1	Supplement No. XX	(C)
List of Changes	2	XXXXX Revised Page	(C)
List of Changes (cont'd)	3	First Revised Page	
Table of Contents	4	XXXXX Revised Page	(C)
Table of Contents (cont'd)	5	Third Revised Page	
Table of Contents (cont'd)	6	XXXXX Revised Page	(C)
Reserved Page for Future Use	7	First Revised Page	
List of Territories Served	8	XXXXX Revised Page	(C)
List of Territories Served (cont'd)	9	Third Revised Page	
Reserved Page for Future Use	10	First Revised Page	
Schedule of Rates			
Rate Zone 1 – Metered and Unmetered	11.1	Fourth Revised Page	
Rate Zone 1 – Metered and Unmetered	11.2	Third Revised Page	
Rate Zone 2 – Metered (New Cumberland)	11.3	Third Revised Page	
Rate Zone 3 – Metered and Unmetered (Scranton)	11.4	Third Revised Page	
Rate Zone 4 – Metered and Unmetered (Kane)	11.5	Second Revised Page	
Rate Zone 5 – Metered and Unmetered (Franklin)	11.6	Second Revised Page	
Rate Zone 6 – Metered and Unmetered (McKeesport)	11.7	Second Revised Page	
Rate Zone 6 – Metered and Unmetered (McKeesport)	11.8	Second Revised Page	
Rate Zone 7 – Metered and Unmetered (Sadsbury)	11.9	Second Revised Page	
Rate Zone 8 – Metered and Unmetered (Turbotville)	11.10	Second Revised Page	
Rate Zone 9 – Metered and Unmetered (Exeter)	11.11	Second Revised Page	
Rate Zone 10 – Metered and Unmetered (Royersford)	11.12	Second Revised Page	
Rate Zone XX – Unmetered (Foster)	11.X	Original Page	(C)
Miscellaneous Fees and Charges	12	First Revised Page	
Miscellaneous Fees and Charges (cont'd)	13	First Revised Page	
Miscellaneous Fees and Charges (cont'd)	14	First Revised Page	
Miscellaneous Fees and Charges (cont'd)	15	Fifth Revised Page	
Miscellaneous Fees and Charges (cont'd)	15.1	Original Page	
Low-Income Rider – All Rate Zones – Residential	16	Third Revised Page	
State Tax Adjustment Surcharge (STAS)	17	First Revised Page	
Distribution System Improvement Charge (DSIC)	18.1	XXXXX Revised Page	(C)
DSIC (cont'd)	18.2	First Revised Page	
DSIC (cont'd)	18.3	First Revised Page	
DSIC (cont'd)	18.4	First Revised Page	
Recoupment Surcharge	19	Fourth Revised Page	

(C) means Change

TABLE OF CONTENTS

	Page Number		
Rules and Regulations (cont'd)			
Extension Deposit Agreements Bona Fide (cont'd)	45	First Revised Page	
Extension Deposit Agreements Bona Fide (cont'd)	46	First Revised Page	
Section O – Special Utility Service	47	First Revised Page	
Special Utility Service (cont'd)	48	First Revised Page	
Special Utility Service (cont'd)	49	First Revised Page	
Special Utility Service (cont'd)	50	First Revised Page	
Section P – Grinder Pumps for Paint Elk Wastewater	51	First Revised Page	
Section Q – Liability of Company (General)	52	First Revised Page	
Section R – Wastewater Control Regulations	53	First Revised Page	
Wastewater Control Regulations (cont'd)	54	First Revised Page	
Wastewater Control Regulations (cont'd)	55	First Revised Page	
Section S – Stormwater Connection to Sanitary or Combined Sewer System	56	First Revised Page	
Section T – Industrial Pretreatment Program (Coatesville) (IPP-C)	57	First Revised Page	
IPP-C (cont'd)	58	First Revised Page	
IPP-C (cont'd)	59	First Revised Page	
Section U – Industrial Pretreatment Program (Scranton Area) (All Service Areas under Rate Zones 1 (Except Coatesville), 2, 3, 7-Sadsbury and 8-Turbotville) (IPP-S)	60	Fourth Revised Page	
IPP-S (cont'd)	61	Fourth Revised Page	
IPP-S (cont'd)	62	Fourth Revised Page	
Section V – Industrial Pretreatment Program (McKeesport) (IPP-M)	63	Original Page	
IPP-M (cont'd)	64	Original Page	
IPP-M (cont'd)	65	Original Page	
Section Y – Industrial Pretreatment Program (Exeter) (IPP-E)	66	Original Page	
IPP-M (cont'd)	67	Original Page	
IPP-M (cont'd)	68	Original Page	
Section X - Taxes on Deposits for Construction, Customer Advances and Contributions in Aid of Construction	69	Original Page	
Section Y – Industrial Pretreatment Program (Royersford) (IPP-R)	70	Original Page	
IPP-R (cont'd)	71	Original Page	
IPP-R (cont'd)	72	Original Page	
Section Z – Industrial Pretreatment Program (Foster) (IPP-F)	73	Original Page	(C)

(C) means Change

TERRITORIES SERVED

(By State Region and Company Wastewater System District)
(All territories are subject to Rate Zone 1 unless otherwise noted)

Central Pennsylvania

Fairview District
York County. Portions of Fairview and Newberry Townships.

Foster District – Rate Zone XX **(C)**
Luzerne County. Portions of Foster Township (and related points of bulk service interconnection).

Franklin District – Rate Zone 5
Adams County. Portions of the Townships of Franklin, Hamiltonban and Highland.

McEwensville District
Northumberland County. McEwensville Borough.

New Cumberland District – Rate Zone 2
Cumberland County. The Borough of New Cumberland.

Turbotville District – Rate Zone 8
Northumberland County. Portions of The Borough of Turbotville.

Northeastern Pennsylvania

Northeast District – Lehman Pike, Blue Mountain Lakes, Clean Treatment, and Delaware
Monroe County. Portions of the Townships of Middle Smithfield, Smithfield and Stroud.
Pike County. Portions of Delaware and Lehman Townships.

Pocono District
Monroe County. A portion of Coolbaugh Township.

Scranton Sewer District – Rate Zone 3
Lackawanna County. The City of Scranton and the Borough of Dunmore.

Southeastern Pennsylvania

Coatesville District - *Rate Zone 1 and Rate Zone 7* (Sadsbury Township)
Chester County. The City of Coatesville, the Borough of Parkesburg and portions of the Borough of South Coatesville and portions of the Townships of Caln, East Fallowfield, Highland, Sadsbury, Valley, West Caln and West Sadsbury.

Exeter Sewer District – Rate Zone 9
Berks County. Portions of the Townships of Exeter, Alsace and Lower Alsace (and related points of bulk service interconnection).

Royersford District – Rate Zone 10
Montgomery County. Royersford Borough and portions of Upper Providence Township.

(C) means Change

PENNSYLVANIA-AMERICAN WATER COMPANY

SCHEDULE OF RATES

RATE ZONE XX – UNMETERED

APPLICABILITY

The rates as set forth below will apply in the Foster Township Sewer service territory served under this tariff for service rendered on and after the Effective Date shown at the bottom of this page.

AVAILABILITY

The rates under this schedule are available to customers in all rate classes.

UNMETERED CHARGES

This charge is a flat fee for customers not metered for water consumption.

A Flat Rate per month shall be billed to each unmetered customer as follows:

$85.00 per EDU

Special conveyance-only rate for Butler Township: $15 per EDU per month

PENNSYLVANIA-AMERICAN WATER COMPANY

SCHEDULE OF RATES

DISTRIBUTION SYSTEM IMPROVEMENT CHARGE

In addition to the net charges provided for in this Tariff, a charge of 0.00% will apply to bills rendered on or after the Effective Date shown on the bottom of this page.

This Charge will be applicable to:

All Rate Zones except Rate Zone 4 – Kane, Rate Zone 7 – Sadsbury, Rate Zone 8 – Turbotville, Rate Zone 9 – Exeter, Rate Zone 10 – Royersford and **Rate Zone XX - Foster**. **(C)**

The above charge will be recomputed quarterly using the elements prescribed by the Commission as shown on pages 18.2,18.3 and 18.4 of this tariff.

(C) means Change

RULES AND REGULATIONS

Section X– Industrial Pretreatment Program (Foster Area) (IPP-F)

This Section applies to Industrial and Commercial customers served throughout the Company's service territory under Rate Zone XX of this tariff. All such customers shall comply with the "Industrial Pretreatment Program (Foster-Area)" ("IPP-F"). The currently effective IPP-F will be made available on the Company's website.

Such customers shall be responsible for the charges and fees scheduled below related to the implementation, administration, and enforcement of the IPP-F. Pursuant to the IPP-F, IPP-F fees are set by this tariff. IPP-F fees are separate from and in addition to all other rates chargeable by the Company under this tariff.

The fees as set forth in Schedule IPP-F-1 below will be in effect for customers subject to the IPP-F. Terms are as defined by IPP-F.

SCHEDULE IPP-F-1

1.1. General Fees

1.1.1. Facility Inspection Fee: $250.00 per inspection

1.1.2. Sampling and Analysis Fee: Actual cost of sampling and laboratory analysis plus 25% to cover administrative costs.

1.1.3. Accidental Discharge, Slug Control, and/or Monitoring Fee: Actual cost of response to accidental discharges or discharges of slugs loads, including but not limited to the costs incurred for other actions required to manage such discharges, monitoring and response to such discharges, correction of any resulting contamination or other impacts to the Collection System.

1.1.4. Compliance and Enforcement Fee - Administrative and Legal: Actual cost incurred by the Company for investigation and actions to address a User's non-compliance with the terms of this IPP or any IWDP.

1.1.5. Damage Repair: Actual cost for cleaning, repair, replacement and/or correction of any damage to the Collection System caused or contributed to by a User's discharge.

Pennsylvania-American Water Company's Responses to
the Bureau of Technical Utility Services
Water/Wastewater Division
Data Request Set 1

Docket No. A-2021-3028676

Application of Pennsylvania-American Water Company-Wastewater Division for approval of the rights to: (1) acquire, by sale, certain wastewater system assets of Foster Township; and (2) begin to offer, render, furnish and supply wastewater service to the public in portions of Foster Township, Luzerne County, Pennsylvania

A-15. The Application's Appendix S included a copy of the Joint Official Sewage Facilities Plan Update Revision for Freeland and Foster, Revised December 2013 (2013 Revised Act 537 Plan Update). Please provide a copy of the Pennsylvania Department of Environmental Protection (DEP) letter approving the 2013 Revised Act 537 Plan Update.

Response: Please see TUS-A-15_Attachment 1.

Name: Thomas E. Barna, Jr., P.E.
Title: Penn Eastern Engineers, LLC – Municipal Engineer for Foster Township

pennsylvania
DEPARTMENT OF ENVIRONMENTAL PROTECTION
NORTHEAST REGIONAL OFFICE

December 13, 2013

CERTIFIED MAIL NO. 7012 2210 0001 6329 1867

Ms. Anna Marie Durange, Secretary
Borough of Freeland
P.O. Box C
Freeland, PA 18224

CERTIFIED MAIL NO. 7012 2210 0001 6329 1874

Ms. Georgiann Eckrote-Jones, Secretary
Foster Township
P.O. Box 465
Freeland, PA 18224

Re: Official Sewage Facilities Plan Update Revision
Borough of Freeland, Luzerne County
Foster Township, Luzerne County

Dear Ms. Durange and Ms. Eckrote-Jones:

The Department has reviewed the Official Sewage Facilities Plan Update Revision (Plan) dated August 2012 (received by the Department on December 26, 2012), with additional materials dated July 11, 2013 (received by the Department on July 12, 2013), July 22, 2013 (received by the Department on July 23, 2013), October 18, 2013 (received by the Department on October 18, 2013), December 6, 2013 (received by the Department on December 9, 2013) and December 11, 2013 (received by the Department on December 11, 2013) as submitted by Borton-Lawson Engineering Inc., on behalf of Freeland Borough (Borough), Foster Township (Township) and the Freeland Municipal Authority (Authority).

The Department's review has found that the Plan is acceptable and hereby grants planning approval. This review has also not identified any significant environmental impacts resulting from this proposal.

The Plan's selected construction alternative is Alternative No.4 – Construct Parallel Ten-Inch Force Mains. This alternative proposes the construction of two, ten-inch, PVC force mains (each approximately 4,400 feet in length) between the existing Wyoming Street Pump Station Site and the point at which wastewater flow transitions from pressurized to gravity flow on Highland

Street as shown on the graphic found in Appendix H of the Plan. The alternative further proposes the replacement of approximately 2,600 feet of an existing twelve-inch, gravity wastewater conveyance line, located between the pressure-to-gravity transition point on Highland Street and the Authority's Wastewater Treatment Facility as shown on the graphic found in Appendix H of the Plan. The twelve-inch gravity line will be replaced with a fifteen-inch, PVC gravity wastewater conveyance line, in an alignment shown on the graphic found in Appendix H of the Plan. All of the previously listed construction activities are designed to facilitate the ultimate abandonment of the Authority's existing eight-inch, cast-iron force main that conveys wastewater between the Wyoming Street Pump Station Site and the Authority's wastewater treatment facility.

This planning approval also recognizes the following facilities that were previously constructed by the Authority and/or Township without first receiving explicit sewage planning approval from the Department:

- Replacement of the Authority's only permitted Combined Sewer Overflow (CSO) Point's control and overflow structures at a location adjacent to the existing control and overflow structures, in lieu of locating the control and overflow structures adjacent to the Wyoming Street Pump Station Site.

- Construction of 400,000 gallons of equalization capacity, in lieu of 250,000 gallons of equalization capacity, at the Authority's wastewater treatment facility.

- Decrease, from three to two, in the number of primary clarifier trains at the Authority's wastewater treatment facility.

- The construction of one pump station, in lieu of two pump stations (as proposed in the Borough's and Township's previously approved Official Sewage Facilities Plans) at the Wyoming Street Pump Station Site.

The Plan also calls for the preparation of a Special Study (defined in Section 71.1 of the Department's regulations), as a revision to the Official Sewage Facilities Plans of Freeland Borough and Foster Township. The Special Study will be completed to thoroughly investigate the technical adequacy of the existing Wyoming Street Pump Station (previously constructed and now owned by Foster Township and operated by the Authority) to meet both the Borough's and the Township's long-term wastewater disposal needs. The investigation will include a period of wastewater flow monitoring, as described in the Plan, in both the Authority's and Foster Township's collection/conveyance systems. The Special Study will be prepared and completed, cooperatively, by the Borough, Township and Authority after first meeting with the Department and receiving the requirements for the completion of the Special Study.

While this sewage planning approval correspondence now recognizes the existence of the Township-owned Wyoming Street Pump Station in the configuration described in the Plan, the Department, for sewage planning purposes, does not recognize a rated capacity for the pump

station at this time. Numerous factors discussed in the Plan, with respect to incomplete or non-existent wastewater flow data, justify this position. Until adequate wastewater flow data and subsequent analyses (to be completed as part of the Special Study) fully substantiate the actual capacity of the Wyoming Street Pumping Station and its associated wastewater conveyance and treatment systems, new or additional wastewater flow that is to be conveyed through the Wyoming Street Pump Station will be controlled via sewer connection allocations administered by the Authority and granted by the Department under the terms of the January 13, 2000 Amendment to Consent Order and Adjudication between the Borough, Authority and the Department. The capacity of the Wyoming Street Pump Station shall be indeterminate until the Special Study proposed in the Plan is completed, approved by the Department and its recommended alternative(s) fully implemented.

Implementation of the selected wastewater disposal alternative and operation of the proposed facilities will be performed by the Freeland Municipal Authority in conjunction with the tributary municipalities of Foster and Butler Townships.

Financing of the proposed wastewater conveyance system improvements is to be provided by the United States Department of Agriculture's Rural Development Program.

In accordance with the provisions of the Pennsylvania Sewage Facilities Act, 35 P.S. §750.1-§750.20(a) (Act 537), and Chapter 71 of the Department's regulations (25 Pa. Code Ch. 71), the Department will hold Freeland Borough and Foster Township responsible for the complete and timely implementation of the Plan's selected wastewater disposal alternative, as listed in the Plan and its corresponding Schedule of Implementation.

Please be advised that any additional wastewater-related improvements, additions, deletions or changes outside of those explicitly described in the Plan and its correspondence, must be in compliance with the Department's regulations and be submitted to and approved by the Department in writing.

This approval correspondence covers only the wastewater planning aspects of the selected wastewater disposal alternative as it relates to your municipality's Official Sewage Facilities Plan.

The approved project requires a Water Quality Management Part II Permit for the construction and operation of the proposed sewage facilities. This permit application has been submitted in the name of the Authority. Issuance of a Part II Permit will be based upon a technical evaluation of the permit application and supporting documentation. Starting construction prior to obtaining a Part II Permit is a violation of The Clean Streams Law.

Other Departmental permits may be required for construction if encroachment to streams or wetlands will result. Information regarding the requirements for such permits or approvals can be obtained from the Northeast Regional Office's Waterways and Wetlands Program at the letterhead address or by telephoning 570-826-2511.

Since the Department has approved your Plan, you are now eligible to apply for a fifty (50) percent planning cost reimbursement as provided under Section 6 of the Sewage Facilities Act (Act 537). Please be advised the approval of this Official Plan Revision is not a guarantee of eligibility of planning costs for reimbursement by the Commonwealth pursuant to section 6 (a) of Act 537 and 25 Pa Code, Chapter 71 of the Department's Regulations. A copy of the reimbursement application is enclosed. You are reminded that reimbursement applications must show detailed cost breakdowns of tasks completed or you will place your reimbursement in jeopardy.

Any person aggrieved by this action may appeal, pursuant to Section 4 of the Environmental Hearing Board Act, 35 P.S. Section 7514, and the Administrative Agency Law, 2 Pa. C.S., Chapter 5A, to the Environmental Hearing Board, Second Floor, Rachel Carson State Office Building, 400 Market Street, P.O. Box 8457, Harrisburg, PA 17105-8457, 717-787-3483. TDD users may contact the Board through the Pennsylvania Relay Service, 800-654-5984. Appeals must be filed with the Environmental Hearing Board within 30 days of receipt of written notice of this action unless the appropriate statute provides a different time period. Copies of the appeal form and the Board's rules of practice and procedure may be obtained from the Board. The appeal form and the Board's rules of practice and procedure are also available in Braille or on audiotape from the Secretary to the Board at 717-787-3483. This paragraph does not, in and of itself, create any right of appeal beyond that permitted by applicable statutes and decisional law.

IF YOU WANT TO CHALLENGE THIS ACTION, YOUR APPEAL MUST REACH THE BOARD WITHIN 30 DAYS. YOU DO NOT NEED A LAWYER TO FILE AN APPEAL WITH THE BOARD.

IMPORTANT LEGAL RIGHTS ARE AT STAKE, HOWEVER, SO YOU SHOULD SHOW THIS DOCUMENT TO A LAWYER AT ONCE. IF YOU CANNOT AFFORD A LAWYER, YOU MAY QUALIFY FOR FREE PRO BONO REPRESENTATION. CALL THE SECRETARY TO THE BOARD (717-787-3483) FOR MORE INFORMATION.

Please contact Mr. Scott Novatnak, of my staff, at 570-826-2337, or at snovatnak@pa.gov, if you have any questions.

Sincerely,

Michael J. Brunamonti, P.E.
Program Manager
Clean Water Program

Enclosure: - Application for Act 537 Sewage Facilities Planning Assistance

cc: Ms. Anna Marie Durange, Secretary/Freeland Municipal Authority (w/Enclosure)
Ms. Samantha Albert, P.E., Borton-Lawson Engineering Inc. (w/Enclosure)
Mr. David Kavitski P.E., RDK Engineering Inc. (w/o Enclosure)
Mr. Thomas Barna Jr. P.E., PennEastern Engineers, LLC Inc. (w/o Enclosure)
Ms. Maryanne Petrilla, Township Manager/Butler Township (w/o Enclosure)
Mr. Ronald Briggs, Chairman/Freeland Borough Planning Commission (w/o Enclosure)
Mr. Jeffrey Searfoss, Chairman/Foster Township Planning Commission (w/o Enclosure)
Mr. Paul Feno, Chairman/Butler Township Planning Commission (w/o Enclosure)
Mr. Adrian Merolli, Executive Director/Luzerne Co. Planning Commission (w/o Enclosure)
Mr. Michael Angerson/USDA-Rural Development (w/o Enclosure)
Ms. Carol Collier, Executive Director/Delaware River Basin Commission (w/o Enclosure)

Pennsylvania-American Water Company's Responses to
the Bureau of Technical Utility Services
Water/Wastewater Division
Data Request Set 1

Docket No. A-2021-3028676

Application of Pennsylvania-American Water Company-Wastewater Division for approval of the rights to: (1) acquire, by sale, certain wastewater system assets of Foster Township; and (2) begin to offer, render, furnish and supply wastewater service to the public in portions of Foster Township, Luzerne County, Pennsylvania

A-16. The Application's Appendix S, 2013 Revised Act 537 Plan Update, Appendix A, Figure 2 includes a copy of a Planning Area Map which appears to indicate that the point of interconnection between the Authority's wastewater system and the West End System is adjacent to the New Wyoming Street Pump Station. However, the Application's Appendix S, 2013 Revised Act 537 Plan Update, Appendix C, includes an Overall Key Map which appears to identify an additional interconnection between Foster and the Authority at the intersection of Fern and Luzerne Streets, Manhole 113. Please explain this apparent discrepancy, identify if there are additional interconnections between the West End System and the Authority's system, and state whether these interconnections are metered or unmetered.

Response: The sanitary sewer line from South Street (manhole 75) is an overflow sewer line that extends south within Fern Street towards Luzerne Street (manhole 113). The sewer line is not metered. There are no other interconnections between the West End System and the Authority's system.

Name: Thomas E. Barna, Jr., P.E.
Title: Penn Eastern Engineers, LLC – Municipal Engineer for Foster Township

Pennsylvania-American Water Company's Responses to
the Bureau of Technical Utility Services
Water/Wastewater Division
Data Request Set 1

Docket No. A-2021-3028676

Application of Pennsylvania-American Water Company-Wastewater Division for approval of the rights to: (1) acquire, by sale, certain wastewater system assets of Foster Township; and (2) begin to offer, render, furnish and supply wastewater service to the public in portions of Foster Township, Luzerne County, Pennsylvania

A-17. The Application's Appendix W included PAWC-WD's estimated annual revenues and expenses in connection with serving Foster's customers. Please provide a breakdown of estimated operating revenue by customer class for Foster and separately for Butler either by customer class or by bulk service, as applicable.

Response: Please refer to the chart below for a breakdown of estimated operating revenue by customer class for Foster and Butler. The estimated $10,260 of Butler revenues were inadvertently excluded from Appendix W of the Application. A revised Appendix W is attached as TUS-A-17_Attachment 1 reflecting these revenues.

As demonstrated below and supported by TUS-A-8-b_Attachment 1, the conveyance rate for Butler Township is $15 per EDU per month. The revised pro forma tariff in TUS-A-14_Attachment 1 includes this rate.

	Number of EDUs	Rate	Revenues	Total Revenues
Residential - Foster	507	85.00	517,140	517,140
Commercial - Foster	29	85.00	29,580	29,580
Industrial - Foster	290	85.00	295,800	295,800
Bulk - Butler	57	15.00	10,260	10,260
Total				**842,520**

Name: Michael Salvo
Title: Senior Manager, Business Development

Appendix W (Revised)

Pennsylvania-American Water Company
Estimated Annual Revenues and Expenses of New Service Area
Year 1

Operating Revenues	$	852,780
Operating Expenses		
Operation and Maintenance		252,187
Depreciation and Amortization		87,648
General Taxes and Other		6,695
Total Operating Expenses		346,530
Operating income		506,250
Other Income/(Expenses)		
Other Income/(Expense), Net		-
Interest Expense, Net		(64,715)
Total Other Expenses		(64,715)
Income Before Income Taxes		441,535
Provision for Income Taxes		123,164
Net Income	$	318,371

Pennsylvania-American Water Company's Responses to
the Bureau of Technical Utility Services
Water/Wastewater Division
Data Request Set 1

Docket No. A-2021-3028676

Application of Pennsylvania-American Water Company-Wastewater Division for approval of the rights to: (1) acquire, by sale, certain wastewater system assets of Foster Township; and (2) begin to offer, render, furnish and supply wastewater service to the public in portions of Foster Township, Luzerne County, Pennsylvania

A-18. Please provide copies of bills issued to Foster by the Authority for the Foster's EDU charge for the preceding six (6) months.

Response: Please see TUS-A-18_Attachment 1.

Name: Brittany Majewski
Title: Municipal Secretary Foster Township

Foster Billing as of June 2021

MMI	**18**
Highland	**62**
Upper Lehigh	**67**
Woodside	**127**
Odd Side Fern/Even Side Ridge	**18**
Grove	**184**
Youngstown	**30**
Butler Terrace	**3**
Total:	**509**

509 Units x $39.50=	**$20,105.50**
TOTAL	**$20,105.50**

If your figures vary, please notify us immediately.

$32,429.50

KEEP THIS PORTION FOR YOUR RECORDS
FREELAND MUNICIPAL AUTHORITY
P.O. BOX C, FREELAND, PA 18224

ACCOUNT NUMBER		DATE BILL MAILED
00007003		07/01/2021
PRESENT READING	PREVIOUS READING	UNITS USED
	0	
SERVICE FROM	SERVICE TO	DAYS USED
05/31/2021	06/30/2021	30

Enjoy Your 4th of July
22-0030

SERVICE ADDRESS	DUE DATE
CITTERIO	07/20/2021
DESCRIPTION	AMOUNT DUE
Sewer	$12,324.00
Prev. Balance	$0.00

AMOUNT DUE	AFTER DUE DATE	BY DUE DATE
	$ 12,324.00	$12,324.00

KEEP THIS PORTION FOR YOUR RECORDS
FREELAND MUNICIPAL AUTHORITY
P.O. BOX C, FREELAND, PA 18224

ACCOUNT NUMBER		DATE BILL MAILED
00007004		07/01/2021
PRESENT READING	PREVIOUS READING	UNITS USED
	0	
SERVICE FROM	SERVICE TO	DAYS USED
05/31/2021	06/30/2021	30

Enjoy Your 4th of July
22-0020

SERVICE ADDRESS	DUE DATE
1000 WYOMING AVENUE	07/20/2021
DESCRIPTION	AMOUNT DUE
Sewer	$20,105.50
Prev. Balance	$0.00

AMOUNT DUE	AFTER DUE DATE	BY DUE DATE
	$ 20,105.50	$20,105.50

Foster Billing as of July 2021

MMI	18
Highland	62
Upper Lehigh	67
Woodside	128
Odd Side Fern/Even Side Ridge	18
Grove	184
Youngstown	30
Butler Terrace	3
Total:	510

510 Units x $39.50=	$20,145.00
Johnson-93 Main St Pulled Meter Out Credit 15 days@1.32/day	($19.80)
TOTAL	$20,125.20

If your figures vary, please notify us immediately.

$34,226.70

KEEP THIS PORTION FOR YOUR RECORDS
FREELAND MUNICIPAL AUTHORITY
P.O. BOX C, FREELAND, PA 18224

SERVICE ADDRESS	DUE DATE
1000 WYOMING AVENUE	08/20/2021

ACCOUNT NUMBER		DATE BILL MAILED
00007004		08/01/2021
PRESENT READING	PREVIOUS READING	UNITS USED
	0	
SERVICE FROM	SERVICE TO	DAYS USED
06/30/2021	07/31/2021	31

REMINDER: No Cash Payments Accepted!
22-0020

DESCRIPTION	AMOUNT DUE
Sewer	$20,125.20
Prev. Balance	$0.00

AMOUNT DUE	AFTER DUE DATE	BY DUE DATE
	$ 20,125.20	$20,125.20

KEEP THIS PORTION FOR YOUR RECORDS
FREELAND MUNICIPAL AUTHORITY
P.O. BOX C, FREELAND, PA 18224

SERVICE ADDRESS	DUE DATE
CITTERIO	08/20/2021

ACCOUNT NUMBER		DATE BILL MAILED
00007003		08/01/2021
PRESENT READING	PREVIOUS READING	UNITS USED
	0	
SERVICE FROM	SERVICE TO	DAYS USED
06/30/2021	07/31/2021	31

REMINDER: No Cash Payments Accepted!
22-0030

DESCRIPTION	AMOUNT DUE
Sewer	$14,101.50
Prev. Balance	$0.00

AMOUNT DUE	AFTER DUE DATE	BY DUE DATE
	$ 14,101.50	$14,101.50

Foster Billing as of August 2021

MMI	**18**
Highland	**62**
Upper Lehigh	**66**
Woodside	**126**
Odd Side Fern/Even Side Ridge	**18**
Grove	**184**
Youngstown	**30**
Butler Terrace	**3**
Total:	**507**

507 Units x $39.50= **$20,026.50**

TOTAL **$20,026.50**

If your figures vary, please notify us immediately.

$14,970.50

$34,997.00

KEEP THIS PORTION FOR YOUR RECORDS
FREELAND MUNICIPAL AUTHORITY
P.O. BOX C, FREELAND, PA 18224

SERVICE ADDRESS	DUE DATE
CITTERIO	09/20/2021

ACCOUNT NUMBER	DATE BILL MAILED
00007003	09/01/2021

PRESENT READING	PREVIOUS READING	UNITS USED
	0	

SERVICE FROM	SERVICE TO	DAYS USED
07/31/2021	08/31/2021	31

HAPPY LABOR DAY
22-0030

DESCRIPTION	AMOUNT DUE
Sewer	$14,970.50
Prev. Balance	$0.00

AMOUNT DUE	AFTER DUE DATE	BY DUE DATE
	$ 14,970.50	$14,970.50

KEEP THIS PORTION FOR YOUR RECORDS
FREELAND MUNICIPAL AUTHORITY
P.O. BOX C, FREELAND, PA 18224

SERVICE ADDRESS	DUE DATE
1000 WYOMING AVENUE	09/20/2021

ACCOUNT NUMBER	DATE BILL MAILED
00007004	09/01/2021

PRESENT READING	PREVIOUS READING	UNITS USED
	0	

SERVICE FROM	SERVICE TO	DAYS USED
07/31/2021	08/31/2021	31

HAPPY LABOR DAY
22-0020

DESCRIPTION	AMOUNT DUE
Sewer	$20,026.50
Prev. Balance	$0.00

AMOUNT DUE	AFTER DUE DATE	BY DUE DATE
	$ 20,026.50	$20,026.50

Foster Billing as of September 2021

MMI	18
Highland	62
Upper Lehigh	66
Woodside	126
Odd Side Fern/Even Side Ridge	18
Grove	184
Youngstown	30
Butler Terrace	3
Total:	507

507 Units x $39.50=	$20,026.50
TOTAL	$20,026.50

If your figures vary, please notify us immediately.

$34,957.50

KEEP THIS PORTION FOR YOUR RECORDS
FREELAND MUNICIPAL AUTHORITY
P.O. BOX C, FREELAND, PA 18224

SERVICE ADDRESS	DUE DATE
CITTERIO	10/20/2021

ACCOUNT NUMBER		DATE BILL MAILED
00007003		10/01/2021
PRESENT READING	PREVIOUS READING	UNITS USED
	0	
SERVICE FROM	SERVICE TO	DAYS USED
08/31/2021	09/30/2021	30

Tampered/Frozen/Theft of Meter-$240.00 Fee
22-0030

DESCRIPTION	AMOUNT DUE
Sewer	$14,931.00
Prev. Balance	$0.00

AMOUNT DUE	AFTER DUE DATE	BY DUE DATE
	$ 14,931.00	$14,931.00

KEEP THIS PORTION FOR YOUR RECORDS
FREELAND MUNICIPAL AUTHORITY
P.O. BOX C, FREELAND, PA 18224

SERVICE ADDRESS	DUE DATE
1000 WYOMING AVENUE	10/20/2021

ACCOUNT NUMBER		DATE BILL MAILED
00007004		10/01/2021
PRESENT READING	PREVIOUS READING	UNITS USED
	0	
SERVICE FROM	SERVICE TO	DAYS USED
08/31/2021	09/30/2021	30

Tampered/Frozen/Theft of Meter-$240.00 Fee
22-0020

DESCRIPTION	AMOUNT DUE
Sewer	$20,026.50
Prev. Balance	$0.00

AMOUNT DUE	AFTER DUE DATE	BY DUE DATE
	$ 20,026.50	$20,026.50

Foster Billing as of October 2021

MMI	18
Highland	62
Upper Lehigh	66
Woodside	126
Odd Side Fern/Even Side Ridge	18
Grove	184
Youngstown	30
Butler Terrace	3
Total:	507

507 Units x $39.50=	$20,026.50
Meter Install - 129 Washington Street - 16 days @1.32/day	$21.12
TOTAL	$20,047.62

If your figures vary, please notify us immediately.

$35,215.62

KEEP THIS PORTION FOR YOUR RECORDS
FREELAND MUNICIPAL AUTHORITY
P.O. BOX C, FREELAND, PA 18224

ACCOUNT NUMBER	DATE BILL MAILED
00007003	11/01/2021

PRESENT READING	PREVIOUS READING	UNITS USED
	0	

SERVICE FROM	SERVICE TO	DAYS USED
09/30/2021	10/31/2021	31

Happy Thanksgiving

22-0030

SERVICE ADDRESS	DUE DATE
CITTERIO	11/20/2021

DESCRIPTION	AMOUNT DUE
Sewer	$15,168.00
Prev. Balance	$0.00

AMOUNT DUE	AFTER DUE DATE	BY DUE DATE
	$ 15,168.00	$15,168.00

KEEP THIS PORTION FOR YOUR RECORDS
FREELAND MUNICIPAL AUTHORITY
P.O. BOX C, FREELAND, PA 18224

ACCOUNT NUMBER	DATE BILL MAILED
00007004	11/01/2021

PRESENT READING	PREVIOUS READING	UNITS USED
	0	

SERVICE FROM	SERVICE TO	DAYS USED
09/30/2021	10/31/2021	31

Happy Thanksgiving

22-0020

SERVICE ADDRESS	DUE DATE
1000 WYOMING AVENUE	11/20/2021

DESCRIPTION	AMOUNT DUE
Sewer	$20,047.62
Prev. Balance	$0.00

AMOUNT DUE	AFTER DUE DATE	BY DUE DATE
	$ 20,047.62	$20,047.62

Foster Billing as of November 2021

MMI	18
Highland	62
Upper Lehigh	66
Woodside	127
Odd Side Fern/Even Side Ridge	18
Grove	184
Youngstown	30
Butler Terrace	3
Total:	508

508 Units x $39.50=	$20,066.00
MMI Concession Stand Meter Out 11/11/21 -- 19 Days @1.32/day	($25.18)
TOTAL	$20,040.82

If your figures vary, please notify us immediately.

14,891.50

34,932.32

KEEP THIS PORTION FOR YOUR RECORDS
FREELAND MUNICIPAL AUTHORITY
P.O. BOX C, FREELAND, PA 18224

ACCOUNT NUMBER		DATE BILL MAILED
00007004		12/01/2021
PRESENT READING	PREVIOUS READING	UNITS USED
	0	
SERVICE FROM	SERVICE TO	DAYS USED
10/31/2021	11/30/2021	30

Merry Christmas & Happy New Year
22-0020

SERVICE ADDRESS	DUE DATE
1000 WYOMING AVENUE	12/20/2021
DESCRIPTION	AMOUNT DUE
Sewer	$20,040.82
Prev. Balance	$0.00

AMOUNT DUE	AFTER DUE DATE	BY DUE DATE
	$ 20,040.82	$20,040.82

KEEP THIS PORTION FOR YOUR RECORDS
FREELAND MUNICIPAL AUTHORITY
P.O. BOX C, FREELAND, PA 18224

ACCOUNT NUMBER		DATE BILL MAILED
00007003		12/01/2021
PRESENT READING	PREVIOUS READING	UNITS USED
	0	
SERVICE FROM	SERVICE TO	DAYS USED
10/31/2021	11/30/2021	30

Merry Christmas & Happy New Year
22-0030

SERVICE ADDRESS	DUE DATE
CITTERIO	12/20/2021
DESCRIPTION	AMOUNT DUE
Sewer	$14,891.50
Prev. Balance	$0.00

AMOUNT DUE	AFTER DUE DATE	BY DUE DATE
	$ 14,891.50	$14,891.50

Pennsylvania-American Water Company's Responses to
the Bureau of Technical Utility Services
Water/Wastewater Division
Data Request Set 1

Docket No. A-2021-3028676

Application of Pennsylvania-American Water Company-Wastewater Division for approval of the rights to: (1) acquire, by sale, certain wastewater system assets of Foster Township; and (2) begin to offer, render, furnish and supply wastewater service to the public in portions of Foster Township, Luzerne County, Pennsylvania

A-19. Please provide a five-year DEP compliance history of the Authority's Wastewater Treatment Plant.

Response: This information was requested from the Authority, but it has not yet been provided to Foster or PAWC. Based on a review of DEP's eFacts website, no DEP violations or penalties related to the Authority's Wastewater Treatment Plant are noted.

Name: Michael Salvo
Title: Senior Manager, Business Development

Pennsylvania-American Water Company's Responses to
the Bureau of Technical Utility Services
Water/Wastewater Division
Data Request Set 1

Docket No. A-2021-3028676

Application of Pennsylvania-American Water Company-Wastewater Division for approval of the rights to: (1) acquire, by sale, certain wastewater system assets of Foster Township; and (2) begin to offer, render, furnish and supply wastewater service to the public in portions of Foster Township, Luzerne County, Pennsylvania

A-20. Please provide copies of the most current wastewater rates, rules and regulations, along with the associated approval resolutions and ordinances, for both Foster and the Authority.

Response: Please see TUS-A-20_Attachment 1 and TUS-A-20_Attachment 2 for Foster's information. This information was also requested from the Authority, but it has not yet been provided to Foster or PAWC. PAWC will supplement this response upon receipt of the information.

Name: Brittany Majewski
Title: Municipal Secretary Foster Township

Township of Foster
Luzerne County, Pennsylvania
RESOLUTION NO. 2 of 2020

RESOLUTION OF THE BOARD OF SUPERVISORS OF THE TOWNSHIP OF FOSTER, LUZERNE COUNTY, PENNSYLVANIA, INCREASING USER CHARGES TO BE COLLECTED FROM THE OWNER OF EACH IMPROVED PROPERTY IN THE TOWNSHIP.

NOW THEREFORE, BE IT RESOLVED, by the Board of Supervisors of Foster Township, as follows:

The monthly flat rate *User Charge* payable per Equivalent Dwelling Unit (EDU) shall be increased from Sixty-Five ($65.00) Dollars to Eighty-Five ($85.00) Dollars.

This resolution shall become effective for the billing cycle beginning March 1, 2020.

DULY RESOLVED, by the Board of Supervisors of the Township of Foster, Luzerne County, Pennsylvania, in lawful session duly assembled, this 20th day of February, 2020.

ATTEST:

Georgiann Eckrote-Jones, Secretary

FOSTER TOWNSHIP BOARD OF SUPERVISORS:

Gerald Brogan, Chairperson

John Pavuk, Vice-Chairperson

Georgiann Eckrote-Jones, Secretary

FOSTER TOWNSHIP

LUZERNE COUNTY, PENNSYLVANIA

SEWER SYSTEM
RULES AND REGULATIONS

ORDINANCE NO. 1 - 2012

Prepared by:

ENTECH ENGINEERING, INC

685 South Mountain Boulevard, Suite A

Mountaintop, PA 18707

4147.18

Dated: December 2012

COPIES OF RULES: These Rules and Regulations are available for review at the Township's office at all times during regular business hours and are available for purchase for $25.00 per copy. These Rules and Regulations will be revised as conditions dictate. Please contact Foster Township for the latest revisions.

INDEX

SECTION	PAGE NO.
SECTION I: GENERAL PROVISIONS	1
SECTION II: SEWER USE REQUIREMENTS	3
SECTION III: ADMISSION OF INDUSTRIAL WASTES INTO SEWER SYSTEM	9
SECTION IV: APPLICATION FOR SEWER SERVICE	11
SECTION V: BUILDING SEWERS AND CONNECTIONS	12
SECTION VI: GRINDER PUMPS	14
SECTION VII: SEWER MAIN EXTENSIONS	15
SECTION VIII: SEWER USE CHARGES AND FEES	18
SECTION IX: BILLS, PAYMENTS AND TERMINATION OF SERVICE	22
SECTION X: PENALTIES	25

APPENDICES

APPENDIX A:	DEFINITIONS
APPENDIX B:	RATE SCHEDULE
APPENDIX C:	TAPPING FEE REPORT
APPENDIX D:	EDU ALLOCATION
APPENDIX E:	STANDARD CONSTRUCTION SPECIFICATIONS
APPENDIX F:	STANDARD CONSTRUCTION DETAILS
APPENDIX G:	SEWER CONNECTION PERMIT
APPENDIX H:	INDUSTRIAL WASTES QUESTIONNAIRE
APPENDIX I:	SEWER DISTRICTS MAP

SECTION I

GENERAL PROVISIONS

Title: This Ordinance shall be known and may be cited as "Sewer System Rules and Regulations Ordinance No. 1 of 2013".

Purpose: This Ordinance in enacted for the following purposes:

(1) These Rules and Regulations set forth uniform requirements for users of the Township Sewer System and help enable the Township to comply with applicable state and federal laws, regulations, and permits. The Township will furnish Sewer Service only in accordance with these Rules and Regulations.

(2) These Rules and Regulations are made part of every connection and service application, contract, agreement or license entered into between the Owner of any Improved Property and the Township. These Rules and Regulations are applicable to all Sewered Area within the Township. No connection, through which Sanitary Sewage or Industrial Wastes does or may enter the Sewer System, shall be constructed, altered, repaired, or allowed to exist, which does not comply with these Rules and Regulations.

(3) Except as otherwise provided herein, the Township shall administer, implement, and enforce the provisions of these Rules and Regulations, in accordance with the purposes, policies, and objectives as set forth herein.

(4) However, the Township does hereby reserves the right to alter, amend, and/or repeal these Rules and Regulations, which when altered and amended shall become and thereafter be a part of every such connection and service application, contract, agreement or license for Sewer Service in effect at the time of such alteration, amendment and/or adoption.

Repealer: All other ordinances, or parts thereof, which are inconsistent or in conflict with these Rules and Regulations are hereby repealed to the extent of any inconsistency or conflict.

Severability: The provisions of these Rules and Regulations shall be severable, and if any of its provisions shall be held to be unconstitutional, unlawful, ineffective, or invalid, the validity of any of the remaining provisions of this Ordinance shall not be affected. It is hereby declared to be the intention of the Foster Township Board of Supervisors that these Rules and Regulations would have been adopted had such unconstitutional, unlawful, ineffective or invalid provision not been included therein.

Effective Date: These Rules and Regulations shall become effective immediately upon its date of enactment as set forth below.

ATTEST:

Secrete Jones
SECRETARY

FOSTER TOWNSHIP SUPERVISORS:

BY: Scott J Brogan
CHAIRPERSON

SECTION II

SEWER USE REQUIREMENTS

CONNECTION: The Owners of any Improved Property located within 150 feet of the sanitary sewer anywhere in this Township, which is adjoining and adjacent to any sewer line acquired or constructed by this Township, is required at the Owner's expense to connect to the Township's Sewer System, in accordance with the provisions of these Rules and Regulations.

Upon connection, all Sanitary Sewage and permitted Industrial Wastes must be discharged into the Sewer System, including but not limited to water from toilets, showers, sinks and washing machines.

No Person shall connect any Improved Property with any part of the Sewer System without first making application for and securing a connection permit, in writing, from the Township. Such application shall be made on a form to be provided by the Township.

DISCONNECTION OF SERVICE: No Person shall terminate its Service to the Improved Property or disconnect its facilities from the Sewer System or permit the disconnection or removal of facilities serving the Property without the written consent of the Township. Breach of this provision shall subject the Person to liability for damage to Township property, and shall not terminate or suspend Owners' liability for User Charges or other applicable fees, nor shall it stop the accrual of such User Charges and fees.

DUTY TO NOTIFY TOWNSHIP OF CHANGES IN PREMISES: If the use or classification of any Improved Property changes, the Owner of the Improved Property shall be responsible for notifying the Township, in writing, of any such change.

SYSTEM ACCESS: By having applied for permission to, and/or having connected to, the Sewer System, the Owner of any Improved Property has given the Township the right of access at reasonable times to any Improved Property which is served by the Sewer System as shall be required for purposes of inspection, measurement, sampling and testing and for performance of other functions relating to services rendered by the Township through the Sewer System, and to ensure or enforce compliance with these Rules and Regulations.

PROHIBITED DISCHARGE: No Person shall discharge or shall cause to be discharged into the Sewer System any of the following without first securing written consent to do so from the Township:

(1) Storm water, surface drainage, ground drainage, roof runoff, subsurface drainage, cooling water, drainage from tile fields, spring water, floor drains or unpolluted process waters;

(2) Any Industrial Wastes, chemical or other matter exceeding any of the following parameters:

(a) Having a temperature higher than 140 degrees Fahrenheit or less than 32 degrees Fahrenheit;

(b) Containing more than 50 parts per million, by weight, of fat, oil or grease;

(c) Containing a Biochemical Oxygen Demand (BOD) of more than 250 milligrams per liter;

(d) Any liquids, solids or gases which by reason of their nature or quantity are, or may be, sufficient either alone or by interaction with other substances to cause fire or explosion or be injurious in any other way to the Treatment Plant or to the operation of the Treatment Plant, including but not limited to, waste streams with a closed-cup flashpoint of less than 140 degrees Fahrenheit using methods in 40 CFR 261.21. At no time shall two (2) successive readings on an explosion hazard meter, at any point of discharge into the system (or at any point in the system), be more than 5% nor any reading over 10% of the Lower Explosive Limits (LEL) of the meter. Prohibited materials include, but are not limited to, gasoline, kerosene, benzene, naphtha, toluene, xylene, ethers, ketones, aldehydes, peroxides, chlorates, perchlorates, bromates, carbides, hydrides and sulfides, fuel oil, or other flammable or explosive liquids, solids, or gas which the Township, EPA, PADEP has notified the User is a fire hazard or a hazard to the Sewer System;

(e) Containing any solid wastes with particles greater than ½-inch in any dimension, resulting from the preparation, cooking and dispensing of food and from handling, storage, and sale of produce, which wastes are commonly known as garbage, which have not been ground by household type garbage disposal units or suitable garbage grinders;

(f) Having a pH of not lower than 6.0 or higher than 9.0 or having another corrosive property capable of causing damage or hazard to structures, equipment or personnel of the Treatment Plant or the Sewer System;

(g) Containing total solids of such character or in such quantity that unusual attention or expense is required to handle such materials at the Treatment Plant or a suspended solids content of more than 300 milligrams per liter;

(h) Containing septic tank effluent, unless otherwise permitted, authorized or approved by the Township and the Department of Environmental Protection;

(i) Being harmful or deleterious to any part of the Sewer System;

(j) Being inhibitory or toxic to the treatment process at the Treatment Plant;

(k) Containing any noxious or malodorous gas or substance, which, either singly or by interaction with other wastes, is capable of creating a public nuisance or hazard to life or preventing safe entry into the Sewer System for maintenance and repair;

(l) Containing any ashes, cinders, sand, spent lime, stone or marble dust, mud, straw, shavings, metal, glass, animal guts or tissues, bones, hides or fleshing, feathers, entrails, rags, feathers, tar, plastic, wood, paunch manure, grass clippings, spent grains, spent hops, waste paper, strings, gas, asphalt residues, residues from refining or processing of fuel or lubricating oil, glass grinding or polishing, dental floss, wood or other fibers, whole blood, bentonite, lye, building materials, rubber, hair, leather, porcelain, china, ceramic wastes or any other solids or viscous substances capable of causing obstruction to the flow in the Sewer System or other interference with the proper operation of the Sewer System or the Treatment Plant;

(m) Containing a toxic or poisonous substance in sufficient quantity to injure or to constitute a hazard to humans or animals or to create any hazard in the receiving stream of the Treatment Plant.

(n) Having any waste containing toxic or poisonous substances in excess of the following limits, measured at the point of discharge to the Sewer System:

SUBSTANCE	MAXIMUM CONCENTRATION (ppm)
Arsenic	0.05
Cadmium (as Cd)	0.1
Chromium (trivalent)	1.0
Chromium (hexavelent)	0.05
Copper (as Cu)	0.5
Cyanides (free CN)	0.05
Lead	0.3
Mercury	0.002
Nickel (as Ni)	2.0
Phenolic Compounds	0.005
Silver	0.05
Zinc (as Zn)	1.0

(o) Containing any radioactive substances and/or isotopes of such half-life or concentration that will result in Treatment Plant effluents exceeding limits in compliance with applicable state or federal regulations;

(p) Containing color from any source that, when diluted 1:10, will have a luminescence of 90% or better and purity of 10% or less, at its dominant wave length by the Tristimulus method;

(q) Having a chlorine demand in excess of 12 mg/l at a detention time of 20 minutes;

(r) Being prohibited by any permit issued by the Commonwealth of Pennsylvania or by the EPA or any of their respective agencies;

(s) Containing wastes which are not amenable to biological treatment or reduction in the Treatment Plant, including but not limited to non-biodegradable complex carbon compounds;

(t) Being at a flow rate and/or pollutant discharge rate, which are taking on the proportions of a Slug so that there is a treatment process upset and subsequent loss of treatment efficiency at the Treatment Plant.

(u) Any substance which may cause the Treatment Plant's effluent or any other produce of the Treatment Plant, such as residue, sludges or scums, to be unsuitable for reclamation and reuse or to interfere with the reclamation process. In no case shall a substance discharged to the Treatment Plant cause the Township to be in non-compliance with sludge use or disposal criteria, guidelines or regulations affecting sludge use or disposal developed pursuant to the Solid Waste Disposal Act, the Clean Air Act, the Toxic Substances Control Act or other criteria applicable to the sludge management method being used by the Township;

(v) Containing any substance that will cause interference or pass through at the Treatment Plant and exceed the maximum permitted levels for such substances under the requirements of the EPA, PADEP or other governmental agencies having jurisdiction;

(w) Containing any substance prohibited by resolution, rule, regulation, or agreement of the Township hereafter enacted or adopted from time to time;

(x) Sludges, screenings or other residues from the pretreatment of industrial wastes;

(y) Medical wastes, except as specifically authorized by the Township in a wastewater discharge permit;

(z) Wastewater causing, alone or in conjunction with other sources, the Treatment Plant's effluent to fail toxicity test;

(aa) Detergents, surface-active agents or other substances which may cause excessive foaming in the Treatment Plant; or

(bb) Fats, oil or greases of animal or vegetable origin in concentrations which will cause interference or pass through.

SAMPLING AND TESTING: Sanitary Sewage or Industrial Waste being discharged into the Sewer System shall be subject to periodic sampling, inspection, and testing.

The frequency of such sampling, inspection, and testing shall be as deemed appropriate by the Township. The Owner of an Improved Property causing such discharge shall be liable for all sampling, inspection, and testing costs.

Laboratory methods used in the analysis of samples of Sanitary Sewage or Industrial Wastes shall be determined in accordance with the latest approved edition of "Standard Methods for Examination of Water and Wastewater", published by the American Public Health Association, Inc.; provided, however, that alternate methods for the analysis of samples may be used, subject to mutual agreement between the Township and the Owner discharging such Sanitary Sewage or Industrial Wastes into the Sewer System.

REGULATORY DEVICES: The Township has the right to require the Owner of any Improved Property having large variations in rates of discharge to install suitable regulating devices for equalizing waste flows to the Sewer System.

The average rate of discharge during any twenty four (24) hour period shall not be exceeded by more than 50% at any time during such twenty four (24) hour period.

PRETREATMENT STANDARDS: Upon the promulgation of the Federal Categorical Pretreatment Standards for a particular industrial subcategory, the Federal Standard, if more stringent than limitations imposed by the Township for sources in that subcategory, shall immediately supersede the limitations imposed by the Township The Township shall notify all affected Owners of the applicable reporting requirements under 40 CFR, Section 403.12.

DILUTION: No Person shall ever increase the use of process water or, in anyway, attempt to dilute a discharge as a partial or complete substitution for adequate treatment to achieve compliance with the limitations contained in the Federal Categorical Pretreatment Standards, or in any other pollutant-specific limitation developed by the Township, EPA or Commonwealth.

INSPECTION OF DISCHARGES AUTHORIZED BY PERMIT: Whenever a Owner is authorized by the Township and the appropriate governmental agencies to discharge any polluted water, Sanitary Sewage or Industrial Waste containing any of the substances or possessing any of the characteristics referred to within the "Prohibited Discharge", such discharge shall be subject to the continuing approval, inspection and review of the Township.

If in the opinion of the Township, such discharges are causing or are likely to cause damage to the Sewer System, the Township shall order the Owner causing such discharge to cease doing so forthwith, or to take other appropriate action, as may be required by the Township, to eliminate the harmful discharge. The Owner causing such discharge shall be liable for any inspection and engineering costs accrued by the Township.

SEWER INTERCEPTORS AND SEPARATORS: Harmful discharges to the Sewer System are prohibited. Interceptors and separators shall be provided, installed, and maintained by the Owner of an Improved Property, at their expense, wherever in the sole judgment of the Township they are deemed necessary for the proper handling of liquid wastes containing excessive grease, inflammable wastes, sand, or other harmful substances. All interceptors and separators shall be of a type and capacity shall be determined by the Owner using sound engineering practices and shall be approved by the Township and constructed and installed at a satisfactory location in accordance with plans approved by the Township prior to installation or commencement of construction.

<u>GREASE INTERCEPTORS</u>: A grease interceptor shall be required to receive the grease laden drainage from plumbing fixtures and equipment located in the food preparation areas of commercial and industrial establishments. This includes, but is not limited to, restaurants, bars, schools and food processing facilities. No Sanitary Sewage shall be discharged into the grease interceptor.

<u>OIL INTERCEPTORS</u>: An oil interceptor shall be required to receive drainage from work areas of commercial and industrial establishments where the possibility exist that petroleum product could become mixed with wastewater. This includes, but is not limited to, garages and gasoline stations.

<u>SPECIAL PURPOSE INTERCEPTORS</u>: Interceptors shall be required at commercial and industrial establishments where the nature of their operation is such that a substance detrimental to the Sewer System could enter the wastewater stream.

ACCESSIBILITY AND MAINTENANCE: Each interceptor or separator shall be installed so as to be readily accessible for service and maintenance. Interceptors and separators shall be maintained by periodic removal of accumulated grease, scum, oil, solids, etc. and by disposal of the material in a lawful manner. All interceptors shall be pumped at least every ninety (90) days, or more frequently if the accumulated grease, scum, oil and solids exceed 25 percent of the total volume of the device. Disposal shall be in accordance with appropriate laws.

INSPECTION AND RECORDS: Township shall make periodic inspections of these facilities and review associated records to assure proper installation, maintenance, and disposal procedures are being practiced. Written records, maintained by the Owner or facility management, shall be required for a period of three (3) years to document required maintenance and lawful disposal of all accumulated material. The Township shall also require the annual submission of this documentation.

If the Township determines that pumping and/or maintenance is necessary, the required work must be completed by the Owner within 72 hours of written notification.

SPECIAL AGREEMENT: Nothing contained herein shall be construed as prohibiting any special agreement or arrangement between the Township and the Owner of an Improved Property or other Person whereby Sanitary Sewage or Industrial Wastes of unusual strength or character to be admitted into the Sewer System, either before or after preliminary treatment. However, any such agreement or arrangement must be documented in written permission from the Township.

SECTION III

ADMISSION OF INDUSTRIAL WASTES INTO SEWER SYSTEM

GENERAL: Any Owner desiring to make or to use a connection through which Industrial Wastes shall be discharged into the Sewer System shall file with the Township a completed "Industrial Wastes Questionnaire," furnished by the Township, which shall supply to the Township pertinent data, including estimated quantities of proposed flow, characteristics and constituents of the proposed discharge.

CHANGE IN TYPE OF WASTES: Any Industrial Establishment or Owner of an Improved Property who is discharging or permitting to be discharged Industrial Wastes into the Sewer System and who contemplates a change in the method of operation which will alter the composition of Industrial Wastes at the time being discharged into the Sewer System shall notify the Township, in writing at least thirty (30) days prior to consummation of such change so that the Township may sample the Industrial Wastes immediately after such change takes place in order to make the determinations provided for or required herein.

SAMPLING FLOW, MEASUREMENT, TESTING AND INSPECTION:

When required by the Township, the Owner of any Improved Property serviced by a Building Sewer carrying Industrial Wastes shall provide and install, at their expense, a suitable control manhole, together with such necessary meter, or meters, and other appurtenances in the Building Sewer, to facilitate observation, sampling and measurement of the waste flow.

All measurements, tests and analysis of the characteristics of waters and wastes to which reference is made herein shall be determined in accordance with the latest approved edition of "Standard Methods for Examination of Water and Wastewater", published by the American Public Health Association, Inc., and shall be determined by or under the direct supervision of a "qualified analysis" at the control manhole provided, or upon suitable samples taken at such control manhole. In the event that no control manhole has been required, the control manhole shall be considered to be the nearest downstream manhole in the public sewer to the point at which the Building Sewer is connected. Sampling shall be carried out by customarily accepted methods to reflect the effect of constituents upon the Sewer System and to determine the existence of hazards. The particular analysis involved will determine whether a twenty four (24)-hour composite of all outfalls of Premises is appropriate or whether a grab sample or samples must be taken.

The Township reserves the right, based upon the pertinent data supplied to reasonably refuse to permit the introduction of specified Industrial Wastes into the Sewer System, to order as a condition precedent to connection that pretreatment facilities be constructed as hereinafter provided, or if it reasonably believes that the Industrial Wastes cannot be adequately pretreated, to deny the right to connect to the Sewer System.

The Township specifically reserves the right, from time to time, to impose surcharges for Industrial Wastes discharged into the Sewer System, either by agreement with the Owner of the Improved Property or by amendment and/or supplement to these Rules and Regulations which shall establish appropriate surcharge rates and charges.

SIGNIFICANT INDUSTRIAL USER REPORTS:

Ten (10) days prior to the first day of January, April, July and October of each year, each Significant Industrial User shall file with the Township a report on the quantity and quality of their discharge.

PRETREATMENT FACILITIES: Whenever a Owner requests permission from the Township to discharge any Sanitary Sewage or Industrial Waste containing any of the substances or possessing any of the characteristics referred to in the "Prohibited Discharge", the Township may, in its sole discretion, require as a condition to its granting approval for such discharge, that said Owner provide, at their own expense, pretreatment of such waters or wastes to reduce or eliminate objectionable substances or characteristics prior to discharge into the Sewer System, or to control the quantities or rates of discharge of such waters or wastes.

Whenever an Owner is required by the Township to provide pretreatment facilities, no construction of such facilities shall be commenced until: (1) construction drawings, specifications and other pertinent information relating to the proposed facilities are submitted by said Owner to the Township's Engineer; and (2) the Township's Engineer gives written approval for the construction of the proposed facilities.

Whenever pretreatment facilities are approved by the Township, and are placed in operation, said facilities shall be continuously maintained in satisfactory and effective operation by the Owner who installed them, at their own expense. The Township or its designated agent shall have the right to inspect said facilities at any reasonable time to insure such are being properly maintained and operated in accordance with the Rules and Regulations of the Township.

SECTION IV

APPLICATION FOR SEWER SERVICE

GENERAL: No Person shall uncover, connect with, make any opening into or use, alter or disturb in any manner any part of the Sewer System without first making application for and obtaining a permit, in writing, from the Township. Application to the Township for a Sewer Permit required hereunder shall be made by the Owner of the Improved Property to be served, in such form as may be prescribed from time to time by the Township. The application shall be accompanied by such tapping and/or connection fee as may be required by the Township from time to time.

APPLICATION: Copies of the Sewer Connection Application shall be made available at the Foster Township Municipal Building. The application is subject to change at the discretion of the Township. Therefore, applicant shall ensure that they have the latest revision of the application. The application is to be submitted to the Township by the Owner requiring or desiring connection to the Sewer System.

APPROVAL OF APPLICATION: The application and its acceptance by the Township shall constitute, from the date of acceptance by the Township, a contract obligating the Owner to pay rates and charges as established by the Township from time to time and to comply with the Rules and Regulations which shall be established from time to time.

TRANSFERS AND TERMINATION: Each sewer connection permit validly issued shall, upon conveyance of title to the real estate for which the connection was permitted, pass automatically to the record title owner of such property. Bills for sewer rental shall continue to the title owner of record with the Township, until such time as the Township shall receive written notice of the transfer and the name and address of the new record title owner. No sewer connection permit may be transferred to another person other than a new record title owner of the property for which such permit was issued. The holder of any valid sewer permit for a vacant lot, a structure that is unoccupiable, or a separate use no longer separate, may terminate such permit by written notice to the Township. Upon receipt of such notice, the sewer connection represented by such permit shall revert to, and become the sole property of the Township, free and clear of any claim or interest of the former holder. No termination of a permit servicing an occupied or occupiable structure shall be permitted until proof satisfactory to the Township is supplied that the premises has been vacated and that steps have been taken, satisfactory to the Township, to render it unoccupiable, or in the case of multiple uses in the same structure, that the separateness of the use has been permanently eliminated.

Any holder of a validly issued sewer connection permit for a vacant lot from which a structure was demolished, a structure that is unoccupiable, or a separate use is no longer separate, may request that such permit be placed in escrow for a period of up to one year. If accepted by the Township for escrow, the sewer rent during such period shall be reduced to 50% of the original rent provided that the building sewer is physically capped with concrete or other Township approved methods. The holder may at any time during that year return the permit to active status, whereupon the sewer rent shall immediately revert to the full amount. If the holder does not withdraw the permit from escrow by the first anniversary of placement in it, the permit shall automatically revert to the Township, which shall have the right to deal with such permit free and clear of any claim or interest of the holder. No permit may be placed in escrow more than one time. This procedure shall only be available for previously issued permits; no newly issued permit may be placed directly into escrow. Billing for sewer rental shall continue, once commenced, until the permit for which the billing is issued shall be terminated as aforesaid.

SECTION V

BUILDING SEWERS AND CONNECTIONS

GENERAL: No connection shall be made to the Sewer System unless the manner in which the connection is made and the materials and workmanship employed in effecting such connection shall comply with the requirements of the Township's Standard Construction Specifications. It shall also be necessary for all connections to comply with any special requirements imposed by these Rules and Regulations.

SEPARATE CONNECTIONS: Each Improved Property shall be connected separately and independently to the Sewer System through a Building Sewer. Grouping of more than one Improved Property on one (1) Building Sewer shall not be permitted except under special circumstances and for good sanitary reasons or other good cause shown and then only after special permission by the Township, in writing, shall have been secured, and subject to such rules, regulations, and conditions as may be prescribed by the Township. The installation of such separate Building Sewers and Laterals shall be made at the expense of the property Owners.

CONNECTION NOTICE: No Person shall make or cause to be made a connection of any Improved Property or Premises to the Sewer System until such Person shall have given the Township at least five (5) business days notice of the time when such connection will be made so that the Township may inspect the work, connection and perform necessary testing.

No connection shall be made to the Sewer System or the pipe trench covered or trench backfilled unless and until the Building Sewer installation has been inspected and approved, in writing, by the Township's representative and all permits, approvals, and inspection forms, if any are required, have been received and provided to the Township.

It is the intention of the Rules and Regulations that the entire connection be inspected at one time; however, if the Owner feels that specials conditions warrant more than one inspection, the Owner may request the same, subject to such additional inspection fees as the Township shall determine.

CONNECTION COSTS: All costs and expenses of construction and connection of a Building Sewer to a Sewer System shall be borne solely by the Owner. Every Owner connecting to the Sewer System shall agree to indemnify and save harmless the Township from and against any and all loss or damage that may be occasioned to the Sewer System or any other property of the Township or any other third party property, directly or indirectly, as well as from an action, cause of action, claim or judgment, including any costs and reasonable attorney fees incurred in defending such action, cause of action, claim or judgment, as a result of construction of a Building Sewer or of connection of a Building Sewer to the Sewer System.

MAINTENANCE BY PROPERTY OWNER: Every Building Sewer shall be maintained at all times in a sanitary and safe operating condition by the Owner of an Improved Property. Owner shall comply with all maintenance and discharge rules imposed by the Township, including those which may be set forth, in writing, separately from these rules from time to time. It shall be Owner's responsibility to ensure that occupants of the Premises or tenants, if any, comply with all maintenance and discharge rules imposed by the Township. Further, in the even the Township determines that the Owner or Customer was responsible for causing blockage or damage in an area which would ordinarily be the responsibility of the Township, by placing inappropriate material into the Building Sewer, as determined by the Township, the Owner shall be responsible to reimburse the Township for all costs incurred, including labor and material, to correct the blockage or repair the damage.

REPLACEMENT OF BUILDING SEWER: In the event it becomes necessary to replace a Building Sewer, the Owner shall notify the Township and such a replacement shall be subject to the specifications and inspection provisions of these Rules and Regulations. The Owner shall be responsible for all costs of replacement of the Building Sewer.

LIABILITY FOR IMPROPER DISCHARGE: Any Person who discharges or permits to be discharged any material to the Sewer System except through approved connections will be subject to such charges as the Township may establish and shall hold harmless and indemnify the Township from any costs and charges imposed by an governmental agency with jurisdiction, in addition to being subject to any penal provisions imposed by the Township, PADEP or the Environmental Protection Agency.

In addition, such Person shall also indemnify the Township and hold it harmless from any action or cause of action, in writing, shall have been secured, and subject to such rules, regulations, and conditions as may be prescribed by the Township.

OWNER RESPONSIBLE FOR COSTS: All costs and expenses for the construction of a Building Sewer, including testing, shall be borne by the Owner of an Improved Property to be connected; and such Owner shall indemnify and save harmless the Township from all loss or damage which may be occasioned, directly or indirectly, as a result of construction of a Building Sewer. If required for Service to a Property, the Township, at the expense of the Owner, may construct the Building Sewer. The Township shall have the right to repair a damaged Building Sewer at the Owner's expense; and such Owner shall indemnify and save harmless the Township from all loss or damage which may be occasioned, directly or indirectly, as a result of the repair of a Building Sewer.

SPECIAL REQUIREMENTS: Whenever, in the opinion of the Township, special conditions require additional safeguards or more stringent specifications to be observed, then the Township specifically reserves the right to refuse to permit a connection to be made to its Sewer System until such special requirements or specifications as may be stipulated by the Township have been satisfied.

SECTION VI

GRINDER PUMPS

GENERAL: It is the policy of the Township that the use of conventional gravity sewage collection facilities, wherever technically practical, is in the best interest of the Township and its customers. Grinder pump units shall only be used for Premises that cannot be served by gravity Building Sewers meeting the requirements of the Township.

All costs and expenses of acquisition, construction, operation and maintenance of a Building Sewer and of the Lateral serving any improved Property shall be borne by the Owner of the Improved Property served thereby, unless otherwise provided by this Township. All costs and expenses of connection of a Building Sewer to a Lateral, and connection of a Lateral to a Sewer, including such costs and expenses of acquiring, installing, operating and maintaining a grinder pump or similar apparatus approved by the Township, shall be borne by the Owner of the Improved Property so connected, unless otherwise provided by this Township. Each such Owner shall indemnify and shall save harmless this Township from all loss or damage that may be occasioned, directly or indirectly, as a result of construction, connection, operation or use of a Building Sewer or Lateral.

SECTION VII

SEWER MAIN EXTENSIONS

GENERAL: Where an Owner desires to extend Sewer Service to an Improved Property or properties, they may do so after having met all of the conditions of these Rules and Regulations. All extensions so constructed shall include, without limitation, all Sewer Mains, Building Sewers, pumping stations, Sewer force mains, connections, and other necessary appurtenances.

PAYMENT OF COST: The entire cost of the requested sewer Main extensions shall be borne by the Owner requesting or requiring the extension. The Township shall be subject to no cost.

The Owner shall deposit with the Township, prior to the execution of any work, a sum of money sufficient to pay all of the Township's estimated costs associated with the proposed extension, including but not limited to engineering, legal, inspection, testing, observation, and administrative costs, as determined by the Township in its reasonable discretion, the deposit to be made upon the execution of an agreement between the Township and the Owner. The amount of deposit shall be determined by the Township from time to time, and a minimum balance must be maintained in the escrow account. If the balance of the account falls below the minimum established by the Township, the Township may demand additional deposits from time to time at its sole discretion.

AGREEMENT: The Owner shall enter into a written agreement with the Township, prior to the execution of any work, in a form satisfactory to the Township. The agreement to contain such pertinent conditions which include, but are not limited to, the following:

1. The Streets in which the extension is to be located must be dedicated to public use, the lines and grades thereof established and the rough grading completed. Where a line is located in a private right-of-way, an Easement shall be dedicated to the Township for its use and benefit, in a form acceptable to the Township.

2. The Ownership title to all installations shall be conveyed to and vested in the Township, when approved by the Township.

3. The Owner and its Contractor, where applicable, shall be required to provide the Township with performance and payment bonds in the full amount of the work construction cost in accordance with applicable laws and the agreement required to be entered into between Owner and Township.

4. The Owner's Contractor shall provide the Township with certificates of insurance in the amounts specified by the Township, with the Township and the Township's Engineer names as additionally insured on liability policies.

5. The Owner shall be responsible for maintenance of any sewer Main facilities for a period of Eighteen (18) months following acceptance and dedication of such improvements by the Township. The Owner shall be responsible for maintaining cash security, on deposit with the Township or under a letter of credit acceptable in form and substance to the Township of an amount equal to fifteen (15%) percent of the construction costs as security for Owner's maintenance responsibilities for such Eighteen (18) month period.

6. The Township shall have the right to make further extensions beyond or laterally from the extensions, such extensions not to be considered as connections subject to any refund.

7. The payment of refunds to the Owner for additional new Customers connecting by way of a Lateral to the extension to be subject to such conditions as set forth in the agreement, and to limiting number of years, not to exceed 10 years, for the payment of refunds. No refunds are to be made unless the collection part of the tapping fee is received from the new Customers for the privilege of obtaining direct Service from the extension, through a service line connection or sewer lateral. There is no refund for new Customers connecting to subsequent extensions of the initial extension.

8. Such other related requirements.

DESIGN: It is the policy of the Township that the use of conventional gravity sewage collection facilities, wherever technically practical. Grinder pump units and other alternative sewer systems shall only be allowed for Premises that cannot be served by conventional gravity sewage collection facilities. Final determination on whether the Premises cannot be served by conventional gravity sewage collection facilities will be made by the Township and whether an alternative sewer system will be acceptable.

Sewer Main extensions shall be designed by the Owner subject to Township approval, and shall comply with the following conditions:

1. The Owner must secure the services of a Registered Professional Engineer and a Registered Professional Surveyor to prepare the necessary plans and specifications, which shall be subject to approval by the Township. Any revisions in the design considered necessary in the opinion of the Township's Engineer shall be made at the expense of the Owner. Such plans so prepared shall be signed and sealed by the Registered Professional Engineer and Registered Professional Surveyor.

2. The plans shall include the proposed location of the extensions, the layout of the streets and roads, the layout of existing and proposed plans of lots, existing utilities, and other pertinent data, such plans to be in sufficient detail to permit the Township to review and approve the plans.

3. All extensions shall be located in dedicated streets or within right-of-way dedicated for public use. Where required sewer line easements (easement) have not been recorded, the Township shall be provided with a written easement suitable for recording. The easement shall be a minimum width of 20 feet and to the extent possible the easement shall be uniform in shape, and parallel to property lines with the sewer line placed in the middle area of the right-of-way. The entire post-construction easement shall be accessible for maintenance. The easement document shall be accompanied by individual legal descriptions and plots for each lot on which the easement is located, as well as an overall easement location plan for the entire project. Such descriptions and plots shall be in a form acceptable to the Township.

4. All extensions shall be designed in such a manner as will permit future extensions thereof with the dedication of the easement, whenever applicable, providing for future extensions.

CONSTRUCTION: No construction of any sewer Main intended to be connected to the Township shall be undertaken until such plans and specifications are approved by the Township and all necessary permits are secured.

All construction shall be done in accordance with the Standard Construction Specifications and approved plans and specifications and in accordance with applicable federal, state, and local statues, ordinances, and regulations. All construction is subject to inspection, testing, observation, and approval by the Township and its designated representatives.

The construction shall be observed on a full-time basis by the Township's representative and the Owner is to be responsible for the payment of all observation costs.

DEDICATION: All extensions shall be connected to sewer Mains owned by the Township, and shall be dedicated to and become property of the Township after inspection and acceptance by the Township within the Sewered Area. The Township will accept dedication of the sewage system provided that:

1. The Owner has entered into an agreement with the Township that is suitable to the Township's solicitor.

2. The Owner has provided a bill of sale for all appurtenances being dedicated to the Township;

3. The sewage system has been properly installed and is in good repair.

If after completion of any Main installed by a Person or a contracting firm other than the Township, and if an acceptable offer of dedication is not received immediately upon completion of the work, at the Township's option, the Township may withhold Service, or the Township may discontinue any Service improperly instituted by the Owner, or the Township may disconnect Owner's line from the Township Sewer System with all costs associated therewith to be paid by Owner.

SECTION VIII
SEWER USE CHARGES AND FEES

GENERAL: This Township hereby does impose fees against Owners who desire to or are required to connect to the Sewer System. The fees shall be based on the duly adopted rate schedule which is in effect at the time of payment and shall be made payable at the time set by the Township or at a time to which the Property Owner and Township agree.

The Property Owner, in all instances, rather than tenant(s), shall be liable for the payment of all Sewer charges and fees for services provided by the Township, and all costs and fees incurred in the collection thereof. All accounts shall be in the name of the Owner only; provided, however, that a written agreement by and between the Township and Owner to bill the tenant for Service may be negotiated.

No officer or employee of the Township is authorized to reduce, vary or exempt charges imposed herein or other provisions without official action by the Board of Supervisors.

OWNER SUPPLIED INFORMATION: The Owner of any Improved Property discharging Sanitary Sewage and/or Industrial Wastes into the Sewer System shall furnish to the Township, including by way of the application for permit, all information deemed essential or appropriate by the Township for the determination of all applicable User Charges and surcharges. The costs of obtaining such information shall be borne by such Owner of the Improved Property.

In the event of the failure of the Owner to provide adequate information, the Township shall estimate the applicable User Charges and surcharges based upon available information, until such time as adequate information is received. There shall be no rebate of past payments if the Owner's refusal to provide such information results in overpayment.

CALCULATION OF FEES: All such fees payable by the Owner shall be calculated by multiplying the amounts of the various fees times the number of Equivalent Dwelling Units (EDUs) assigned for the property's use. The Township, in its sole discretion, shall determine the appropriate number of Equivalent Dwelling Units to be assigned to a particular property, taking into consideration data supplied by the Owner, all Department of Environmental Protection Regulations, Industry reference publications and their own experience.

MULTIPLE USE PROPERTY: Each EDU located in a Multiple Use Property shall be billed as a separate entity as though such EDU was in a separate structure and had a direct and separate Building Sewer to the Sewer System.

TAPPING FEES: A Tapping Fee is hereby imposed upon the Owner of any Improved Property to be served by the Sewer System, which actually connects or is required to be connected pursuant to the Connection Ordinance then in effect requiring such connection.

The fees charged by the Township include charges for connection to the Sewer System including Connection Fees, Consumer Facilities Fees and Tapping Fees and such other fees as may be authorized by Act 57 of 2003, as amended, or such other Act of the Commonwealth of Pennsylvania or its agencies and adopted by the Township.

CALCULATION OF TAPPING FEES: Calculation and itemization of the maximum allowable Tapping Fee is attached hereto in Appendix C and made a part hereof.

The actual Tapping Fee payable by the Owner of an Improved Property shall be the product of the number of EDUs, constituting such Improved Property, times the adopted Tapping Fee, as noted within the Rate Schedule of the Township then in effect.

In the event an Improved Property, or use thereof (including number of occupants), changes in a manner that causes the number of EDUs applicable to such Improved Property calculated hereunder to increase, an additional Tapping Fee based on such additional EDUs shall be immediately due and payable.

The Township reserves the right to update the Tapping Fee Report and adopt a revised Tapping Fee as may be authorized by Act 57 of 2003, as amended, or such other Act of the Commonwealth of Pennsylvania or its agencies and adopted by the Township.

USER CHARGES: A User Charge is hereby imposed upon the Owner of any Improved Property which is or shall be connected to the Sewer System, for use of the Sewer System, whether such use is direct or indirect, and for services rendered by the Township in connection therewith, and shall be payable as provided herein.

At the discretion of the Township, such User Charges may be imposed upon the Owner of an Improved Property who fails or refuses improperly to connect such Improved Property to the Sewer System, as compensation for the availability of service by the Township in connection with the Sewer System.

CALCULATION OF USER CHARGES: User Charges for service applicable to any Improved Property, Premises, or Connection Unit constituting a Residential Establishment, a Commercial Establishment, an Educational Establishment, an Industrial Establishment, an Institutional Establishment or any combination thereof, shall be calculated, imposed and collected on the basis of one of the following methods, in the sole discretion of the Township:

a. **Flat Rate Basis**: Each Property billed on a flat rate basis shall be charged based on the number of Billing Units represented by the Property using a specific charge per EDU applicable to such Property, which specific amount shall be determined, from time to time, by the Township.

   If the use or classification of any Improved Property changes during a billing period, the User Charge shall be prorated by the Township. The appropriate credit or charge shall appear on the statement for the next succeeding billing period. The annual Flat Rate User Charge payable per Billing Unit shall be determined by Resolution of the Township from time to time and reflected in the Rate Schedule.

   The Township reserves the right, from time to time, to establish additional flat rate classifications and to establish quarter annum rates therefore; and the Township further reserves the right, from time to time, to alter, modify, revise and/or amend flat rate classifications and the quarter annum.

   The number of EDUs applicable to Commercial and Industrial Establishments shall be computed on the basis of the average daily number of full and part-time employees (including the owner(s) or employee(s) for the calendar month following the date of the quarterly billing). The Owners of such facilities shall be responsible for advising the Township in writing of the number of employees upon connection to the Sewer System, a change in the number of employees, and upon request of the Township.

   The number of EDUs applicable to Educational and Institutional Establishments shall be computed on the highest monthly average daily attendance of occupants, pupils, faculty, administrators and staff for the twelve (12) months preceding the date of the billing. The Owners of such facilities shall be responsible for advising the Township in writing of the number of pupils, faculty, administrators and staff in attendance as an average daily figure upon connection to the Sewer System, a change in the number of occupants, pupils, faculty, administrators and staff, and upon request of the Township.

If the use or classification of any Improved Property changes, the Owner of the Improved Property shall be responsible for advising the Township in writing of any such change affecting the User Charge payable. The appropriate credit or additional charge shall appear on the statement for the next succeeding billing period.

Metered Rate Basis: User Charges for any Property, in the discretion of the Township, may be determined on a Metered Rate Basis calculated according to:

- Metered volume of potable water usage by the non-residential Improved Property, adjusted, if appropriate, by the Township, or
- Actual metered volume of wastewater discharged by the non-residential Improved Property into the Sewer System.

In either of the foregoing cases, such User Charges on a metered basis shall be computed on the basis of one (1) EDU per each 60,000 gallons or portion thereof of water consumed or sewage discharged annually. In no case shall the Township utilize a meter based User Charge for any User which shall result in a rate below the minimum rates established for billing units in this section.

The meters or other measuring devices which shall be required or permitted for use in determining volume of discharge or water consumed shall be furnished and installed by the Owner of the Improved Property at their expense, shall be under the control of the Township and may be tested, inspected, or repaired by the Township whenever they deem necessary. The Owner of the Improved Property upon which such meter or other measuring device shall be installed shall be responsible for its maintenance and safekeeping and all repairs thereto shall be made at the expense of the Owner, whether such repairs shall be necessary by ordinary wear and tear or other causes. Bills for such repair, if made by the Township, shall be due and payable immediately upon completion of such repairs and shall be collected in the same manner as quarterly bills for sewer rentals or charges.

b. **Estimated Rate Basis**: User Charges may also be based upon the Township's estimate of potable water consumed by any Improved Property per billing period and billed in accordance with the Metered Rate Schedule adopted by Resolution of the Township from time to time.

SURCHARGES: Surcharges shall be paid in addition to all User Charges computed in accordance with the Rules and Regulations, as amended, and shall be computed on such basis, and payable at such times, as the Township may from time to time adopt, including provisions of any agreements to which this Township is a party governing the treatment of Domestic Sanitary Sewage or Industrial Wastes.

Surcharges will be calculated independently on a case-by-case basis on the duration and degree of severity of the discharge, the actual cost to remedy and/or treat the discharge and shall be assessed separately.

CALCULATION OF SURCHARGES: In the event that the Township shall consent, in writing, under separate agreement to accept Domestic Sanitary Sewage and/or Industrial Wastes for discharge into the Sewer System from any establishment having concentrations higher than that described in the prohibited waste, the Township shall at its discretion impose additional charges for such waste.

The strength of Domestic Sanitary Sewage and/or Industrial Wastes to be used for establishing the amount of surcharge shall be determined at intervals at the discretion of the Township or as may be required by a particular establishment. The collection and analysis of waste samples for

determination shall be made or under the direct supervision of a registered professional engineer approved by the Township.

For establishing waste strengths for surcharge purposes, sampling and analysis shall be made in accordance with the latest approved edition of "Standard Methods for Examination of Water and Wastewater", published by the American Public Health Association, Inc. All costs for waste sampling and collection shall be paid by the Owner of Improved Property, which entered into separate agreement with Township to accept such Domestic Sanitary Sewage and/or Industrial Wastes.

The Owner of any Improved Property which shall discharge Domestic Sanitary Sewage and/or Industrial Wastes to the Sewer System having a BOD content greater than 250 mg/l, a Suspended Solids content greater than 300 mg/l, a Total Phosphorus as P content greater than 7 mg/l, or a Total Nitrogen as N content greater that 35 mg/l shall, in the discretion of the Township, pay a strength of waste surcharge, in addition to applicable User Charges, according to the following formulas:

Surcharge Calculation = (mg/l over Normal Concentration) x (Million Gallons Water Usage for Month) x (8.34 Pounds per Gallon of Water) x (Fee per Pound)

SPECIAL AGREEMENT: Nothing contained herein shall be construed as prohibiting any special agreement or arrangement between the Township and the Owner of an Improved Property with respect to terms and conditions upon which Sanitary Sewage and/or Industrial Wastes may be discharged into the Sewer System and with respect to payments to be made to the Township in connection therewith. In such event, such service and payments with respect thereto shall be governed by terms and conditions of such special agreement.

SECTION IX
BILLS, PAYMENT AND TERMINATION OF SERVICE

GENERAL: All bills for services furnished by the Township will be based on the rate schedule of the Township then in effect.

Each Owner of an Improved Property, which is connected to the Sewer System, initially shall provide the Township with and thereafter shall keep the Township advised of their correct address. Failure of any Person to receive any bill for sewer rates shall not be considered an excuse for nonpayment or an abatement of penalties, nor shall such failure result in an extension of the period of time during which the net bill shall be payable.

Every Owner of Improved Property shall remain liable for the payment of all bills, including but not limited to User Charges and surcharges, until the later of:

1. The receipt by the Township of written notice by such Owner that the property has been sold, containing the correct name and mailing address of the new Owner, or

2. The date on which title to the Improved Property is transferred to a new Owner. Failure to provide notice renders an Owner continuously liable for any charges that may accrue until such time as the Township has been properly notified of any change in Ownership.

TIME AND METHOD PAYMENT

TAPPING FEE

The Tapping Fee shall be due and payable the earlier of:

1. The time application is made by an Owner of an Improved Property to make connection to the Sewer System or if applicable the date when the Township shall connect any such Improved Property to the Sewer System, at the costs and expense of the Owner, when such Owner shall have failed to make such connection as required by the Connection Ordinance in effect requiring such connection.

2. In the case of Improved Properties required to be connected following initial construction of the Sewer System, the date which is sixty (60) days after the date of issuance by the Township of a written notice to connect.

3. Owners of an Improved Property which is attributed an additional number of EDUs as defined by the Township rate structure herein shall pay a corresponding additional Tapping Fee at the time of being attributed with the new EDU computation.

All Tapping Fees shall be payable to the officer or employee of the Township as shall be authorized, from time to time, by the Township to accept payment thereof.

No Tapping Fees shall be reimbursed by the Township for subsequent reductions in the number of EDUs constituting a particular Improved Property.

USER CHARGES AND APPLICABLE SURCHARGES

User Charges shall be due and payable the earlier of:

1. Thirty (30) days from the date of actual, physical connection of an Improved Property to the Sewer System.

2. Sixty (60) days from the date of issuance of the notice to connect described in the Connection Ordinance or such other date established by the Township for commencement of the payment of the User Charge.

3. One (1) year from the date of issuance of a sewer connection permit.

All bills for sewer rates shall be rendered quarterly on the first day of each quarter, starting with January 1 in each year, or on such other dates as the Township shall specify and shall cover a quarterly billing period consisting of the immediately preceding calendar quarter. All bills for sewer rates, which shall be based on estimates of the Township, shall be rendered for each quarterly billing period promptly after the estimates are made. Owners of an Improved Property that shall first connected to the Sewer System during any monthly period shall pay a pro-rata User Charge for service for the balance of the quarter and shall be billed in conjunction with the next regular quarterly billing or by a special billing, as the Township may determine.

Sewer rates shall be due and payable upon the applicable billing date, at the office of the Township, in the appropriate amount, computed in accordance with the attached Schedule of Rates, and shall constitute the net bill.

DELINQUENT ACCOUNT PROCEDURES: If any User Charge or applicable surcharge is not paid within thirty (30) calendar days after the applicable billing date, an additional sum of ten percent (10%) penalty shall be added to such net bill, which net bill, plus such additional sum, shall constitute the gross bill.

In addition to the net bill and the penalty, an interest rate of 1% per month shall be charged on any gross bill not paid within thirty (30) calendar days from the date due.

Payment made or mailed and postmarked on or before the last day of such thirty (30) calendar days period shall constitute payment within such period. If the end of such thirty (30) calendar days period shall fall on a legal holiday or a Sunday, then payment made on or mailed and postmarked on the next succeeding business, which is not a legal holiday, shall constitute payment within such period.

Any and all payments received on delinquent accounts shall be applied first to any penalty and interest and then to the oldest outstanding gross bill.

NON-PAYMENT: Payment of any User Charge or applicable surcharge not paid within a timely manner, as determined by the Township, may be referred to an attorney for collection of delinquent accounts. Attorney fees shall be paid in accordance with Title 53 P.S. Section 7106.

The Township reserves to itself the following remedies in the event of non-payment, which it may exercise separately or in any combination, in its sole discretion:

1. If any Owner shall fail to pay any assessment due pursuant to these Rules and Regulations within thirty (30) calendar days of mailing of a bill or invoice, the Township, to the extent authorized by law, may file a municipal lien with respect to such connection to the Sewer System or related construction.

2. After any bill or assessment remains unpaid thirty (30) calendar days after mailing, and after an additional ten (10) days after mailing a warning notice to the Owner and posting a copy of it on the main entrance of the property, the water service to the property, if applicable, shall be shut off as per shut-off agreement by and between the Township of Foster and the Freeland Municipal Authority, Dated the 8th day of June, 2011.

3. Exercise any other legal remedy to collect past due amounts by appropriate action and/or to pursue equitable relief to prohibit further introduction of sewage or any other objectionable material into the sewer system by the Owner.

COLLECTION: All charges and fees shall be collected in the manner of a municipal lien filed against the Property or by any other process authorized by law by the Township, together with any costs of collection, including reasonable attorney fees.

SECTION X
PENALTIES

CIVIL FINES: Any person who shall violate any provision of this Ordinance shall be subject to a Summary Offense proceeding, to a fine of not more than Two Hundred Dollars ($200.00) for each offense, together with the cost of prosecution incurred by the Township. Each day that the violation shall continue shall be deemed as a separate offense and the violator shall be liable for such.

All fines and penalties imposed for violation of any provision of this Ordinance shall be paid to the Township for the use of the Township. Default in payment of the fines and/or costs shall make the defendant liable to imprisonment for a term not to exceed thirty (30) days.

This Ordinance shall be enforceable by the Township, the Sanitary Officer, the Code Enforcement Officer or any other person appointed by the Township to enforce this Ordinance.

CRIMINAL VIOLATIONS: Any User who willfully or negligently violates and provision(s) of the Sewer System Rules and Regulations or any order or permits issued hereunder or any state, federal or local regulation shall be subject to criminal penalties and/or imprisonment to the extent such punitive measures are allowable by law.

FALSIFYING INFORMATION: Any Person who knowingly makes any false statements, representations or certification in any application, record, report, plan or other document filed or required to be maintained, or who falsifies, tampers with, or knowingly renders inaccurate any monitoring device or other method required under the Sewer System Rules and Regulations, shall, upon conviction, be punished by a fine of not more than One Thousand Dollars ($1,000.00) or by imprisonment for not more than one (1) year, or by both. For each offense, each day of which a violation shall occur or continue shall be deemed a separate and distinct offense. In addition to the penalties provided herein, the Township Ordinances provide for the recovery of reasonable attorney's fees, court costs, court reporter fees and other expenses of litigation by appropriate suit at law against the person found to have violated an Ordinance or the orders, rules, regulations, and permits issued hereunder.

ABATEMENT OF NUISANCES: In addition to any other remedies provided in this section, any violation of the Sewer System Rules and Regulations deemed to be a nuisance by the Township may be abated by either seeking appropriate equitable or legal relief from a court of competent jurisdiction.

APPENDIX A

DEFINITIONS

Unless the context specifically and clearly indicates otherwise, the meaning of the following terms and phrases shall be as follows:

Act or **the Act** shall mean the Federal Water Pollution Control Act, also known as the Clean Water Act.

Approval shall mean the legal letter of approval issued by the Foster Township Supervisors on behalf of the Township passed by motion at a legally scheduled meeting and witnessed.

Ammonia Nitrogen as N shall mean ammonia nitrogen as determined pursuant to the procedure set forth in the latest approved edition of Standard Methods for the Examination of Water and Wastewater, as published by the American Public Health Association, Inc.

Authority shall mean the Freeland Municipal Authority, a municipality authority existing under the laws of the Commonwealth.

Biochemical Oxygen Demand or **BOD** shall mean the quantity of oxygen utilized in the biochemical oxidation of organic matter under standard laboratory procedures for five (5) days at twenty (20) degrees centigrade. The standard laboratory procedure shall be that found in the latest approved edition of Standard Methods for the Examination of Water and Wastewater, as published by the American Public Health Association, Inc.

Biosolids shall have the same definition within these rules and regulations as "Sewage Sludge".

Board of Supervisors shall mean the Foster Township Board of Supervisors.

Building Sewer shall mean the extension from the sewage drainage system of any Improved Property to the Lateral serving such Improved Property.

Commercial Establishment shall mean any room, group of rooms, building or enclosure, or group thereof, connected, directly or indirectly, to the Sewer System and used or intended for use in the operation of a business enterprise for the sale or distribution of any product, commodity, article or service, which maintains separate toilet, sink or other plumbing facilities in the room or group of rooms utilized for such business enterprise.

Commonwealth shall mean the Commonwealth of Pennsylvania.

Connection Fee shall mean the fee for connection of the property from the Main to the property line.

Connection Ordinance shall mean the Ordinance enacted by the Township requiring Owners of certain Improved Property located in the Township to connect to such Sewer and use the same in such manner as this Township may ordain.

Contractor shall mean any Person, Firm, Partnership, or Corporation who, with approval of the Owner, intends to build, construct, and install a wastewater system project within the Township.

Customer shall mean the Owner contracting for Sewer Service for their own use of use by a tenant or other occupant of a single Property, Premises, or Connection Unit; and the work "Customers" means all so contracting for Sewer Service.

Customer Facilities Fee shall mean the fee for connection from the property line to the dwelling or building.

Department of Environmental Protection or **DEP** or **PADEP** shall mean the Pennsylvania Department of Environmental Protection.

Disposal shall mean the deposition, injection, dumping, spilling, leaking or placing of solid waste into or on the land or water in a manner that the solid waste or a constituent of the solid waste enters the environment, is emitted into the air or is discharged to the waters of this Commonwealth.

Domestic Consumer Unit shall mean any room, group of rooms, building or other enclosure connected directly or indirectly to the Sewer System and occupied or intended for occupancy as separate living quarters by a family or other group or persons living together or by a person living alone; and each Domestic Consumer Unit in a double house, in a row of connected houses or in an apartment building shall be billed and shall be considered at a minimum a separate EDU.

Dwelling Unit shall mean any room, group of rooms, house trailer, apartment, condominium, cooperative or other enclosure connected directly or indirectly to the Sewer System and occupied or intended for occupancy as living quarters by an individual, a single family or other discrete group or persons, excluding institutional dormitories.

Domestic Sanitary Sewage shall mean normal water-carried household and toilet wastes discharged from a Residential Establishment. 250 mg/liter BOD_5; 250 mg/liter TSS; 25 mg/liter Total Nitrogen.

Educational Establishment shall mean any room, group of rooms, building, or other structure, connected, directly or indirectly, to the Sewer System and used or intended for use, in whole or in part, for educational purposes, including both public and private schools or colleges.

Environmental Protection Agency or **EPA** shall mean the Environmental Protection Agency of the United States of America.

Equivalent Dwelling Unit (EDU) shall mean the unit of measure on which User Charges and the Tapping Fee shall be assessed against each Residential Establishment, Commercial Establishment, Industrial Establishment, Institutional Establishment, Educational Establishment, or any combination thereof or any other Property, Premises, or Connection Unit, connected to the Sewer System, as determined in accordance with these Rules and Regulations or in any existing or subsequent resolution of the Township, and which shall be deemed to constitute an equivalent unit of service provided to the typical single-family dwelling unit.

Improved Property shall mean any property located in the Township upon which there is erected a structure intended for continuous or periodic habitation, occupancy or use by human beings or animals and from which structure Sanitary Sewage and/or Industrial Wastes shall be or may be discharged. Each side of a double house or row home having a solid vertical partition wall shall be considered a separate Improved Property.

Industrial Establishment shall mean any Improved Property used or intended for use, wholly or in part, for the manufacturing, processing, cleaning, laundering or assembling of any product, commodity, or article, or any other Improved Property from which wastes, in addition to or other than Domestic Sanitary Sewage, shall or may be discharged.

Industrial Wastes shall mean any and all solid, liquid or gaseous substance or waterborne wastes or forms of energy rejected or escaping in the course of any industrial, manufacturing, trade or business process or from the development, recovery or processing of natural resources.

Institutional Establishment shall mean any room, group of rooms, building or other enclosure connected, directly or indirectly, to the Sewer System, including institutional dormitories and Educational Establishments, which do not constitute a Commercial, Residential or Industrial Establishment.

Lateral shall mean that part of the Sewer System extending from a Sewer Main to the property line or, if no such Lateral shall be provided, then "Lateral" shall mean that portion of, or place in, a Sewer that is provided for connection of any Building Sewer.

Main or **Mains** shall mean the Township's collection and/or conveyance pipelines which are generally located in streets, highways, public ways or rights of way or private rights-of-way and which are used to collect and convey wastewater to the Treatment Plant.

Main Extension shall mean any extension of collection pipelines constructed beyond existing facilities excluding Building Sewers.

mg/l is the abbreviation for **milligrams per liter**, a measure of the concentration by weight of a substance per unit volume; in this case the weight in milligrams divided by the volume of the solution in liters, as used to identify concentrations.

Multiple Use Property shall mean any Property upon which there shall exist any combination of Residential Establishment, Commercial Establishment, Industrial Establishment, Educational Establishment, Institutional Establishment or similar establishments.

Owner or **Owners** shall be the title holder of the subdivision parcel or any and all person or persons having an interest as Owner in any Property or Premises.

Person or **Persons** shall mean any individual, partnership, company, association, society, trust, corporation, or other group or entity or any combination thereof.

pH shall mean the logarithm of the reciprocal of the concentration of hydrogen ions, expressed in grams per liter of solution, indicating the degree of acidity or alkalinity of a substance in standard units.

ppm shall mean parts per million parts water, by weight.

Premises shall mean the property or area, including improvements thereto, to which Sewer Service is or will be provided.

Project shall mean the total of the work to be performed under approval granted by the Township.

Property or **Improved Property** shall mean any property within Sewered Area upon which there is a Premises or other erected a structure intended for continuous or periodic habitation, occupancy or use by human beings or animals and from which structure Sanitary Sewage and/or Industrial Wastes shall be or may be discharged. This shall also include a vacant property, which is proposed for development of a structure or structures from which sanitary sewage, and/or industrial wastes shall be discharged.

Residential Establishment shall mean any room, group of rooms, house trailer, building or other enclosure connected, directly or indirectly, to the Sewer System and occupied or intended for occupancy as living quarters by an individual, or family, excluding institutional facilities.

Rules and Regulations shall mean the rules and regulations as adopted by Foster Township for connection and/or use of the Sewer System.

Sanitary Sewage shall mean normal water-carried household and toilet wastes from any Improved Property, exclusive of storm water runoff, surface water or ground water.

Sewage Sludge shall mean the liquid or solid sludges and other residues from a sewage collection and treatment system. The term includes materials derived from sewage sludge. The term does not include ash generated during the firing of sewage sludge in a sewage sludge incinerator, grit and screenings generated during preliminary treatment of sewage sludge at a sewage collection and treatment facility.

Sewer shall mean any pipe or conduit constituting a part of the Sewer System used or usable for sewage collection purposes.

Sewered Area shall mean the geographic area served by the Sewer System as determined and designated, from time to time, by the Township.

Sewer Service or **Service** shall mean the availability of the Sewer System or actual collection and disposal of Sanitary Sewage to or from a Premise.

Sewer System shall mean all facilities existing, at any particular time, acquired, constructed, operated, and/or owned by the Township and the Property Owner connection and installation requirements of the Township as duly approved, from time to time, by resolution of the Township.

Significant Industrial User shall mean those whose total estimated or metered discharge volume exceeds 15,000 gallons per day, have in their waste a toxic pollutant or those designated by the Township as having a potential impact on the Sewer System or the quality of the Treatment Plant's effluent.

Slug shall mean a flow rate and/or pollutant discharge rate designated by the Township as having a potential impact on the Sewer System or the quality of the Treatment Plant's effluent.

Standard Construction Specifications shall mean the current standard construction and material specifications for sanitary sewer extensions of the Township and the Property Owner connection and installation requirements of the Township as duly approved, from time to time, by resolution of the Township.

Street or **Streets** shall mean and shall include any street, road, lane, court, cul-de-sac, alley, public way or public square, including such streets as are dedicated to public use, and such streets as are owned by private Persons.

Supervisors shall mean the governing body of the Township.

Tapping Fee shall mean a fee against the owner of any Improved Property in the area served by the Sewer System which actually connects or is required to be connected pursuant to the Connection Ordinance the in effect requiring such connection or which otherwise connects to the Sewer System.

Total Nitrogen as N shall mean total nitrogen as determined pursuant to the procedure set forth in the latest approved edition of Standard Methods for the Examination of Water and Wastewater, as published by the American Public Health Association, Inc.

Total Phosphorus as P shall mean total phosphorus as determined pursuant to the procedure set forth in the latest approved edition of Standard Methods for the Examination of Water and Wastewater, as published by the American Public Health Association, Inc.

Total Solids shall mean solids determined by evaporating at 100°C a mixed sample of wastewater as determined pursuant to the procedure set forth in the latest approved edition of Standard Methods for the Examination of Water and Wastewater, as published by the American Public Health Association, Inc. Total solids include floating solids, Suspended Solids, Settleable Solids and Dissolved Solids, as defined below:

> **Suspended Solids** shall mean determined by latest approved edition of Standard Methods for the Examination of Water and Sewage as published by the American Public Health Association, Inc.
>
> **Settleable Solids** shall mean solids that settle in an Imhoff cone from a standard sample of waste and shall be determined by latest approved edition of Standard Methods for the Examination of Water and Wastewater, as published by the American Public Health Association, Inc.
>
> **Dissolved Solids** shall mean solids that are dissolved in the waste and cannot be settled, but can be determined by evaporation and shall be determined by latest approved edition of Standard Methods for the Examination of Water and Wastewater, as published by the American Public Health Association, Inc.

Township shall mean the Township of Foster, Luzerne County, Pennsylvania, a political subdivision of the Commonwealth, acting by and through its Board of Supervisors or, in appropriate cases, acting by and through its authorized representatives.

Township Engineer shall mean an engineer, retained or employed by the Township including any authorized member of the staff of such engineer.

Treatment Plant shall mean the sewage treatment plant and related facilities, including sewage transportation facilities, owned and operated by either the Authority or its successor or assign or Little Washington Wastewater Company d/b/a Suburban Wastewater Company and to which Sanitary Sewage and/or Industrial Wastes are discharged from the Sewer System for ultimate treatment and disposal.

User shall mean any Person who contributes causes or permits the contribution of wastewater into the Sewer System or the Treatment Plant from an Improved Property.

User Charges or **User Fees** shall mean the quarterly rental or charge imposed by the Township, as amended from time to time, for use or availability of use of the Sewer System as established by the Township and set forth on its Rate Schedule attached hereto as Appendix B.

Water Company shall mean the Freeland Municipal Authority or the Hazleton City Authority

END OF DEFINITIONS

APPENDIX B

RATE SCHEDULE

FLAT RATE

Tapping Fee:	$3,783.13 per EDU
Quarterly User Charge:	$165.00 per EDU

INSPECTION FEES

Construction Inspections by Foster Township	$100.00/per inspection visit
Construction Inspections by Engineer	Per Engineer's Standard Billing Rates

APPENDIX C
TAPPING FEE REPORT

DRAFT

Foster Township

Sewer Tapping Fee Calculation

November 2009

Keystone Alliance

FOSTER TOWNSHIP
SEWER SYSTEM TAPPING FEE CALCULATION

TABLE OF CONTENTS

	PAGE
Sewer System Capital Charge Summary	1
Schedule A – Connection Fee	3
Schedule B – Customer Facilities Fee	4
Schedule C – Calculation of Tapping Fee	5

EXHIBITS

Exhibit 1 – Calculation of Tapping Fee

Exhibit 2 – Conveyance System Assets – West Side

Exhibit 3 – Capacity System Assets – East Side

Exhibit 4 – Collection System Assets – West Side

Exhibit 5 – Collection System Assets – East Side

APPENDICES

Appendix A – 2008 PENNVEST Loan – Debt Service

FOSTER TOWNSHIP
SEWER SYSTEM TAPPING FEE CALCULATION

SUMMARY OF FEES CALCULATED FOR ACT 57 TAPPING FEE STUDY

On December 19, 1990, the Pennsylvania State Legislature enacted Act 209 of 1990, which amends the Act of July 31, 1968 (P.L. 805, No. 247). One of the provisions of that law requires municipalities that assess tapping or similar water and sewer fees to comply with the requirements of Act 203 of 1990, which amended Section 4 of the Municipalities Authorities Act. Subsequently, on December 30, 2003, the aforesaid Act 203 was amended by Act 57 of 2003 (hereinafter referred to as the "Act"). The intent of the Act was to clarify certain sections of the aforesaid Act 203. As a result, no municipality is permitted to impose any connection fee, customer facilities fee, tapping fee or any similar fee, except as provided specifically under the Act. The various provisions of the Act are effective on or about June 30, 2005 or immediately upon any revision of a municipality's tapping fee. Since this report addresses a change in the calculation of the tapping fee for the Foster Township (the "Township"), the new Act takes precedence.

Similar to the aforesaid Act 203, the Act provides for the imposition of a tapping fee with three separate components that are designed to allow the Township to recover specific capital costs. With the exception of assessments and to some extent reserve capacity fees, these are the only capital charges that the Township may impose. Sewer rents and other charges that are intended to recover operation, maintenance, and debt service costs are unaffected by the Act.

The three components of the Township's tapping fee are (1) connection fee; (2) customer facilities fee; and (3) tapping fee. Parenthetically, it should be noted that the term "tapping fee" refers to a one of the three components of the overall fee as well as the overall fee itself. Generally, the connection fee focuses on the cost of the facilities between the sewer and the property line while the customer facilities fee deals with the cost from the property line to the building. The tapping fee component covers the costs associated with the sewer collection lines and capacity related facilities and may, under certain circumstances, include any projected

capital improvement costs approved by the Township. The tapping fee calculation is comprised of four parts – capacity, collection, special purpose and reimbursement. Each part of the tapping fee may not be applicable to every municipality. In the case of the Foster Township, the only pertinent parts are capacity and collection. The situations surrounding the imposition of the special purpose and/or reimbursement portions of the tapping fee are not applicable to the Township at this point in time but may be imposed at a later date, if warranted.

The amounts shown below in Table 1 reflect the tapping fees calculated for the Township in accordance with Act 57 of 2003 and Act 209 of 1990. The Township is justified in charging these figures or any lesser amount.

TABLE 1
TAPPING FEE COMPONENTS

1. Connection Fee	Actual Cost
2. Customer Facilities Fee	Actual Cost
3. Tapping Fee – Per Equivalent Dwelling Unit (EDU)	
Capacity Part	$1,707.50
Collection Part	2,075.63
TOTAL	$3,783.13

FOSTER TOWNSHIP
SEWER SYSTEM TAPPING FEE CALCULATION

SCHEDULE A

CONNECTION FEE COMPONENT

The connection fee recovers the cost of the installation of the service line from the Township's sewer to the property line or curb stop of the dwelling or building being connected. To date construction of these facilities has been the responsibility of the developer or the property owner and not the Township. Accordingly, all costs associated with the installation of these facilities are not considered a part of the tapping fee calculation.

In the future the Township may need to construct these facilities on a case by case basis. When the Township does incur costs associated with the installation of these facilities, the fee may be calculated using either: (1) the actual costs of the particular installation; or (2) the average cost of similar installations or (3) the current/trended value of the average cost. The Township may require this cost to be borne by the property owner. Costs associated with the connection fee may include materials, rental equipment, labor, inspection, engineering, legal and administration.

The Township may also require, at its discretion, that an Escrow Account be established to cover any expenditure that the Township may incur associated with making the connection. The amount of any Escrow can be based upon an estimate of actual costs or based upon a flat fee per equivalent dwelling unit (EDU).

In lieu of payment of a connection fee, the Township may require the construction and dedication of these facilities by the property owner.

FOSTER TOWNSHIP
SEWER SYSTEM TAPPING FEE CALCULATION

SCHEDULE B

CUSTOMER FACILITY FEE COMPONENT

This fee covers the cost of the facilities from the property line or curb stop to the proposed dwelling or building being connected to the Township's sewer system.

The developer is responsible for the installation and cost of the service line beyond the curb stop. In the event that the service involves a single property, the installation and cost will be the responsibility of the property owner.

The Township may be required to provide inspection to insure that the facilities have been installed properly and in conformance with its regulations. Any costs attendant to inspection will be passed onto the property owner.

FOSTER TOWNSHIP
SEWER SYSTEM TAPPING FEE CALCULATION

SCHEDULE C

TAPPING FEE COMPONENT

The tapping fee is charged to allow the Township to recover capital costs associated with the original construction and any additions or improvements to the Township's sewer system as long as these facilities are still used on a regular basis. Facilities funded by others, such as a developer, and dedicated to the Township are considered contributed capital and therefore not included in the computation of this fee.

All property owners or developers connecting to the Township's sewer system are subject to a tapping fee, which may consist of up to four parts, which are calculated separately. The capacity part includes costs for the construction of those facilities that are related to the system's capacity, such as, interceptors, pumping stations, and the treatment plant. The collection part covers costs for the installation of collection mains, which for purposes of this calculation are considered to be pipe sizes of 8-inch or less. The remainder of the tapping fee includes the special purpose and the reimbursement parts. These are not applicable to the Foster Township system. Accordingly the tapping fee will focus on the capacity and collection parts only.

The Act provides for the determination of the capital costs of the system based on either:

- Original or historical costs of the system plus any capital improvement projects as well as the interest paid to date on any indebtedness associated with the system or
- Original costs trended to current dollars plus any capital improvement projects less any remaining indebtedness (principal only) associated with the system

The net capital costs (either original or trended) are divided by the capacity amount, resulting in the tapping fee per gallon. For sewer systems the capacity is generally determined by the permitted capacity of the treatment facility. For the Foster Township system this is 540,000 gallons per day. The resultant is the tapping fee per gallon. This unit amount is multiplied by

the number of gallons per equivalent dwelling unit (EDU) in the system. According to the Act the gallons per EDU is based on 90 gallons per capita per day for sewer times the average number of persons per household, as established by the United States Census Bureau. For the Township this number is 2.4. This is based on the census figure for Foster Township.

The tapping fee calculation under the original cost methodology is presented in Exhibit No. 1. The tapping fee per EDU is disaggregated between the capacity and collection part of the water system.

The original capital costs for the sewer system were extracted from the records of the Township. For purposes of this report, collection lines greater than 10-inches in diameter were considered capacity-related items. Any lines installed and paid for by a developer were extracted from the final amounts. Details of the West Side conveyance system are set forth in Exhibit No. 2. Specifics of the East Side capacity system are shown in Exhibit No. 3. The West Side collection system is detailed in Exhibit No. 4 and finally the East Side collection system particulars are shown in Exhibit No. 5.

Debt is either added or subtracted in some aspect from the calculation depending on the methodology. In 2008 the Township obtained a PENNVEST loan for additions and improvements to the collection system. Also, in 2008, the Township received funding from the USDA to fund capital projects. An amortization schedule for the PENNVEST loan is displayed in Appendix A. The interest paid on the loans is added to the original cost base while the outstanding principal on the loans is subtracted from the trended original cost base.

The charge per gallon and the related tapping fee per EDU for the collection and capacity parts are shown in Table 2 below.

TABLE 2
COMPARISON OF TAPPING FEES

COMPONENT	ORIGINAL COST
Capacity Per Gallon	$7.91
Capacity Per EDU	$1,707.50
Collection Per Gallon	$9.61
Collection Per EDU	$2,075.63
Total Per Gallon	$17.51
Total Per EDU	$3,783.13

The Act references two other aspects to the tapping fee component, specifically the Special Purpose Part and the Reimbursement Part. These are not currently applicable to the Township's tapping fee. However, if the situation arises, then either or both could be addressed and incorporated into the calculations.

The Special Purpose Part is only applicable to a particular group of customers. The Special Purpose Part is designed to recover the Township's cost for facilities that service a special purpose or specific area, such as a pump station and transmission main. Fees would be separately calculated for each applicable group and applied to new users as appropriate. The same calculation methodology used for the capacity part and the collection part would apply. At this time, the Township has not designated any special purpose part.

Where appropriate, a reimbursement component may be included in the tapping fee charged for new connections to facilities constructed by others for which a reimbursement is due to the person/developer constructing the facilities. Generally, this reimbursement will be defined in a written reimbursement agreement between the Township and the person constructing the facilities. Typically such agreements reimburse the cost of the excess capacity available for use by future connections. At this time the Township has no agreement(s) with any developer(s) which would require the calculation of a reimbursement part.

Exhibit No. 1
Foster Township
Luzerne County, Pennsylvania
Calculation of Tapping Fee
In Accordance with PA Act 57 of 2003

	EXHIBIT REFERENCE	ORIGINAL COST
A. Capacity Part		
Conveyance System - West Side	2	$2,781,071
Capacity System - East Side	3	5,202,919
Less: USDA Rural Development Grant		2,140,822
Less: H2O PA Grant		1,574,424
Total Capacity System		$4,268,744
Less: Outstanding Debt		
PennVest Loan 2008 - West Side	6	-
USDA Rural Development Loan		-
Total Debt		$0
Eligible Capacity System		$4,268,744
Capacity for Foster Township - West Side		390,000
Capacity for Foster Township - East Side		150,000
Total Capacity for Foster Township		540,000
Capacity Part Tapping Fee per Gallon		$7.91
Gallons Per EDU for Capacity Part (1)		216.00
Capacity Tapping Fee per EDU		$1,707.50

Exhibit No. 1
Foster Township
Luzerne County, Pennsylvania
Calculation of Tapping Fee
In Accordance with PA Act 57 of 2003

	EXHIBIT REFERENCE	ORIGINAL COST
B. Collection Part		
Collection System - West Side	4	$4,786,942
Collection System - East Side	5	1,406,381
Less: USDA Rural Development Grant		578,678
Less: H2O PA Grant		425,576
Total Collection System		$5,189,069
Less: Outstanding Debt		
PennVest Loan 2008 - West Side	6	-
USDA Rural Development Loan		-
Total Debt		-
Eligible Collection System		$5,189,069
Capacity for Foster Township - West Side		390,000
Capacity for Foster Township - East Side		150,000
Total Capacity for Foster Township		540,000
Collection Part Tapping Fee per Gallon		$9.61
Gallons Per EDU for Collection Part (1)		216.00
Collection Tapping Fee per EDU		$2,075.63
Total Capacity and Collection Tapping Fee per Gallon		$17.51
Total Capacity and Collection Tapping Fee per EDU		$3,783.13

(1) Gallons per EDU based on 90 gallons per capita per day and 2.4 people per household per 2000 Census.

Exhibit No. 2
Foster Township, West Side
Luzerne County, Pennsylvania
Conveyance System

Description	Year Placed in Service	Original Cost	Trended Original Cost
(1) Maintenance & Protection of Traffic	2008	$99,746	$103,082
(1) Soil Erosion & Sedimention Control	2008	7,502	7,752
(1) Clearing & Grubbing	2008	6,183	6,389
10" Gravity Sewer 0-7' deep - 1,425'	2008	51,300	53,016
10" Gravity Sewer 7-10' deep - 985'	2008	37,430	38,682
10" Gravity Sewer 10-13' deep - 460'	2008	17,940	18,540
10" Gravity Sewer 13-16' deep - 290'	2008	12,760	13,187
10" Gravity Sewer over 16' deep - 80'	2008	5,280	5,457
12" Gravity Sewer 0-7' deep - 1,140'	2008	47,880	49,481
12" Gravity Sewer 7-10' deep - 600'	2008	27,000	27,903
12" Gravity Sewer 10-13' deep - 521'	2008	25,529	26,383
12" Gravity Sewer 13-16' deep - 300'	2008	20,100	20,772
12" Gravity Sewer over 16' deep - 20'	2008	1,400	1,447
(1) Pre-cast Manholes 0-7' deep - 64	2008	35,172	36,349
(1) Pre-cast Manholes 7-10' deep - 61	2008	36,876	38,109
(1) Pre-cast Manholes 10-13' deep - 35	2008	23,082	23,854
(1) Pre-cast Manholes 13-16' deep - 10	2008	7,144	7,383
(1) Pre-cast Manholes over 16' deep - 3	2008	3,133	3,237
(1) Pre-cast Drop Manholes 7-10' deep - 5	2008	3,847	3,976
(1) Pre-cast Drop Manholes 10-13' deep - 5	2008	4,122	4,260
(1) Pre-cast Drop Manholes 13-16' deep - 4	2008	3,517	3,635
(1) Pre-cast Drop Manholes over 16' deep - 2	2008	2,198	2,272
(1) Municipal Road Restoration - 20,950 sy	2008	109,377	113,035
(1) Dirt Road Restoration - 2,030 sy	2008	2,789	2,882
(1) State Road Restoration - 1,870 sy	2008	3,597	3,717
(1) State Road Restoration - 200 sy	2008	385	398
(1) Temporary Road Restoration - 9,600 sy	2008	17,146	17,720
(1) PADOT Approved Backfill Material - 96,500 tons	2008	265,165	274,034
(1) 2-B Stone - 950 tons	2008	3,655	3,777
(1) Concrete Driveway Restoration - 170 sy	2008	7,007	7,241
(1) Treelawn & Cross Country Area Restoration - 4,400 sy	2008	12,090	12,495
(1) Paved Driveway Restoration - 750 sy	2008	4,328	4,473
(1) Seeding & Soil Supplement - 13,500 sy	2008	9,274	9,584
4" PVC Force Main - 6,600'	2008	264,000	272,830
(1) Test Pits - 97	2008	39,981	41,318
(1) Class "B" Concrete - 95 cy	2008	5,221	5,395
(1) 15" or 18" ADS-N12 - 380'	2008	4,177	4,316
(1) 18" or 24" RCCP - 380'	2008	7,831	8,093
(1) Calcium Chloride - 145 tons	2008	19,922	20,588
(2) Job Field Office	2008	7,255	7,498
(1) Project Signs - 8	2008	879	909
(2) Solids Handling Pumps - 4	2008	47,158	48,735

Exhibit No. 2
Foster Township, West Side
Luzerne County, Pennsylvania
Conveyance System

Description	Year Placed in Service	Original Cost	Trended Original Cost
Force Main Access Manholes - 6	2008	29,400	30,383
Force Main Access Manholes - 3	2008	9,000	9,301
Grinder Pump Station - 3	2008	12,000	12,401
Pump Station #1, Upper Lehigh	2008	148,000	152,950
Pump Station #2, Highland	2008	145,000	149,850
Pump Station #3, Youngstown	2008	183,000	189,121
Pump Station #4, Woodside	2008	220,000	227,358
Boring #1	2008	28,000	28,936
Boring #2	2008	28,000	28,936
Boring #3	2008	20,000	20,669
Boring #4	2008	30,000	31,003
Boring #5	2008	20,000	20,669
Boring #6	2008	20,000	20,669
(2) Mill Entire State Road Cartway - 2,500 sy	2008	4,308	4,452
(2) Overlay State Road - 2,500 sy	2008	6,348	6,560
Clean & Televise Existing Sanitary Sewer - 1,000'	2008	2,000	2,067
(1) 5" Concrete Walks - 890 sy	2008	31,792	32,856
(2) Double Yellow Line Painting - 450'	2008	163	169
(2) Single White Line Painting - 6,250'	2008	2,267	2,343
Tie-in Existing Manhole - 9	2008	18,000	18,602
Type M Inlet - 13	2008	26,000	26,870
Watertight Frame & Lid - 2	2008	750	775
(1) Concrete Curb - 50'	2008	824	852
(1) Remove and Reset Guiderail	2008	2,748	2,840
(1) Flowable Fill	2008	18,273	18,884
Total Construction Costs		$2,316,251	$2,393,720
Related Costs			
Administrative	2008	$5,512	$5,697
Legal	2008	27,561	28,483
Financial/Accounting	2008	9,187	9,494
Interest	2008	27,532	28,453
Engineering	2008	383,269	396,088
Permits	2008	5,512	5,697
Lands	2008	6,247	6,247
Contingency	2008	n/a	n/a
Total Related Costs		$464,820	$480,158
Total Conveyance System		$2,781,071	$2,873,878

(1) Allocated between Conveyance and Collections Systems based upon total pipe length.
(2) Allocated between Conveyance and Collections Systems based total expenditures.

Exhibit No. 3
Foster Township, East Side
Luzerne County, Pennsylvania
Capacity System

Description	Year Placed in Service	Original Cost (1)	Trended Original Cost (2)
Wastewater Treatment Plant Upgrade			
General/Mechanical	2008	$1,889,000	$1,998,258
Electrical	2008	402,700	425,992
Sewage Pump Stations			
General/Mechanical	2008	605,516	640,538
Electrical	2008	160,653	169,945
Conveyance System	2008	991,051	1,048,373
Land (for Pump Stations)	2008	35,000	37,024
Bond Counsel	2008	27,552	29,146
Legal	2008	23,616	24,982
Engineering	2008	737,192	779,830
Capitalized Interest	2008	102,338	108,257
Contingency	2008	216,483	229,004
Startup	2008	11,818	12,501
Total Capacity System		$5,202,919	$5,503,851

Exhibit No. 4
Foster Township, West Side
Luzerne County, Pennsylvania
Collection System

	Description	Year Placed in Service	Original Cost	Trended Original Cost
(1)	Maintenance & Protection of Traffic	2008	$263,254	$272,059
(1)	Soil Erosion & Sedimention Control	2008	19,798	20,461
(1)	Clearing & Grubbing	2008	16,317	16,863
	8" Gravity Sewer 0-7' deep - 11,197'	2008	358,304	370,288
	8" Gravity Sewer 7-10' deep - 12,335'	2008	419,390	433,417
	8" Gravity Sewer 10-13' deep - 6,453'	2008	238,761	246,747
	8" Gravity Sewer 13-16' deep - 2,689'	2008	118,316	122,273
	8" Gravity Sewer over 16' deep - 108'	2008	6,912	7,143
(1)	Pre-cast Manholes 0-7' deep - 64	2008	92,828	95,933
(1)	Pre-cast Manholes 7-10' deep - 61	2008	97,324	100,579
(1)	Pre-cast Manholes 10-13' deep - 35	2008	60,918	62,956
(1)	Pre-cast Manholes 13-16' deep - 10	2008	18,856	19,486
(1)	Pre-cast Manholes over 16' deep - 3	2008	8,267	8,544
(1)	Pre-cast Drop Manholes 7-10' deep - 5	2008	10,153	10,493
(1)	Pre-cast Drop Manholes 10-13' deep - 5	2008	10,878	11,242
(1)	Pre-cast Drop Manholes 13-16' deep - 4	2008	9,283	9,593
(1)	Pre-cast Drop Manholes over 16' deep - 2	2008	5,802	5,996
(1)	Municipal Road Restoration - 20,950 sy	2008	288,673	298,328
(1)	Dirt Road Restoration - 2,030 sy	2008	7,361	7,607
(1)	State Road Restoration - 1,870 sy	2008	9,493	9,811
(1)	State Road Restoration - 200 sy	2008	1,015	1,049
(1)	Temporary Road Restoration - 9,600 sy	2008	45,254	46,767
(1)	PADOT Approved Backfill Material - 96,500 tons	2008	699,835	723,241
(1)	2-B Stone - 950 tons	2008	9,645	9,968
(1)	Concrete Driveway Restoration - 170 sy	2008	18,493	19,112
(1)	Treelawn & Cross Country Area Restoration - 4,400 sy	2008	31,910	32,977
(1)	Paved Driveway Restoration - 750 sy	2008	11,422	11,804
(1)	Seeding & Soil Supplement - 13,500 sy	2008	24,476	25,295
	2" Low Pressure Sewer - 600'	2008	12,000	12,401
(1)	Test Pits - 97	2008	105,519	109,048
(1)	Class "B" Concrete - 95 cy	2008	13,779	14,240
(1)	15" or 18" ADS-N12 - 380'	2008	11,023	11,392
(1)	18" or 24" RCCP - 380'	2008	20,669	21,360
(1)	Calcium Chloride - 145 tons	2008	52,578	54,337
(2)	Job Field Office	2008	12,745	13,171
(1)	Project Signs - 8	2008	2,321	2,398
(2)	Solids Handling Pumps - 4	2008	82,842	85,613
	6" Gravity Sewer Lateral - 14,900'	2008	596,000	615,934
	1 1/4" Service Lateral - 300'	2008	6,300	6,511
	1 1/4" Service Lateral - 150'	2008	3,600	3,720
(2)	Mill Entire State Road Cartway - 2,500 sy	2008	7,567	7,820
(2)	Overlay State Road - 2,500 sy	2008	11,152	11,525

Exhibit No. 4
Foster Township, West Side
Luzerne County, Pennsylvania
Collection System

Description	Year Placed in Service	Original Cost	Trended Original Cost
(1) 5" Concrete Walks - 890 sy	2008	83,908	86,714
(2) Double Yellow Line Painting - 450'	2008	287	296
(2) Single White Line Painting - 6,250'	2008	3,983	4,116
(1) Concrete Curb - 50'	2008	2,176	2,248
(1) Remove and Reset Guiderail	2008	7,252	7,495
(1) Flowable Fill	2008	48,227	49,840
Total Conveyance System		$3,986,866	$4,120,211
Related Costs			
Administrative	2008	$9,488	$9,805
Legal	2008	47,439	49,026
Financial/Accounting	2008	15,813	16,342
Interest	2008	47,389	48,974
Engineering	2008	659,706	681,770
Permits	2008	9,488	9,805
Lands	2008	10,753	10,753
Contingency	2008	n/a	n/a
Total Related Costs		$800,076	$826,476
Total Conveyance System		$4,786,942	$4,946,687

(1) Allocated between Conveyance and Collections Systems based upon total pipe length.
(2) Allocated between Conveyance and Collections Systems based total expenditures.

Exhibit No. 5
Foster Township, East Side
Luzerne County, Pennsylvania
Collection System

Description	Year Placed in Service	Original Cost (1)	Trended Original Cost
Collection System	2008	$328,384	$347,377
Collection System Rehabilitation	2008	775,525	820,381
Bond Counsel	2008	7,448	7,878
Legal	2008	6,384	6,753
Engineering	2008	199,267	210,793
Capitalized Interest	2008	27,662	29,262
Contingency	2008	58,517	61,901
Startup	2008	3,194	3,379
Total Collection System		$1,406,381	$1,487,725

Appendix A
Foster Township, West Side
Luzerne County, Pennsylvania
PennVest Loan 2008

Debt Service

Period	Principal	Coupon	Interest	Debt Service	Balance
					$7,684,348.00
6/1/2008	$28,936.26	1.000%	6,403.62	$35,339.88	7,655,411.74
7/1/2008	28,960.37	1.000%	6,379.51	35,339.88	7,626,451.37
8/1/2008	28,984.50	1.000%	6,355.38	35,339.88	7,597,466.87
9/1/2008	29,008.66	1.000%	6,331.22	35,339.88	7,568,458.22
10/1/2008	29,032.83	1.000%	6,307.05	35,339.88	7,539,425.39
11/1/2008	29,057.03	1.000%	6,282.85	35,339.88	7,510,368.36
12/1/2008	29,081.24	1.000%	6,258.64	35,339.88	7,481,287.12
1/1/2009	29,105.47	1.000%	6,234.41	35,339.88	7,452,181.65
2/1/2009	29,129.73	1.000%	6,210.15	35,339.88	7,423,051.92
3/1/2009	29,154.00	1.000%	6,185.88	35,339.88	7,393,897.92
4/1/2009	29,178.30	1.000%	6,161.58	35,339.88	7,364,719.62
5/1/2009	29,202.61	1.000%	6,137.27	35,339.88	7,335,517.01
6/1/2009	29,226.95	1.000%	6,112.93	35,339.88	7,306,290.06
7/1/2009	29,251.30	1.000%	6,088.58	35,339.88	7,277,038.76
8/1/2009	29,275.68	1.000%	6,064.20	35,339.88	7,247,763.08
9/1/2009	29,300.08	1.000%	6,039.80	35,339.88	7,218,463.00
10/1/2009	29,324.49	1.000%	6,015.39	35,339.88	7,189,138.51
11/1/2009	29,348.93	1.000%	5,990.95	35,339.88	7,159,789.58
12/1/2009	29,373.39	1.000%	5,966.49	35,339.88	7,130,416.19
1/1/2010	29,397.87	1.000%	5,942.01	35,339.88	7,101,018.32
2/1/2010	29,422.36	1.000%	5,917.52	35,339.88	7,071,595.96
3/1/2010	29,446.88	1.000%	5,893.00	35,339.88	7,042,149.08
4/1/2010	29,471.42	1.000%	5,868.46	35,339.88	7,012,677.66
5/1/2010	29,495.98	1.000%	5,843.90	35,339.88	6,983,181.68
6/1/2010	29,520.56	1.000%	5,819.32	35,339.88	6,953,661.12
7/1/2010	29,545.16	1.000%	5,794.72	35,339.88	6,924,115.96
8/1/2010	29,569.78	1.000%	5,770.10	35,339.88	6,894,546.18
9/1/2010	29,594.42	1.000%	5,745.46	35,339.88	6,864,951.76
10/1/2010	29,619.09	1.000%	5,720.79	35,339.88	6,835,332.67
11/1/2010	29,643.77	1.000%	5,696.11	35,339.88	6,805,688.90
12/1/2010	29,668.47	1.000%	5,671.41	35,339.88	6,776,020.43
1/1/2011	29,693.20	1.000%	5,646.68	35,339.88	6,746,327.23
2/1/2011	29,717.94	1.000%	5,621.94	35,339.88	6,716,609.29
3/1/2011	29,742.71	1.000%	5,597.17	35,339.88	6,686,866.58
4/1/2011	29,767.49	1.000%	5,572.39	35,339.88	6,657,099.09
5/1/2011	29,792.30	1.000%	5,547.58	35,339.88	6,627,306.79
6/1/2011	29,817.12	1.000%	5,522.76	35,339.88	6,597,489.67
7/1/2011	29,841.97	1.000%	5,497.91	35,339.88	6,567,647.70
8/1/2011	29,866.84	1.000%	5,473.04	35,339.88	6,537,780.86
9/1/2011	29,891.73	1.000%	5,448.15	35,339.88	6,507,889.13
10/1/2011	29,916.64	1.000%	5,423.24	35,339.88	6,477,972.50
11/1/2011	29,941.57	1.000%	5,398.31	35,339.88	6,448,030.93
12/1/2011	29,966.52	1.000%	5,373.36	35,339.88	6,418,064.41
1/1/2012	29,991.49	1.000%	5,348.39	35,339.88	6,388,072.92
2/1/2012	30,016.49	1.000%	5,323.39	35,339.88	6,358,056.43
3/1/2012	30,041.50	1.000%	5,298.38	35,339.88	6,328,014.93

Appendix A
Foster Township, West Side
Luzerne County, Pennsylvania
PennVest Loan 2008

Debt Service

Period	Principal	Coupon	Interest	Debt Service	Balance
4/1/2012	30,066.53	1.000%	5,273.35	35,339.88	6,297,948.40
5/1/2012	30,091.59	1.000%	5,248.29	35,339.88	6,267,856.81
6/1/2012	30,116.67	1.000%	5,223.21	35,339.88	6,237,740.14
7/1/2012	30,141.76	1.000%	5,198.12	35,339.88	6,207,598.38
8/1/2012	30,166.88	1.000%	5,173.00	35,339.88	6,177,431.50
9/1/2012	30,192.02	1.000%	5,147.86	35,339.88	6,147,239.48
10/1/2012	30,217.18	1.000%	5,122.70	35,339.88	6,117,022.30
11/1/2012	30,242.36	1.000%	5,097.52	35,339.88	6,086,779.94
12/1/2012	30,267.56	1.000%	5,072.32	35,339.88	6,056,512.38
1/1/2013	30,292.79	1.000%	5,047.09	35,339.88	6,026,219.60
2/1/2013	30,318.03	1.000%	5,021.85	35,339.88	5,995,901.57
3/1/2013	30,343.30	1.000%	4,996.58	35,339.88	5,965,558.27
4/1/2013	30,368.58	1.000%	4,971.30	35,339.88	5,935,189.69
5/1/2013	30,393.89	1.000%	4,945.99	35,339.88	5,904,795.80
6/1/2013	30,419.22	1.000%	4,920.66	35,339.88	5,874,376.59
7/1/2013	30,444.57	1.000%	4,895.31	35,339.88	5,843,932.02
8/1/2013	30,469.94	1.000%	4,869.94	35,339.88	5,813,462.09
9/1/2013	30,495.33	1.000%	4,844.55	35,339.88	5,782,966.76
10/1/2013	30,520.74	1.000%	4,819.14	35,339.88	5,752,446.02
11/1/2013	30,546.17	1.000%	4,793.71	35,339.88	5,721,899.85
12/1/2013	30,571.63	1.000%	4,768.25	35,339.88	5,691,328.22
1/1/2014	30,597.11	1.000%	4,742.77	35,339.88	5,660,731.11
2/1/2014	30,622.60	1.000%	4,717.28	35,339.88	5,630,108.51
3/1/2014	30,648.12	1.000%	4,691.76	35,339.88	5,599,460.39
4/1/2014	30,673.66	1.000%	4,666.22	35,339.88	5,568,786.72
5/1/2014	30,699.22	1.000%	4,640.66	35,339.88	5,538,087.50
6/1/2014	30,724.81	1.000%	4,615.07	35,339.88	5,507,362.69
7/1/2014	30,750.41	1.000%	4,589.47	35,339.88	5,476,612.28
8/1/2014	30,776.04	1.000%	4,563.84	35,339.88	5,445,836.25
9/1/2014	30,801.68	1.000%	4,538.20	35,339.88	5,415,034.57
10/1/2014	30,827.35	1.000%	4,512.53	35,339.88	5,384,207.22
11/1/2014	30,853.04	1.000%	4,486.84	35,339.88	5,353,354.18
12/1/2014	30,878.75	1.000%	4,461.13	35,339.88	5,322,475.43
1/1/2015	30,904.48	1.000%	4,435.40	35,339.88	5,291,570.94
2/1/2015	30,930.24	1.000%	4,409.64	35,339.88	5,260,640.71
3/1/2015	30,956.01	1.000%	4,383.87	35,339.88	5,229,684.70
4/1/2015	30,981.81	1.000%	4,358.07	35,339.88	5,198,702.89
5/1/2015	31,007.63	1.000%	4,332.25	35,339.88	5,167,695.26
6/1/2015	31,033.47	1.000%	4,306.41	35,339.88	5,136,661.79
7/1/2015	31,059.33	1.000%	4,280.55	35,339.88	5,105,602.46
8/1/2015	31,085.21	1.000%	4,254.67	35,339.88	5,074,517.26
9/1/2015	31,111.12	1.000%	4,228.76	35,339.88	5,043,406.14
10/1/2015	31,137.04	1.000%	4,202.84	35,339.88	5,012,269.10
11/1/2015	31,162.99	1.000%	4,176.89	35,339.88	4,981,106.11
12/1/2015	31,188.96	1.000%	4,150.92	35,339.88	4,949,917.16
1/1/2016	31,214.95	1.000%	4,124.93	35,339.88	4,918,702.21
2/1/2016	31,240.96	1.000%	4,098.92	35,339.88	4,887,461.25

Appendix A
Foster Township, West Side
Luzerne County, Pennsylvania
PennVest Loan 2008

Debt Service

Period	Principal	Coupon	Interest	Debt Service	Balance
3/1/2016	31,267.00	1.000%	4,072.88	35,339.88	4,856,194.25
4/1/2016	31,293.05	1.000%	4,046.83	35,339.88	4,824,901.20
5/1/2016	31,319.13	1.000%	4,020.75	35,339.88	4,793,582.08
6/1/2016	31,345.23	1.000%	3,994.65	35,339.88	4,762,236.85
7/1/2016	31,371.35	1.000%	3,968.53	35,339.88	4,730,865.50
8/1/2016	31,397.49	1.000%	3,942.39	35,339.88	4,699,468.01
9/1/2016	31,423.66	1.000%	3,916.22	35,339.88	4,668,044.35
10/1/2016	31,449.84	1.000%	3,890.04	35,339.88	4,636,594.51
11/1/2016	31,476.05	1.000%	3,863.83	35,339.88	4,605,118.46
12/1/2016	31,502.28	1.000%	3,837.60	35,339.88	4,573,616.18
1/1/2017	31,528.53	1.000%	3,811.35	35,339.88	4,542,087.65
2/1/2017	31,554.81	1.000%	3,785.07	35,339.88	4,510,532.84
3/1/2017	31,581.10	1.000%	3,758.78	35,339.88	4,478,951.74
4/1/2017	31,607.42	1.000%	3,732.46	35,339.88	4,447,344.32
5/1/2017	31,633.76	1.000%	3,706.12	35,339.88	4,415,710.56
6/1/2017	31,660.12	1.000%	3,679.76	35,339.88	4,384,050.44
7/1/2017	31,686.50	1.000%	3,653.38	35,339.88	4,352,363.94
8/1/2017	31,712.91	1.000%	3,626.97	35,339.88	4,320,651.03
9/1/2017	31,739.34	1.000%	3,600.54	35,339.88	4,288,911.69
10/1/2017	31,765.79	1.000%	3,574.09	35,339.88	4,257,145.91
11/1/2017	31,792.26	1.000%	3,547.62	35,339.88	4,225,353.65
12/1/2017	31,818.75	1.000%	3,521.13	35,339.88	4,193,534.90
1/1/2018	31,845.27	1.000%	3,494.61	35,339.88	4,161,689.63
2/1/2018	31,871.81	1.000%	3,468.07	35,339.88	4,129,817.83
3/1/2018	31,898.37	1.000%	3,441.51	35,339.88	4,097,919.46
4/1/2018	31,924.95	1.000%	3,414.93	35,339.88	4,065,994.52
5/1/2018	31,951.55	1.000%	3,388.33	35,339.88	4,034,042.97
6/1/2018	31,978.18	1.000%	3,361.70	35,339.88	4,002,064.79
7/1/2018	32,004.83	1.000%	3,335.05	35,339.88	3,970,059.97
8/1/2018	32,031.50	1.000%	3,308.38	35,339.88	3,938,028.47
9/1/2018	32,058.19	1.000%	3,281.69	35,339.88	3,905,970.28
10/1/2018	32,084.90	1.000%	3,254.98	35,339.88	3,873,885.38
11/1/2018	32,111.64	1.000%	3,228.24	35,339.88	3,841,773.74
12/1/2018	32,138.40	1.000%	3,201.48	35,339.88	3,809,635.34
1/1/2019	32,165.18	1.000%	3,174.70	35,339.88	3,777,470.16
2/1/2019	32,191.99	1.000%	3,147.89	35,339.88	3,745,278.17
3/1/2019	32,218.81	1.000%	3,121.07	35,339.88	3,713,059.36
4/1/2019	32,245.66	1.000%	3,094.22	35,339.88	3,680,813.70
5/1/2019	32,272.54	1.000%	3,067.34	35,339.88	3,648,541.16
6/1/2019	32,299.43	1.000%	3,040.45	35,339.88	3,616,241.73
7/1/2019	32,326.35	1.000%	3,013.53	35,339.88	3,583,915.38
8/1/2019	32,353.28	1.000%	2,986.60	35,339.88	3,551,562.10
9/1/2019	32,380.24	1.000%	2,959.64	35,339.88	3,519,181.86
10/1/2019	32,407.23	1.000%	2,932.65	35,339.88	3,486,774.63
11/1/2019	32,434.23	1.000%	2,905.65	35,339.88	3,454,340.40
12/1/2019	32,461.26	1.000%	2,878.62	35,339.88	3,421,879.14
1/1/2020	32,488.31	1.000%	2,851.57	35,339.88	3,389,390.83

Appendix A
Foster Township, West Side
Luzerne County, Pennsylvania
PennVest Loan 2008

Debt Service

Period	Principal	Coupon	Interest	Debt Service	Balance
2/1/2020	32,515.39	1.000%	2,824.49	35,339.88	3,356,875.44
3/1/2020	32,542.48	1.000%	2,797.40	35,339.88	3,324,332.96
4/1/2020	32,569.60	1.000%	2,770.28	35,339.88	3,291,763.36
5/1/2020	32,596.74	1.000%	2,743.14	35,339.88	3,259,166.62
6/1/2020	32,623.91	1.000%	2,715.97	35,339.88	3,226,542.71
7/1/2020	32,651.09	1.000%	2,688.79	35,339.88	3,193,891.62
8/1/2020	32,678.30	1.000%	2,661.58	35,339.88	3,161,213.32
9/1/2020	32,705.54	1.000%	2,634.34	35,339.88	3,128,507.78
10/1/2020	32,732.79	1.000%	2,607.09	35,339.88	3,095,774.99
11/1/2020	32,760.07	1.000%	2,579.81	35,339.88	3,063,014.92
12/1/2020	32,787.37	1.000%	2,552.51	35,339.88	3,030,227.55
1/1/2021	32,814.69	1.000%	2,525.19	35,339.88	2,997,412.86
2/1/2021	32,842.04	1.000%	2,497.84	35,339.88	2,964,570.82
3/1/2021	32,869.40	1.000%	2,470.48	35,339.88	2,931,701.42
4/1/2021	32,896.80	1.000%	2,443.08	35,339.88	2,898,804.63
5/1/2021	32,924.21	1.000%	2,415.67	35,339.88	2,865,880.42
6/1/2021	32,951.65	1.000%	2,388.23	35,339.88	2,832,928.77
7/1/2021	32,979.11	1.000%	2,360.77	35,339.88	2,799,949.66
8/1/2021	33,006.59	1.000%	2,333.29	35,339.88	2,766,943.07
9/1/2021	33,034.09	1.000%	2,305.79	35,339.88	2,733,908.98
10/1/2021	33,061.62	1.000%	2,278.26	35,339.88	2,700,847.36
11/1/2021	33,089.17	1.000%	2,250.71	35,339.88	2,667,758.19
12/1/2021	33,116.75	1.000%	2,223.13	35,339.88	2,634,641.44
1/1/2022	33,144.35	1.000%	2,195.53	35,339.88	2,601,497.10
2/1/2022	33,171.97	1.000%	2,167.91	35,339.88	2,568,325.14
3/1/2022	33,199.61	1.000%	2,140.27	35,339.88	2,535,125.53
4/1/2022	33,227.28	1.000%	2,112.60	35,339.88	2,501,898.25
5/1/2022	33,254.96	1.000%	2,084.92	35,339.88	2,468,643.29
6/1/2022	33,282.68	1.000%	2,057.20	35,339.88	2,435,360.61
7/1/2022	33,310.41	1.000%	2,029.47	35,339.88	2,402,050.20
8/1/2022	33,338.17	1.000%	2,001.71	35,339.88	2,368,712.03
9/1/2022	33,365.95	1.000%	1,973.93	35,339.88	2,335,346.08
10/1/2022	33,393.76	1.000%	1,946.12	35,339.88	2,301,952.32
11/1/2022	33,421.59	1.000%	1,918.29	35,339.88	2,268,530.74
12/1/2022	33,449.44	1.000%	1,890.44	35,339.88	2,235,081.30
1/1/2023	33,477.31	1.000%	1,862.57	35,339.88	2,201,603.99
2/1/2023	33,505.21	1.000%	1,834.67	35,339.88	2,168,098.78
3/1/2023	33,533.13	1.000%	1,806.75	35,339.88	2,134,565.65
4/1/2023	33,561.08	1.000%	1,778.80	35,339.88	2,101,004.57
5/1/2023	33,589.04	1.000%	1,750.84	35,339.88	2,067,415.53
6/1/2023	33,617.03	1.000%	1,722.85	35,339.88	2,033,798.50
7/1/2023	33,645.05	1.000%	1,694.83	35,339.88	2,000,153.45
8/1/2023	33,673.09	1.000%	1,666.79	35,339.88	1,966,480.37
9/1/2023	33,701.15	1.000%	1,638.73	35,339.88	1,932,779.22
10/1/2023	33,729.23	1.000%	1,610.65	35,339.88	1,899,049.99
11/1/2023	33,757.34	1.000%	1,582.54	35,339.88	1,865,292.65
12/1/2023	33,785.47	1.000%	1,554.41	35,339.88	1,831,507.18

Appendix A
Foster Township, West Side
Luzerne County, Pennsylvania
PennVest Loan 2008

Debt Service

Period	Principal	Coupon	Interest	Debt Service	Balance
1/1/2024	33,813.62	1.000%	1,526.26	35,339.88	1,797,693.56
2/1/2024	33,841.80	1.000%	1,498.08	35,339.88	1,763,851.76
3/1/2024	33,870.00	1.000%	1,469.88	35,339.88	1,729,981.76
4/1/2024	33,898.23	1.000%	1,441.65	35,339.88	1,696,083.53
5/1/2024	33,926.48	1.000%	1,413.40	35,339.88	1,662,157.06
6/1/2024	33,954.75	1.000%	1,385.13	35,339.88	1,628,202.31
7/1/2024	33,983.04	1.000%	1,356.84	35,339.88	1,594,219.27
8/1/2024	34,011.36	1.000%	1,328.52	35,339.88	1,560,207.91
9/1/2024	34,039.71	1.000%	1,300.17	35,339.88	1,526,168.20
10/1/2024	34,068.07	1.000%	1,271.81	35,339.88	1,492,100.13
11/1/2024	34,096.46	1.000%	1,243.42	35,339.88	1,458,003.67
12/1/2024	34,124.88	1.000%	1,215.00	35,339.88	1,423,878.79
1/1/2025	34,153.31	1.000%	1,186.57	35,339.88	1,389,725.48
2/1/2025	34,181.78	1.000%	1,158.10	35,339.88	1,355,543.70
3/1/2025	34,210.26	1.000%	1,129.62	35,339.88	1,321,333.44
4/1/2025	34,238.77	1.000%	1,101.11	35,339.88	1,287,094.67
5/1/2025	34,267.30	1.000%	1,072.58	35,339.88	1,252,827.37
6/1/2025	34,295.86	1.000%	1,044.02	35,339.88	1,218,531.52
7/1/2025	34,324.44	1.000%	1,015.44	35,339.88	1,184,207.08
8/1/2025	34,353.04	1.000%	986.84	35,339.88	1,149,854.04
9/1/2025	34,381.67	1.000%	958.21	35,339.88	1,115,472.37
10/1/2025	34,410.32	1.000%	929.56	35,339.88	1,081,062.05
11/1/2025	34,438.99	1.000%	900.89	35,339.88	1,046,623.06
12/1/2025	34,467.69	1.000%	872.19	35,339.88	1,012,155.37
1/1/2026	34,496.42	1.000%	843.46	35,339.88	977,658.95
2/1/2026	34,525.16	1.000%	814.72	35,339.88	943,133.79
3/1/2026	34,553.94	1.000%	785.94	35,339.88	908,579.85
4/1/2026	34,582.73	1.000%	757.15	35,339.88	873,997.12
5/1/2026	34,611.55	1.000%	728.33	35,339.88	839,385.57
6/1/2026	34,640.39	1.000%	699.49	35,339.88	804,745.18
7/1/2026	34,669.26	1.000%	670.62	35,339.88	770,075.93
8/1/2026	34,698.15	1.000%	641.73	35,339.88	735,377.78
9/1/2026	34,727.07	1.000%	612.81	35,339.88	700,650.71
10/1/2026	34,756.00	1.000%	583.88	35,339.88	665,894.71
11/1/2026	34,784.97	1.000%	554.91	35,339.88	631,109.74
12/1/2026	34,813.96	1.000%	525.92	35,339.88	596,295.79
1/1/2027	34,842.97	1.000%	496.91	35,339.88	561,452.82
2/1/2027	34,872.00	1.000%	467.88	35,339.88	526,580.82
3/1/2027	34,901.06	1.000%	438.82	35,339.88	491,679.76
4/1/2027	34,930.15	1.000%	409.73	35,339.88	456,749.62
5/1/2027	34,959.26	1.000%	380.62	35,339.88	421,790.36
6/1/2027	34,988.39	1.000%	351.49	35,339.88	386,801.97
7/1/2027	35,017.55	1.000%	322.33	35,339.88	351,784.43
8/1/2027	35,046.73	1.000%	293.15	35,339.88	316,737.70
9/1/2027	35,075.93	1.000%	263.95	35,339.88	281,661.77
10/1/2027	35,105.16	1.000%	234.72	35,339.88	246,556.61
11/1/2027	35,134.42	1.000%	205.46	35,339.88	211,422.19

Appendix A
Foster Township, West Side
Luzerne County, Pennsylvania
PennVest Loan 2008

Debt Service

Period	Principal	Coupon	Interest	Debt Service	Balance
12/1/2027	35,163.69	1.000%	176.19	35,339.88	176,258.50
1/1/2028	35,193.00	1.000%	146.88	35,339.88	141,065.51
2/1/2028	35,222.33	1.000%	117.55	35,339.88	105,843.18
3/1/2028	35,251.68	1.000%	88.20	35,339.88	70,591.50
4/1/2028	35,281.05	1.000%	58.83	35,339.88	35,310.45
5/1/2028	35,310.45	1.000%	699.49	35,339.88	0.00
Total	$7,684,348.24		$797,893.02	$8,481,571.20	

APPENDIX D
EDU ALLOCATIONS

EDU's shall be generally assigned as described below or as amended from time to time by the Township. However, the Township reserves the right to deviate from the allocations described below at its discretion based upon anticipated use:

CLASSIFICATION	BILLING UNIT
DOMESTIC ESTABLISHMENTS	
Domestic Consumer Unit	1 EDU
COMMERCIAL ESTABLISHMENTS	
Each restaurant, bar room or other Commercial Establishment which regularly dispenses food and/or beverages for consumption on the Premises	1 EDU per 10 seats, which are regularly intended for customer use 1 EDU each additional 10 seats or fraction thereof
Each Retail Store with meat, vegetables, bakery, etc. food preparation facility	1 EDU per food preparation station
Each Car Wash	2 EDUs per Car Wash Bay
Each Laundromat	1 EDU per washer
Each Motel or Hotel (1)	1 EDU per 1-4 rental rooms 1 EDU each additional rooms of fraction thereof
All other establishments not separately classified above, and not constituting a combination Domestic Consumer Unit and Commercial Establishment (2)	1 EDU per public restroom plus 1 EDU per 5 employees or fraction thereof.
COMBINATION DOMESTIC/COMMERCIAL ESTABLISHMENTS	
Combination Domestic Establishment and Commercial Establishment located in one structure and owned, occupied and operated by the same person; provided, however, that this subsection shall not be applicable in those cases where the Commercial Establishment regularly dispenses food and/or beverages for consumption on the premises	2 EDUs (minimum), additional EDUs at the discretion of the Township based upon actual use

INSTITUTIONAL ESTABLISHMENTS	
School	1 EDU per 10 students, faculty, and staff
Boarding School [3]	1 EDU per 3 students
Convalescent homes and similar establishments [3]	½ EDU per bed
Fire House or Municipal Building	1 EDU
Church	1 EDU
Beauty parlor or barber shop Attached to or part of Dwelling Unit Not Attached	 1EDU per 2 chairs 1EDU per chair
Medical Center	3 EDUs per Doctor/Dentist
Mobile (Manufactured) Home Park	1 EDU per Pad (whether or not occupied)
Funeral Home	1 EDU Each Property

Notes:

1. Provided however that where a business of a restaurant or bar room is conducted in connection with any motel or hotel, and additional and separate sewer rental or charge shall be made payable as defined herein subject to minimum of 1 EDU.

2. This sewer rental or charge shall be computed on the basis of the average daily number of employees for the month immediately preceding the date of the bill.

3. Each school, public or private, per student based upon the daily average number of students enrolled on days when the school was in session during the immediately preceding full school term. Employees shall be classified as students. Please note that the Township considers day cares, pre-school, and similar establishments to be considered schools as listed within the Institutional Establishments.

APPENDIX E

STANDARD CONSTRUCTION SPECIFICATIONS

Intent of Specifications: The specifications are for the purpose of illustrating the general character and extent of the work and are subject to such modifications as may be found necessary or advisable either before or during the prosecution of the work, and the Owner shall conform to and abide by whatever supplementary drawings and explanations may be required by the Township for the purpose of illustrating the work. Should any incidental work or materials are necessary for the proper carrying out of the intent of the specifications, either directly or indirectly, the Owner agrees to perform all such work and furnish and install all such materials as if the same were fully specified.

Table of Contents

Description	Section
Trenching, Backfilling, and Compacting	02221
Asphaltic Concrete Paving	02510
Manholes	02605
Pre-Cast Vaults	02606
Gravity Wastewater Sewer	02731
Force Mains	02732
Low Pressure Sewer Pipe (Force Main)	02733
Valve Boxes	02966
Valves and Flushing Connections	02967
Cast-in-place Concrete	03300
Sewage Pumping Stations	11100

SECTION 02221 - TRENCHING, BACKFILLING AND COMPACTING

PART 1 - GENERAL

1.1 SECTION INCLUDES

A. Trench Excavation.

B. Bedding and backfilling.

C. Surface Restoration.

1.2 DEFINITIONS

A. Subgrade: Trench bottom prepared as specified to receive pipe bedding, concrete cradle or concrete encasement or the bottom of excavations prepared to receive pipe line structures.

B. Bedding: That stone material placed under the pipe.

C. Haunching: That stone material placed from pipe bottom to the pipe centerline.

D. Initial Backfill: That stone material from the pipe centerline to twelve (12) inches above top of pipe.

1.3 REFERENCES

A. American Association of State Highway and Transportation Officials:

1. AASHTO T99 - Moisture-Density Relations of Soils, Using a 5.5 lb. Rammer and a 12 in. Drop.
2. AASHTO T191 - Standard Method of Test for Density of Soil In-Place by the Sand Cone Method.

B. The "PennDOT Sections" noted herein refer to sections contained in the Commonwealth of Pennsylvania Department of Transportation Specifications Publication 408 latest version. The references pertain only to materials, construction equipment, methods and labor. The payment provisions do not apply to work to be performed under this Contract.

C. All workmanship, materials and contractor's responsibility for all work in and adjacent to PennDOT right-of-way shall be in compliance with PennDOT regulations, specifications and requirements. Where information in the specification is contradictory to current PennDOT requirements, PA requirements shall govern. No additional compensation will be considered for claims of misleading or contradictory requirements.

D. Commonwealth of Pennsylvania Department of Transportation Specifications.

1. PennDOT 408, Section 703 Aggregates.

E. State Code: Commonwealth of Pennsylvania, Pennsylvania Code, Title 67. Transportation, Department of Transportation, Chapter 459, Occupancy of Highways by Utilities, July 1989 (PennDOT Chapter 459).

F. State Publication: Commonwealth of Pennsylvania, Pennsylvania Code, Title 67, Transportation, Department of Transportation, Chapter 203, Work Zone Traffic Control (PennDOT Chapter 203).

PART 2 - PRODUCTS

2.1 MATERIALS

A. Select Backfill: Excavated material free of cinders, ashes, refuse, vegetable or organic material, boulders larger than 6", rocks, stone, or other material which, in the opinion of the Professional, is unsuitable. If the excavated material is found to be unsuitable, the Contractor is required to backfill with suitable material at his expense. The Contractor may use suitable material from other project areas at no additional cost to the Township.

B. Aggregate Backfill, Bedding and Haunching: Fine aggregates and coarse aggregates conforming to AASHTO and PennDOT requirements, see plan for dimensions.

C. Classification of Backfill, Bedding and Haunching Materials:

1. Aggregate Backfill of trench bottoms over-excavated at direction of Professional to correct unstable trench bottom conditions: PennDOT 2A or as directed.

2. Pipe Bedding and Haunching:

a. AASHTO M43 Gradation No. 7 or 8.

3. Initial Backfill:
a. AASHTO M43 Gradation No. 7 or 8.

4. Final Backfill:

a. Select Backfill: Unless otherwise noted on drawings.

D. Underground Warning Tape:

1. Printed polyethylene tape, three inches minimum width, color coded, one inch minimum lettering, printed with name of utility buried below, and suitable for installation in all soil types.
2. Non-magnetic for ductile iron pipe.
3. Magnetic for PVC and HDPE pipe.
4. Provide for:

a. Electric Power Lines, Cables, Conduit and Lighting Cables – RED
b. Gas, Oil, Steam, Petroleum, or Gaseous Materials – YELLOW
c. Communications, Alarm or Signal Lines, Cables or Conduit – ORANGE
d. Potable Water – BLUE
e. Reclaimed Water, irrigation, and Slurry Lines – PURPLE
f. Sewers and Drain Lines – GREEN
g. Sludge – BROWN

PART 3 - EXECUTION

3.1 TRENCH PREPARATION AND EXCAVATION

A. The Contractor shall notify PA One Call (1-800-242-1776) in accordance with the regulations of the Act. For those existing utilities on Township property, contact the Township and with their assistance locate the utilities on private property.

B. General: Excavation of every description and of whatever substances encountered shall be performed to the lines and grades indicated on the drawings and specified herein, or as directed by the Professional.

1. Excavation shall be made by open cut, unless written permission to tunnel or bore is given by the Professional or is specifically outlined in the Specifications or shown on the Drawings.
2. Trenches may be excavated and backfilled either by machinery or by hand as the Contractor may elect, provided, however, the Contractor shall use hand excavation where necessary to protect existing structures, utilities, or private or public properties and provided, further, that backfilling shall be done by hand to the extent hereinafter specified.
3. The Contractor shall have no claim for extra compensation due to the fact that hand excavation, instead of machine excavation, may be made necessary from any cause whatsoever.

C. Stripping, Storing and Restoring Surface Items: The Contractor shall remove all topsoil, paving, sub-paving, curbing, gutters, brick, paving block, granite curing, flagging or other similar materials, and grub and clear the surface over the area to be excavated. He shall properly store and preserve such materials that may be required for future use in restoring the surface. The Contractor shall be responsible for any loss or damage to said materials because of careless removal or neglectful or wasteful storage, disposal, or use of the materials. Any excavated materials not required for backfill or restoration shall be disposed of by the Contractor at his expense.

1. All materials which may be removed, including rock, earth and sand taken from the excavation, shall be stored, if practical, in the roadway or right-of-way or such other suitable place and in such manner as the Professional will approve.
2. If more materials are removed from any trench than can be backfilled over the completed pipe or stored in the street, leaving space for traffic, the excess materials shall be removed and stored at a suitable site provided by the Contractor.

3. The Contractor shall, at his own expense, bring back as much of the approved materials so removed as may be required to properly refill the trench or excavation.
4. When directed by the Professional, the Contractor shall furnish such other suitable materials as may be necessary to properly refill the trench at no additional cost to the Township.
5. The Contractor shall restore all shrubbery, fences, poles or other property and surface structures, removed or disturbed as a part of the Work, to a condition equal to that before the Work began, furnishing all labor and materials incidental thereto, without any additional cost to the Township.
6. The Professional may mark certain trees, shrubs, or other items that are not to be disturbed or damaged. In the event such items are disturbed or damaged, they shall be replaced or compensated for at the Contractor's expense.
7. Any tree which is approved by the Professional for removal shall be cut into four foot lengths and become the property of the Contractor and shall be removed from the site.

D. The Contractor must work around existing utilities at no additional cost to the Township for this work. If the Contractor must repair or replace any damaged utilities, he must do so at his own expense.

E. Width of Trench: Pipe trenches shall be sufficiently true in alignment to permit the pipe to be laid in the approximate center of the trench. The trench shall be wide enough to provide a free working space on each side of the pipe.

F. Length of Trench:

1. No trench shall be opened more than 100 feet in advance of the pipe lines laid. Contractor shall provide all safety items such as sheeting, shoring and bracing.
2. The Contractor shall limit all trench openings to a distance commensurate with all rules of safety and the Erosion and Sedimentation Control Plan.
3. If the Work is stopped either totally or partially by his own accord or the direction of others, the Contractor shall refill the trench and temporarily repave or restore over the same at his expense and the trench shall not be opened until he is ready to proceed with the construction of the pipeline.

G. Pumping and Draining: The Contractor shall remove by pumping, draining, or otherwise, any water which may accumulate in the trenches and other excavations and shall build all dams and do all other work necessary to keep the trenches or other excavations as free from water as possible. All pumping operations are subject to Erosion and Sedimentation Control measures.

1. Where it is impractical to completely drain the trench, special pipe of jointing materials may be authorized at no additional expense to the Township.
2. While the pipelines are being laid, the Contractor shall have sufficient pumping machinery ready for immediate use.
3. All surface waters shall be prevented from entering the open ditches or excavations by proper grading of the surface in the vicinity of the excavation.
4. Sediment laden water will be pumped to an appropriately located "Dirtbag" as shown on Erosion and Sedimentation Control Drawing.

H. Accommodations of Drainage: The Contractor shall keep gutters, sewers, drains and ditches open at all times so that the flow of storm or other waters shall not be obstructed. If

the material excavated from the trenches must temporarily extend over gutters or other waterways, it shall be the duty of the Contractor to plank or bridge over the gutters, without extra compensation, so that the flow of water is not impeded.

I. Protection of Utilities, Property and Structures: The existence and location of underground utilities as indicated on the Drawings is presented merely to serve as a notification that such utilities do exist in the general proximity of the work. Any utilities not shown, or not located as shown, shall not be cause of the Contractor to deny responsibility for their protection and/or repair during construction.

1. The Contractor shall notify all utility companies in advance of construction, to include requesting the companies to establish location of their utilities, in accordance with Pennsylvania Act 287/172, as amended. Cooperate with agents of these companies during the progress of the work. Procedures for emergency action and repairs to utilities shall be established with the utility company prior to commencement of the work. During the course of his work, if the Contractor damages any of the aforementioned utilities, he shall immediately follow the procedure of emergency action and repair as established at their own expense. The Contractor shall determine the location of all utility lines on private property, with the assistance of the utility owner when on private property.
2. Whenever the Contractor, during the progress of the excavation, shall uncover service pipes or lines, which because of injury or age are in poor condition, he shall immediately notify the proper authority in order that steps may be taken for replacement or repair. Locations of repairs, and the procedures of repairs that have been made shall be recorded by the Contractor.
3. The Contractor shall, at his own expense, sustain in their places, and protect from direct or indirect injury, all pipes, conduits, existing sewerage systems, septic tanks, tile fields, and other structures or property in the vicinity of his work, whether above or below the ground, or that may appear in the trench. He shall at all times have a sufficient quantity of repair pipe, timber and plank, chains, ropes, etc., on the ground and shall use them as necessary for sheeting his excavations and for sustaining or supporting any structures that are uncovered, undermined, endangered, threatened, or weakened, whether such structures are or are not shown on the Drawings.
4. Pipes and underground conduits exposed as a result of the Contractor's operations shall be adequately supported along their entire exposed length by timber or planking, installed in such manner that the anchorage of the supporting members will not be disturbed or weakened during the backfilling operation. Backfill of selected material shall be carefully rammed and tamped under and around the supports and all supports shall be left in place as a guard against breakage of the supported structure due to trench settlement. No additional payment will be due to the Contractor for material left in place nor for the labor of installing and maintaining supports.
5. The cost of all work related to utility protection and repair shall be included in the price of pipe installed. No separate payment will be made for utility relocation or repairs.

J. Where lines are to be constructed on rights-of-way or easements in open areas, the maximum width of trench at the top specified hereinbefore may be exceeded only if the construction is kept entirely within the limits of the right-of-way or easements and can be carried on without damage to adjoining property. The angle of slope shall be the angle at which the trench bank will stand without sliding.

K. In locations other than rights-of-way or easements, the Professional may, as warranted by working conditions, and where permitted by the Pennsylvania Department of Labor and Industry requirements, waive the requirements that the maximum width of trench at the top shall not exceed the dimensions specified hereinbefore.

3.2 PIPE BEDDING AND TRENCH BACKFILL

A. Bedding and Haunching: The trench shall be excavated to a depth of six inches below the outside diameter of the pipe barrel, or deeper if so specified. The resultant subgrade shall be undisturbed, or compacted as approved by the Professional if disturbed. The bedding and haunching shall then be prepared by placing thoroughly compacted aggregate, shaped to conform to the bottom portion of the pipe or compacted against the bottom portion of the pipe, to a vertical distance of three inches above the lowest outside surface of the pipe. Contractor is required to properly haunch the pipe before any additional backfilling is allowed.

B. Special Bedding:

1. Concrete Cradle and Concrete Encasement: if concrete cradle and/or encasement is indicated on the Drawings or required by the Professional, the trench shall be excavated to a depth of twelve inches below the outside of the barrel of pipes. All of this excavation may be done by machine.
2. Unstable Subgrade: Where the bottom of the trench at subgrade is found to be unstable or to include ashes, cinders, any type or refuse, vegetable, or other organic material, or large pieces or fragments of inorganic material, which, in the opinion of the Professional, should be removed, the Contractor shall excavate and remove such unsuitable material to the width and depth recommended by the Professional.

    a. Before pipe is laid, the subgrade shall be made by backfilling with aggregate material, as directed by the Professional, in six inch (compacted thickness) layers thoroughly tamped and the bedding prepared as hereinbefore specified.
    b. Aggregate Backfill when used at the direction of the Professional to stabilize trench subgrade will be paid for in accordance with the unit price Bid for Miscellaneous Aggregate Backfill per the actual dimensions of the area backfilled in accordance with Section 02221, exclusive of the pipe bedding.
    c. Additional excavation required to remove unstable material will be paid for in accordance with the applicable unit price Bid for Miscellaneous Unclassified Excavation.

3. Special Foundations: Where the bottom of the trench at the subgrade is found to consist of material which is unstable to such a degree that, in the opinion of the Professional, it cannot be removed and replaced with an approved material thoroughly compacted in place to support the pipe properly, the Contractor shall construct a foundation for the pipe, consisting of piling, timbers or other materials, in accordance with plans prepared by the Professional. Compensation for such additional work shall be in accordance with the General Conditions.

C. Backfilling Methods:

1. General: Backfilling shall not be done in freezing weather except by permission of the Professional, and it shall not be done with frozen material. Do not backfill when the material already in the trench is frozen.

   a. Where Aggregate Backfill is not indicated on the Drawings or specified herein, and in the opinion of the Professional should be used in any part of the Work, the Contractor shall furnish and backfill with aggregate as directed.
   b. Payment will be made in accordance with the unit price Bid for Miscellaneous Aggregate Backfill in lieu of select backfill.

2. In or adjacent to state highways all backfill shall be in accordance with PennDOT requirements.

D. Initial Backfill: Following placement of bedding and haunching material, initial backfill shall be placed to a depth of twelve (12) inches over the crown of the pipe. Compact the initial backfill in maximum twelve (12) inch (compacted thickness) layers. Use vibratory compactors of such size that will not damage the pipe or manual compaction methods as approved by the Professional. Bring the backfill up both sides of the pipe simultaneously to prevent displacement of the pipe.

E. Aggregate Backfill to Restoration Depth (within State Highway or as directed by the Professional): From six inches above the top of the pipe to Restoration Depth, the trench shall be backfilled by hand or by approved mechanical methods. Backfill in this section of the trench shall be aggregate backfill material subject to limitations specified and consolidated by compacting in six inch layers. Any consolidation method utilizing water such as jetting or puddling will not be permitted. Consolidation shall proceed from the center of the trench to the sides to prevent arching.

F. Select Backfill to Restoration Depth: From twelve (12) inches above the top of the pipe to restoration depth, the trench shall be backfilled by hand or by approved mechanical methods. Backfill in this section of the trench shall be excavated material subject to limitations specified and consolidated by tamping in eight inch layers or other approved mechanical methods. Any consolidation method utilizing water, such as jetting or puddling will not be permitted. Consolidation shall proceed from the center of the trench to the sides to prevent arching. If the backfill contains too much moisture for optimum compaction, the Contractor shall dry the common backfill or provide aggregate backfill at no additional cost to the Township.

   1. Compacted layers may exceed eight (8) inches provided the Contractor can demonstrate that the compaction results as described in the follow sub-section (Compacting and Compaction Tests) are being obtained throughout the lifts of backfill.

G. Underground Warning Tape: For the purpose of early warning and identification of buried pipes during future trenching or other excavation, provide continuous identification tapes in trenches. Install in accordance with printed recommendations of the tape manufacturer, and as modified herein. Bury tape at a depth of 12 inches below grade; in pavements, measure 12 inches down from subgrade of pavement. Tape to be installed along all mains, and laterals.

H. Compacting and Compaction Tests:

1. The Contractor will be required to perform a sample backfilling of a pipe segment early on in the construction, adequately justifying to the Professional that his backfill and compaction operations are adequate to obtain the desired compaction results.
2. Use mechanical tampers to compact backfill materials in trench refill operations to produce a density of backfill in each layer of not less than those specified below as a percentage of maximum standard density determined in accordance with AASHTO T99 or PennDOT requirements.

    a. Areas subject to vehicular traffic: 100%.
    b. Grassed areas: 95%.

3. During the course of backfilling and compacting work, the Professional or Township may, at any location or depth of trench, require the Contractor to make tests to determine whether the Contractor's compaction operations are sufficient to meet specified requirements, at the Contractor's expense. The Contractor will retain the services of an independent agency approved by the Township for all compaction tests. Contractor will be required to repair all backfill that does not conform to the compaction requirements at no additional cost to the Township. The Contractor shall provide ample notice to assure all soil testing is done.

3.3 RESTORATION AND CLEAN-UP OF SURFACE

A. Restoration by Contractor:

1. The Contractor shall restore all driveways, parking lots, sidewalks, curbing, gutters, shrubbery, guiderail, fences, mailboxes, coachlight standards, poles, sod or other property and surface structures removed or disturbed as a part of the Work to a condition equal to that before the Work began, furnishing all labor and materials incidental thereto. Cost of such restoration will be considered part of the price bid and no additional compensation will be made for such work.

B. Clean-up and Maintenance of Surfaces:

1. General: During construction, the surfaces of all areas including, but not limited to, roads, streets, and driveways shall be maintained on a daily basis to produce a safe, desirable, and convenient condition. Streets shall be swept and flushed after backfilling, and recleaned as dust, mud, stones and debris caused by the Work, or related to the Work again accumulates. Failure of the Contractor to perform this work may be cause for the Township to order the work by others, and backcharge all costs to the Contractor.

    a. All surplus materials furnished by the Contractor and temporary structures shall be removed form the site by the Contractor.
    b. All dirt, rubbish and excess earth from the excavation shall be disposed of by the Contractor in a manner and place acceptable to all governing agencies.
    c. The construction site shall be left clean at the end of each working day to the satisfaction of the Township and Professional.
    d. All surplus materials furnished and delivered by the Contractor will be removed by the Contractor.

2. Repair or Correction of Unsatisfactory Conditions: All unsatisfactory conditions resulting from the work shall be corrected.

   a. Any hazardous condition caused by the Work, on any surface, shall be repaired or corrected within two hours of observance or notification of its existence. If repairs or corrections are not made within this period, the Township will have the work completed with the resulting cost subtracted from the Contractor's next monthly Application for Payment. Any such costs shall be deemed a reduction in the total amount due to the Contractor under the Contract and no subsequent reimbursement shall be made to the Contractor by the Township for these costs.
   b. There will be no additional payment made for maintenance work.

C. Restoration of Meadows and Cultivated Fields:

1. General: Final restoration of all areas shall be performed in accordance with the Specifications for the particular land use as herein defined.

a. Final restoration shall be performed no later than the start of the next planting season following construction. The planting season shall be as established by the U.S. Agricultural Service for the area of construction for pasture and meadows.
b. Topsoil shall be free from subsoil, brush, weeds, or other litter, clay lumps and stones, but may contain decaying vegetable matter as is present in good topsoil.
c. Precautions shall be exercised as necessary to conform with laws relating to erosion and sedimentation control.
d. Seed shall be labeled for the current growing season. Germination tests of seeds shall be made not more than six months prior to seeding. Seed which has become wet, moldy or otherwise damaged shall not be used.
e. All seed mixtures formulas shall be submitted to the Professional for approval prior to seeding.
f. The Contractor shall be responsible to produce a stand of grass in all seeded or sodded areas. Erosion, drought, or any other condition encountered shall not relieve the Contractor of this requirement.

2. Lawns: Finish grade and sodding in accordance with applicable sections of these specifications.
3. Pasture Grass, and Meadow Grass: Prior to construction, the full depth of the existing topsoil, but no less than 12 inches, shall be stripped from all areas anticipated to be disturbed, and shall be stockpiled during construction. Upon completion of the construction, all topsoil removed shall be replaced. As the final class of material is applied, bringing the area to finished grade, the depth of topsoil replaced shall not be less than the depth removed.

   a. The sod and/or seed mixture shall be as stated in other specification sections.

   b. If the topsoil thickness is less than twelve (12) inches, the Contractor shall import suitable topsoil so that a good stand of grass can be established at no additional cost to the Township.

END OF SECTION 02221

SECTION 02510 - ASPHALTIC CONCRETE PAVING

PART 1 - GENERAL

1.1 RELATED DOCUMENTS

A. Drawings and general provision of Contract, including General and Supplementary Conditions and Division 1 Specification Sections apply to this Section.

1.2 SUMMARY

A. Asphaltic concrete paving to include Superpave Base and Wearing Course.

B. Aggregate base course is specified in Section 02221.

C. Proofrolling of prepared subbase is included in this Section.

D. Installation of Tack Coats.

E. Sealing is included in this Section.

F. The work required by this section includes walkway paving, paving of vehicle parking spaces, installation of line striping and signage, and parking lot paving.

1.3 SUBMITTALS

A. General: Submit the following in accordance with Conditions of Contract and Division I Specification Sections.

B. Material Certificates signed by material producer and contractor, certifying that each material item complies with or exceeds specified requirements.

1.4 QUALITY ASSURANCE

A. Perform work in accordance with Pennsylvania Department of Transportation (PennDOT) Publication 408 latest revision.

B. Obtain materials from same source throughout.

1.5 SITE CONDITIONS

A. Weather Limitations: Apply tack coats and asphalt when ambient temperature is above 50 deg. F and when temperature has not been below 35 deg. F for 12 hours immediately prior to application. Do not apply when base is wet or contains an excess of moisture, nor when base is frozen.

B. Construct hot-mixed asphalt surface course when atmospheric temperature is above 40 deg. F and when base is dry. Do not construct asphalt courses between October 31 and April 1.

C. Grade Control: Establish and maintain required lines and elevations.

1.6 REGULATORY REQUIREMENTS

A. Conform to applicable code for paving work.

PART 2 - PRODUCTS

2.1 MATERIALS

A. General: Use locally available materials and gradations that exhibit a satisfactory record of previous installations.

B. Coarse Aggregate: Sound, angular crushed stone, or crushed gravel, complying with (PennDOT) Section 703.2 Type 2A.

C. Fine Aggregate: Sharp-edged natural sand or sand prepared from stone, gravel, or combinations thereof, complying with PennDOT Section 703.1

D. Herbicide Treatment: Commercial chemical for weed control, registered by Environmental Protection Agency. Provide granular, liquid, or wettable powder form.

1. Available Manufacturers: Subject to compliance with requirements, manufacturers offering products that may be incorporated in the work include, but are not limited to the following:

a. Ciba-Geigy Corp.
b. Dow Chemical U.S.A.
c. E.I. DuPont de Nemours & Co., Inc.
d. FMC Corp.
e. Thompson-Hayward Chemical Co.
f. U.S. Borax and Chemical Corp.

E. Joint sealant shall conform to PG 64-22.

F. Tack Coat: in accordance with PennDOT Section 460.

G. Superpave 9.5 mm Wearing Course PennDOT Section 409.

H. Bituminous joint sealing material PG 64-22 hot, for sealing joints - PennDOT Bulletin 25.

I. Superpave 25 mm Base Course PennDOT Section 309.

J. Signage and line striping, refer to drawings for material specifications and locations.

PART 3 - EXECUTION

3.1 MISCELLANEOUS ASPHALTIC CONCRETE GUIDELINES

A. For those paving areas that are to be paved, the following general criteria shall apply:

1. All existing material shall be removed to subgrade elevation. Where the paving is to remain, the edges of the reconstructed areas shall be sawcut. The subgrade shall be compacted. Remove all unsuitable subgrade, and replace with compacted PennDOT 2A aggregate at no additional cost to the Owner.
2. Install stone subbase and paving to indicated thicknesses.
3. Adjust the elevation of all manhole covers, valve tops, catch basin grates and similar structures, so that the top elevation is below the finished paving surface by 1/2-inch.
4. Provide all line striping and symbols on the completed paving.
5. Contractor to seal edges of paving.

3.2 SURFACE PREPARATION

A. Sawcut existing paving as required. Remove and dispose of existing paving down to the aggregate base course level. Paving shall be taken to an approved disposal facility by the Contractor.

B. Remove loose material from compacted subbase surface immediately before applying herbicide treatment.

C. Proof-roll prepared subbase surface to check for unstable areas and areas requiring additional compaction. Remove all soft and yielding subbase and subgrade and replace with new subbase and subgrade.

D. Notify Engineer of unsatisfactory conditions. Do not begin paving work until unsatisfactory subbase areas have been corrected and are ready to receive paving. There shall be no additional payment for the repair of the unsatisfactory subbase areas.

E. Maintain proper roadway cross sections and an adequate ditch line where applicable. Pull suitable material from the ditch line toward the center of the roadway. Level all high spots and ruts and remove all unsuitable material during this operation.

F. Herbicide Treatment: Apply chemical weed control agent in strict compliance with manufacturer's recommended dosages and application instructions. Apply to compacted, dry subgrade prior to the installation of the stone base course.

G. Tack Coat: Apply to contact surfaces of previously constructed asphalt and surfaces abutting or projecting into hot-mixed asphalt pavement. Distribute at rate of 0.05 to 0.15 gal. per sq. yd. of surface.

H. Allow to dry until at proper condition to receive paving.

I. Exercise care in applying bituminous materials to avoid smearing of adjoining concrete surfaces. Remove and clean damaged surfaces.

J. Beginning of the installation means acceptance of the subgrade.

3.3 PLACING MIX

A. General: Place hot-mixed asphalt mixture on prepared surface, spread, and strike off. All material shall be placed in accordance with PennDOT Publication 408. Place areas inaccessible to equipment by hand. Place each course to required grade, cross-section, and compacted thickness.

B. Bituminous Placement: Place in strips not less than 10 feet wide, unless otherwise acceptable to Engineer. After first strip has been placed and rolled, place succeeding strips and extend rolling to overlap previous strips.

Complete the Superpave concrete base course for a section before placing wearing course.

C. Immediately correct surface irregularities in course behind paver. Remove excess material forming high spots with shovel.

D. Joints: Make joints between old and new pavements, or between successive days' work, to ensure continuous bond between adjoining work. Construct joints to have same texture density, and smoothness as other sections of hot-mixed asphalt course. Clean contact surfaces and apply tack coat.

E. Spade bits or saws shall be used to neatly remove existing paving from areas where new paving is to meet existing paving. All such joints shall be butt joints. Feathered joints will not be permitted. Square up existing paving edges to a depth of one and one half inches (1-1/2") and in straight lines where practical, where it abuts new paving.

F. Materials and debris resulting from milling and cutting shall become the contractor's property and shall be hauled by him from the site.

G. Place asphalt courses within 24 hours of applying tack coat.

H. Place Superpave base course to compacted thicknesses as shown on the drawings.

I. Place Superpave wearing course to compacted thickness as shown on the drawings.

J. Splashes of bituminous materials shall be removed from all surfaces exposed to general view, including manhole and valve box covers.

K. Thicknesses of the various paving courses shall be the thickness after compaction. All bituminous paving courses shall be compacted. Heat and roll (iron) seams between adjacent passes of surface course.

L. Slope all finished paving to drain toward gutters, inlets and other storm water facilities. Fill low spots, pot holes, bird baths, etc. Slope paving away from buildings.

M. Do not block downspouts with new paving.

3.4 ROLLING

A. General: Begin rolling when mixture will bear roller weight without excessive displacement.

B. Compact mixture with hot hand tampers or vibrating plate compactors in areas inaccessible to rollers.

C. Breakdown Rolling: Accomplish breakdown or initial rolling immediately following rolling of joints and outside edge. Check surface after breakdown rolling and repair displaced areas by loosening and filling, if required, with hot material.

D. Second Rolling: Follow breakdown rolling as soon as possible, while mixture is hot. Continue second rolling until mixture has been evenly compacted.

E. Finish Rolling: Perform finish rolling while mixture is still warm enough for removal of roller marks. Continue rolling until roller marks are eliminated and course has attained 95 percent laboratory density.

F. Patching: Remove and replace paving areas mixed with foreign materials and defective areas. Cut out such areas and fill with fresh, hot, hot-mixed asphalt. Compact by rolling to specified surface density and smoothness.

G. Protection: After final rolling, do not permit vehicular traffic on pavement until it has cooled and hardened.

H. Erect barricades to protect paving from traffic until mixture has cooled enough not to become marked.

3.5 JOINT SEALING

A. Joints shall be sealed between old and new pavement or successive day's pour and between paving and concrete.

B. Sealant shall be placed 6" each side of joints (12" width).

C. Cover sealant with a coating of sand.

3.6 TOLERANCES

A. Flatness: Maximum variation of 1/4 inch measured with 10-foot straight edge.

B. Scheduled Compacted Thickness: Within 1/4 inch.

C. Variation from True Elevation: Within 1/2 inch.

3.7 PROTECTION OF NEWLY COMPLETED SURFACES

A. The contractor shall protect the newly completed bituminous surfaces from vehicular traffic or other damaging loads until adequate stability and adhesion have been attained and the materials have sufficiently cured to prevent distortion, flushing of the bituminous material to the surface or excessive loss of aggregate.

3.8 LINE STRIPING, MARKINGS AND SIGNAGE

A. Install all line striping and traffic markings in accordance with PennDOT Publication 408, Section 962.

B. Install signage markings, and line striping per the specifications on the drawings.

END OF SECTION 02510

SECTION 02605 - MANHOLES

PART 1 - GENERAL

1.1 SECTION INCLUDES

A. Precast concrete manholes.

1.2 RELATED SECTIONS

A. Gravity Wastewater Sewer: Section 02731.

B. Cast-in-Place Concrete: Section 03300.

1.3 REFERENCES

A. American Society for Testing and Materials:

1. ASTM A48 - Gray Iron Castings.
2. ASTM A307 - Carbon Steel Externally Threaded Standard Fasteners.
3. ASTM A615 - Deformed and Plain Billet-steel Bars for Concrete Reinforcement.
4. ASTM C139 - Concrete Masonry Units for Construction of Catch Basins and Manholes.
5. ASTM C270 - Mortar for Unit Masonry.
6. ASTM C361 - Reinforced Concrete Low Head Pressure Pipe.
7. ASTM C443 - Joints for Circular Concrete Sewer and Culvert Pipe, Using Rubber Gaskets.
8. ASTM C478 - Precast Reinforced Concrete Manhole Sections.
9. ASTM C923 - Resilient Connectors Between Reinforced Concrete Manhole Structures and Pipes.
10. ASTM D2146 - Propylene Plastic Molding and Extrusion Materials.

B. American Association of State Highway and Transportation Officials (AASHTO) Standards as referenced throughout these Specifications.

C. American Water Works Association:

1. AWWA C302, AWWA Standard for Reinforced Concrete Water Pipe-Noncylinder Type, Not Prestressed.

D. Federal Specifications:

1. FS SS-S-210A, Sealing compound, Preformed Plastic, for Expansion Joints and Pipe Joints (Type 1 Rope Form).

1.4 SUBMITTALS

A. Shop Drawings and Product Data:

1. Manufacturer's published detail drawings, modified to suit design conditions if required, and Contractor prepared drawings as applicable.

2. Manufacturer's descriptive literature and specifications covering the product specified. Include installation information.

B. Certificates:

1. Manufacturer's certification that components and products will be manufactured in accordance with specified reference standards for components and products.

1.5 QUALITY ASSURANCE

A. Shop Inspection:

1. All materials furnished by the Contractor shall be certified by the supplier for compliance with the pertinent specifications. Shop inspections and testing may be required. The cost of shop testing shall be borne by the supplier or the Contractor.

B. Field Inspection:

1. All materials shall be furnished and installed and tested for defects in material and/or workmanship in the manner specified and in the presence of and as approved by the Engineer.

C. Source Quality Control:

1. Maintain uniform quality of products and component compatibility by using the products of one manufacturer in the case of precast reinforced concrete manholes.

2. Obtain certificate of construction compliance with ASTM C478 from the precast reinforced concrete manhole manufacturer. Submit same certificate as part of required submittals.

D. Initial Manholes: Construct first manhole in the Project to demonstrate the following, and serve as the minimum acceptable conditions of construction through the Project. No additional compensation allowed for initial manhole requirement.

1. Demonstrate manhole base construction methods.
2. Demonstrate manhole component sealing in the case of precast reinforced concrete manholes.
3. Demonstrate manhole stop alignment.
4. Demonstrate pipe opening sealing.
5. Demonstrate method of adjustment of manhole frame and cover to grade and manhole frame and cover attachment.
6. Demonstrate successful manhole acceptance test.

1.6 PRODUCT DELIVERY, STORAGE, AND HANDLING

A. Transport and handle precast reinforced concrete manhole components and other products specified herein in a manner recommended by this respective manufacturers of such to prevent damage and defects. Through-wall lifting holes are not permitted in manhole component construction.

B. Store precast reinforced concrete manhole components in accordance with manufacturer's recommendations to prevent joint damage and contamination. Exercise such care in storage of other specified products as recommended by the respective manufacturers.

1.7 SITE CONDITIONS

A. Environmental Requirements: In no instance set or construct manhole base on subgrade containing frost.

PART 2 - PRODUCTS

2.1 BASIC MATERIALS

A. Cast-in-Place Concrete: Meet requirements of Section 03300.

B. Waterproofed Mortar: Material composition meeting requirements of ASTM C270, Type M with waterproofing admixture included.

C. Concrete Masonry Units for Manholes: Commercially manufactured solid precast segmental concrete masonry units meeting requirements of ASTM C139.

D. Manhole Steps:

1. Material: Aluminum alloy 6061-T6, with standard mill finish or, polypropylene coated.

2. Type: Drop-front design with non-slip serrated step surface.

3. Coating: Coat portion of step which will be embedded in concrete with high-build bituminous paint.

E. Manhole Frame and Cover: Gray iron castings conforming to ASTM A48, Class No. 30, designed for AASHTO Highway Loading Class HS-20. Provide castings of uniform quality, free from blowholes, porosity, hard spots, shrinkage distortion or other defects. Covers to be self-sealing. Frame and cover design, dimensions and weight equal to MHR 701 as manufactured by Quirin.

1. Finish: Bearing surfaces machined to prevent rocking and rattling under traffic. Casting surfaces shotblast cleaned and coated with asphalt paint, non-tacky drying.

2. Identification: Cast the word DANGER SEWER – DO NOT REMOVE COVER integrally on cover in two inch size raised letters.

3. Frame hold-down bolts: ASTM A307.

4. Anchor Bolts: J or L shape with standard coarse thread ends, ASTM A307.

F. Watertight Manhole Frame and Cover: Gray iron castings conforming to previously specified requirements for Manhole Frame and Cover and equal to MHR 701 I.C. as manufactured by Quirin. The cover shall have a built in O-ring and a non-penetrating pickhole.

G. Preformed Plastic Sealing Compound: FS SS-S-210A, type 1, Rope Form, of either bitumastic base compound or butyl rubber base compound, and shipped protected in a removable two piece wrapper. Size cross-section of rope form to provide squeeze-out of material around entire interior and exterior circumference when joint is completed.

H. PVC Waterstop for Cast-in-Place Base: Gasket Type waterstop composed of virgin polyvinyl chloride (PVC) such as manufactured by Fernco Joint Sealer Co.; CMA Concrete Manhole Adapter.

I. Manhole Inserts: HDPE construction as manufactured by Parson.

J. Heat Shrinkable Wrap: Wrap to cover riser rings and joints in their entirety as equal to wrapid seal as manufactured by CANUSA.

2.2 PRECAST REINFORCED CONCRETE MANHOLE COMPONENTS

A. Materials and Construction: Conforming to requirements specified in ASTM C478 except as follows:

1. Concrete: Composition and compressive strength conforming to ASTM C478 except use Type II or Type III cement in manhole components and increase compressive strength to 4500 psi (at 28 days) in precast bases.

2. Casting and Curing: Wet cast and steam curing process in accordance with Section 3.6.11 and 3.7.2 of AWWA C302.

3. Manhole Steps: Factory installed in manhole components, prealigned vertically, spaced on equal centers, and located the minimum distance from ends of risers and top sections as indicated on drawings.

4. Manhole Component Seals: Manhole component joints factory formed for self-centering concrete to concrete bearing employing either a rubber compression gasket or preformed plastic sealing compound.

a. Rubber Compression Gasket: Composition conforming to ASTM C361 or ASTM C443.

b. Preformed Plastic Sealing Compound: As specified previously.

c. Heat Shrinkable Wrap: Wrap to cover all joints in their entirety as equal to Wrapid Seal as manufactured by CANUSA.

5. Manhole Component Design: Base, tapered and straight riser section, and top section dimensions and diameters, not consistent with ASTM C478, are as indicated on drawings.

B. Pipe Openings: Custom preformed during manufacturing in each base and riser section requiring such, to accommodate type of pipe and pipe opening seal provided.

1. Pipe Opening Seals: Resilient gasket type, cast integrally with manhole component conforming to requirements specified in ASTM C923 and of the following acceptable pipe seals:

a. A-LOK Products Corporation; A-LOK Manhole Pipe Seal.

b. Scales Manufacturing Corporation; RES-SEAL.

c. Thunderline Corporation; LOCK-SEAL Modular Wall and Casing Seal.

d. Dual Seal Gaskets, Inc.; DUAL SEAL II.

C. Precast Top Sections: Of materials and construction as specified previously except additional and differing requirements as follows:

1. Hold Down Bolt Inserts: Factory cast in top section no less than two 3/4 inch threaded inserts or slotted inserts to accommodate manhole frame hold down bolts. Threaded inserts of three inches depth. Both insert types designed for an ultimate load in tension of 12,500 pounds. Inserts factory plugged for shipping. Coordinate insert location with manhole component manufacturer to assure proper location in top sections.

2. Flat Slab Tops: Tops factory formed to properly accept and support required manhole frame and cover and formed to join riser section in a matching joint.

3. Eccentric Cone Tops: Manufacture to same minimum wall thickness and with same area of circumferential steel reinforcement as riser sections.

D. Precast Grade Rings: Leveling and adjusting units of three inches or four inches thickness of materials and constructions as specified previously. Factory cast grade rings with hold down bolt holes matching location of same in manhole frame. Design must provide for full bearing of manhole frame.

E. Coatings:

1. Prepare surfaces to be coated in accordance with the written instructions of the coating manufacturer, including cleaning, sandblasting or acid etching as necessary.

2. Factory coat entire exterior of precast manhole components with two coats of Pennsbury 32-B-4 PENNOXY-TAR, or equal, to dry film thickness of 7 or 8 mils per coat, coating to be repaired in the field as warranted.

PART 3 - EXECUTION

3.1 LOCATING & INSPECTION

A. All manholes will be field located and verified for depth and alignment by the Contractor and Engineer. **No manholes shall be ordered until the actual location of such is determined in the field.**

B. Inspect precast reinforced concrete manhole components in accordance with requirements of ASTM C478 regarding repairable defects and defects subject to rejection by the Engineer.

C. All material found during the progress of the work, either before or after installation, to have cracks, flaws or other defects will be rejected by the Engineer. All defective materials furnished by the Contractor shall be promptly removed from the site.

D. Unless noted on the drawings or otherwise directed by the Engineer, all manholes shall be set such that to top of rim is flush with existing or final grade.

3.2 PREPARATION

A. Keep pipe and manhole interiors cleared of debris as construction progresses.

3.3 MANHOLE CONSTRUCTION METHODS

A. Cast-In-Place Concrete Manhole Base (if required)

1. Form and pour concrete in accordance with requirements of Section 03300. Additional requirements as follows:

   a. Vibrate poured concrete using mechanical vibrator of a type and design approved by Engineer. Use vibrators of type capable of transmitting vibration to concrete in frequencies of not less than five thousand impulses per minute.
   b. Form and pour joint monolithically in manhole base top to match joint of adjoining precast riser section. Use template as obtained from precast concrete manhole component manufacturer of manhole components used in the Project.

   c. Do not place precast riser sections on cast-in-place bases for a minimum of 48 hours after pour.

2. Install sewer piping in cast-in-place manhole bases prior to pouring the concrete. Install PVC Waterstop on pipes entering and leaving manhole base prior to pouring concrete. Install PVC Waterstop in accordance with manufacturer's written instructions.

3. Use 4,500 psi concrete as specified in Section 03300.

4. Coat bases in accordance with the requirements for precast manhole components.

B. Precast Concrete Bases: Install bases on a six inch deep compacted layer of same material used for pipe bedding.

1. When using prefabricated pipe opening seals for connecting pipes into manhole, and such seals create an annular space on interior and exterior of manhole wall after pipe connection is made, fill such annular spaces with preformed plastic sealing compound.

   a. Tightly caulk sealing compound into annual spaces, completely filling the spaces, and render the installation watertight.

   b. Following sealing compound installation, trowel compound surface smooth and flush with interior face of manhole.

C. Concrete Channel Fill: Field pour concrete channel fill for each manhole base or provide and install precast channels:

1. Form inverts directly in concrete channel fill.

2. Accurately shape invert to a semi-circular bottom conforming to inside of connecting pipes, and steel trowel finish to a smooth dense surface.

3. Make changes in size and grade gradually.

4. Make changes in direction of entering sewer and branches to a true curve of as large a radius as manhole size will permit.

5. Make slopes gradual outside the invert channels.

6. Use 3,000 psi concrete as specified in Section 03300.

D. Manhole Wall Erection: Provide precast reinforced concrete straight riser, tapered riser and top sections necessary to construct complete manholes. Fit the different manhole components together to permit watertight jointing and true vertical alignment of manhole steps.

1. If rubber compression gaskets are used between sections, install gaskets and join sections in accordance with written instructions of manhole component manufacturer.

2. Preformed plastic sealing compound must be used between all sections, installed in accordance with manufacturer's recommendations, and join sections also in accordance with written instructions of manhole component manufacturer.

a. Prime joint surfaces if required by preformed sealing compound manufacturer.

b. If sealing compound is installed in advance of section joining, leave exposed half of two piece protective wrapper in place until just prior to section joining.

c. Use preformed sealing compound as the sole element utilized in sealing section joints from internal and external hydrostatic pressure.

d. Following manhole section installation, trowel sealing compound surface smooth and flush with interior face of manhole.

e. Make pipe connections into manhole walls as specified previously for pipes connecting into manhole bases.

E. Lifting Hole Sealing: Seal with properly designed tapered rubber plugs. Drive plugs into holes in such a manner to render holes completely water and air tight.

F. Frame and Cover Installation: Where required, make final adjustment of frame to elevation using the following materials:

1. Precast Grade Rings:

a. Set precast grade rings in Water-Proof Mortar. Mortar thickness not to exceed 3/4 inch maximum and 3/8 inch minimum. Wet, but do not saturate precast grade rings immediately before laying.

b. Pre-set grade rings to proper plane and elevation using wedges or blocks of cementitious material not exceeding one square inch wide on all sides. No more than four wedges or blocks per grade ring permitted. Incorporate wedges or blocks in fresh mortar in a manner to completely encase each. Crown fresh mortar to produce squeeze-out between grade rings. Tool exposed joints with appropriately shaped tool and compact mortar edge into joints. Clean off excess mortar prior to initial mortar set.

2. Concrete Masonry Leveling Units: Lay segmental concrete masonry units to line and in radial course with completely filled mortar joints. Flush cut exposed horizontal and vertical joints on manhole interior and exterior. Leave exterior surface ready for parging.

3. Use concrete masonry units upon written approval of Engineer. Primary leveling unit shall be precast grade rings.

4. Parge the outside of finished concrete masonry leveling units with a minimum of 1/2 inch thick waterproof mortar.

5. Bolt manhole frames in place on manhole top section, or on leveling units if required, after installing 1/2 inch thick preformed plastic sealing compound on bearing surface of manhole frame. Remove excess sealing compound squeeze-out after manhole frame is bolted in place.

6. Use bolts of sufficient length to properly pass through leveling units, if any, engage full depth of manhole top section inverts and allowing enough threaded end to pass through manhole frame to properly tighten nut and washer. Tighten manhole frame bolts after mortar has cured.

G. Plugging Pipe Openings: Plug pipe openings in manholes where such openings are required for future pipe connections.

1. Use masonry units and waterproofed mortar laid up to prevent deterioration.

2. Install such materials to meet exfiltration limits and to allow future removal without damage to manhole.

H. Manhole Insert: The manhole frame rim shall be clean from all debris. Once insert is installed and manhole cover is re-installed, there shall be a flush surface from frame lip to cover.

1. Adjustments of inserts shall be the Contractor's responsibility.

I. Heat Shrinkable Wrap: As per manufacturer's instructions.

3.4 TESTING MANHOLES

A. General

1. Conduct tests in presence of and to complete satisfaction of the Engineer.

2. Should a manhole not satisfactorily pass testing, discontinue manhole construction in the Project until such manhole does test satisfactorily.

3. Provide tools, materials (including water), equipment and instruments necessary to conduct manhole testing specified herein.

   a. Vacuum Testing Equipment:

      1) Use vacuum apparatus equipped with necessary piping, control valves and gauges to control air removal rate from manhole and to monitor vacuum.
      2) Provide an extra vacuum gauge of known accuracy to frequently checktest equipment and apparatus.
      3) Vacuum testing equipment and associated testing apparatus subject to Engineer's approval.
      4) Provide seal plate with vacuum piping connections for

4. Prior to testing clean manholes thoroughly and seal openings, both to the complete satisfaction of the Engineer. Seal openings using properly sized plugs.

5. Perform testing with frames installed. Include the joint between the manhole and manhole frame in the test.

6. The Contractor may elect to make a test for his own purposes prior to backfilling. However, conduct tests of the manholes for acceptance, only after the backfilling has been completed.

B. Vacuum Test Procedure:

1. Perform vacuum testing in accordance with the testing equipment manufacturer's written instructions.

2. Draw a vacuum of ten inches of mercury and close the valves.

3. Consider manhole acceptable when vacuum does not drop below nine inches of mercury for the following manhole sizes and times:

   a. Four foot diameter - 60 seconds
   b. Five foot diameter - 75 seconds
   c. Six foot diameter - 90 seconds

C. Exfiltration Test Procedure:

1. Complete fill manhole to top of frame with water.

2. Allow water filled manhole to stand four hours prior to testing to allow absorbing in materials.

3. At commencement of test, fill manhole to top lip of manhole frame.

4. During a consecutive four hour period, keep an accurate record of the amount of water to be added because of exfiltration.

5. Consider manhole acceptable when exfiltration rate does not exceed a rate of 0.038 gallons a day per inch of manhole diameter per vertical foot of manhole.

D. Repair and Retest: Determine source or sources of leaks in manholes failing acceptable limits.

1. Repair or replace defective materials and workmanship, as is the case, before conducting such additional Manhole Acceptance Tests and such subsequent repairs and retesting as required until manholes meet test requirements.

2. Materials and methods used to make manhole repairs must meet with Engineer's approval prior to use.

3. Make repairs, replacements and retests at no additional expense to Owner.

END OF SECTION 02605

SECTION 02606 - PRE-CAST VAULTS

PART 1 - GENERAL

1.1 RELATED DOCUMENTS

A. Drawings and general provisions of the Contract, including General and Supplementary Conditions and other Division 1 Specification Sections apply to this Section.

1.2 STIPULATIONS

A. The Specifications Sections "General Conditions", "Special Requirements", and "General Requirements" form a part of this Section by this reference thereto and shall have the same force and effect as if printed herewith in full.

1.3 REFERENCES

A. American Society for Testing and Materials:

1.	ASTM A307	Carbon Steel Externally Threaded Standard Fasteners
2.	ASTM A615	Deformed and Plain Billet-Steel Bars for Concrete Reinforcement
3.	ASTM C139	Concrete Masonry Units for Construction of Catch Basins and Manholes
4.	ASTM C361	Reinforced Concrete Low Head Pressure Pipe
5.	ASTM C478	Precast Reinforced Concrete Manhole Sections
6.	ASTM C923	Resilient Connectors Between Reinforced Concrete Manhole Structures and Pipes

B. American Association of State Highway and Transportation Officials (AASHTO) Standards as referenced throughout these Specifications.

C. Federal Specifications:

1.	FS SS-S-210A	Sealing compound, Preformed Plastic, for Expansion Joints and Pipe Joints (Type 1 Rope Form).

1.4 SUBMITTALS

A. Submit detailed drawings modified to suite site conditions.

1.5 QUALITY ASSURANCE

A. Shop Inspection:

1. All materials furnished by the Contractor shall be certified by the supplier for compliance with the pertinent Specifications. Shop inspections and testing may be required. The cost of shop testing shall be borne by the supplier or the Contractor.

B. Field Inspection:

1. All materials shall be furnished and installed and tested for defects in material and/or workmanship in the manner specified and in the presence of and as approved by the Engineer.

C. Source Quality Control:

1. Maintain uniform quality of products and component compatibility by using the products of one manufacturer in the case of precast reinforced concrete valve vaults.

1.6 PRODUCT DELIVERY, STORAGE, AND HANDLING

A. Transport and handle precast reinforced concrete vaults and other products specified herein in a manner recommended by the respective manufacturers of such to prevent damage and defects.

1.7 SITE CONDITIONS

A. Environmental Requirements: In no instance set or construct vaults on subgrade containing frost.

PART 2 - PRODUCTS

2.1 BASIC MATERIALS

A. Cast-in-Place Concrete: Meet requirements of Section 03300.

B. Waterproofed Mortar: Material composition meeting requirements of ASTM C270, Type M with waterproofing admixture included.

C. Concrete Masonry Units for Manholes and Vaults: Commercially manufactured solid precast segmental concrete masonry units meeting requirements of ASTM C139.

D. Preformed Plastic Sealing Compound: FS SS-S-210A, Type 1, Rope Form, of either bituminastic-base compound or butyl-rubber base compound (CS-102), and shipped protected in a removable two-piece wrapper. Size cross-section of rope form to provide squeeze-out of material around entire interior and exterior circumference when joint is completed.

2.2 PRECAST REINFORCED CONCRETE VAULT COMPONENTS

A. Materials and Construction: Conforming to requirements specified in ASTM C478 except as follows:

1. Concrete: Composition and compressive strength conforming to ASTM C478 except use Type II or Type III cement in vault components and increase compressive strength to 4,500 psi (at 28 days) in precast bases.
2. Casting and Curing: Wet cast and steam curing process in accordance with Section 3.6.11 and 3.7.2 of AWWA C302.
3. Component Seals: Vault component joints factory formed for self-centering concrete to concrete bearing employing either a rubber compression gasket or preformed plastic sealing compound.

a. Rubber Compression Gasket: Composition conforming to ASTM C361 or ASTM C443.
b. Preformed Plastic Sealing Compound: As specified previously.
c. Heat Shrinkable Wrap: Wrap to cover all joints in their entirety as equal to Wrapid Seal as manufactured by CANUSA.

B. Pipe Openings: Custom preformed during manufacturing in each base and riser section requiring such, to accommodate type of pipe and pipe opening seal provided.

1. Pipe Opening Seals: Resilient gasket type, cast integrally with manhole component conforming to requirements specified in ASTM C923 and of the following acceptable pipe seals:

a. A-LOK Products Corporation; A-LOK Manhole Pipe Seal.
b. Scales Manufacturing Corporation; RES-SEAL.
c. Thunderline Corporation; LOCK-SEAL Modular Wall and Casing Seal.
d. Dual Seal Gaskets, Inc.; DUAL SEAL II.

C. Vault Coatings:

1. Prepare surfaces to be coated in accordance with the written instructions of the coating manufacturer, including cleaning, sandblasting or acid etching as necessary.
2. Factory coat entire exterior locate below grade of precast manhole components with 2 coats of Pennsbury 32-B-4 PENNOXY-TAR, or equal, to dry-film thickness of 7- or 8-mils per coat, coating to be repaired in the field as warranted.

D. Aluminum Access Hatch: 300#/SF loading, 316 stainless steel hardware with spring assist locking hold open arm, 1.5-inch frame drain coupling, and slam lock. Holliday Series W1S.

E. OSHA Safety Grate: Aluminum "I" bar construction with fusion epoxy orange coating and stainless steel hardware. Haliday Series X

F. Aluminum Access Ladder: Aluminum construction with slip resistant ribbed rungs, flat wall mounting stand-offs. Haliday Series L1B.

G. Aluminum Ladder Extension: Aluminum and stainless steel construction with locking pins Haliday Series L1E.

H. Precast vaults shown with watertight manhole covers shall also meet the frame and cover standards within the "Manholes" section.

PART 3 - EXECUTION

3.1 LOCATING AND INSPECTION

A. All vaults will be field located by the Contractor and Engineer. No vaults shall be ordered until the actual location of such is determined in the field.

B. Inspect precast reinforced concrete vault components in accordance with requirements of ASTM C478 regarding repairable defects and defects subject to rejection by the Engineer.

C. All material found during the progress of the work, either before or after installation, to have cracks, flaws or other defects will be rejected by the Engineer. All defective materials furnished by the Contractor shall be promptly removed from the site.

3.2 CONSTRUCTION METHODS

A. Precast Concrete Bases: Install bases on a 6-inch-deep compacted layer of same material used for pipe bedding.

1. Vault base shall be installed in a level position.

2. When using prefabricated pipe opening seals for connecting pipes into vault, and such seals create an annular space on interior and exterior of vault wall after pipe connection is made, fill such annular spaces with:

   a. Tightly caulk sealing compound into annual spaces, completely filling the spaces, and render the installation watertight.

   b. Following sealing compound installation, trowel compound surface smooth and flush with interior face of manhole.

3. Concrete Fill: Field pour concrete floor for each vault base as indicated.

   a. Accurately shape invert to a semi-circular bottom conforming to inside of connecting pipes, and steel trowel finish to a smooth dense surface.

   b. Make changes in direction of entering sewer and branches to a true curve of as large a radius as vault size will permit.

   c. Make slopes gradual outside the invert channels.

   d. Use 3,000 psi concrete as specified in Section 03300.

B. Lifting Hole Sealing: Seal with properly designed tapered rubber plugs. Drive plugs into holes in such a manner to render holes completely water and air tight. Sealing of lifting holes with grout not permitted.

C. Riser Section: Pre-cast or cast-in-place riser sections shall be constructed and/or installed to match the existing grade. The riser section shall include the hatch, ladder or steps, and ladder-up extension device.

END OF SECTION 02606

SECTION 02731 - GRAVITY WASTEWATER SEWER

PART 1 - GENERAL

1.1 SECTION INCLUDES

A. Wastewater Gravity Sewer Pipelines.

B. Service Connection Piping.

C. Pipeline Testing.

1.2 RELATED SECTIONS

A. Trenching, Backfilling, and Compacting: Section 02221.

B. Cast-in-Place Concrete: Section 03300.

1.3 QUALITY ASSURANCE

A. Source Quality Control.

1. Shop Tests and Inspection

a. All material furnished by the Contractor shall be certified by the Contractor for compliance with the pertinent specifications. Shop inspections and testing may be required. The cost of shop testing shall be borne by the Contractor.

B. Disposition of Defective Material: All material found during the progress of the work, either before or after installation, to have cracks, flaws or other defects will be rejected by the Engineer. All defective materials furnished by the Contractor shall be promptly removed by him from the site at his own expense.

1.4 REFERENCES

A. American Society for Testing and Materials.

1. ASTM D2321 - Underground Installation of Flexible Thermoplastic Sewer Pipe.

2. ASTM D3034 - Type PSM Poly (Vinyl Chloride) (PVC) Sewer Pipe and Fittings.

3. ASTM D3212 - Joints for drain and sewer plastic pipes using flexible elastomeric seals.

4. ASTM F477 - Elastomeric seals (Gaskets) for joining plastic pipe.

1.5 SUBMITTALS

A. Shop Drawings and Product Data: Furnish completely dimensioned shop drawings, catalog cuts or other data as required to provide a complete description of piping and piping specialties.

B. Certificates

1. Certified records or reports of results of shop tests, such records or reports to contain a sworn statement that shop tests have been made as specified.

2. Manufacturer's sworn certification that pipe will be manufactured in accordance with specified reference standards for each pipe type.

1.6 PRODUCT DELIVERY, STORAGE, AND HANDLING

A. Transport, handle and store pipe materials and other products specified herein in a manner recommended by the respective manufacturers to prevent damage and defects.

1.7 SITE CONDITIONS

A. Environmental Requirements

1. Keep trenches dewatered until pipe joints have been made and concrete cradle or encasement, if any, have cured.

2. Under no circumstances lay pipe in water or on bedding containing frost.

3. Do not lay pipe when weather conditions are unsuitable, as determined by the Engineer, for pipe laying work.

PART 2 - PRODUCTS

2.1 SEWER PIPE AND FITTINGS

A. For pipe joints, use rubber gaskets suitable for conveying domestic sewage.

B. Polyvinyl Chloride Pipe (PVC)

1. Pipe: Type PSM SDR-35, ASTM D3034 unless specified otherwise in the Drawings.

2. Fittings: Conforming to same ASTM standard requirements for pipe.

3. Joints: Push-on with elastomeric gasket, ASTM D3212; and ASTM F477 for gasket specifications.

C. Ductile Iron Pipe (DIP)

1. Pipe: ANSI A21.50 and ANSI A 21.51

2. Wall Thickness Class (Buried): Class 50.

3. Fittings: Gray iron or ductile iron ANSI A21.10.

4. Joints:

a. Rubber Gasket Joints (Buried): ANSI A 21.11

1) For buried pipe installation, provide push-on or mechanical joints except where other types of joints are indicated on the Drawings or required by the Specifications.

5. Cement Lining: Ductile Iron pipe and fittings shall be coated inside with double thickness cement mortar lining (1/8") and seal coated, all in conformance with ANSI A21.4 and AWWA C104.

6. Pipe and Fittings Coating: Factory coated inside and out with bituminous material; minimum 1 mil dry thickness. Bituminous material and finished coat conforming to seal coat requirements in ANSI A21.4.

2.2 SERVICE CONNECTION PIPE AND FITTINGS

A. Polyvinyl Chloride Pipe (PVC): As specified for sewer pipe and fittings; six-inch diameter.

B. Pipe Plugs: Designed for permanent installation and removable. Obtain plugs from the pipe manufacturer.

PART 3 - EXECUTION

3.1 PREPARATION

A. Earthwork: Perform earthwork for sewer installation as specified in Trenching, Backfilling, and Compacting: Section 02221.

3.2 PIPE LAYING

A. General: All pipe shall be laid to a uniform line and grade between manholes, socket ends upgrade, with a firm and even bearing along the barrel of the pipe, close joints and smooth invert. The spigot end of the pipe is to be centered in, shoved tight and secured against the bell or socket of the previously laid pipe. The interior of each pipe shall be cleaned of all excess joint and foreign material before the next pipe is laid. The pipe shall be laid in the bedding materials as specified in Section 02221. Pipe-laying shall commence at the lowest point and proceed upgrade. At the close of each day's work, and at such other times when pipe is not being laid, the open end of the pipe shall be protected with a close fitting stopper.

B. Joints: Make joints in strict accordance with manufacturer's installation instructions.

C. Laying Specified Types of Plastic Pipe: Installation and joint assembly according to ASTM D 2321.

D. Construction Control

1. The use of laser equipment will be permitted. Cut sheets for all manhole runs as required.

2. Regardless of control used, the Contractor shall provide alternative verification of grade as work progresses. Pipe not laid to proper line and grade will be removed and reconstructed at the Contractor's expense.

3. Provide temporary bench marks for grade verification.

E. Variations: The Engineer reserves the right to vary the line and/or grade from that shown on the drawings for pipe lines and manholes when such changes may be necessary or advantageous. No claims will be allowed for changes in location or grade except as such changes are made after trenching has been done. Payment for all variances shall be in accordance with the unit pricing as indicated in the bid and <u>all excavation shall be unclassified</u>.

F. Sanitary Sewer near Water Mains. The Engineer may vary the location of sanitary sewers in close proximity to water mains. No variations on location will be permitted without approval of the Engineer.

1. Horizontal Separation - Sewers should be laid at least 10 feet horizontally from any existing or proposed water main. Should local conditions prevent a lateral separation of 10 feet, a sewer main may be laid closer to the 10 feet to a water main if (1) it is laid in a separate trench, or if (2) it is laid in the same trench with the water mains located at one side of the bench of undisturbed earth and if <u>in either case</u> the elevation of the crown of the sewer is at least 18 inches below the invert of the water main.

2. Vertical Separation - Whenever sewers must cross under water mains, the sewer shall be laid at such an elevation that the top of the sewer is at least 18 inches below the bottom of the water main. When the elevation of the sewer cannot be varied to meet the above requirement, the water main shall be relocated to provide this separation or reconstruct it with mechanical joint pipe for a distance of 10 feet on each side of the sewer. One full length of water main should be centered over the sewer so that joints will be as far from the sewer as possible.

   When it is impossible to obtain proper horizontal and vertical separation as stipulated above, both the water main and sewer shall be constructed of mechanical joint cast iron pipe or ductile iron pipe and shall be pressure tested to assure water tightness; or, the sewer shall be concrete encased for a distance of 10 feet on either side of the water main in accordance with the details shown on the contract drawings or as ordered by the Engineer.

G. Handling of Sewer Line Materials into Trench: Proper implements, tools and facilities satisfactory to the Engineer shall be provided and used by the Contractor for the safe and convenient prosecution of the work. All pipe, fittings, jointing materials, etc. shall be carefully lowered into the trench piece-by-piece by means of a derrick, ropes, or other suitable tools or equipment, in such a manner as to prevent damage to sewer line materials and/or workmen. Under no circumstances shall such materials be dropped or dumped into the trench.

H. Pipe Clearance in Rocks: Ledge rock, boulders and large stones shall be removed to provide a clearance of at least six inches below and on each side of all pipe and fittings.

   1. The specified minimum clearances are the minimum clear distances which will be permitted between any part of the pipe and/or fitting being laid and any part, projection or point of such rock, boulder or stone.

I. Culverts: Sanitary sewer shall be furnished and installed under culverts to the dimensions shown on the drawings.

J. Concrete Cradle and Encasement:

   1. Preparation: Prior to the formation of cradle or encasement, if any, temporary supports consisting of timber wedges and solid concrete bricks or cap blocks shall be used to support the pipe in place. Temporary supports shall have minimum dimensions and shall support the pipe at not more than two locations, one at the bottom of the barrel of the pipe adjacent to the shoulder of the socket and the other near the spigot end.

   2. Placing: After jointing of the pipe has been completed, concrete shall be uniformly poured beneath and on both sides of the pipe. Placement shall be done by the use of suitable equipment. The concrete shall be wet enough during placement to permit its flow, without excessive prodding, to all required points around the pipe surface. The width of cradle shall be such as to fill completely the trench width. In case of extremely wide trenches, concrete encasement may be confined above the top of the pipe to a narrower width but in no case shall it be less than the width of trench required for the size of pipe being used. Before depositing concrete, the space

within the limits of the pour shall have been cleared of all debris and water. Water shall not be allowed to rise adjacent to, or flow over, concrete deposited for less than 24 hours. Concrete shall be protected from the direct rays of the sun and kept moist, by a method acceptable to the Engineer, for a period of seven days or until backfilling is begun. In no case shall backfilling begin within 24 hours of the time of placing and the Engineer shall have strict control of the rate of backfilling.

3. Concrete: 3000 psi per requirements of Section 03300.

3.3 SERVICE CONNECTIONS

A. Fittings, (Wye branches, risers and bends) and service pipe shall be provided in strict accordance with these specifications and any and all practices and precautions required for the sewer main are equally applicable to the service connections from the sewer to one foot behind the curbline, right-of-way line, or edge of paved surface, or to a location designated by the Engineer. The Contractor shall place a 2" x 2" wooden marker at the end of each sewer lateral. The marker shall be one piece and may not be constructed from two or more smaller pieces. The marker shall extend from the lateral invert to 12" above grade.

B. Service connections are to be installed at a grade of quarter inch per foot from the main line to the termination of the lateral.

C. The Contractor shall submit to the Engineer, on a monthly basis, all as-built information which shall include: manhole run, station, length from centerline of sewer, invert elevation at the termination point of lateral and the address or property owner's name for whom the lateral and the address or property owner's name for whom the lateral is provided.

D. If rock is encountered during the installation of the lateral, the Contractor shall extend the lateral to the required distance as specified elsewhere in these specifications, and he shall provide a minimum "rock-free" distance of one foot beyond the end of the lateral. No lateral shall be "butted" against rock.

E. Plugs: Close free ends of branches and service connections with a carefully fitted plug. Type of plug used and method of installation shall meet Engineer's approval. Installed plugs shall successfully pass line acceptance tests.

F. Install warning tape as described in Section 02221.

3.4 PIPELINE TESTING PREPARATION

A. Backfill trenches in accordance with detail on Drawings.

B. Provide pressure pipeline with concrete reaction support blocking.

C. Flush pipeline to remove debris. Collect and dispose of flushing water and debris.

D. Clean pipelines by propelling a snug fitting rubber ball through the pipeline with water from the upstream manhole to the downstream manhole. Investigate and correct any stoppage of the cleaning ball. Collect and dispose of cleaning water and debris.

E. Lamping:

1. After flushing and cleaning, lamp gravity pipeline in the presence of the Engineer.

2. Assist the Engineer in the lamping operation by shining a light at one end of each pipeline section between manholes. The Engineer will observe the light at the other end. Pipeline that has not been installed with uniform line and grade will be rejected. Remove and re-lay rejected pipeline sections. Reclean and lamp until pipeline section achieves a uniform line and grade to the satisfaction of the Engineer.

F. Plug outlets, wye-branches and laterals. Brace plugs to offset thrust.

G. All testing for pipes and manholes shall be conducted with an Owner representative on site.

3.5 TESTING GRAVITY SEWER PIPELINES

A. Low Pressure Air Test:

1. Test each newly installed section of gravity sewer line between manholes.

2. Slowly introduce air pressure to approximately 5.0 psig.

3. Allow pressure to stabilize for at least five minutes. Adjust pressure to 3.5 psig or the increased test pressure as determined below if groundwater is present. Start the test.

4. Test:

a. Determine the test duration for a sewer section with a single pipe size from the table below:

Nominal Pipe Size	T (Time) Min/100 Ft.	
4	.3	3 minutes minimum
6	.7	3 minutes minimum
8	1.2	4 minutes minimum
10	1.5	4 minutes minimum
12	1.8	4 minutes minimum

b. Record the drop in pressure during the test period. If the air pressure has dropped more than 1.0 psig during the test period, the line is presumed to have failed. If the 1.0 psig air pressure drop has not occurred during the test period, the test shall be discontinued and the line will be accepted

c. If the line fails, determine the source of the air leakage, make corrections and retest. The Contractor has the option to test the section in incremental stages until the leaks are isolated. After the leaks are repaired, retest the entire section between manholes.

B. Infiltration Test:

1. Use only when gravity pipeline is submerged in groundwater. Obtain prior approval of the Engineer.

2. Maximum Allowable Infiltration: 100-gallons per inch of pipe diameter per mile per day for any one section under test, including the allowances for leakage from manholes.

C. Infiltration:

1. After the air testing described in the preceding paragraph has been completed by the Contractor, regardless of any indications of the test results made by the Engineer or the Owner, the Engineer and the Owner reserve the right to perform field investigations, prior to final written acceptance of each sewer run by the Owner and/or during the one-year correction period specified elsewhere in the Contract Documents, to establish the leakage of groundwater into the sewer and laterals constructed under this contract. The cost of these investigations shall be borne by the Owner.

2. Should the leakage exceed 100 gallons per day per inch diameter per mile of pipe for any section, the Contractor shall, at the direction of the Engineer or Owner, and at no cost to the Owner, perform any additional testing or corrective work required to reduce the infiltration in each manhole run from those lines installed by the Contractor to less than 100 gallons per day per inch diameter per mile of pipe. This leakage applies to each manhole run separately and should not be construed to mean total leakage in the total system. The scope of this corrective work shall include, but not be limited to, cleaning, televising and testing the sewer and laterals to the limits installed by the Contractor, to include testing and grouting of joints, excavation and replacement of faulty or damaged portions of the work, and all final restoration.

3.6 DEFLECTION TESTING OF PLASTIC SEWER PIPE

A. At the direction of the Engineer, perform vertical ring deflection testing on suspect portions of PVC sewer piping, in the presence of the Engineer, after backfilling has been in place for at least 30 days but not longer than 12 months.

B. The maximum allowable deflection for installed plastic sewer pipe shall be limited to 5% of the original vertical internal diameter.

C. Perform deflection testing with a deflectometer, calibrated television, or a properly sized "Go, No-Go" mandrel. The mandrel(s) shall be constructed at the Contractor's expense and subject to the approval of the Engineer.

D. Pipe exceeding the allowable deflection shall be located, excavated, replaced, and retested at the sole expense of the Contractor.

3.7 TEST REPORTS

A. The Contractor shall submit a written, certified report which includes the detailed testing log with times and results for all pipe segments and manholes.

3.8 ACCEPTANCE

A. Observation of successful testing of manholes, sewers or force mains by the Engineer does not constitute acceptance of the system or any portion thereof. Upon completion of any determined portion of a total system, and successful testing thereof, the Engineer may recommend final acceptance to the Owner. Only upon final inspection by the Owner or Engineer, and upon written acceptance for same will the system or portion thereof be considered substantially completed. Upon such acceptance, the one-year correction period as specified for the manholes, sewers or force main will commence.

1. If, during this final inspection, any irregularities are observed, the condition shall be corrected at the Contractor's expense prior to acceptance.

END OF SECTION 02731

SECTION 02732 - FORCE MAINS

PART 1 - GENERAL

1.1 SECTION INCLUDES

A. Force Main Pipe and Fittings.

B. Site Conditions.

C. Excavation, Bedding & Backfill.

D. Anchorage.

E. Tests.

F. Submittals.

G. Product Delivery, Storage and Handling.

1.2 RELATED SECTIONS

A. Trenching, Backfilling, and Compacting, Section 02221.

B. Cast-in-Place Concrete, Section 03300.

PART 2 - PRODUCTS

2.1 FORCE MAIN PIPE AND FITTINGS

All work shall be in accordance with UNI-B-3-92 "Recommended Practice for the Installation of Polyvinyl Chloride (PVC) Pressure Pipe.

A. Polyvinyl Chloride Pipe (PVC)

1. Polyvinyl Chloride (PVC) Pipe for force mains and pressure lines shall be of the bell and spigot type or the coupling type and shall be manufactured in accordance with ASTM D 2241.

2. The pipe shall be made of PVC compounds having a cell classification of 12454-B (or type 1, grade 1 or type 1120) or 12454-C (or type 1, grade 11, or type 1220) as defined in ASTM D 1784.

3. The joint shall be a rubber ring gasket meeting the requirements of ASTM D 1869, C 361 and C 443, and shall provide an adequate compressive force against the bell and spigot or the coupling to affect a positive seal and to provide for expansion and contraction while preventing displacement. The rubber ring gasket shall be the only element depended upon to make the joint flexible and watertight. Solvent cement joints are not acceptable.

4. PVC pipe shall be furnished in standard lengths of 18-22 feet. All pipe shall be marked clearly at intervals of five feet or less with the manufacturer's name, cell classification, SDR rating, and ASTM Designation D 2241.

5. Pipe shall meet the dimensional requirements of SDR 21 or Schedule 40 with a pressure rating of not less than 200 psi or approved equivalent.

6. Fittings for PVC pipe shall be compatible PVC fittings as recommended by the pipe manufacturers, and of same class as the pipe.

B. Ductile Iron Pipe:

1. ANSI A21.51, Ductile Iron Pipe, Thickness Class 51 for underground installation, Class 53 for Flanged piping.

2. Cement lining - double thickness cement mortar lining (1/8") with seal coat, in conformance with ANSI A21.4 and AWWA C104.

3. Exterior Coating:

   a. bituminous coating, minimum 1.0 mil thickness for underground piping.

   b. shop prime with primer compatible with finish coat for piping inside structures.

4. Joints:

   a. Use rubber gasket joints for pipe and fittings installed underground.

      1. Mechanical Joint: ANSI A21.11
      2. Push-on Joint: ANSI A21.11

   b. Use flanged joints for pipe and fittings installed inside of structures, unless indicated otherwise. Mechanical pipe couplings with self-centering gaskets designed to mechanically engage grooved or shouldered piping and lock in a positive watertight couple may be used in lieu of flanged joints, except where indicated otherwise.

      1. Flanged joint: ANSI A21.15
      2. Mechanical coupling: Victaulic Style 31 or equal.
      3. Gaskets: 1/16 inch thick, one piece cloth insertion rubber gaskets suitable for wastewater service.

C. Stainless Steel Pipe:

1. Type 304 stainless steel pipe

PART 3 - EXECUTION

3.1 SITE CONDITIONS

A. Environmental Requirements

1. Keep trenches dewatered until pipe joints have been made and concrete cradle or encasement, if any, have cured.

2. Under no circumstances lay pipe in water or on bedding containing frost.

3. Do not lay pipe when weather conditions are unsuitable, as determined by the Engineer, for pipe laying work.

3.2 EXCAVATION, BEDDING & BACKFILL

A. Non-metallic force mains to be installed with magnetic underground warning tape.

B. Where force main is benched into a sewer trench, the sewer backfill shall be installed to the elevation of the force main prior to the force main installation and backfill.

3.3 ANCHORAGE

A. Concrete Thrust Blocks: Provide concrete thrust blocks for all fittings, and at all locations where horizontal or vertical deflections are made in the joints of the piping.

1. Reaction Backing: Concrete of a mix not leaner than 1 cement: 2□ sand: 5 stone and having a compressive strength of not less than 2,000 psi, at 28 days. Place backing between solid ground and the fitting to be anchored; the area of bearing on the pipe and on the ground in each instance shall be as indicated on the Drawings or directed by the Engineer. Unless otherwise indicated or directed, place backing so that the pipe and fitting joints will be accessible for repair.

2. Metal Harness: Where indicated, use metal harness of tie rods of adequate strength to prevent movement. Steel rods or clamps shall be galvanized and painted with two coats of asphalt type paint.

B. Anchorage for Bends: Provide thrust restraint system for all bends deflected 11.25 degrees or more on mains six inches in diameter or greater.

1. Use only a thrust block system for PVC pipe.

2. Use metal rods only as indicated on the Drawings or directed by the Engineer.

3. Do not use split retainer flanges on PVC pipe to obtain a restrained joint.

3.4 TESTS

A. Pressure/Leakage Test of Force Mains. Upon completion of the installation and backfilling of each portion of the force main, a formal pressure leakage test will be required of the force mains, valves and fittings in the system constructed (no services 2" in diameter or less). Where any section of a main is provided with concrete thrust blocks, the test shall not be made until at least five (5) days have elapsed after the concrete was installed. If high-early-strength cement is used in the concrete thrust blocks, the test shall not be made until at least two (2) days have elapsed. Prior to the formal test, the main to be tested shall be thoroughly flushed. The force main shall then be tested as per Unibell Standard Test #UNB-3. See standard for leakage requirements.

B. The Engineer shall be furnished a written report of the results of the hydrostatic test that identifies the specified length of pipe testing, the pressures (minimum 1.5 times working pressure), the duration of the test, and the amount of leakage.

C. If any test of pipe laid discloses leakage greater than specified in Unibell UNB-3, the Contractor shall at his own expense locate and repair the defective pipe or joints until the leakage is within the specified allowance.

D. The Contractor shall furnish all labor, materials, tools and equipment necessary for or incidental to satisfactory testing, and shall be responsible for any damage to the pipe line or to adjoining property, due to this work.

3.5 SUBMITTALS

A. Shop Drawings and Product Data: Furnish completely dimensioned shop drawings, catalog cuts or other data as required, to provide a complete description of piping and piping specialties.

B. Certificates

1. Certified records or reports of results of shop tests, such records or reports to contain a sworn statement that shop tests have been made as specified.

2. Manufacturer's sworn certification that pipe will be manufactured in accordance with specified reference standards for each pipe type.

3.6 PRODUCT DELIVERY, STORAGE, AND HANDLING

A. Transport, handle and store pipe materials and other products specified herein in a manner recommended by the respective manufacturers to prevent damage and defects.

END OF SECTION 02732

SECTION 02733 – LOW PRESSURE SEWER PIPE (FORCE MAIN)

PART 1 - GENERAL

1.1 SECTION INCLUDES

A. Low Pressure Sewer Pipe and Fittings.

B. Site Conditions.

C. Excavation, Bedding & Backfill.

D. Anchorage.

E. Tests.

F. Submittals.

G. Product Delivery, Storage and Handling.

1.2 RELATED SECTIONS

A. Trenching, Backfilling, and Compacting, Section 02221.

B. Manholes, Section 2605

C. Cast-in-Place Concrete, Section 03300.

PART 2 - PRODUCTS

2.1 HIGH DENSITY POLYETHYLENE PIPE (HDPE)

A. The pipe and fittings shall be made of High Density, Extra High Molecular Weight (EHMW) polyethylene with a standard thermoplastic material designation code of PE3408 and having a cell classification of 345464E per ASTM D3350. The molecular weight category shall be extra high (250,000 to 1,500,000) as per the Gel Permeation Chromatography determination procedure with a typical value of 300,000 to 330,000. The pipe shall be manufactured in accordance with ASTM F714 and/or ASTM D3035.

B. The manufacturer shall provide certification that the stress regression testing has been performed on the specific product in accordance with ASTM D2837 "Standard Test Method for Obtaining Hydrostatic Design Basis for Thermoplastic Pipe Materials". The certification shall also state the specific resin used and its source.

C. HDPE pipe manufactured from materials meeting the specifications of this section shall have an Environmental Stress Crack Resistance of no failures in 10,000 hrs. (ESCR: F_O>10,000) when tested in accordance with ASTM F1248.

D. The pipe and fittings shall have product traceability. The manufacturer shall include a printline on the pipe. This shall notate the manufacturer's name, date of manufacture, the lot and supplier of raw material, plant location, and production shift. The ASTM standard shall also appear as ASTM F714 with the material designation as PE3408.

E. Both pipe and fittings shall carry the same pressure rating. All fittings shall be pressure rated to match the system piping to which they are joined. At the point of fusion, the outside diameter and minimum wall thickness of the fitting shall match the outside diameter and minimum wall thickness specifications of ASTM F714 for the same size pipe. Fittings shall be manufactured by the pipe manufacturers or be compatible fittings as recommended by the pipe manufacturers. Elbows, tees, and wyes shall be manufactured by mitered fabrication. All fittings shall be derated according to the manufacturer's written specifications, and clearly labeled on the fitting as such.

F. Force main and lateral HDPE pipe shall meet the dimensional requirements of SDR 11 and SDR 11.5 with a pressure rating of not less than 160 psi.

PART 3 - EXECUTION

3.1 INSTALLATION

A. Installation shall be in accordance with ANSI/ASTM F585, "Standard Practice for Insertion of Flexible Polyethylene Pipe into Existing Sewers."

B. The system shall be complete, including special equipment for transport and fusion joining of HDPE pipe. The Contractor shall be familiar with the procedures of installation and joining of pipe sections.

C. Pipe shall be installed in such a way as to not create tension or compression forces in the pipe. Concrete encasement thrust blocking shall be placed at curvatures greater than forty-five degrees, or where pipe movement is likely to occur, at the direction of the Engineer.

3.2 SITE CONDITIONS

A. Environmental Requirements

1. Keep trenches dewatered until pipe joints have been made and concrete cradle or encasement, if any, have cured.
2. Under no circumstances lay pipe in water or on bedding containing frost.
3. Do not lay pipe when weather conditions are unsuitable, as determined by the Engineer, for pipe laying work.

3.3 EXCAVATION, BEDDING & BACKFILL

A. Non-metallic force mains to be installed with magnetic underground warning tape.

B. Where force main is benched into a sewer trench, the sewer backfill shall be installed to the elevation of the force main prior to the force main installation and backfill.

3.4 JOINING

A. Heat Fusion Joining Systems: Pipe and fittings shall be thermal butt fusion, saddle fusion, or socket fusion according to manufacturer recommended procedures.

B. The manufacturer shall provide fusion training. The Contactor (actual installers) and the onsite joint inspector shall be trained by the manufacturer or manufacturer's authorized representative.

C. It will not be permitted to join unlike SDR's to one another. Transition from unlike SDR's shall be accomplished by mechanical couplings capable of identical pressure ratings or machined polyethylene nipples where a thicker wall polyethylene has been matched to the companion pipe wall.

D. Mechanical Joining Systems: HDPE pipe and fittings shall be connected by means of a polyethylene flange adapter and backup ring. The polyethylene flange adapter will be of the same specifications as the LightView except will be made from black plate stock. This method is also approved to join to another piping system or valves. Mechanical compression couplings or full circle encasement clamps may be used depending on the test specification.

E. Mechanical couplings shall be installed in accordance with the mechanical coupling manufacturer's recommended procedures.

F. Equipment: The fusion equipment and operator shall be required to demonstrate successful field experience.

3.5 TESTS

A. Pressure/Leakage Test of Force Mains. Upon completion of the installation and backfilling of each portion of the force main, a formal pressure leakage test will be required of the force mains, valves and fittings in the system constructed. Where any section of a main is provided with concrete thrust blocks, the test shall not be made until at least five (5) days have elapsed after the concrete was installed. If high-early-strength cement is used in the concrete thrust blocks, the test shall not be made until at least two (2) days have elapsed. Prior to the formal test, the main to be tested shall be thoroughly flushed. The force main shall then be tested as per Unibell Standard Test #UNB-3. See standard for leakage requirements.

B. The Engineer shall be furnished a written report of the results of the hydrostatic test that identifies the specified length of pipe testing, the pressures (minimum 1.5 times working pressure), the duration of the test, and the amount of leakage.

C. If any test of pipe laid discloses leakage greater than specified in Unibell UNB-3, the Contractor shall at his own expense locate and repair the defective pipe or joints until the leakage is within the specified allowance.

D. The Contractor shall furnish all labor, materials, tools and equipment necessary for or incidental to satisfactory testing, and shall be responsible for any damage to the pipe line or to adjoining property, due to this work.

3.6 WARRANTY

A. The manufacturer shall provide evidence that their standard Terms and Conditions of Sales for warranty and guarantee have been one year from date of manufacture for a period of at least five years. It will not be permitted for a manufacturer to waive the date for the period of warranty and guarantee for this project to meet this specification. The one year date of manufacture shall be covered under the standard Terms and Conditions of Sale.

3.7 SUBMITTALS

A. Shop Drawings and Product Data: Furnish completely dimensioned shop drawings, catalog cuts or other data as required, to provide a complete description of piping and piping specialties.

B. Certificates

1. Certified records or reports of results of shop tests, such records or reports to contain a sworn statement that shop tests have been made as specified.
2. Manufacturer's sworn certification that pipe will be manufactured in accordance with specified reference standards for each pipe type.

3.8 PRODUCT DELIVERY, STORAGE, AND HANDLING

A. Transport, handle and store pipe materials and other products specified herein in a manner recommended by the respective manufacturers to prevent damage and defects.

END OF SECTION 02732

SECTION 02966 – VALVE BOXES

PART 1 - GENERAL

1.1 DESCRIPTION

A. Refer to details.

PART 2 - PRODUCTS

2.1 MATERIALS

A. Type 1: Roadway Style – 5-1/4" inside diameter, cast iron, asphaltic coated 3-piece adjustable valve box, round head, with the word "**SEWER**" printed on top.

1. Manufacturers: Bringham & Taylor, Mueller or Tyler.

B. Type 2: Curb Stop Box: 1" inside diameter upper section, asphaltic coated 2-piece cast iron with operating rod and lid with brass head plug.

1. Manufacturer: Ford Model EA2-40-40-24R or Mueller.

C. Adjustable Pipe Supports: Provide Standon S92 saddle support for 2- and 3-inch pipes and C92 saddle clamp support for 2-inch pipe with ASTM A36 saddle strap, threaded stud, base plate and ASTM A53 collar/base cups with MIG welding and a corrosion resistant galvanized finish.

PART 3 - EXECUTION

3.1 INSTALLATION

A. Install Type 1 valve boxes at every distribution valve, blow-off valve, and hydrant isolation valve.

B. Provide valve box length as required to accommodate valve depth.

C. Provide Type 2 valve boxes with extended rods for curb stops.

D. Support valve boxes in accordance with details.

E. Valve boxes shall be flush with the finish grade.

F. Locate curb stop valve box in concrete sidewalk. If area does not specify for the installation of sidewalk, provide 4" thick concrete pad a minimum of 12" square as noted on the standard details.

END OF SECTION 02966

SECTION 02967 – VALVES AND FLUSHING CONNECTION

PART 1 - GENERAL

1.1 DESCRIPTION

A. The Contractor shall provide the equipment and materials listed herein as part of Contract.

1.2 SUBMITTALS

A. Shop drawings and product data.

1.3 RELATED SECTIONS

A. Precast Concrete Structure, Section 02605.

B. Valve Boxes, Section 02966.

PART 2 - PRODUCTS

2.1 MATERIALS

A. Sewage Combination Air Valve: Provide APCO Model 443WA.1 (2-inch inlet and 1-inch outlet) air release valve where shown on the drawings. Valves shall be provided with shutoff valve, blowoff valve, flush valve and minimum 5-feet rubber hose with quick disconnect coupling for back flushing.

B. Ball Valve: Provide Nordstrom poly-water HDPE valves for flushing connections as shown on the Drawings. Valves shall be of drop-light shutoff, multiple elastomeric steam seals, smooth full bore, EPDM seat, flanged ends, and 200 psi rated pressure.

C. Adjustable Pipe Supports: Provide Standon S92 saddle support for 2- and 3-inch pipes and C92 saddle clamp support for 2-inch pipe with ASTM A36 saddle strap, threaded stud, base plate and ASTM A53 collar/base cups with MIG welding and a corrosion resistant galvanized finish.

D. Flushing Hydrants: Provide 2" Flushing hydrants for the intermediate and terminal cleanout assemblies. The 2" flushing hydrants are to be hidden underground within a heavy duty precast concrete junction box with cover. Provide a 2-1/2" brass NSFT discharge with cap and chain on top of the pipe riser and is exposed within the junction well box. Also exposed in the well is the top of the valve stem for the integral bronze body ball valve with automatic weep that allow for the hydrant barrel to drain. Basis of design is Gil Industries or an approved equal. Utilize two (2) 45° elbows in lieu of a 90° elbow. Refer to the drawings for more information.

PART 3 - EXECUTION

3.1 EQUIPMENT

A. Equipment described in this Section to be installed at the location shown on the drawings, as applicable. Where equipment is not shown, or where equipment is a portable item, deliver to Owner prior to completion of Contract.

END OF SECTION 02967

SECTION 03300 - CAST-IN-PLACE CONCRETE

PART 1 - GENERAL

1.1 SECTION INCLUDES

A. Concrete materials and mixes for the following:

1. Concrete Cradle and/or Encasement.
2. Reaction Backing (Thrust Blocks).
3. Manhole Base Channel Fill.
4. Manhole Bases.
5. Anti-Flotation Rings.
6. Concrete Footings, Equipment Foundations, Slabs on Grade.

1.2 REFERENCES

A. American Association of State Highway and Transportation Officials, AASHTO M182 Burlap cloth made from Jute or Kenaf.

B. American Concrete Institute:

1. ACI 301 - Specifications for Structural Concrete for Buildings.
2. ACI 304 - Recommended Practice for Measuring, Mixing, Transporting and Placing Concrete.
3. ACI 305R - Hot Weather Concreting.
4. ACI 306R - Cold Weather Concreting.
5. ACI 308 - Standard Practice for Curing Concrete.
6. ACI 309 - Standard Practice for Consolidation of Concrete.
7. ACI 318 - Building Code Requirements for Reinforced Concrete.

C. American Society for Testing and Materials:

1. ASTM C33 - Concrete Aggregates.
2. ASTM C39 - Compressive Strength of Cylindrical Concrete Specimens.
3. ASTM C94 - Ready Mixed Concrete.
4. ASTM C143 - Slump of Portland Cement Concrete.
5. ASTM C150 - Portland Cement.
6. ASTM C171 - Sheet Materials for Curing Concrete.
7. ASTM C171 - Sampling Freshly Mixed Concrete.
8. ASTM C173 - Air Content of Freshly Mixed Concrete by the Volumetric Method.
9. ASTM C231 - Air Content of Freshly Mixed Concrete by the Pressure Method.
10. ASTM C260 - Air Entraining Admixtures for Concrete.
11. ASTM C309 - Liquid Membrane - Forming Compounds for Curing Concrete.
12. ASTM C494 - Chemical Admixtures for Concrete.

PART 2 - PRODUCTS

2.1 MATERIALS

A. Portland Cement: ASTM C150 of the following type:

1. For concrete which will be in contact with sewage: Type II, Moderate Sulfate Resistance.
2. For all other uses: Type I, Normal.

B. Aggregates: Meeting requirements of ASTM C33.

C. Water: Potable quality, clean and free of injurious amounts of oil, acid, alkali, organic matter, suspended matter, and other deleterious substances.

D. Concrete Admixtures:

1. Air-Entraining Admixture: Use a product conforming to ASTM C260, certified by manufacturer to be compatible with other required admixtures.
2. Water-Reducing Admixture: ASTM C494, Type A, and containing not more than 0.1 percent chloride ions.
3. High-Range Water-Reducing Admixture (Super Plasticizer): ASTM C494, Type F or Type G and containing not more than 0.1 percent chloride ions.
4. Water-Reducing, Non-Chloride Accelerator Admixture: ASTM C494, Type E, and containing not more than 0.1 percent chloride ions.
5. Water-Reducing, Retarding Admixture: ASTM C494, Type D, and containing not more than 0.1 percent chloride ions.
6. Prohibited Admixtures: Calcium chloride thyocyanates or admixtures containing more than 0.1 percent chloride ions are not permitted.

E. Moisture-Retaining Cover: One of the following, complying with ASTM C171.

1. Waterproof paper.
2. Polyethylene film.
3. Polyethylene-coated burlap.

F. Liquid Membrane-Forming Curing Compound: Liquid type membrane-forming curing compound complying with ASTM C309, type I, Class A. Moisture loss not more than 0.055 gr/sq cm when applied at 200 sq ft/gal.

1. Acceptable Manufacturers:

a. Masterseal; Master Builders.
b. L&M Cure; L&M Construction Chemicals.
c. Substitutions: Under provisions of Section 01600.

2.2 PROPORTIONING AND DESIGN OF MIXES

A. Prepare design mixes for each type and strength of concrete by either laboratory trial batch or field experience methods as specified in ACI 301.

B. Compressive Strength:

1. Provide concrete with 28 day compressive strength as specified in other Specification Sections.
2. Where no compressive strength is specified, use 3,000 psi concrete.

C. Admixtures:

1. Use water-reducing admixture or high range water-reducing admixture (super plasticizer) in concrete as required for placement and workability.
2. Use non-chloride accelerating admixture in concrete slabs placed at ambient temperatures below 50°F.
3. Use high-range water-reducing admixture in pumped concrete, concrete required to be watertight, and concrete with water/cement ratios below 0.50.
4. Use air-entraining admixture in exterior exposed concrete, unless otherwise indicated. Add air-entraining admixture at manufacturer's prescribed rate to result in concrete at point of placement having total air content with a tolerance of plus-or-minus 1-1/2 percent within following limits:

a. Concrete exposed to freezing and thawing, deicer chemicals, or subjected to hydraulic pressure:

Maximum Aggregate Size (inches)	Air Content (% by Volume)
1/2	5-9
3/4	4-8
1	3.5-6.5
1-1/2	3-6
2	2.5-5.5
3	1.5-4.5

D. Water-Cement Ratio: Provide concrete for following conditions with maximum water-cement (W.C.) ratios as follows:

1. Concrete with 28 day compressive strength required to be 3,000 or higher: 0.58 maximum (non air-entrained), 0.40 maximum (air-entrained).

E. Slump Limits: Proportion and design mixes to result in concrete slump at point of placement as follows:

1. Slump: Not less than 1" nor more than 4", except when super plasticizer is used, slump may be as high as eight inches.

2.3 CONCRETE MIXES

A. Job-Site Mixing: Not Allowed.

B. Ready-Mix Concrete: Comply with requirements of ASTM C94, and as herein specified.

1. During hot weather, or under conditions contributing to rapid setting of concrete, a shorter mixing time than specified in ASTM C94 may be required.
2. When air temperature is between 85°F and 90°F, reduce mixing and delivery time from 1-1/2 hours to 75 minutes, and when air temperature is above 90°F, reduce mixing and delivery time to 60 minutes.

PART 3 - EXECUTION

3.1 CONCRETE PLACEMENT

A. General: comply with ACI 304 "Recommended Practice for Measuring, Mixing, Transporting, and Placing Concrete", and as herein specified.

B. Cold Weather Placing: Protect concrete work from physical damage or reduced strength which could be caused by frost, freezing actions, or low temperatures, in compliance with ACI 306.

C. Hot Weather Placing: When hot weather conditions exist that would seriously impair quality and strength of concrete, place concrete in compliance with ACI 305.

3.2 CONCRETE CURING AND PROTECTION

A. General: Protect freshly placed concrete from premature drying and excessive cold or hot temperatures.

1. Start initial curing as soon as free water has disappeared from concrete surface after placing and finishing. Weather permitting, keep continuously moist for not less than seven days.
2. Begin final curing procedures immediately following initial curing and before concrete has dried. Continue final curing for at least seven days in accordance with ACI 301 procedures. Avoid rapid drying at end of final curing period.

B. Curing Methods: Perform curing of concrete by curing and sealing compound, by moist curing, by moisture-retaining cover curing, and by combinations thereof, in accordance with ACI 308.

3.3 FINISHES

A. Provide a steel troweled floor finish on the floors of the generator stations.

3.4 QUALITY CONTROL

A. Sampling and testing for quality control during placement of concrete may include the following, as directed by Engineer.

1. Sampling Fresh Concrete: ASTM C172, except modified for slump to comply with ASTM C94.
2. Slump: ASTM C143; one test at point of discharge for each day's pour of each type of concrete; additional tests when concrete consistency seems to have changed.
3. Air Content: ASTM C173, volumetric method; ASTM C231 pressure method; one for each day's pour of each type of air-entrained concrete.
4. Concrete Temperature; Test hourly when air temperature is 40° F and below, and when 80°F and above; and each time a set of compression test specimens made.
5. Compressive Strength Tests: ASTM C39; one set for each day's pour exceeding 5 cubic yards plus additional sets for each 50 cubic yards over and above the first 25 cubic yards of each concrete class placed in any one day; one specimen tested at seven days, two specimens tested at 28 days, and one specimen retained in reserve for later testing if required. The average compressive strength for the two 28 day specimens will be used to determine compliance with the compressive strength requirements.

END OF SECTION 03300

SECTION 11100 - SEWAGE PUMPING STATIONS

PART 1 - GENERAL

1.1 EXTENT OF WORK

A. The work included in this project consists of furnishing all new materials, equipment, supplies, labor, transportation, fuel, and power, performing all work as required by the Contract, in strict accordance with the Specifications, Schedules, and Drawings, all of which are made a part hereof, and including such Detail Drawings as may be furnished by the Engineer from time to time during construction in interpretation of said Drawings.

B. The Contractor is responsible for furnishing and installing the following:

1. Clearing and grubbing of the site, including soil erosion and sedimentation control measures.

2. Excavations for the pumping station, valve chamber, yard piping, and appurtenances.

3. Concrete wet well and valve chamber.

4. Pump, pump motor, pump controls and motor starter and described in this Section.

5. Sewage Grinder, rail assemblies and controls.

6. Backfilling, paving, fencing, and site restoration described elsewhere in these Specifications.

1.2 QUALITY ASSURANCE

A. Workmanship and Guarantee

1. The manufacturer of the Pumping station shall have a minimum of five years' experience in the design and manufacture of submersible pumping stations and shall guarantee the structure and all equipment to be free from defects in materials and workmanship for a period of up to one year from date of start-up.

2. Warranties and guarantees by the suppliers of various components in lieu of a single-source responsibility by the manufacturer will not be accepted. The manufacturer shall be solely responsible for the guarantee of the station and all components, with the exception of the flow metering and remote monitoring system. These shall be warranted by their respective manufacturers.

3. In the event a component fails to perform as specified or is proven defective in service during the guarantee period, the manufacturer shall provide a replacement part without cost to the Owner. He shall further provide, without cost, such labor as may be required to replace, repair, or modify major components such as the pumps, pump motors, and sewage piping manifold.

B. General

1. In addition to the submittals listed below and unless otherwise directed, the Contractor shall provide, prior to purchase, catalog cuts and manufacturer's data for all items to be purchased or installed, for review and approval by the Engineer, as provided in the General Conditions.

2. The Contractor shall furnish for submission with each unit or set of identical mechanical units copies of printed instruction books. These books shall include operation, maintenance and repair information, location and telephone number where spare parts may be ordered, plus a parts list. The parts list shall indicate the various parts by their name, number, and diagram.

3. Manufacturer's data on pumps shall include pump characteristic curves showing head, capacity, efficiency, and brake horsepower.

C. Factory Tests

1. All components of the Pumping station shall be given an operational test of all equipment at the factory to check for excessive vibration, for leaks in all piping or seals, for correct operation of the control systems and all auxiliary equipment. Pumps shall take suction in a manner to simulate actual service conditions. The control panel shall undergo a full operational test with all systems operating.

2. Each pump shall be factory tested by the manufacturer for capacity, power requirements, and efficiency at the specified minimum operating head, rated heat, shut-off head, and at three points as necessary to provide a certified pump performance curves. Certified curves will be provided for each serial number pump being supplied to the project and be performed to Hydraulic Institute test level A standards for engineer's review prior to shipment.

D. Test Certificates

1. Submit test certificates for each consignment or shipment to indicate all materials and equipment required by the Specifications are satisfactorily tested by the manufacturer and found to comply with specified requirements.

E. Shop Drawings

1. The Contractor shall submit shop drawings, details and descriptive literature showing pipe, joints, fittings, and connection details, equipment, materials, procedures for fabrication and erection, adapters, appurtenances, procedures for earthwork,

shoring, bracing, procedure of dewatering, methods of installation and testing, and other relevant details of the complete installation.

1.3 PRODUCT STORAGE AND HANDLING

A. General

1. The Contractor shall at all times take necessary steps to protect and preserve all materials, supplies, equipment and all work which has been performed.

2. Towards this end, the Contractor shall provide for storage facilities at the work site.

3. Should work be suspended temporarily because of inclement weather or other causes, the Contractor shall take such steps as are necessary to protect materials, supplies, equipment and work performed against damage and injury. Any damaged materials, supplies, equipment, or work performed shall be removed and replaced at the expense of the Contractor.

B. Storage and Handling

1. In all cases, equipment and materials shall be stored per manufacturer instructions so that equipment and materials shall remain undamaged and in suitable condition for installation. Damaged equipment and materials shall be replaced at the expense of the Contractor.

2. All materials shall be so handled that the coating and/or linings shall not be damaged. If any part of the coating or lining is damaged, it shall be repaired or replaced by the Contractor at no cost to the Owner.

PART 2 - PRODUCTS

2.1 DESCRIPTION OF EQUIPMENT

A. The Contractor shall furnish and install complete a pumping station as described in these Contract Documents within a concrete wet well and valve chamber. Each pump shall be capable of handling raw, unscreened domestic sewage consisting of water, fibrous materials, and 3"inch diameter spherical solids. The pump (s) shall be capable of handling liquids with temperatures to 104 degrees F continuous, 160 degrees F intermittent, and shall be capable of running dry for extended periods.

B. These Specifications and Drawings describe equipment.

C. The station will be provided with a portable hoist rated to lift the pumps within the station, and remove them from the wet well.

2.2 OPERATING CONDITIONS

A. Furnish and install a minimum of two submersible non clog pumps to meet specified operating conditions. The pump(s) shall be manufactured by a company regularly engaged in the manufacture and assembly of similar units for a minimum of five (5) years.

B. Basis of Design: Flygt, UL Listed, Explosion proof.

2.3 SEWAGE PUMP AND MOTOR

A. Construction:

1. The volute, seal plates, impeller and motor housing shall be constructed of high quality ASTM A-48 class 30 cast iron. Pump (s) shall be painted with a water based air dry enamel of 2.0 mil minimum thickness. All exposed hardware shall be 300 series stainless steel. The pump construction shall contain no points of critical clearance nor require periodic adjustment or replacement to maintain operating efficiency. Discharge connection shall be a standard 125 pound 4" inch flange. All gaskets shall be of the compression square ring type eliminating critical slip fits and the possibility of damage during service associated with sliding o-ring sealing arrangements.

   The impeller shall be of the non-clog design with pump out vanes on the back side. The impeller shall be dynamically balanced to ISO G6.3 specifications.

   The double mechanical shaft seal shall be of the single spring design operating in an oil-filled seal cavity. Pump-out vanes in the back of the impeller shroud shall develop a radially increasing pressure differential from the impeller hub outward. This pressure differential shall be transmitted by means of a Buna-N elastomer diaphragm to the oil in the seal cavity, thus producing a higher pressure inside the seal cavity than immediately adjacent to the seal face in the pump case forcing the oil in the seal cavity to be the seal face lubricant. The materials of construction shall be silicon carbide for the rotating faces and silicon carbide for the stationary faces, lapped and polished to a tolerance of one light band, 300 series stainless steel hardware, and all elastomer parts to be of Buna-N. The seal shall be commercially available and not a manufacturer's proprietary design. A moisture sensor detection system consisting of two probes utilized as a positive/negative pole shall be integrated within the oil-filled seal chamber. Units utilizing one probe and grounding through the pump case or a float device are not acceptable.

B. Electric Motor:

1. The motor shall be designed to be non- overloading throughout the entire intended hydraulic operating range from shut off to static head. The pump and motor shall be UL Listed with Underwriters Laboratories as Class I, Groups C & D, Division I, explosion proof, for installation in water and sewage. All electrical parts shall be housed in an air filled, cast iron, watertight enclosure. The enclosure shall be sealed by the use of o-rings and shall have rabbit joints with a large overlap. The motor shaft extension and all external hardware shall be stainless steel. The motor windings shall have class F insulation system minimum and a 1.15 service factor. The shaft seals shall be a tandem design and operate in an oil filled enclosure. The shaft sealing system shall run in an oil bath. The lower, primary seal shall consist of one stationary silicone carbide ring and one positively driven (rotating) silicon carbide ring; while the upper seal between the motor and the oil housing shall consist of one stationary stainless steel ring and one positively driven rotating carbon ring. Each interface shall be held in place by its own independent spring system. The seal shall be commercially available and not a manufacturer's proprietary design.

   Thermal sensors shall be used to monitor stator temperatures. The stator shall be equipped with a thermal switch embedded in the end coil of the stator winding. This shall be used in conjunction with and supplemental to external motor overload protection and wired to the control panel.

   The pump shall be equipped with 25 ft. of type 6/4 SOW-A power cable and 25 ft. of sensor cable type 18/5 SOW. The cable entry design shall be such that it precludes specific torque requirements to insure a watertight and submersible seal. All incoming lead wires shall be spliced in the motor terminal housing. After splicing, the terminal housing shall be filled with epoxy to seal the outer cable jacket and the individual strands to prevent water from entering the motor housing. A secondary rubber pressure grommet shall be provided as an additional sealing point and strain relief at the point of cable entry. Cable entry designs utilizing terminal boards to connect power cord leads with motor leads shall not be acceptable. The pump cord(s) shall be equipped with a properly sized meltric fitting to connect to pump disconnect box.

2.4 PUMP DISCONNECT PANEL AND STAND

A. A NEMA 4X stainless steel junction box shall be provided and mounted on the top slab of the system. The enclosure shall be lockable single door and carry an IP rating of 66 minimum. The disconnect panel shall be mounted on a stainless steel pedestal with stainless steel mesh that provides atmospheric separation per NEC requirements. The wires shall be surrounded by stainless steel wire mesh of which one side can be removed to access the wiring. Meltric fitting sized for pump amperage shall be installed for quick removal and replacement of pump units. The precast concrete slab shall include an aluminum cable trough with bolt down cover to allow pump control wires to reach into disconnect box without any splicing.

2.5 MELTRIC SWITCH RATED PLUGS AND RECEPTACLES

A. Meltric DSN Decontactor Series switch rated plugs and receptacles should be used for connecting the pump power cords into the bottom of the junction box. Hazardous location models suitable for Class 1, Division 2, Group D location shall be provided. The plugs and receptacles shall include the following features.

1. Features:

   a. Spring-Loaded Butt Contacts – Butt style contacts ensure a very positive and consistent connection. The spring loading of these contacts, which is accomplished with coil springs, provides a desirably high contact force that remains constant over thousands of operations. In addition, it should automatically compensate for any wear and/or deviations in contact length resulting from manufacturing tolerances.
   b. Silver-Nickel Contact Material – Solid silver-nickel (85%/15%) contacts should be used. Brass contacts will not be considered acceptable. The silver-nickel combination is used for the excellent electrical and mechanical properties.
   c. Dead Front Construction – When used in submersible pump applications the dead front construction should be used to enhance safety by eliminating unintended access to live parts. Dead front should be able to be opened only by an appropriate mating plug.
   d. Enclosed Arc Chambers – The contacts should make and break within enclosed arc chambers. By containing arcing in the chamber, safety is greatly enhanced.
   e. Push Button Load Breaking – To disconnect the switch the user needs to depress the pawl, which will cause the circuit to be disconnected and the plug to be ejected to its off position.
   f. Automatic Watertightness – The DSN contactor shall have a NEMA 4X rating, while the DS and DB models shall have a NEMA 3R rating.
   g. Spring Assisted Terminals – A spring ring shall surround the conductor terminal, which applies constant pressure as the terminal screw is tightened.
   h. Stainless Steel Springs & Screws – All hardware shall be made of stainless steel.
   i. The DS, DSN, and DB product lines shall be UL, CSA, and IEC switch rated plugs and receptacles.
   j. Optional Auxiliary Contacts – Integral pilot contacts shall be an option. These pilot contacts shall be able to control auxiliary equipment, monitor parameters, or communicate alarms through the same plug as the power supply.

B. Pump Retrieval Chain Sling for Each Pump - Stainless steel chain attaches to pump lifting handle and smarty lift grasps chain for pump lifting and installation.

2.6 CORD STRAIN RELIEF

A. Each pump cord shall be fitted with a stainless steel Kellems cord grip to help support the weight of the pump power and control cables. Kellems support grips are used to hold the weight of electrical cable as it hangs in a vertical, sloping or horizontal position. Electrical cable must be supported, or its dead weight can cause excessive strain or pullout at the connections resulting in pump failure.

2.7 WET WELL

A. The wet well shall be 7'-0" I.D. at the depth indicated on the drawings with a monolithically poured base and riser section. The unit shall have 8" thick walls and a 9'- 6" diameter flotation collar and precast hopper bottom, 4,000 PSI reinforced concrete conforming to ASTM specific C-478. All joints shall be sealed with Ram-Nec sealant. The top cover slab shall be a minimum of 8" thick concrete with a U.S.F. Fabrication lockable aluminum cover inserted to size written in the specifications below. The junction box shall be mounted to a stainless steel frame, and the wires shall be surrounded by stainless steel wire mesh of which one side can be removed to access the wiring. The entire structure shall be mounted to the concrete wet well slab to allow maintenance personnel to disconnect wiring without entering or reaching into the wet well.

B. Piping in the station shall be 4" cement lined ductile iron with threaded flanges. No "uni-flanges", slip on flanges, or flexible couplings will be allowed in the pumping station. The station shall also be equipped with an inlet gasket, 2.00" stainless steel guide rails, and a stainless steel level control switch-mounting bracket with a compression grommet that allows for level setting adjustment. A galvanized vent with bird screen of size shown shall be mounted through the top slab of the wet well. The vent shall have a confined space warning sign attached with stainless steel U-bolts.

C. The station shall also be equipped with an inlet gasket(s) as per the station drawing, stainless steel guide rails, pump and control and a level control switch mounting bracket for floats and transducer and a cable rack to hang pump cords with stainless steel Kellems cord support grips.

D. A white epoxy coating shall be applied to the entire interior concrete surface of the wet well. The coating shall consist of two (2) coats, each six (6) mils thick, applied as recommended by the manufacturer under controlled conditions at concrete manufacturer's plant.

1. Manufacturer: Penn-Chem Coating #54-W-23 by MAB Coatings or approved equal.

E. Bitumastic coating shall be applied to the below grade exterior concrete surface of the wet well.

F. Pipe Gaskets:

1. All pipe penetrations in the manhole shall be sealed watertight using flexible rubber gaskets conforming to ASTM C923 specifications. The use of caulking or epoxy type liner systems at the pipe penetrations shall not be acceptable.

a. Manufacturer: Kor-N-Seal as manufactured by NPC, or equal.

2.8 VALVES

A. Air Cushioned Swing Check Valve:

1. Horizontal swing check valves, sized as shown on the plans shall be installed in the discharge piping. The swing check valve shall be constructed with heavy cast iron or cast steel body with a bronze or stainless steel seat ring, a non-corrosive shaft for attachment of weight and lever, and complete non-corrosive trim cushion chamber. It shall absolutely prevent the return of water, oil or gas back through the valve when the inlet pressure decreases below the deliver pressure. The valve must be tight seating, and must be cushioned in operation. The seat ring must be renewable. The cushion chamber shall be attached to the side of the valve body externally and so constructed with a piston operating in a chamber that will effectively permit the valve to be operated without any hammering action. The cushion chamber shall be arranged that the closing will be adjustable to meet the service requirements. The valve disc shall be convex and of cast iron or cast steel and shall be suspended from a non-corrosive shaft which will pass through a stuffing box and be connected to the cushion chamber on the outside of the valve. All material and workmanship shall be first class throughout and the purchaser reserves the right to inspect this valve before shipment. The valve shall be the GA Industries, Inc. Fig. No. 250-D, or APCO Series 6004 or approved equal.

B. Resilient Seat Gate Valves:

1. Resilient Seat Gate Valves 12 Inches and Under for Buried Service Installation: Resilient wedge, iron body, bronze trim, resilient seat for zero leakage, mechanical joint ends, non-rising stem, 0-Ring packing, 2-inch operating nut, epoxy coating inside and outside applied before valve assembly. Valves shall meet or exceed AWWA Standard C504, C509 and C550 (current edition). Valves shall be rated for 200 psi minimum with no leakage. Valves shall be line size in accordance with the diameters shown on the drawings. Manufacturer: Mueller A-2360, US Metroseal or equal.

C. Valve Chamber:

1. Provide a separate concrete valve chamber for discharge, gate valves and swing check valves. Valve chambers shall be constructed of concrete as specified for pump station with 6" walls and 10" bottom, white epoxy coating interior, bitumastic coating exterior (below grade only). The top cover slab shall be concrete with a U.S.F. Fabrication lockable aluminum cover inserted to size written in the specifications below. Piping shall be sealed with boot gaskets and waterstops where it penetrates the wall. Aluminum ladder with safety extension shall be provided in the chamber. The valve chamber floor shall be sloped toward the drain line to provide sufficient drainage. A 2 " PVC drain line sloped at 3% with flap valve or Tide Flex valve shall be installed from valve chamber to wet well. The valve chamber shall incorporate precast concrete piers with stainless steel straps or "Standon" pipe supports to support and stabilize piping.

D. Piping and Valves:

1. The station sewage piping shall be class 53 ductile iron pipe that will extend down through the common base plate terminating in plain ends exterior to the pump chamber. Steel or PVC pipe will not be accepted as an "or equal" substitute to the ductile iron pipe specified. The pipes shall be sealed where they penetrate the concrete with link seal or a gasket to form a gas tight seal between the pump valve chamber and wet well. Each discharge line shall be fitted with a gate valve and check valve as specified herein and sized as shown on the plans. All piping shall be field coated with two coats of gray epoxy to a DFT of 10 – 12 mils.

2.9 PRESSURE GAUGES

A. Provide a filled sleeve pressure sensor assembly on each of the pump discharge lines. Provide ample space for gauge assembly, valve operation and process sampling. Each pressure gauge shall be an all welded assembly. The diaphragm shall be recessed within the all-welded body, and the pressure gauge is back-welded to the seal upper housing to eliminate another potential leak path. No threaded seal fill port should be included to ensure tamper resistant design.

1. Suitable Pressure Ranges: 0 psi to 100 psi
2. Operating Temperature: 0°F to 200°F
3. Ambient Temperature: -40°F to 150°F
4. Dial Size: 2 1/2" process gauge
5. Process Connection: 1/4" NPT female
6. Process materials: Carbon steel body; Class 150 flanges; Neoprene sleeve; ethylene glycol and water fill fluid
7. Manufacturer: Red Valve Series 40

2.10 WET WELL HATCH

A. The hatch shall have a clear opening as indicated on the Drawings. Door leaf shall be 1/4 inch thick aluminum diamond plate reinforced for a 300 p.s.f. live load. The frame shall be extruded aluminum channel section with an integral anchor flange on all four (4) sides. The frame shall include an EPDM odor reduction gasket that reduces the amount of odor that escapes from below the door and a 1-1/2 inch threaded drain coupling. The floor access door shall be equipped with a flush drop handle that does not protrude above the cover, and a stainless steel hold open arm with red vinyl grip that automatically locks the cover in the 90 degree open position. The door shall have stainless steel hinges and stainless steel tamper resistant bolts/locknuts. A staple for a padlock shall be supplied for security. All stainless steel components shall be type 316 alloy. An adhesive backed vinyl material that protects the product during shipping and installation shall cover the entire top of the frame and cover. Installation shall be in accordance with the manufacturer's attached instructions. The door shall be manufactured and assembled in the United States. Manufacturer shall guarantee the door against defects in materials and workmanship for a period of ten (10) years.

B. Additional Features:

1. Bituminous Coating – A bituminous coating shall be applied to any part of the aluminum frame that comes in contact with the concrete.

2. Slamlock – The hatch shall be equipped with a watertight stainless steel slamlock with threaded plug, removable outside key, and fixed inside handle. The slamlock must latch onto a stainless steel catch that is bolted to the frame.

3. Hinged on Opposite Short Sides – The doors of the hatch shall be hinged on opposing short sides.

4. Hinged Aluminum Safety Grate – The hatch shall have a fall through prevention system capable of withstanding a load of 300 pounds per square foot. The hatch should not rely on the safety grate to achieve its 300 pounds per square foot. Instead both the hatch and safety grate should independently achieve a rating of 300 pounds per square foot. It will consist of an aluminum grate with 5" x 5" openings that rotates on hinges that are welded to the hatch frame. When the grate is lifted to its open position, it will lock in place and serve as a barrier. The door cannot be closed until the Hinged Aluminum Safety Grate is completely closed. (Will reduce clear opening.)

C. Manufacturer: The floor access door shall be Model TPD as manufactured by U.S.F. Fabrication, Inc. or equal.

2.11 VALVE CHAMBER HATCH

A. The hatch shall be as indicated on the Drawings. Door leaf shall be ¼-inch thick aluminum diamond plate reinforced for a 300 p.s.f. live load. The frame shall be extruded aluminum channel section with an integral anchor flange on all four (4) sides. The frame shall include an EPDM odor reduction gasket that reduces the amount of odor that escapes from below the door and a 1-1/2 inch threaded drain coupling. The floor access door shall be equipped with a flush drop handle that does not protrude above the cover, and a stainless steel hold open arm with red vinyl grip that automatically locks the cover in the 90 degree open position. The door shall have stainless steel hinges and stainless steel tamper resistant bolts/locknuts. A staple for a padlock shall be supplied for security. All stainless steel components shall be type 316 alloy. An adhesive backed vinyl material that protects the product during shipping and installation shall cover the entire top of the frame and cover. Installation shall be in accordance with the manufacturer's attached instructions. The door shall be manufactured and assembled in the United States. Manufacturer shall guarantee the door against defects in materials and workmanship for a period of ten (10) years.

B. Additional Features:

1. Bituminous Coating – A bituminous coating shall be applied to any part of the aluminum frame that comes in contact with the concrete.

2. Slamlock – The hatch shall be equipped with a watertight stainless steel slamlock with threaded plug, removable outside key, and fixed inside handle.

The slamlock must latch onto a stainless steel catch that is bolted to the frame.

C. Manufacturer: Model TPS as manufactured by U.S.F. Fabrication, Inc. or equal.

2.12 PORTABLE HOIST

A. A portable adjustable (35"-42") stainless steel hoist which has an integral base that is mounted to the top slab shall be provided. The hoist shall have a 2000 lb. maximum capacity and shall be capable of lifting the pumps without entering the wet well. The portable hoist shall be manufactured by Thern or approved equal. The hoist base shall be mounted so the hoist can reach both pumps. Manufacturer: Model number 5124M1 with options 524 and WS19-36NO cable assembly. One option WS19-36NO shall be included for each pump.

2.13 APPURTENANCES

A. Pump Guide Rails: Non-sparking stainless steel.

B. Pump Mounting Plates and Guide Rail Braces: Stainless steel.

C. Guide Rail Supports: Stainless steel.

D. Pump Lifting Cable: Stainless steel (stainless steel lift cable shall incorporate enough length to reach into portable hoist assembly).

E. Fasteners and Hardware: Stainless steel.

F. Pump/Control Cable: Cable shall be supplied by the manufacturer for the entire circuit, starting at the pumps and terminating in the pump control panel. Provide junction boxes and conduit seals as required.

G. Vent Pipes: Provide 4" galvanized iron vents with return bends and No. 8 bronze mesh insect between two flanges. Confined space warning sign should be affixed to wet well vent pipe.

2.14 ELECTRICAL

A. Wiring:

1. All wiring shall be minimum 600 volt (UL) type MTW or AWM and have a current carrying capacity of not less than 125% of the full load current.

2. The conductors shall be in complete conformity with the National Electric Code, state, local and NEMA electrical standards.

3. To ensure the safety of all personnel working with this equipment, as well as providing a simple means of tracing wires when troubleshooting, all wiring shall be color coded in strict accordance with the wiring diagrams furnished by the equipment supplier.

B. UL Approval:

1. The control panel shall be constructed in compliance with Underwriter's Laboratories Industrial Control Panels listing and follow-up service, utilizing UL listed recognized components where applicable.

C. Enclosure:

1. The described equipment shall be housed in individual NEMA 3R stainless steel enclosure arranged to be freestanding outdoors where shown on the drawings. Controls should be mounted on a deadfront door of the enclosure for easy access by operators.

2. All major components and sub-assemblies shall be identified as to function with laminated, engraved Bakelite nameplates or similar approved means.

3. The following described equipment shall be furnished as the control systems required and matched to the specific pumping station equipment.

D. Power Supply and Metering:

1. The incoming service shall be 460 volts, 3 phase, 4 wire, 60 cycle. The control shall operate 40 HP motor(s) on a pump down mode, and include items as specified hereinafter.

2. Main Circuit Breaker: A properly sized molded case circuit breaker shall be provided as the main power disconnecting device for the control panel. The circuit breaker must have a minimum ampere interrupting capacity of 25,000 @ 480 volt symmetrical RMS amps.

E. Lightning Arrestor:

1. A lightning arrestor shall be supplied in the control and connected to each line of the incoming side of the power input terminals. The arrestor shall protect the control against damage due to lightning strikes on the incoming power line.

F. Phase Monitor:

1. A solid state, phase sequence/failure and under voltage release relay shall be provided to ensure additional running protection for the pump motors. The relay shall be complete with an LED to indicate proper phase sequence, all phases in operation and voltage within limits. The relay shall also include an adjustable voltage monitor, be UL and CSA certified and be complete with automatic reset feature.

G. Pump Circuit Breaker:

1. A thermal magnetic circuit breaker shall be supplied as branch circuit protection for each pump motor. The circuit breaker must have a minimum ampere interrupting capacity of 10,000 @ 480 volt symmetrical RMS amps. The circuit breakers shall be operable through the operator's door of the enclosure and include provision for padlocking in open position.

2. The circuit breaker shall be properly sized to protect the control circuit conductors, motor starter and the motor against overcurrent due to short circuit or grounds.

H. MOTOR STARTERS (Reduced Voltage Soft Starter)

Provide a microprocessor-controlled starter for three-phase induction motors. As manufactured by Benshaw type RediStart Digital motor starter. An equivalent design by an alternate manufacturer will be considered.

1. Starter shall include the following :

- NEMA (National Electrical Manufacturers Association) specified frame size.
- Solid state design.
- Current limited reduced voltage starting.
- Closed-loop motor current control.
- Programmable motor protection.
- Programmable operating parameters.
- Programmable metering options.
- Variable voltage control.
- 120 VAC Control Voltage

2. Starter shall operate within applied voltage and frequency values of 480VAC and 60Hz.

3. The starter shall be programmed for a motor FLA and the motor service factor. The starter shall continually monitor the amount of current being delivered to the motor.

4. Starter shall include the following standard features:

- Adjustable ramp time (0 - 120s)
- Adjustable initial current
- Adjustable maximum current
- Adjustable full-voltage kick start (0.1 to 5 seconds or Off)
- Selectable motor deceleration control for Pumps (0 - 60s)
- Variable voltage control input (0 to 5 volts, 0 to 10 volts, 4 to 20mA)
- Extreme current imbalance/line phase loss detection
- Adjustable line current imbalance protection (5 - 40%)
- General fault, motor power and up to speed form "C" contacts
- Line phase sequence sensitivity or insensitivity
- Phase loss and phase reversal protection
- Selectable solid state overload class (10, 20, 30, or None)

- Negative sequence overload biasing.
- Adjustable motor full load amps (1 - 1600A)
- Adjustable motor service factor (1.00 - 1.40)
- Adjustable current transformer ratio
- Adjustable stalled motor detection (0 - 210s)
- Line frequency tracking (23Hz through 72Hz)
- 120VAC external trip input (fault detection active on start or UTS)
- 800% FLA instantaneous overcurrent detection
- Overcurrent (jam) protection (50 - 400%, 1 to 15 seconds or disabled)
- Undercurrent protection (25 - 100%, 1 to 15 seconds or disabled)
- Shorted SCR detection and SCR condition indication
- 3-digit 7-segment LED Display
- Programmable metering

5. LED Display - A three character, alphanumeric LED display located on the control card shall display:

   - Starter status information.
   - Operating parameters.
   - Condition codes.
   - Fault codes.
   - Thermal Overload Content.
   - Metering.
   - Remote display active.

6. LED indicators - Each starter shall have indicating LEDs for:

   - Power On.
   - SCR Condition.

7. Control Relays

   The starter shall have four control relays as follows:

   - Start/Stop input relay: (This contact shall energize whenever the SCRs are conducting as a direct command from the starter).
   - Fault output relay: (The relay shall energize any motor or starter fault is detected)
   - UTS (up to speed) output relay. (The contact shall engage when a true motor Up to Speed condition is achieved)
   - Motor power output relay.

   Each relay shall provide three Form "C" relay contacts capable of 250VAC, 16A Resistive and 8A Inductive. The fault contact shall be only capable of 125VAC 2A Resistive, 1A Inductive.

I. Receptacle: An inner door mounted ground fault interrupter (GFI) type convenience receptacle rated at 15 amperes shall be supplied for the operating of trouble lights, drill, etc. It shall be protected by a separate 15 ampere trip rated circuit breaker.

J. Condensation Protective Heater: An 800 watt, 120VAC thermostatically controlled, fan driven heater shall be supplied in the control panel to maintain a stable temperature and protect the electrical and electronic equipment from the harmful effects of condensation, corrosion and low temperatures.

K. Motor Ground Fault: Motor Ground fault protection will be provided for each pump motor to ensure the integrity of the submersible pump cords.

L. Control Breaker – Door Mounted: The panel shall be supplied with a properly sized control power circuit breaker. The breaker shall be operator door mounted and shall supply power to all control wiring within the enclosure.

M. USEMCO "Sentry" or approved equivalent Pump Controller:

1. The control system shall utilize standard "off the shelf" equipment. Job specific, "one-of-a-kind" customized software and hardware components will not be accepted
2. The equipment shall be protected from transient voltages and surges induced into the signal lines. The contractor shall provide a permanent earth ground connection to the panel ground lug in order to insure proper operation of transient protectors.
3. A microprocessor-based automatic pump and alarm control system shall be provided for the pump station incorporating an industrial-grade, 16-bit CMOS microcomputer and associated elements suitable for achieving performance as hereinafter described. The controller shall incorporate the following:

   • Internal diagnostics.
   • Real time clock calendar.
   • Floating-point math.
   • Battery back up.
   • Non-proprietary RTU communication.
   • (4) PID loops.

4. The system shall incorporate UL 508 Industrial Control Panel approved elements as required of all components of the panel and shall be furnished with all necessary hardware and software to accomplish level-responsive pump and alarm operation with software specifically suited to this project.
5. All of the discrete I/O circuitry of the computer-based system shall be built to the IEEE 472 (1974) Surge Withstand Capability Standards. The automatic pump and alarm control system computer shall be the standard product of the control system manufacturer and specifically suited for this type of industrial control panel service. All job connections shall be a UL recognized clamp type barriered screw terminals.
6. The constant speed drive equipment shall be programmed to respond to variations in the wetwell in a manner wherein the hydraulic requirement will be accommodated in the pumping program using simple menu-related operator interface routines.
7. Upon power-up, the Controller shall go through a timing routine, which allows the analog signal and display to stabilize before any control, or alarm outputs are enabled. After the stabilization period, the control circuits of the Controller shall be sequentially enabled on a time-step arrangement. In addition to the time delay upon power-up, the differential-level control circuits shall each be forced to an off condition upon power up so that a level excursion will need to go past their turn-on elevation for them to operate.

8. An alternator shall operate the pumps in a First-on/First-off (FOFO) sequence and can be configured to sequence the pumps every start, every 24 hours, on the lowest run time or manually. The alternator shall be capable of accepting pump failure and/or advance inputs and shall automatically transfer to the next pump sequence when failure condition input is sensed. The alternator shall provide automatic transposing of the operating sequence of the control relays for the pumps on successive starts. The FOFO alternator sequencing shall operate such that the next load turned on is always the one that has had the longest opportunity to rest since its last operation.
9. Microprocessor based, programmable controller and operator interface shall provide all of the above controls and operations. A redundant back up float system shall be incorporated into the controller along with programmable automatic operation. Operator interface shall be a minimum of 3" x 4" LCD.
10. The automatic pump and alarm control shall employ an operator interface having a 240 x 80 pixel STN monochrome liquid crystal display. The operator interface shall have an IEC standard IP65F sealed housing. The display shall be rated for 50,000 hours and include an adjustable sleep mode to increase life. The unit shall support four levels of password protection.
11. The Operations Manual shall be included for the pump controller.

N. Controller Configuration:

1. The pump controller shall operate on a 4-20mA input via a submersible transducer, and shall be capable of being configured at the factory or jobsite to perform operating functions as described below. All configurations shall be password protected and shall be provided as a minimum as follows:

   Duplex Pump Operation.

   -Clock hours (0-23) and minutes (0-59).
   -Calendar day of week (0-6 for Monday - Sunday).
   -Wetwell transducer rating (1.0-15.0 PSI).
   -Wetwell transducer offset.
   -Wetwell cross sectional area for Flow Monitor
   -Lag pump disable for non-additive systems.
   -Pump Alternation method.
   -Shut down, Alarm only or Lag pump designation upon Seal fail.
   -On board or Redundant float back up with weekly test feature.
   -Selectable pump fault for Low oil or Bearing overtemperature

   The pump controller shall include the field adjustable delay timers. All timer settings shall be password protected and shall be provided as follows:

   -Pump 1 start fail delay (0-99 seconds).
   -Pump 2 start fail delay (0-99 seconds).
   -Lead pump start delay (0-99 seconds).
   -Lag pump start delay (0-99 seconds).
   -Lead pump stop delay (0-99 seconds).
   -Lag pump stop delay (0-99 seconds).
   -High Level alarm delay (0-99 seconds).

-Low Level alarm delay (0-99 seconds).
-Delay between calls (0.1-9.9 minutes).
-Back up float pump down timer (1-5 minutes).
-Back up float lag call timer (0-99 seconds).

The pump controller shall include the field adjustable set points. Set points shall be password protected and provided as follows:

-Lead pump start.
-Lead pump stop.
-Lag pump start.
-Lag pump stop.
-High Level Alarm.
-Low Level Alarm.
-Back up high float.

The menu driven screen shall display the following:

-Wetwell Level.
-Pump Run time values scaled to hours and tenths.
-Pump Start counters.
-Flow Rates.
-Pumping Rates.
-Alarm Messages.

O. Alarm Messages

In the event of an alarm condition the operator interface shall display an alarm message. The following list of alarms shall be provided:

-Low Level.
-High Level.
-Pump 1 Fail.
-Pump 2 Fail.
-Transducer Fail.
-Seal 1 Fail.
-Seal 2 Fail.
-Motor 1 Overtemp.
-Motor 2 Overtemp.
-Pump 1 Fail (Configurable from external device).
-Pump 2 Fail (Configurable from external device).
-Backup Float Test Fail.

P. Flow Monitoring

A flow-monitoring algorithm shall be included in the controller to measure influent flow. This algorithm shall calculate the incoming flow rate during periods of pump inactivity, detecting the change in level and using the configured wetwell area. Pumping rates shall be calculated during periods of pump activity, detecting the change in level and using the configured wetwell area and average incoming flow rate. The controller shall display incoming flow and totalized flow in gallons per minute. It also shall display each pump's rate in gallons per minute.

Q. Pump Seal Fail

A seal failure relay specifically designed to interface with a contact closure from each of the specified pumps shall be included. A Seal Fail alarm message shall be displayed on the controller. In addition the controller should be configured to shut down the pump or designate it to the lag position until the condition is corrected.

R. Over Temperature Pump Protection

Over temperature protection relays shall be provided in the control panels to operate in conjunction with the over temperature switch in each pump motor. The controller shall provide an Overtemp Fail alarm message and pump lockout of operation upon occurrence of high temperature. The circuitry shall also include a reset push button on the controller for manual reset capability.

S. Ammeters

A 3½" ammeter shall be provided for each pump motor. Each meter shall be connected to a current transformer. The meter and current transformer shall be sized such as to provide half scale readings when the pump motors are running at designed conditions. The ammeter shall meet ANSI specifications C-39.1. The ammeter shall be mounted on the operator's door of the control panel.

T. Selector Switches

A 22 mm oil tight, three-position, "Hand-Off-Automatic" selector switch shall be flush-mounted on the operator's door of the control panel for the operation of each motor starter. This selector switch shall operate the starter when it is in either the "Hand" position or the "Automatic" position, and the automatic control system is calling for the operation of the equipment in the manner as herein described.

U. Status Indicators

A 22 mm oil tight green "Pump Running" push-to-test pilot light shall be flush-mounted on the operator's door of the control panel. This pilot light shall be operated from a respective starter auxiliary contact. The pilot light shall have a replaceable bulb.

V. Weather Proof Alarm Light

A weatherproof high water, 100-watt alarm light assembly including a high impact resistant lexan red lens and wire guard with mounting bracket shall be included, for panel or remote mounting. The alarm light will glow at half brilliance during normal operation. During alarm conditions, a solid-state flasher shall be included to strobe the alarm light from full brilliance to off 90 times per minute for any of the specified alarm conditions.

W. Power Fail Alarm

A 120-Volt DPDT control relay powered from the load side of the control power circuit breaker shall be included.

X. Telemetry Contacts

Dry contacts rated 10 amps shall be provided, and wired to a numbered terminal strip inside the panel, to interface with remote telemetry or dialing equipment for the following:

- Motor Heat Sensor(s)
- High Level Alarm
- Low Level Alarm
- Moisture Sensor(s)
- Power Fail
- Pump(s) Run
- Pump Fail
- Transducer Fail

2.15 SUBMERSIBLE WET WELL LEVEL SENSING TRANSDUCER

A. The submersible transducer shall be a piezoresistive type with optional ranges of 0-100 INWC to 0-100 psi. The device shall require a 10-30 VDC low voltage power supply. The response time of the transducer shall be less than one millisecond. Accuracy of the equipment should be #0.25% of the entire range and the repeatability shall be #0.05% of the entire range. The transducer shall be capable of being used in media from +15°F to +122°F, and the storage temperature for the unit shall be -22°F to 176°F. Shock resistance per IEC 770 for mechanical shock should be 1000g, and the vibration resistance per IEC 770 for vibration under resonance conditions should be 50g. Protection against reverse polarity, short circuit, and overvoltage should be included in the transducer. The transducer shall carry an IP68 (NEMA 6) rating and shall be submersible up to 350 ft. All wetted parts shall be 316 SS. The transducer shall have a vented polyurethane cable with a tensile strength of 220 lbs.

1. Manufacturer: WIKA model LS-10 or equal.

B. An optional anti-clog attachment shall be included for the above referenced submersible transducer. The anti-clog attachment shall be made of all 316 SS, and shall be silicone liquid filled. The anti-clog attachment shall also include a 2" diaphragm for performance. In case of transducer failure, the anti-clog attachment should be able to be removed and used with a new transducer. Transducers with anti-clog attachments that cannot be removed shall not be acceptable. The anti-clog attachment shall be able to be used with all models of WIKA transducers.

1. Manufacturer: WIKA LS-10 with a LevelGuard™ or equal.

2.16 WET WELL LEVEL SENSING FLOAT SWITCHES

A. The floats shall have a molded polyethylene body, internal redundant polyurethane foam floatation, potted switch/cable connections and fine stranded AWG #18 cable with heavy-duty synthetic rubber jacket in lengths as required to run unspliced to the control panel.

B. The contractor shall furnish, install and wire the float switches as shown on the drawings. The float switches shall be individually suspended in the wetwell with weight kits. The float switch cables shall be suspended from a cable rack mounted to the top of the wetwell.

C. The redundant back-up float controller shall connect to the float switch level sensors through an intrinsically safe module. The module shall provide an intrinsically safe interface for the sensors located in a hazardous area rated Class 1, Group D. The module shall contain an LED indicator providing visible indication of sensor actuation. The intrinsic safety barrier shall be UL listed.

2.17 ALARM DIALER

A. The automatic dialing alarm system shall be microprocessor based and have the capability to monitor from 4-48 dry contact or digital inputs, 8 to 48 analog inputs or energize from 4 to 24 relays in any combination. The dialer shall be field upgradeable to allow for future conditions. Each of these inputs shall monitor a set of dry contacts (normally-closed or normally-open). In addition, the dialer shall monitor the AC power and battery voltage continuously. Upon detecting an alarm on any of its inputs, a low battery condition or detecting loss of its AC power, the dialer shall begin dialing the first of up to 16 user programmed telephone numbers.

B. The dialer shall speak user-recorded messages to the called party describing its location and the alarm conditions that are present. The dialer shall then verbally request that an acknowledgment be given. The called party shall acknowledge the call by momentarily depressing the '8', '9' or '*' key on their telephone keypad. If the dialer is not acknowledged during the call, it shall hang up, wait from 1 to 3600 seconds and then dial the next number in its phone list. If a successful acknowledgment occurs, the dialer shall give a sign-off message, hang up and then wait a user-programmed period of time for the alarm conditions to be corrected. If this period of time elapses and the alarm condition(s) still exist, the dialer shall begin the alarm notification cycle again. The dialer shall have relay outputs that shall remain energized as long as the dialer has any unacknowledged alarms.

This output shall be available to allow for wiring to an external horn, buzzer, light or other local alarm device. Alternatively, the user shall be able to program the dialer to allow remote activation of this relay from a telephone keypad.

C. Construction:

1. Enclosure: Minimum rating should be NEMA 4X

2. Power Requirements: 115 VAC 10% 60 Hz; 25 watts

3. Printer Port: Centronics parallel – DB25 (female)

4. Serial Port: 38.4Kbaud – DB9 (male)

5. Electrical Protection: Transient voltage/surge protection shall be provided on power line, telephone and all input channels. Solid state surge protection provided on digital input, analog input, serial port, parallel port, telephone and AC power circuitry.

6. The alarm dialer shall be mounted in its own enclosure within the pump control panel. Alarm dialer shall have its own surge protection separate from any panel surge protection.

   a. Manufacturer: Antx Elite or RACO Verbatim or Equal

2.18 MAGNETIC FLOWMETER AND TRANSMITTER

A. A 4-inch magnetic flow tube with remote transmitter shall be provided. The flow tube shall be flanged and placed in the valve vault discharge piping. The transmitter shall be mounted remotely in the control building. Provide optional indicator, keypad and configure for totalizing flow.

B. Flow tube: ptfe liner; 316 ss electrodes; Foxboro 9300A.

C. Flow transmitter: Foxboro IMT25, remote mounted.

PART 3 - INSTALLATION

3.1 FABRICATION, INSTALLATION, AND FIELD TESTING

A. General: Fabrication and installation of all equipment and materials required for the sewage lift stations and Pumping stations shall be performed by the Contractor as per manufacturer's instructions, drawings, cut sheets, and the Specifications and Drawings. Testing of all equipment and materials after installation shall be considered an integral portion of the construction process. The Contractor shall repair any item not meeting

testing criteria at his own expense. The Contractor shall also furnish all necessary labor, equipment, and materials for testing and shall bear all the costs thereof.

B. Fabrication and Installation:

1. All anchorage steel required for the equipment shall be supplied by the equipment manufacturer. The Contractor shall install the anchorages in the concrete structures in accordance with drawings and instructions furnished by the equipment manufacturer. Foundation anchor steel shall be grouted as shown on the plans.

2. The Contractor shall furnish and install all sleeves and adapters in the wall required for process piping. The Contractor shall install all piping and fittings and shall make all joints and connections, including wall sleeves, watertight by means acceptable to the Engineer.

C. Start-Up

1. Prior to the start-up of any piece of mechanical equipment, the Contractor shall have submitted to the Engineer four copies of printed instructions as specified herein.

2. Start-up of all mechanical equipment shall be conducted by the Contractor, under the direction of the manufacturer's representative, and in the presence of the Engineer. Unless otherwise allowed by the Engineer, in writing, the manufacturer's representative shall be present during the start-up of the equipment.

3. As part of the start-up, the manufacturer's representative shall instruct the operating personnel of the Owner on the proper operation and maintenance of the equipment. Eight (8) hours and two (2) separate visits shall be included in the bid price.

4. The manufacturer's representative shall issue a written start-up report to the Engineer, the Contractor, and the manufacturer containing the following information:

   a. A list of each piece of mechanical equipment which was started up.
   b. The manufacturer of the equipment.
   c. The date of the start-up.
   d. A list of persons present during the start-up.
   e. A list of persons present during the operation and maintenance instructions given by the manufacturer's representative.
   f. Any problems noted during the start-up.
   g. Any recommendations which would improve the operation.
   h. A statement that the equipment is or is not operating properly and why.
   i. The name of the person directing the start-up and the company he represents.

D. The Contractor shall be responsible for coordinating and making the necessary arrangements to schedule the start-up of the equipment. The Contractor shall include all costs relating to equipment start-up in the bid price for the installation of the equipment.

END OF SECTION 11100

APPENDIX F

STANDARD CONSTRUCTION DETAILS

Table of Contents

Typical Building Sewer	S-1
Typical Grinder Pump Installation	S-2
Lateral Notes	S-3
Typical Excavation, Backfill, and Pipe Embedment Detail	S-4
New Sewer Line Parallel to Existing Water Main Detail	S-5
Concrete Encasement Detail	S-6
New Sewer Line Crossing Under Existing Water Main Detail	S-7
New Sewer Line Crossing Over Existing Water Main Detail	S-8
Concrete Anchors – Slope Breakers	S-9
Thrust Blocking	S-10
Thrust Clamping	S-11
Trench Plug Detail	S-12
Typical Manhole Detail	S-13
Cast Iron Manhole Frame and Cover	S-14
Cast Iron Watertight Manhole Frame and Cover	S-15
Manhole Frame – Anchor Bolt Detail	S-16
Manhole Base Typical Channel Configuration	S-17
Typical Outside Drop Manhole Detail	S-18
Typical Inside Drop Manhole Detail	S-19
Manhole Frame and Cover Adjustment Detail	S-20
Manhole Abandonment Detail	S-21
1,000 Gallon Grease Interceptor	S-22
Air Release-Valve Manhole	S-23
Terminal Cleanout Assembly	S-24
Intermediate Cleanout Assembly	S-25

Intermediate Cleanout Assembly	S-25
Flushing Hydrant Detail	S-26
2 Way Branch Cleanout Assembly	S-27
3 Way Branch Cleanout Assembly	S-28
Typical Tie-In to Existing Manhole Detail	S-29
Pump Station Plan View	S-30
Pump Station Section View	S-31
Pump Station Process & Instrumentation Diagram	S-32
Force Main Tracer Wire Test Station	S-33
Force Main Metering Manhole Detail	S-34
Township Pavement Restoration Detail	S-35

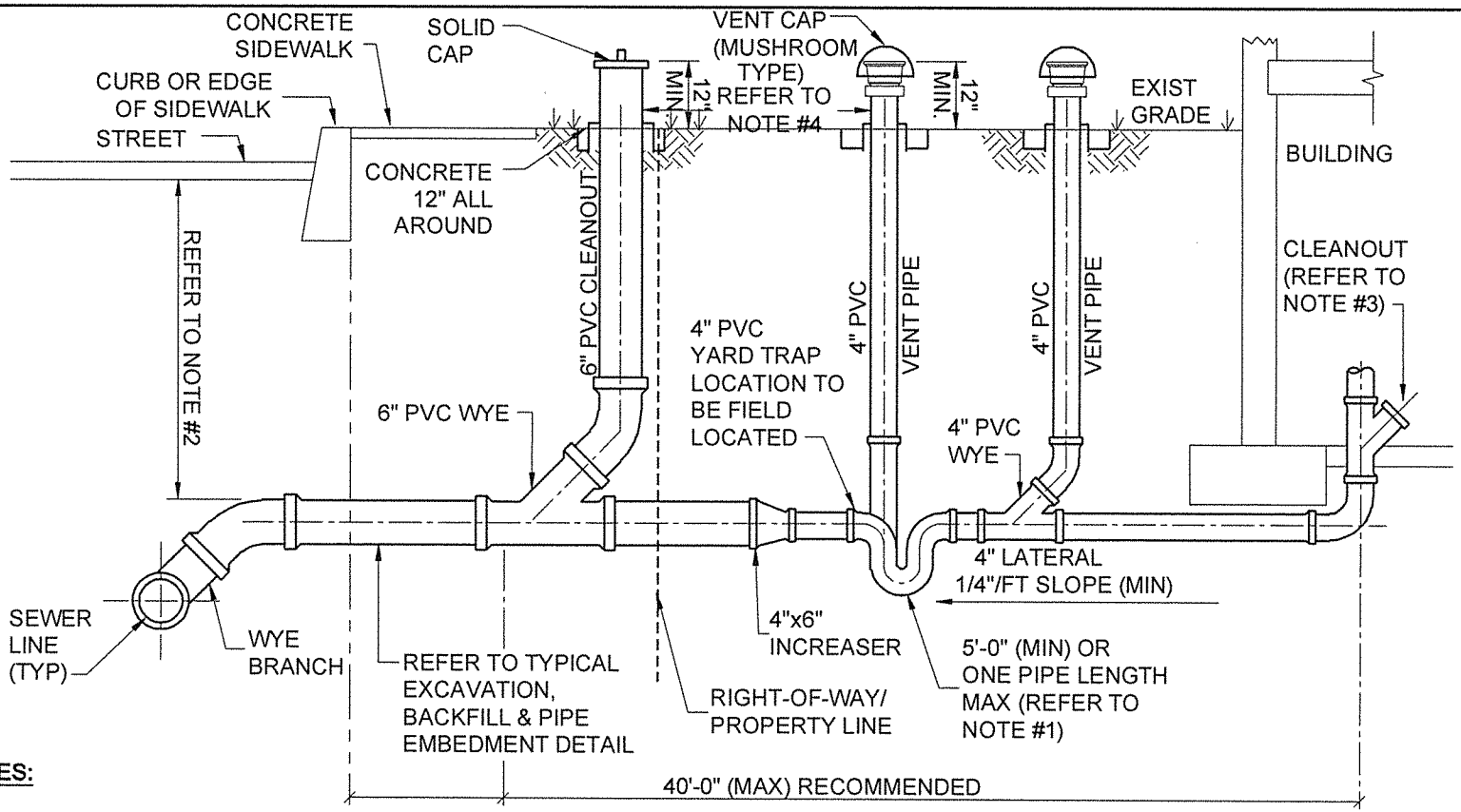

NOTES:

1. 4" SINGLE RUNNING TRAP WILL BE INSTALLED WITHIN ONE PIPE LENGTH OF THE END OF THE 6" LATERAL.
2. MINIMUM DEPTH OF 4" LATERAL WILL BE 48" BELOW FINISHED GRADE UNLESS APPROVED BY TOWNSHIP ENGINEER.
3. IF THERE IS NOT A CLEANOUT LOCATED INSIDE OF DWELLING AN ADDITIONAL CLEANOUT SHALL BE INSTALLED IMMEDIATELY OUTSIDE OF THE BUILDING PRIOR TO RUNNING TRAP
4. LOCATE VENT CAP AND CLEANOUT IN LAWN AREA. MUSHROOM CAP SHALL BE USED ON VENT. A 6" CLEANOUT SHALL BE INSTALLED EVERY 50 FEET.
5. IN GENERAL, SANITARY SEWERS SHOULD BE LOCATED AT LEAST 100 FEET FROM PUBLIC WATER SUPPLY SOURCES AND 50 FEET FROM PRIVATE WATER SUPPLY SOURCES, UNLESS THE SANITARY LINES ARE ENCASED IN CONCRETE OR APPROVED EQUIVALENT.
6. REFER TO DRAWING S- 3 FOR LATERAL NOTES.

TYPICAL BUILDING SEWER

SCALE: NONE

Entech Engineering, Inc.
Engineering Architecture Construction
Corporate Office:
4 S. Fourth Street Reading, PA 19602
ph: 610.373.6667 fx: 610.373.7537
Pottsville, PA ph: 570.628.5655
Mountaintop, PA ph: 570.868.0275
Lititz, PA ph: 717.626.6666
www.entecheng.com 1.800.825.1372

PREPARED BY	CHECKED BY	APPROVED BY	PROJECT NO.
DYH	BAK	EJP	4147.18

DATE: 6/13/12

SCALE: NONE

FOSTER TOWNSHIP
TYPICAL BUILDING SEWER

DRAWING NO. S-1

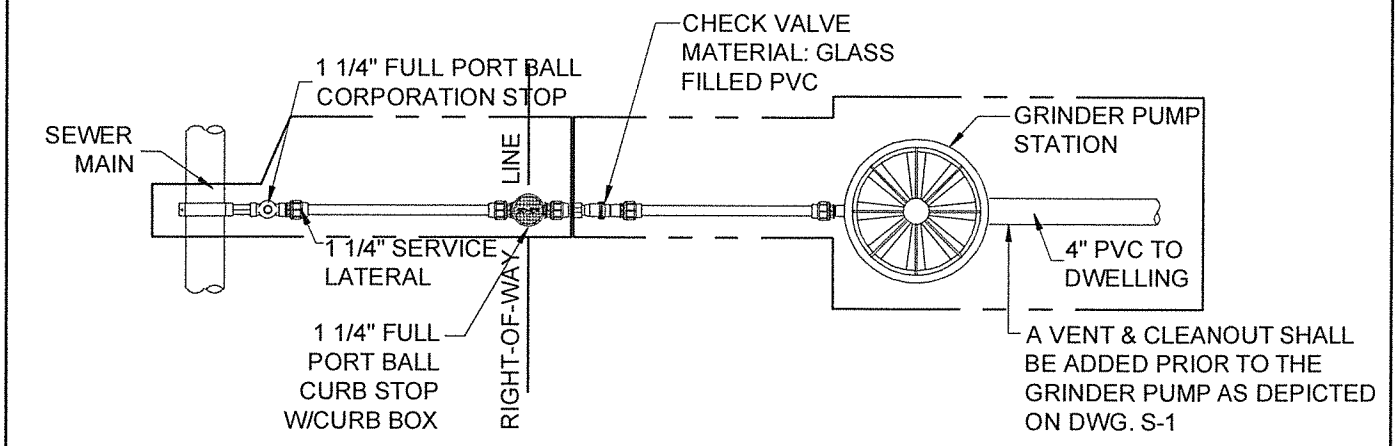

TYPICAL GRINDER PUMP LATERAL INSTALLATION - PLAN

SCALE: NONE

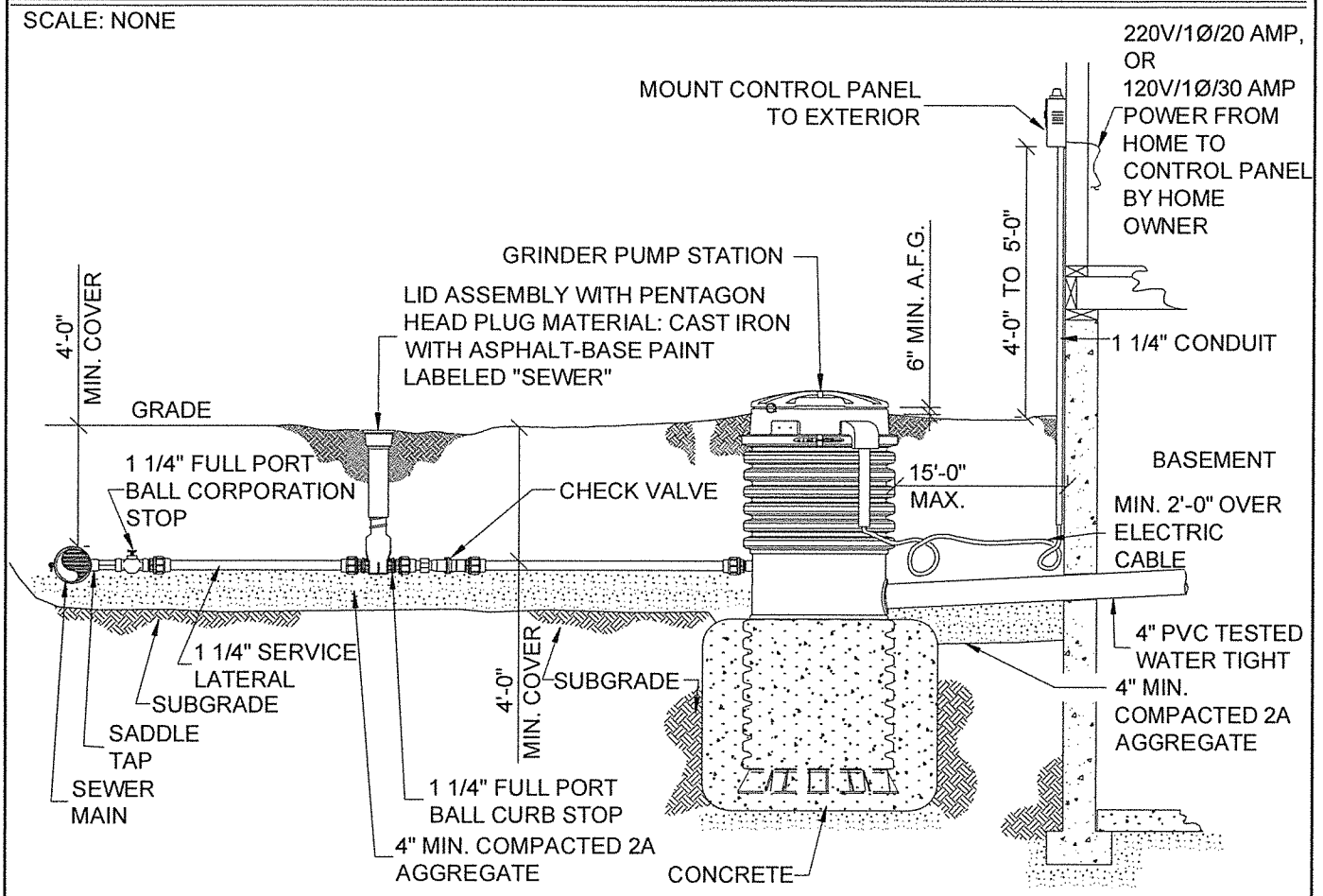

TYPICAL GRINDER PUMP INSTALLATION - ELEVATION

SCALE: NONE

NOTES:
1. REFER TO DRAWING S-3 FOR LATERAL NOTES.
2. IF GRINDER PUMP IS TO BE INSTALLED INDOORS, IT WILL NEED PRE-APPROVAL FROM TOWNSHIP.

Entech Engineering, Inc.
Engineering Architecture Construction
Corporate Office:
4 S. Fourth Street Reading, PA 19602
ph: 610.373.6667 fx: 610.373.7537

Pottsville, PA ph: 570.628.5655
Mountaintop, PA ph: 570.868.0275
Lititz, PA ph: 717.626.6666
www.entecheng.com 1.800.825.1372

FOSTER TOWNSHIP
TYPICAL GRINDER PUMP INSTALLATION

PREPARED BY	CHECKED BY	APPROVED BY	PROJECT NO.	SCALE:	DATE:	DRAWING NO.
MBD	BAK	EJP	4147.18	NONE	6/13/12	S-2

LATERAL NOTES:

1. ALL MATERIAL USED FOR LATERAL INSTALLATIONS SHALL BE NEW, FREE FROM DEFECTS AND CONFORM TO ALL STANDARDS SET FORTH BY FOSTER TOWNSHIP.

2. ALL LATERALS MUST BE INSPECTED BEFORE BACKFILLING. COMPLETED DRAWINGS SHOWING THE EXACT LOCATION AND DEPTH OF LINE SHALL BE SUBMITTED TO THE TOWNSHIP DURING FINAL INSPECTION OR THE LATERAL WILL NOT BE AUTHORIZED TO USE.

3. ALL FEES MUST BE PAID IN PROPER AMOUNT BEFORE A CONNECTION PERMIT WILL BE ISSUED.

MATERIAL ALLOWED BY FOSTER TOWNSHIP FOR BUILDING GRAVITY SEWERS

1. PVC BELL AND SPIGOT SEWER PIPE / SDR 35.

2. 4" @ 1/4" / FT. MIN. GRADE
   6" @ 1/8" / FT. MIN. GRADE

LOW PRESSURE:
1. HDPE OR PVC
2. MINIMUM DIAMETER: 1 1/4 INCH

ENTECH
Entech Engineering, Inc.
Engineering Architecture Construction
Corporate Office:
4 S. Fourth Street Reading, PA 19602
ph: 610.373.6667 fx: 610.373.7537

Pottsville, PA ph: 570.628.5655
Mountaintop, PA ph: 570.868.0275
Lititz, PA ph: 717.626.6666
www.entecheng.com 1.800.825.1372

FOSTER TOWNSHIP
LATERAL NOTES

PREPARED BY	CHECKED BY	APPROVED BY	PROJECT NO.	SCALE:	DATE:	DRAWING NO.
DYH	BAK	EJP	4147.18	NONE	6/13/12	S-3

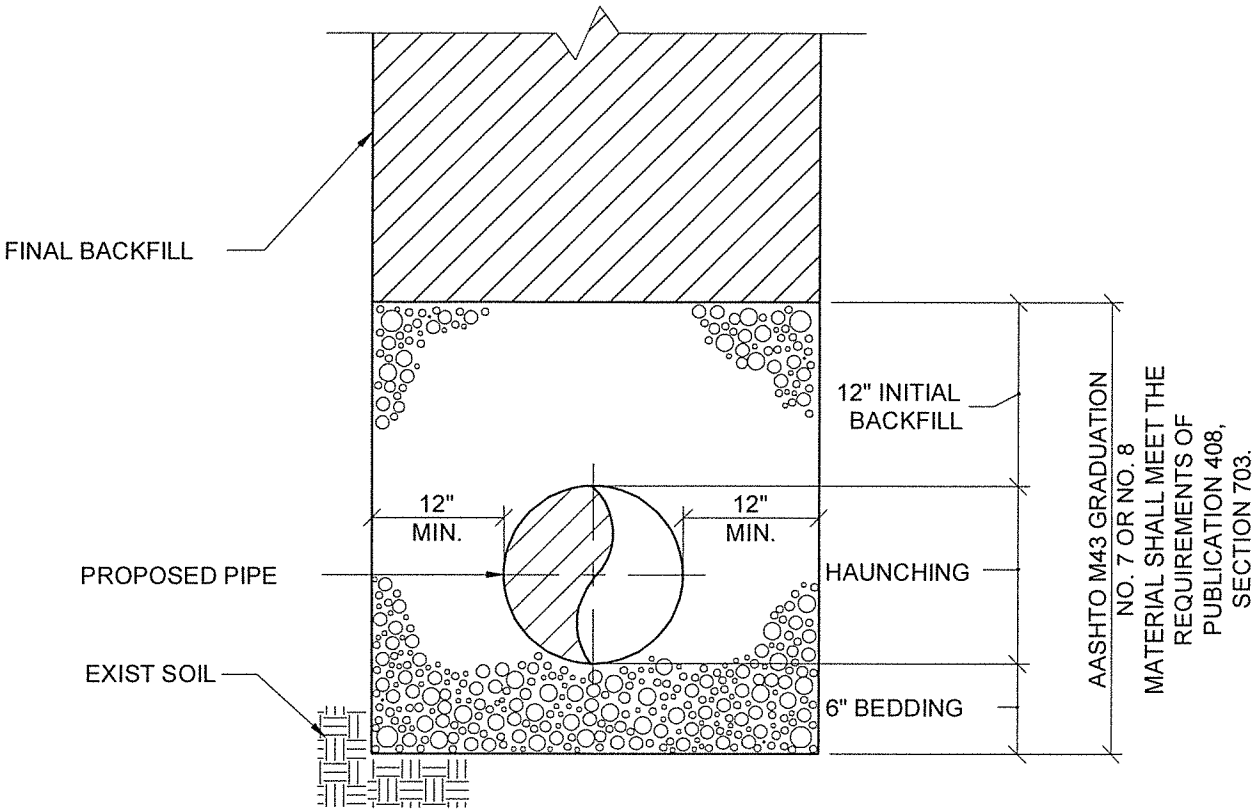

TYPICAL EXCAVATION, BACKFILL & PIPE EMBEDMENT DETAIL

SCALE: NONE

Entech Engineering, Inc.
Engineering Architecture Construction
Corporate Office:
4 S. Fourth Street Reading, PA 19602
ph: 610.373.6667 fx: 610.373.7537

Pottsville, PA ph: 570.628.5655
Mountaintop, PA ph: 570.868.0275
Lititz, PA ph: 717.626.6666
www.entecheng.com 1.800.825.1372

FOSTER TOWNSHIP
TYPICAL EXCAVATION, BACKFILL & PIPE EMBEDMENT DETAIL

PREPARED BY	CHECKED BY	APPROVED BY	PROJECT NO.	SCALE:	DATE:	DRAWING NO.
MBD	BAK	EJP	4147.18	NONE	6/13/12	S-4

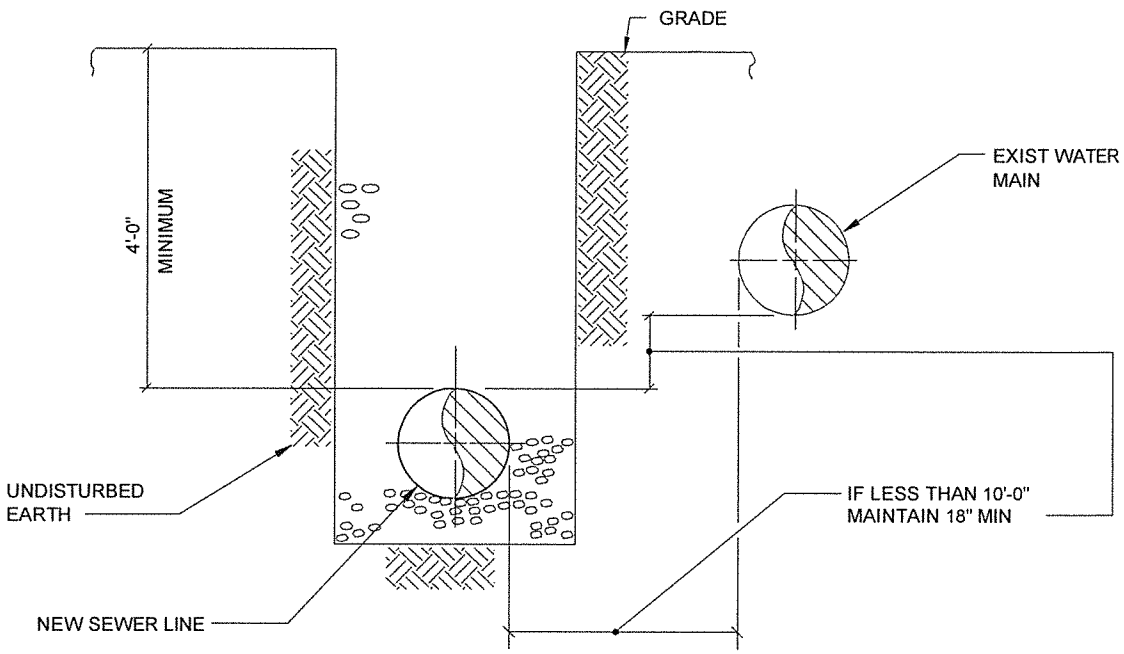

NEW SEWER LINE PARALLEL TO EXISTING WATER MAIN DETAIL

SCALE: NONE

Entech Engineering, Inc.
Engineering Architecture Construction
Corporate Office:
4 S. Fourth Street Reading, PA 19602
ph: 610.373.6667 fx: 610.373.7537

Pottsville, PA ph: 570.628.5655
Mountaintop, PA ph: 570.868.0275
Lititz, PA ph: 717.626.6666
www.entecheng.com 1.800.825.1372

FOSTER TOWNSHIP
NEW SEWER LINE PARALLEL TO EXISTING WATER MAIN

PREPARED BY	CHECKED BY	APPROVED BY	PROJECT NO.	SCALE:	DATE:	DRAWING NO.
DYH	BAK	EJP	4147.18	NONE	6/13/12	S-5

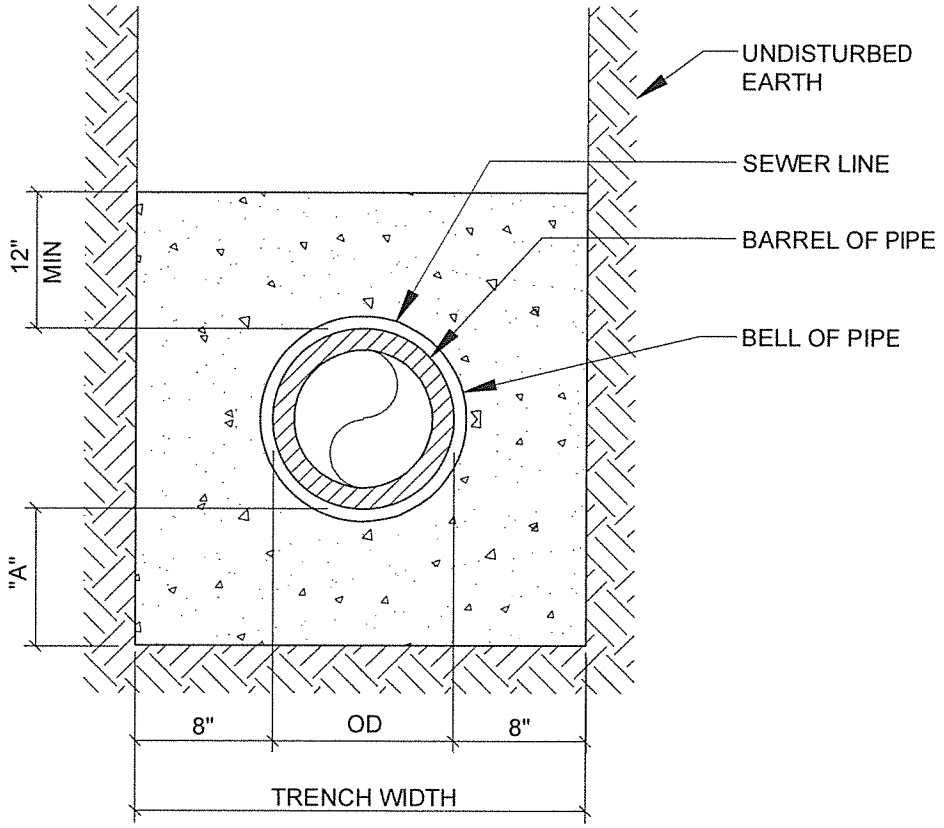

PIPE SIZE	"A"
4" - 16"	6"
18" - 48"	6"
54" - 84"	10"

NOTE: ALL CONCRETE SHALL HAVE MINIMUM COMPRESSIVE STRENGTH OF 3,000 PSI AT THE END OF 28 DAYS.

CONCRETE ENCASEMENT DETAIL

SCALE: NONE

Entech Engineering, Inc.
Engineering Architecture Construction
Corporate Office:
4 S. Fourth Street Reading, PA 19602
ph: 610.373.6667 fx: 610.373.7537

Pottsville, PA ph: 570.628.5655
Mountaintop, PA ph: 570.868.0275
Lititz, PA ph: 717.626.6666
www.entecheng.com 1.800.825.1372

FOSTER TOWNSHIP
CONCRETE ENCASEMENT DETAIL

PREPARED BY	CHECKED BY	APPROVED BY	PROJECT NO.	SCALE:	DATE:	DRAWING NO.
DYH	BAK	EJP	4147.18	NONE	6/13/12	S-6

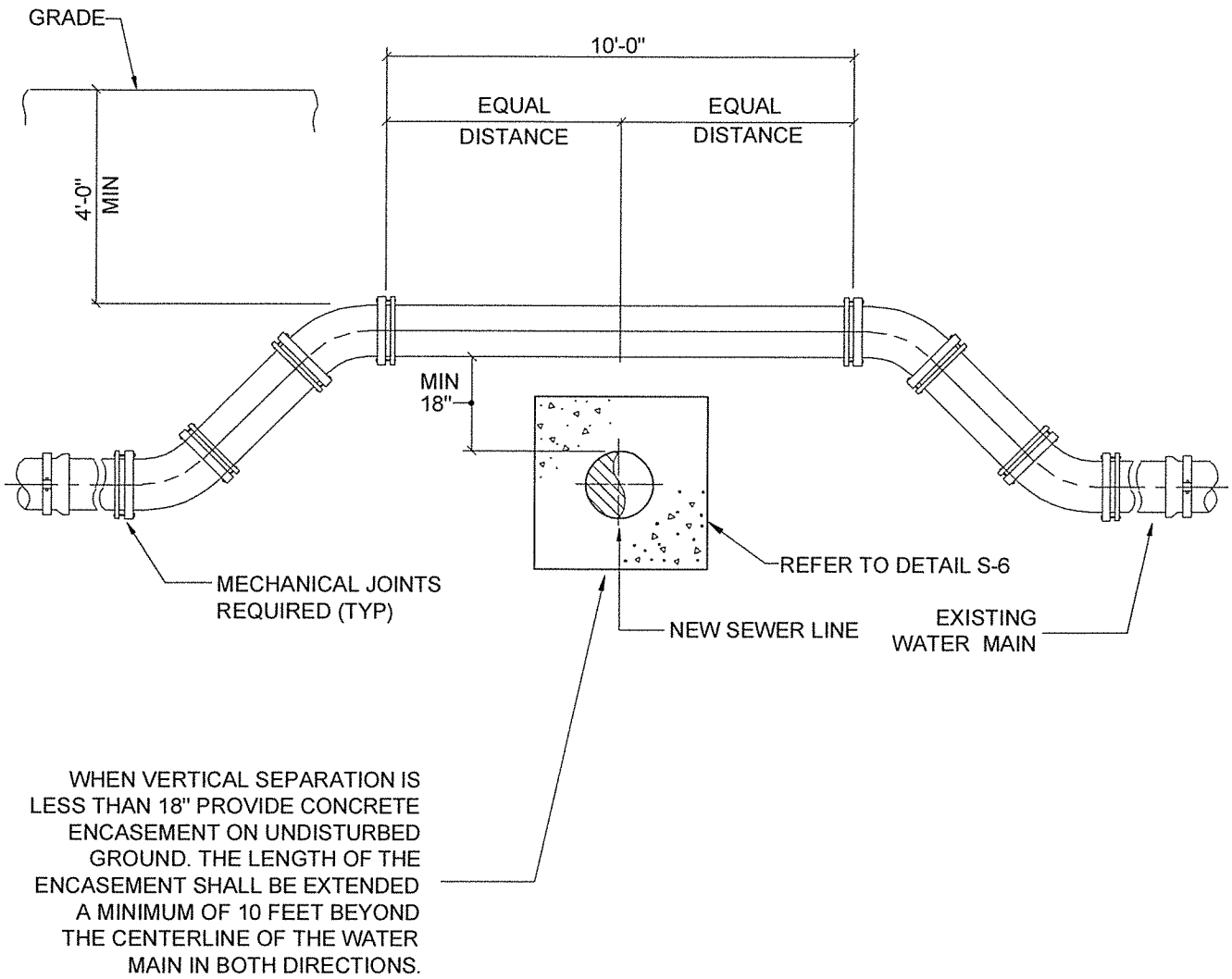

NOTE: ALL CONCRETE SHALL HAVE MINIMUM COMPRESSIVE STRENGTH OF 3000 PSI AT THE END OF 28 DAYS.

NEW SEWER LINE CROSSING UNDER EXISTING WATER MAIN DETAIL

SCALE: NONE

Entech Engineering, Inc.
Engineering Architecture Construction
Corporate Office:
4 S. Fourth Street Reading, PA 19602
ph: 610.373.6667 fx: 610.373.7537
Pottsville, PA ph: 570.628.5655
Mountaintop, PA ph: 570.868.0275
Lititz, PA ph: 717.626.6666
www.entecheng.com 1.800.825.1372

FOSTER TOWNSHIP
SEWER CROSSING UNDER EXISTING WATER MAIN DETAIL

PREPARED BY	CHECKED BY	APPROVED BY	PROJECT NO.	SCALE:	DATE:	DRAWING NO.
DYH	BAK	EJP	4147.18	NONE	6/13/12	S-7

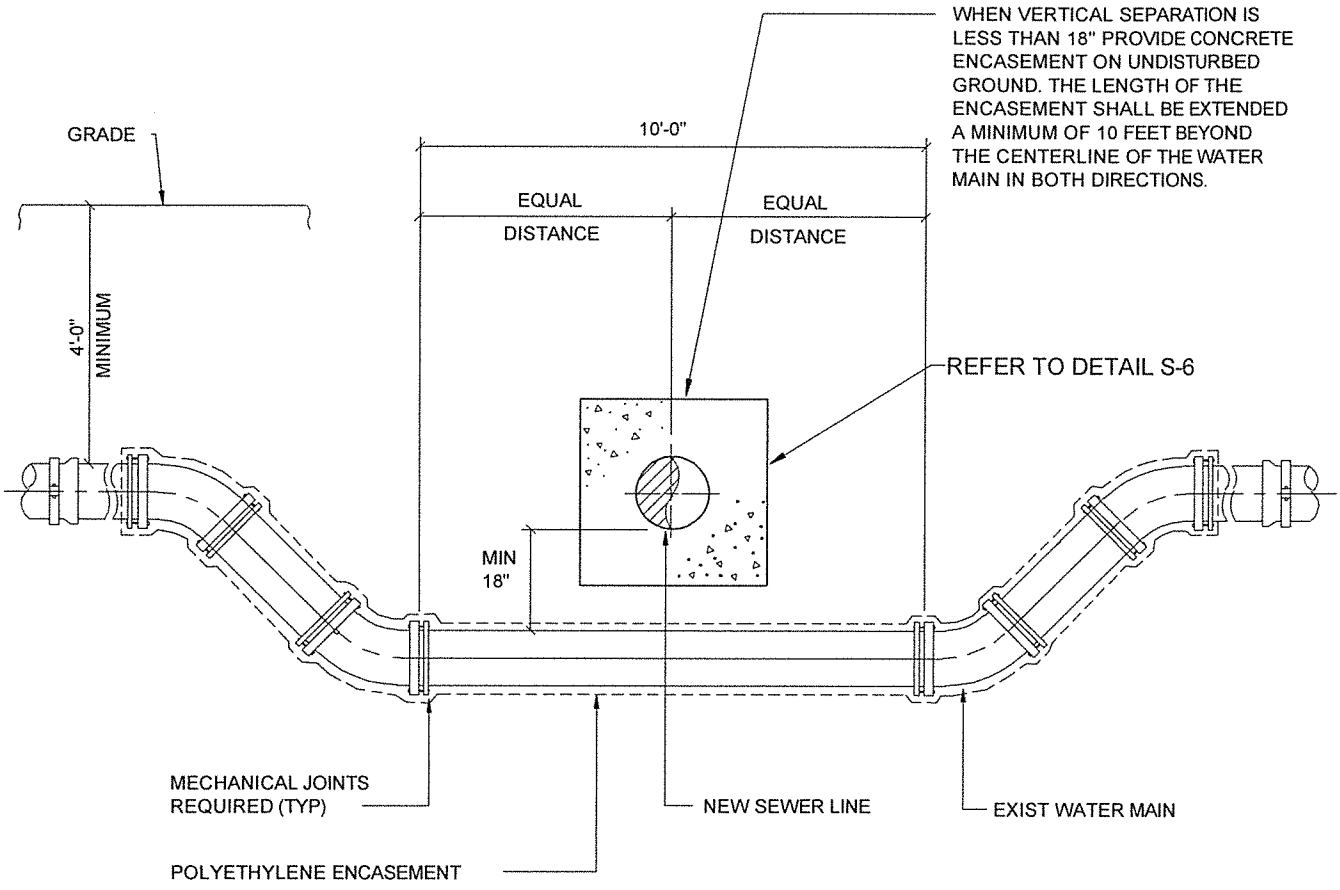

NOTE: ALL CONCRETE SHALL HAVE MINIMUM COMPRESSIVE STRENGTH OF 3000 PSI AT THE END OF 28 DAYS.

NEW SEWER LINE CROSSING OVER EXISTING WATER MAIN DETAIL

SCALE: NONE

Entech Engineering, Inc.
Engineering Architecture Construction
Corporate Office:
4 S. Fourth Street Reading, PA 19602
ph: 610.373.6667 fx: 610.373.7537

Pottsville, PA ph: 570.628.5655
Mountaintop, PA ph: 570.868.0275
Lititz, PA ph: 717.626.6666
www.entecheng.com 1.800.825.1372

FOSTER TOWNSHIP
NEW SEWER CROSSING OVER EXISTING WATER MAIN

PREPARED BY	CHECKED BY	APPROVED BY	PROJECT NO.	SCALE:	DATE:	DRAWING NO.
DYH	BAK	EJP	4147.18	NONE	6/13/12	S-8

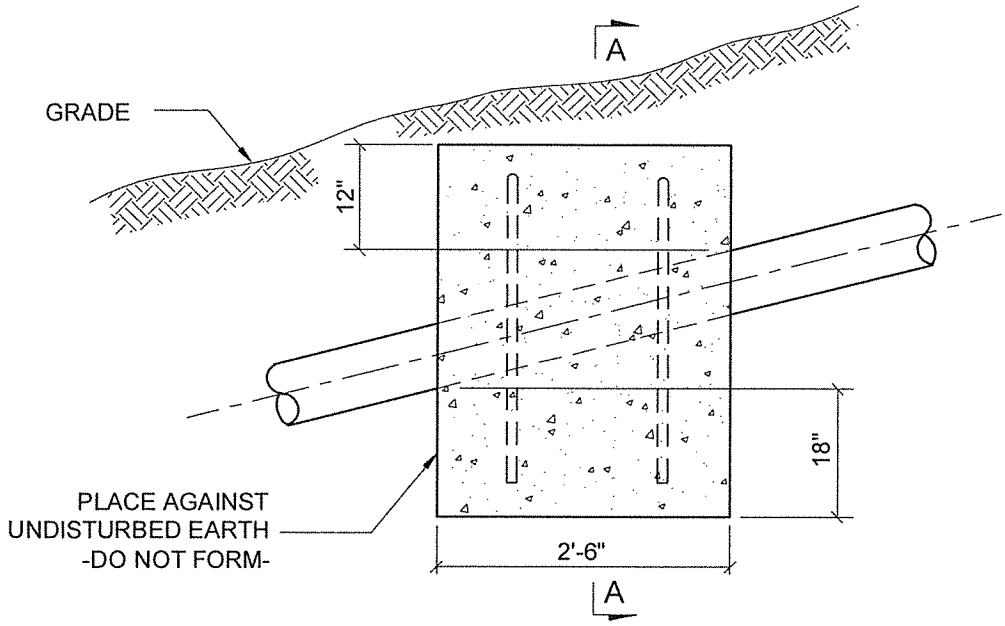

ELEVATION

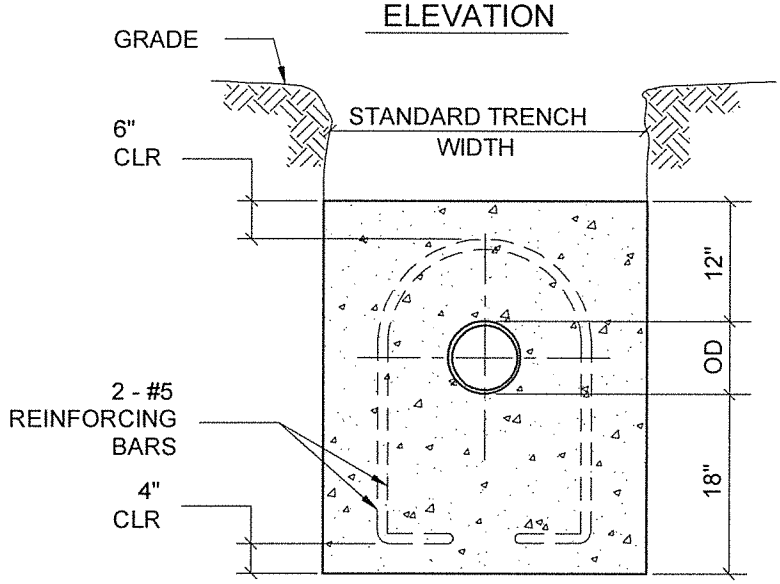

SECTION A-A

CONCRETE ANCHOR NOTES:

1. ANCHORS ARE NOT REQUIRED ON SLOPES LESS THAN 20% UNLESS NOTED ON DRAWINGS.
2. PROVIDE ANCHORS ON 36' CENTERS FOR SLOPES BETWEEN 20% TO 34%.
3. PROVIDE ANCHORS ON 24' CENTERS FOR SLOPES BETWEEN 35% TO 50%.
4. PROVIDE ANCHORS ON 16' CENTERS FOR SLOPES BETWEEN 51% TO 70%.
5. ALL CONCRETE SHALL HAVE MINIMUM COMPRESSIVE STRENGTH OF 3000 PSI AT THE END OF 28 DAYS.

CONCRETE ANCHORS - SLOPE BREAKERS

SCALE: NONE

Entech Engineering, Inc.
Engineering Architecture Construction
Corporate Office:
4 S. Fourth Street Reading, PA 19602
ph: 610.373.6667 fx: 610.373.7537

Pottsville, PA ph: 570.628.5655
Mountaintop, PA ph: 570.868.0275
Lititz, PA ph: 717.626.6666
www.entecheng.com 1.800.825.1372

FOSTER TOWNSHIP
CONCRETE ANCHORS - SLOPE BREAKERS

PREPARED BY	CHECKED BY	APPROVED BY	PROJECT NO.	SCALE:	DATE:	DRAWING NO.
DYH	BAK	EJP	4147.18	NONE	6/13/12	S-9

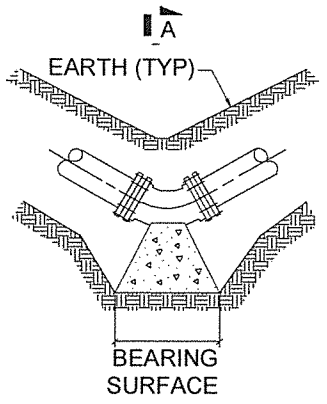

PLAN

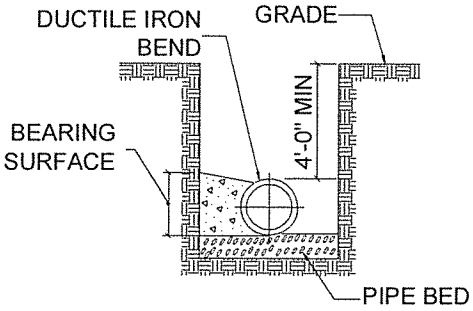

SECTION A-A

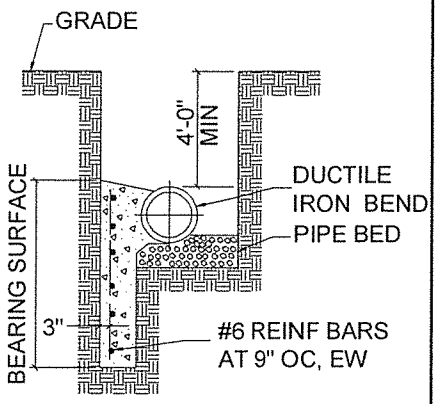

ALTERNATE SECTION A-A

THRUST BLOCKING FOR HORIZONTAL BENDS

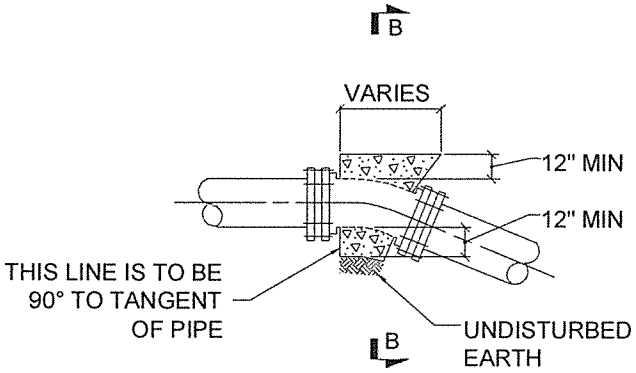

ELEVATION

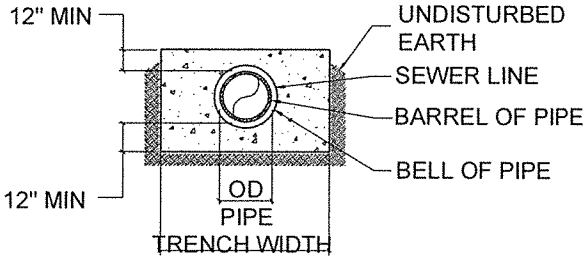

SECTION B-B

THRUST BLOCKING FOR VERTICAL BENDS

NOTES:
1. ALL CONCRETE SHALL HAVE A MINIMUM COMPRESSIVE STRENGTH OF 3000 PSI AT THE END OF 28 DAYS.
2. ALL REINFORCING STEEL SHALL BE DEFORMED BARS.
3. NO COUPLING OR JOINTS SHALL BE COVERED WITH CONCRETE.
4. INSTALL CONCRETE THRUST BLOCKS AT EACH ELBOW, TEE AND CAPPED END FITTINGS LOCATED IN THE HORIZONTAL PLANE.
5. HARNESS PIPE IF ORDERED BY BUILDER/DEVELOPER ENGINEER.
6. SIZE OF THRUST BLOCKS TO BE DETERMINED INDIVIDUALLY AT THE TIME OF CONSTRUCTION BY BUILDER/DEVELOPER ENGINEE R.

THRUST BLOCKING DETAILS

SCALE: NONE

ENTECH
Entech Engineering, Inc.
Engineering Architecture Construction
Corporate Office:
4 S. Fourth Street Reading, PA 19602
ph: 610.373.6667 fx: 610.373.7537
Pottsville, PA ph: 570.628.5655
Mountaintop, PA ph: 570.868.0275
Lititz, PA ph: 717.626.6666
www.entecheng.com 1.800.825.1372

FOSTER TOWNSHIP
THRUST BLOCKING DETAILS

PREPARED BY	CHECKED BY	APPROVED BY	PROJECT NO.	SCALE:	DATE:	DRAWING NO.
DYH	BAK	EJP	4147.18	NONE	6/13/12	S-10

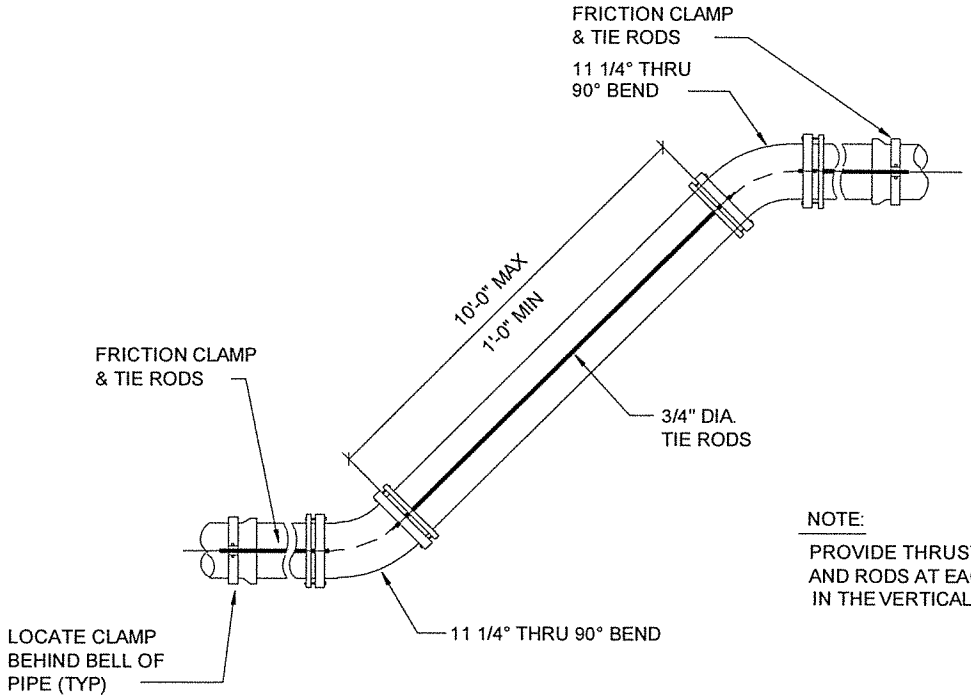

NOTE:

PROVIDE THRUST CLAMPS WITH LUGS AND RODS AT EACH ELBOW LOCATED IN THE VERTICAL PLANE.

THRUST CLAMPING DETAIL

SCALE: NONE

Entech Engineering, Inc.
Engineering Architecture Construction
Corporate Office:
4 S. Fourth Street Reading, PA 19602
ph: 610.373.6667 fx: 610.373.7537

Pottsville, PA ph: 570.628.5655
Mountaintop, PA ph: 570.868.0275
Lititz, PA ph: 717.626.6666
www.entecheng.com 1.800.825.1372

FOSTER TOWNSHIP
THRUST CLAMPING DETAIL

PREPARED BY	CHECKED BY	APPROVED BY	PROJECT NO.	SCALE:	DATE:	DRAWING NO.
DYH	BAK	EJP	4147.18	NONE	6/13/12	S-11

REQUIRED SPACING AND MATERIALS FOR TRENCH PLUGS		
TRENCH SLOPE (%)	SPACING (FT)	PLUG MATERIAL
< 5	*	*
5-15	500	** EARTH FILLED SACKS
15-25	300	** EARTH FILLED SACKS
25-35	200	** EARTH FILLED SACKS
35-100	100	** EARTH FILLED SACKS
> 100	50	CEMENT FILLED BAGS (WETTED) OR MORTARED STONE

* TRENCH PLUGS ARE REQUIRED AT ALL STREAM, RIVER, OR WATER-BODY CROSSINGS REGARDLESS OF TRENCH SLOPE. OTHERWISE NOT REQUIRED.

** TOPSOIL MAY NOT BE USED TO FILL SACKS.

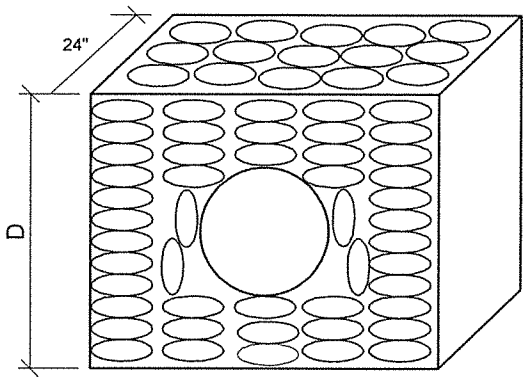

D = DEPTH TO BOTTOM OF TRENCH

SECTION VIEW

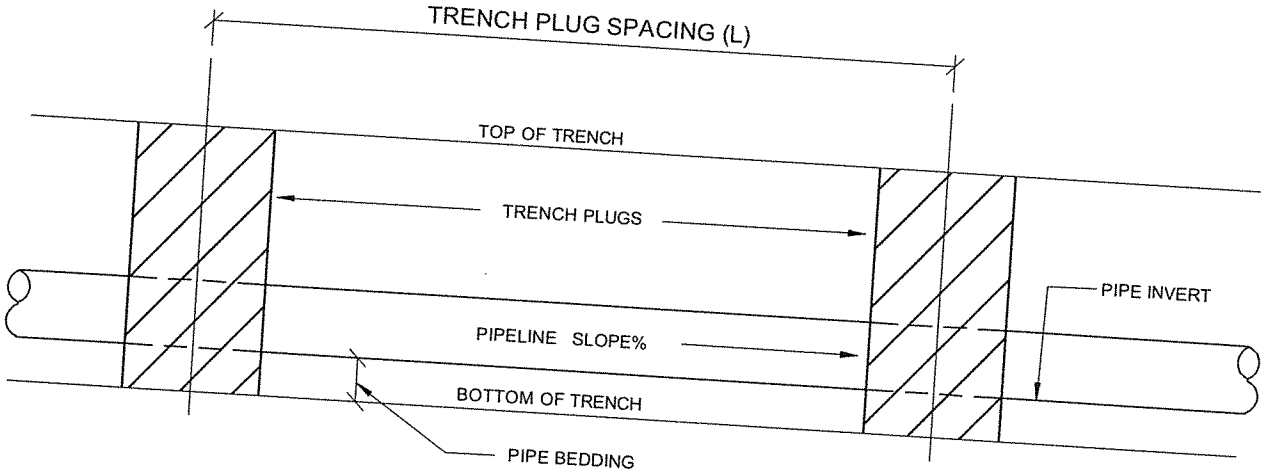

ELEVATION

TRENCH PLUG DETAIL

SCALE: NONE

Entech Engineering, Inc.
Engineering Architecture Construction
Corporate Office:
4 S. Fourth Street Reading, PA 19602
ph: 610.373.6667 fx: 610.373.7537

Pottsville, PA ph: 570.628.5655
Mountaintop, PA ph: 570.868.0275
Lititz, PA ph: 717.626.6666
www.entecheng.com 1.800.825.1372

FOSTER TOWNSHIP
TRENCH PLUG DETAIL

PREPARED BY	CHECKED BY	APPROVED BY	PROJECT NO.	SCALE:	DATE:	DRAWING NO.
MBD	BAK	EJP	4147.18	NONE	6/13/12	S-12

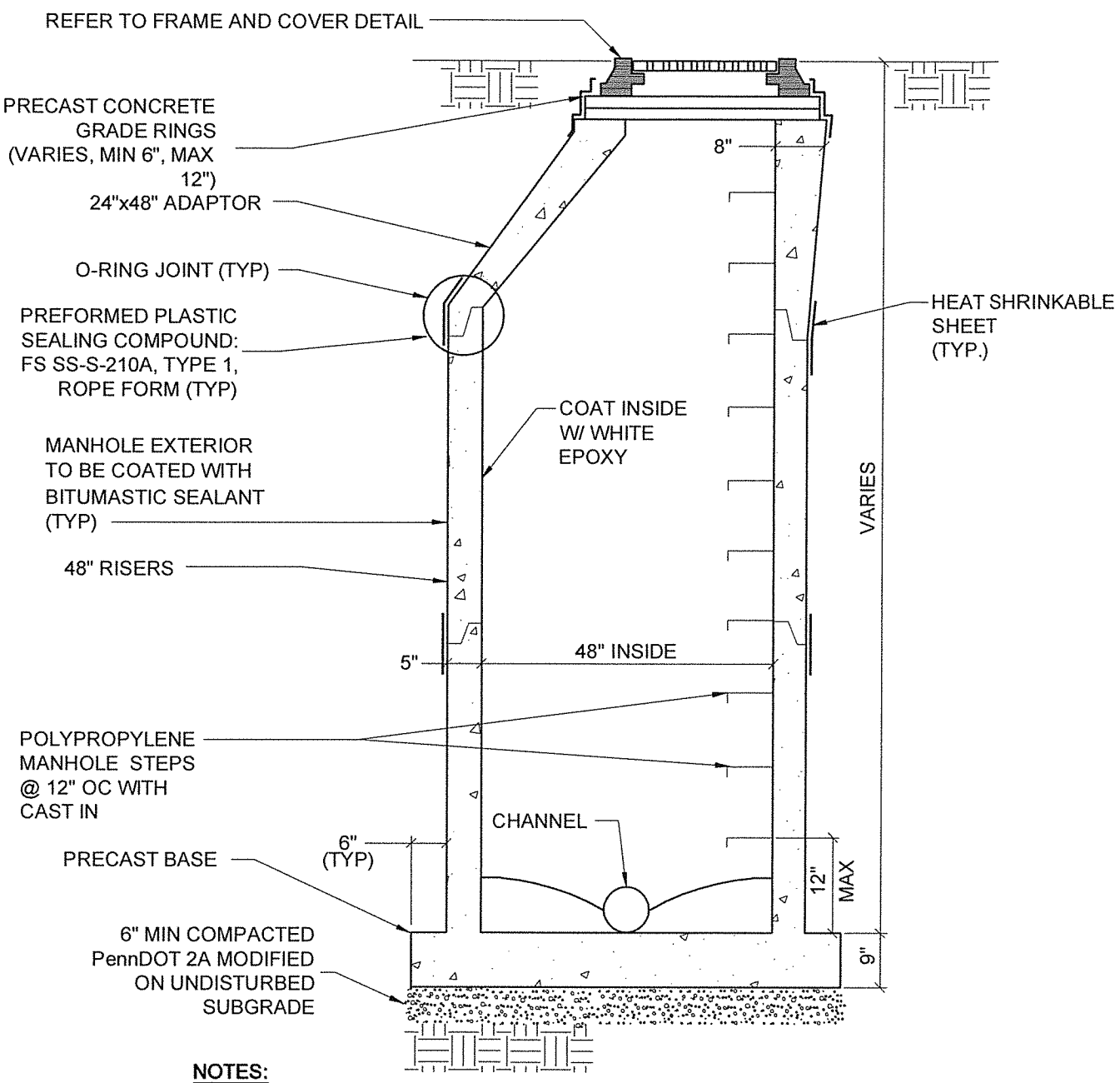

NOTES:

1. ALL PIPE TO MANHOLE CONNECTIONS SHALL BE MADE WITH A CAST-IN-PLACE GASKET. (TYP) (A-LOK OR APPROVED EQUAL)
2. MANHOLES EXCEEDING A DEPTH OF 16 FEET SHALL PROVIDE PRE-CAST LANDING PLATFORM.

TYPICAL MANHOLE DETAIL

SCALE: NONE

Entech Engineering, Inc.
Engineering Architecture Construction
Corporate Office:
4 S. Fourth Street Reading, PA 19602
ph: 610.373.6667 fx: 610.373.7537
Pottsville, PA ph: 570.628.5655
Mountaintop, PA ph: 570.868.0275
Lititz, PA ph: 717.626.6666
www.entecheng.com 1.800.825.1372

FOSTER TOWNSHIP
TYPICAL MANHOLE DETAIL

PREPARED BY	CHECKED BY	APPROVED BY	PROJECT NO.	SCALE:	DATE:	DRAWING NO.
DYH	BAK	EJP	4147.18	NONE	6/13/12	S-13

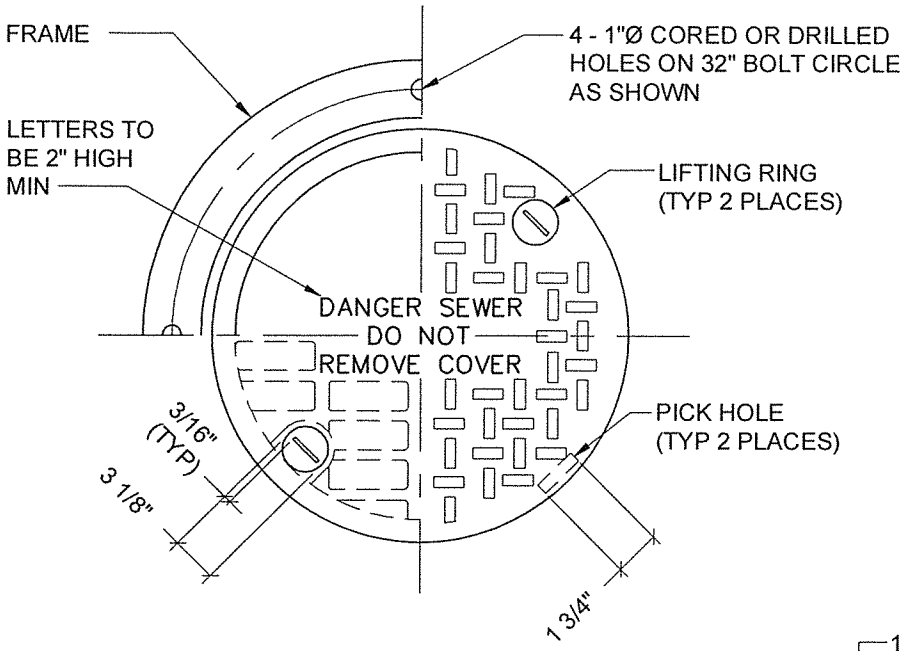

PLAN

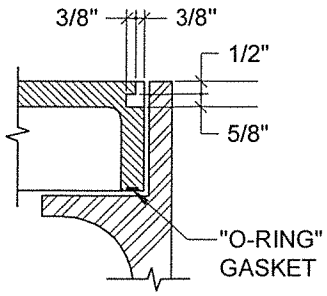

PICK HOLE DETAIL

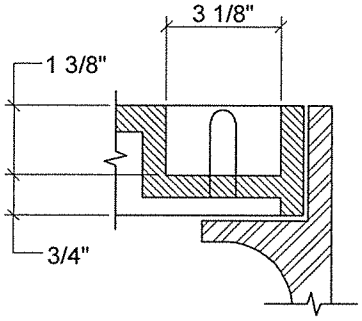

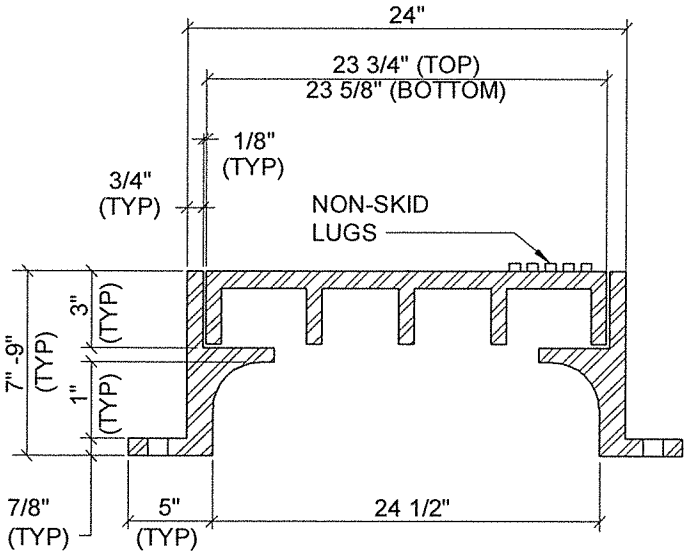

SECTION

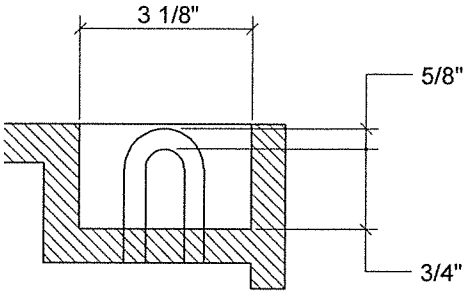

LIFT RING DETAILS

NOTE: APPROXIMATE WEIGHT 500#

CAST IRON REGULAR MANHOLE FRAME & COVER

SCALE: NONE

Entech Engineering, Inc.
Engineering Architecture Construction
Corporate Office:
4 S. Fourth Street Reading, PA 19602
ph: 610.373.6667 fx: 610.373.7537

Pottsville, PA ph: 570.628.5655
Mountaintop, PA ph: 570.868.0275
Lititz, PA ph: 717.626.6666
www.entecheng.com 1.800.825.1372

FOSTER TOWNSHIP
CAST IRON MANHOLE & COVER

PREPARED BY	CHECKED BY	APPROVED BY	PROJECT NO.	SCALE:	DATE:	DRAWING NO.
DYH	BAK	EJP	4147.18	NONE	6/13/12	S-14

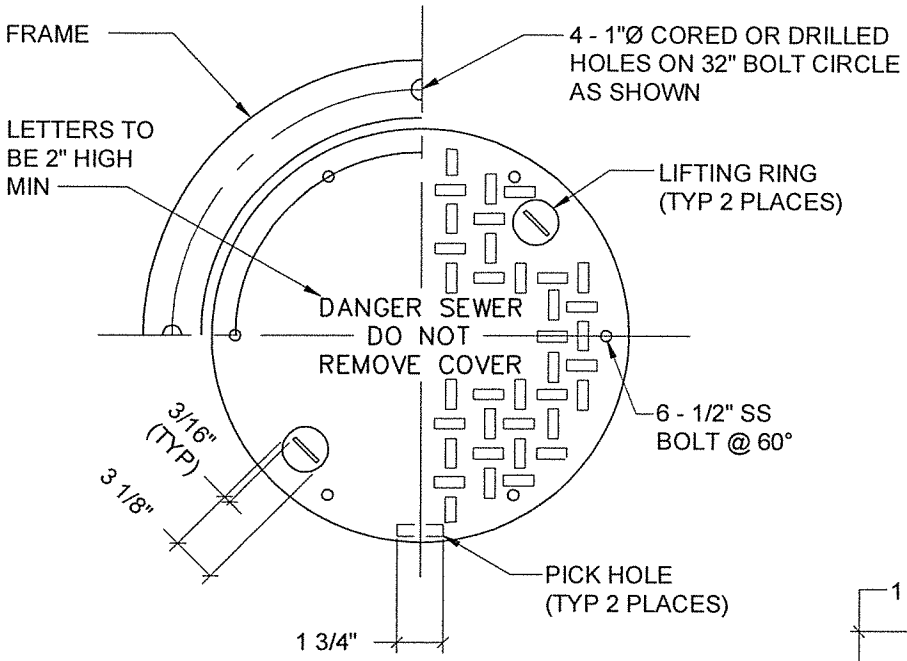

PLAN

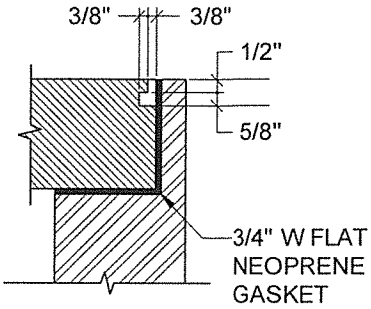

PICK HOLE DETAIL

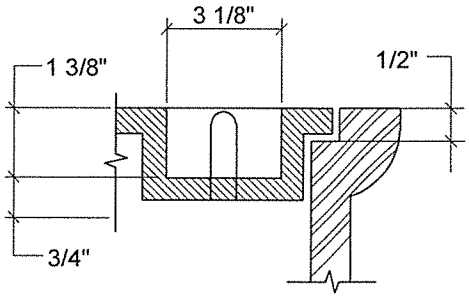

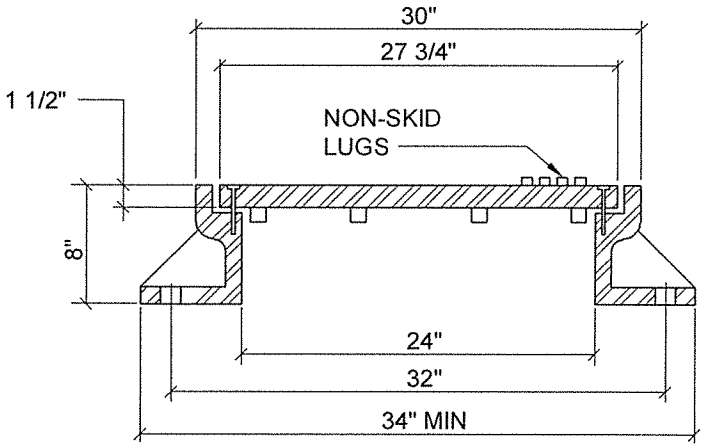

SECTION

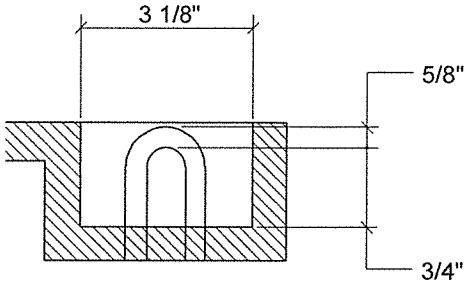

LIFT RING DETAILS

NOTES: CASTING TO BE SUPPLIED WITH BOLTED COVER AND MACHINED BEARING SURFACE.

BRIDGESTATE FOUNDARY CO, HADDONFIELD, NJ (PATTERN NO 1502 - TYPE "A" MODIFIED OR APPROVED EQUAL.

APPROXIMATE WEIGHT 500#

CAST IRON WATERTIGHT MANHOLE FRAME & COVER

SCALE: NONE

Entech Engineering, Inc.
Engineering Architecture Construction
Corporate Office:
4 S. Fourth Street Reading, PA 19602
ph: 610.373.6667 fx: 610.373.7537

Pottsville, PA ph: 570.628.5655
Mountaintop, PA ph: 570.868.0275
Lititz, PA ph: 717.626.6666
www.entecheng.com 1.800.825.1372

FOSTER TOWNSHIP
CAST IRON WATERTIGHT MANHOLE FRAME & COVER

PREPARED BY	CHECKED BY	APPROVED BY	PROJECT NO.	SCALE:	DATE:	DRAWING NO.
DYH	BAK	EJP	4147.18	NONE	6/13/12	S-15

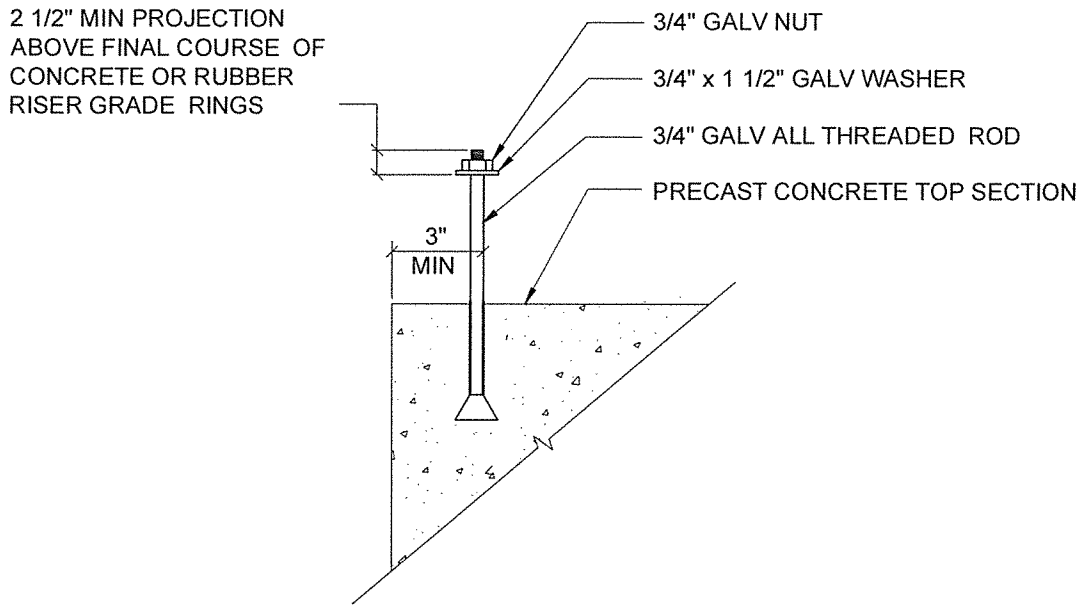

NOTE: FOUR (4) BOLTS REQUIRED PER MANHOLE.

MANHOLE FRAME - ANCHOR BOLT DETAIL

SCALE: NONE

Entech Engineering, Inc.
Engineering Architecture Construction
Corporate Office:
4 S. Fourth Street Reading, PA 19602
ph: 610.373.6667 fx: 610.373.7537

Pottsville, PA ph: 570.628.5655
Mountaintop, PA ph: 570.868.0275
Lititz, PA ph: 717.626.6666
www.entecheng.com 1.800.825.1372

FOSTER TOWNSHIP
MANHOLE FRAME - ANCHOR BOLT

PREPARED BY	CHECKED BY	APPROVED BY	PROJECT NO.	SCALE:	DATE:	DRAWING NO.
DYH	BAK	EJP	4147.18	NONE	6/13/12	S-16

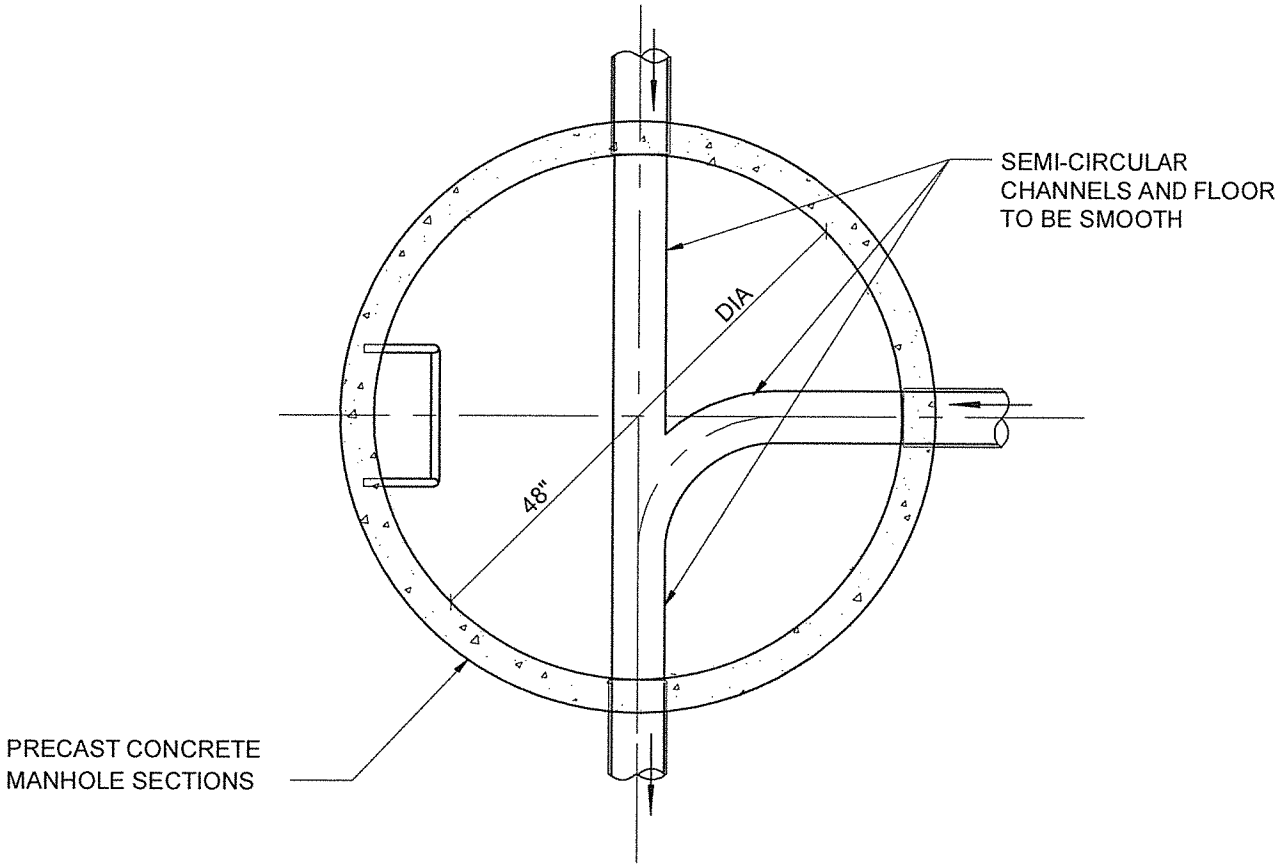

NOTE:

1. ALL FLOW CHANNELS SHALL BE PRE-CAST BY MANUFACTURER UNLESS AUTHORIZED BY ENGINEER/TOWNSHIP

MANHOLE BASE
TYPICAL CHANNEL CONFIGURATION

SCALE: NONE

Entech Engineering, Inc.
Engineering Architecture Construction
Corporate Office:
4 S. Fourth Street Reading, PA 19602
ph: 610.373.6667 fx: 610.373.7537

Pottsville, PA ph: 570.628.5655
Mountaintop, PA ph: 570.868.0275
Lititz, PA ph: 717.626.6666
www.entecheng.com 1.800.825.1372

FOSTER TOWNSHIP
MANHOLE BASE TYPICAL CHANNEL CONFIGURATION

PREPARED BY	CHECKED BY	APPROVED BY	PROJECT NO.	SCALE:	DATE:	DRAWING NO.
DYH	BAK	EJP	4147.18	NONE	6/13/12	S-17

U-SHAPED COLLAR

NOT TO SCALE

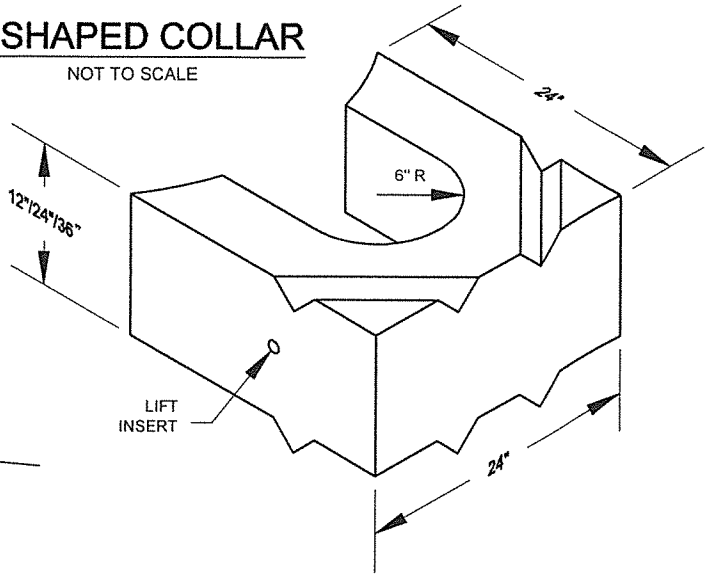

CROSS-SECTION OF DROP MANHOLE

NOT TO SCALE

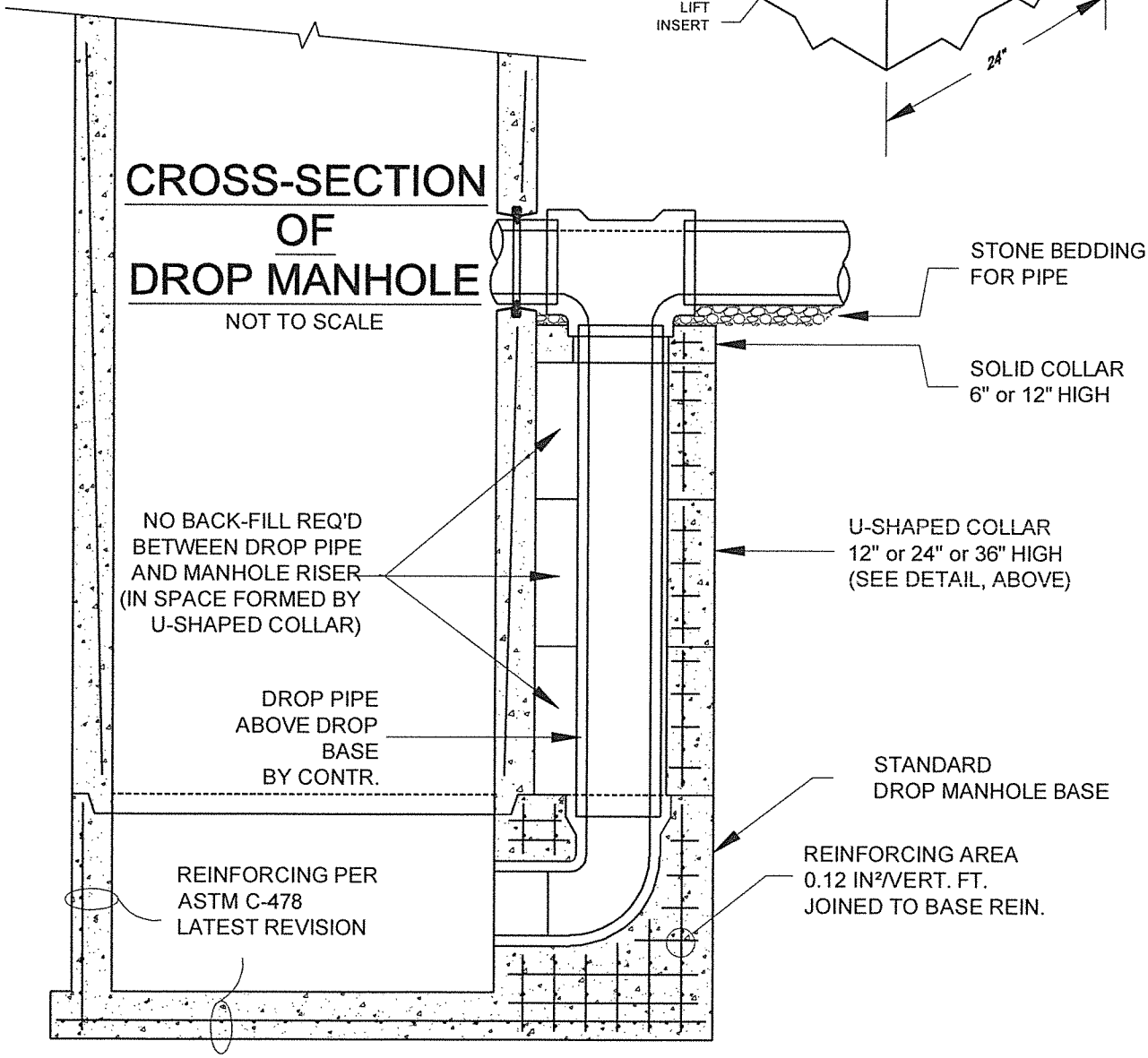

TYPICAL OUTSIDE DROP MANHOLE DETAIL

SCALE: NONE

Entech Engineering, Inc.
Engineering Architecture Construction
Corporate Office:
4 S. Fourth Street Reading, PA 19602
ph: 610.373.6667 fx: 610.373.7537

Pottsville, PA ph: 570.628.5655
Mountaintop, PA ph: 570.868.0275
Lititz, PA ph: 717.626.6666
www.entecheng.com 1.800.825.1372

FOSTER TOWNSHIP
TYPICAL OUTSIDE DROP MANHOLE DETAIL

PREPARED BY	CHECKED BY	APPROVED BY	PROJECT NO.	SCALE:	DATE:	DRAWING NO.
MBD	BAK	EJP	4147.18	NONE	6/13/12	S-18

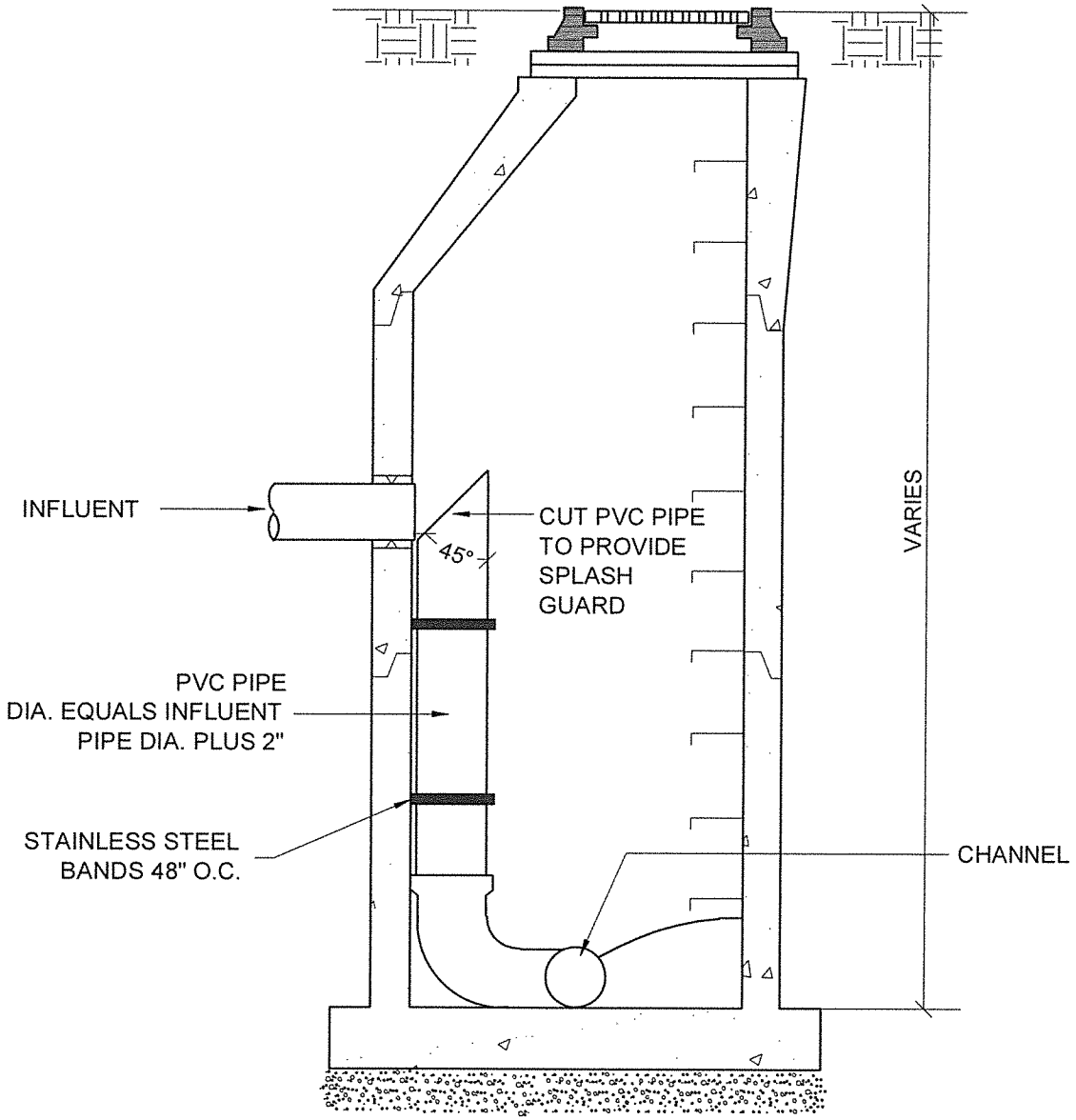

TYPICAL INSIDE DROP MANHOLE DETAIL

SCALE: NONE

Entech Engineering, Inc.
Engineering Architecture Construction
Corporate Office:
4 S. Fourth Street Reading, PA 19602
ph: 610.373.6667 fx: 610.373.7537

Pottsville, PA ph: 570.628.5655
Mountaintop, PA ph: 570.868.0275
Lititz, PA ph: 717.626.6666
www.entecheng.com 1.800.825.1372

FOSTER TOWNSHIP
TYPICAL INSIDE DROP MANHOLE DETAIL

PREPARED BY	CHECKED BY	APPROVED BY	PROJECT NO.	SCALE:	DATE:	DRAWING NO.
MBD	BAK	EJP	4147.18	NONE	6/13/12	S-19

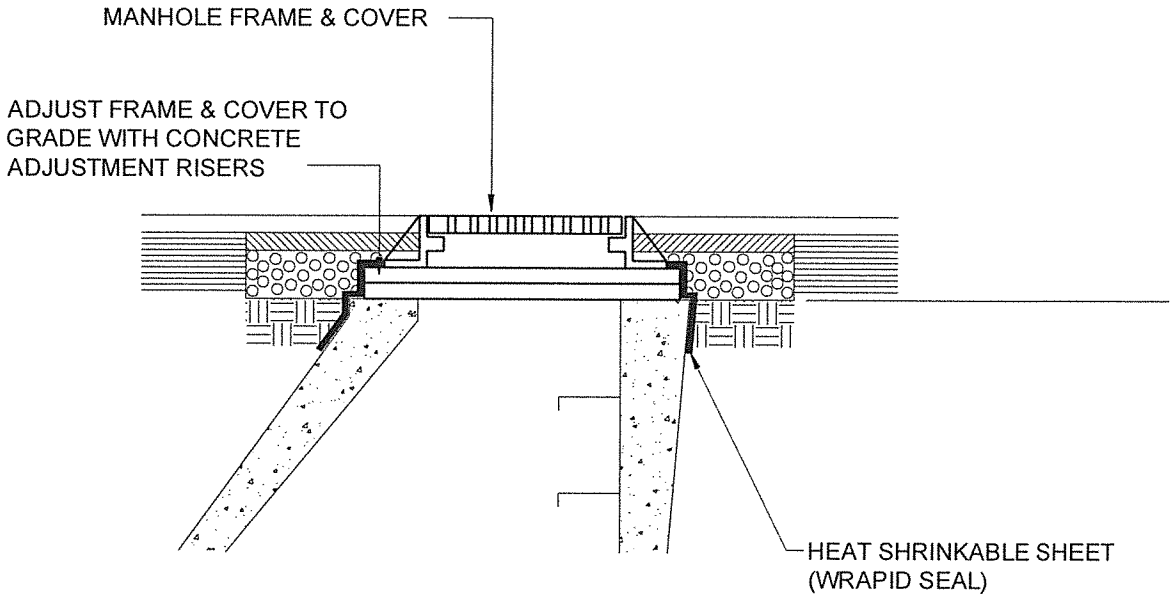

MANHOLE FRAME AND COVER ADJUSTMENT DETAIL

SCALE: NONE

Entech Engineering, Inc.
Engineering Architecture Construction
Corporate Office:
4 S. Fourth Street Reading, PA 19602
ph: 610.373.6667 fx: 610.373.7537

Pottsville, PA ph: 570.628.5655
Mountaintop, PA ph: 570.868.0275
Lititz, PA ph: 717.626.6666
www.entecheng.com 1.800.825.1372

FOSTER TOWNSHIP
MANHOLE FRAME AND COVER ADJUSTMENT DETAIL

PREPARED BY	CHECKED BY	APPROVED BY	PROJECT NO.	DATE:	DRAWING NO.
DYH	BAK	EJP	4147.18	6/13/12	S-20
				SCALE: NONE	

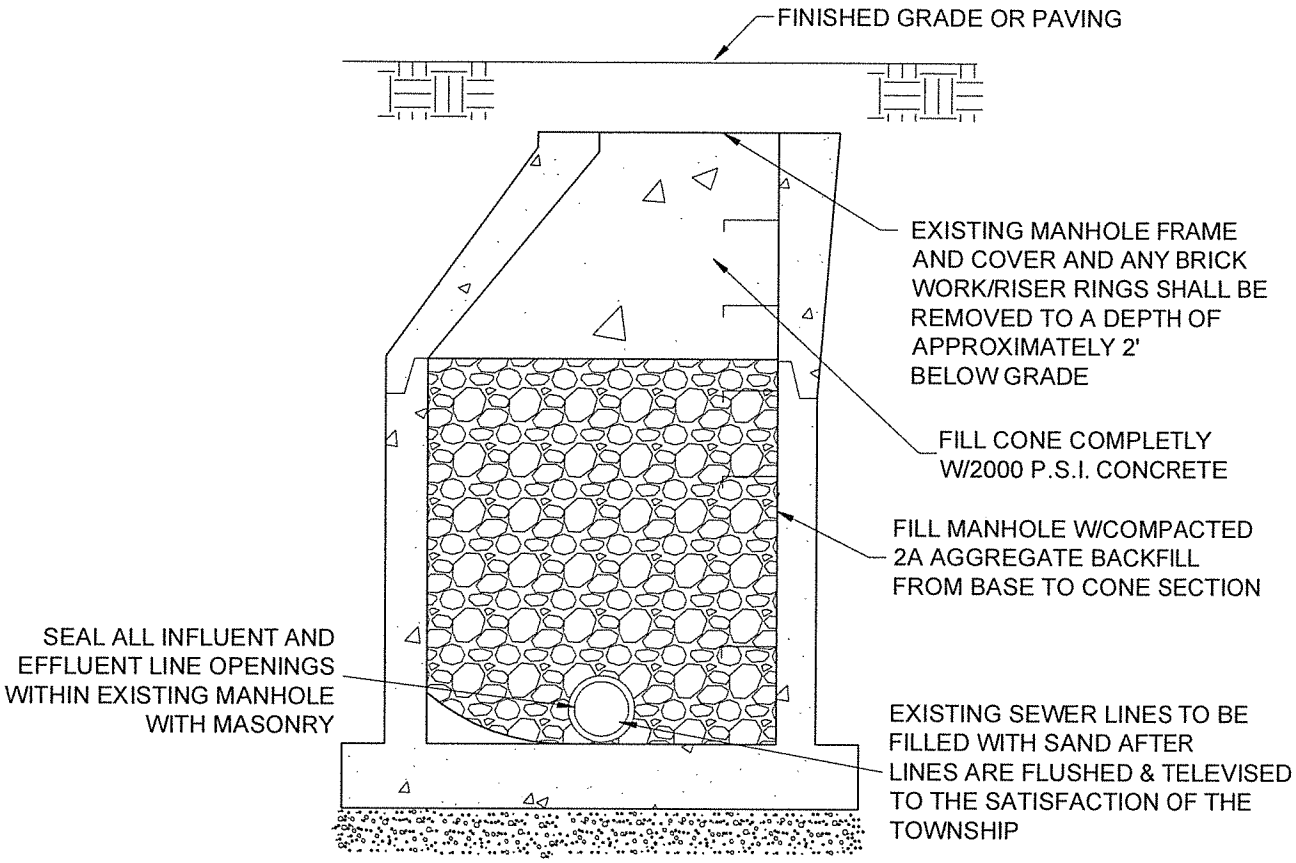

MANHOLE ABANDONMENT DETAIL

SCALE: NONE

Entech Engineering, Inc.
Engineering Architecture Construction
Corporate Office:
4 S. Fourth Street Reading, PA 19602
ph: 610.373.6667 fx: 610.373.7537

Pottsville, PA ph: 570.628.5655
Mountaintop, PA ph: 570.868.0275
Lititz, PA ph: 717.626.6666
www.entecheng.com 1.800.825.1372

FOSTER TOWNSHIP
MANHOLE ABANDONMENT DETAIL

PREPARED BY	CHECKED BY	APPROVED BY	PROJECT NO.	DATE:	DRAWING NO.
MBD	BAK	EJP	4147.18	6/13/12	S-21
				SCALE: NONE	

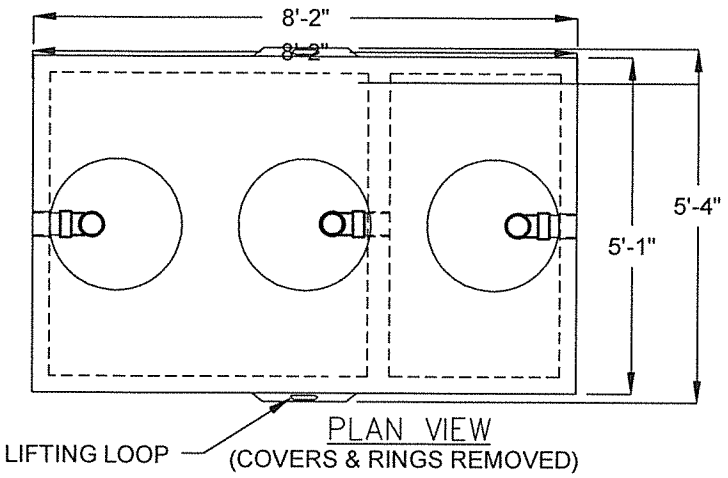

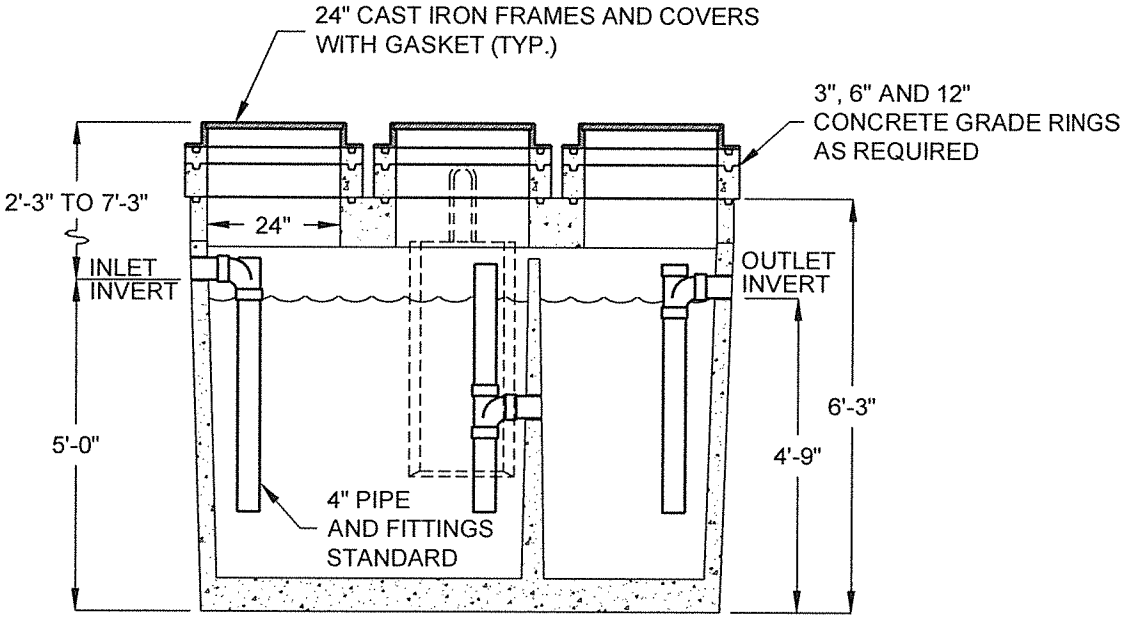

ELEVATION VIEW

NOTES:

1. DETAIL DEPICTS A 1,000 GALLON OPERATING CAPACITY GREASE INTERCEPTOR. THE ACTUAL TYPE AND CAPACITY MUST BE DETERMINED BY OWNER AND APPROVED BY TOWNSHIP.
2. DESIGN LOAD: H-20 TRAFFIC WITH DRY SOIL CONDITIONS (WATER LEVEL BELOW TANK) AND 1'-6' EARTH COVER.
3. SUITABLE SUB-BASE BEDDED WITH GRANULAR MATERIAL SHALL BE PREPARED TO HANDLE ANTICIPATED LOADS.
4. FOR KITCHEN USE ONLY NOT TO BE USED WITH SEWAGE SYSTEM.
5. INTERCEPTOR TO CONTAIN WATER TIGHT JOINTS.

1000 GALLON GREASE INTERCEPTOR

SCALE: NONE

ENTECH
Entech Engineering, Inc.
Engineering Architecture Construction
Corporate Office:
4 S. Fourth Street Reading, PA 19602
ph: 610.373.6667 fx: 610.373.7537
Pottsville, PA ph: 570.628.5655
Mountaintop, PA ph: 570.868.0275
Lititz, PA ph: 717.626.6666
www.entecheng.com 1.800.825.1372

FOSTER TOWNSHIP
1000 GALLON GREASE INTERCEPTOR

PREPARED BY	CHECKED BY	APPROVED BY	PROJECT NO.	SCALE:	DATE:	DRAWING NO.
MBD	BAK	EJP	4147.18	NONE	6/13/12	S-22

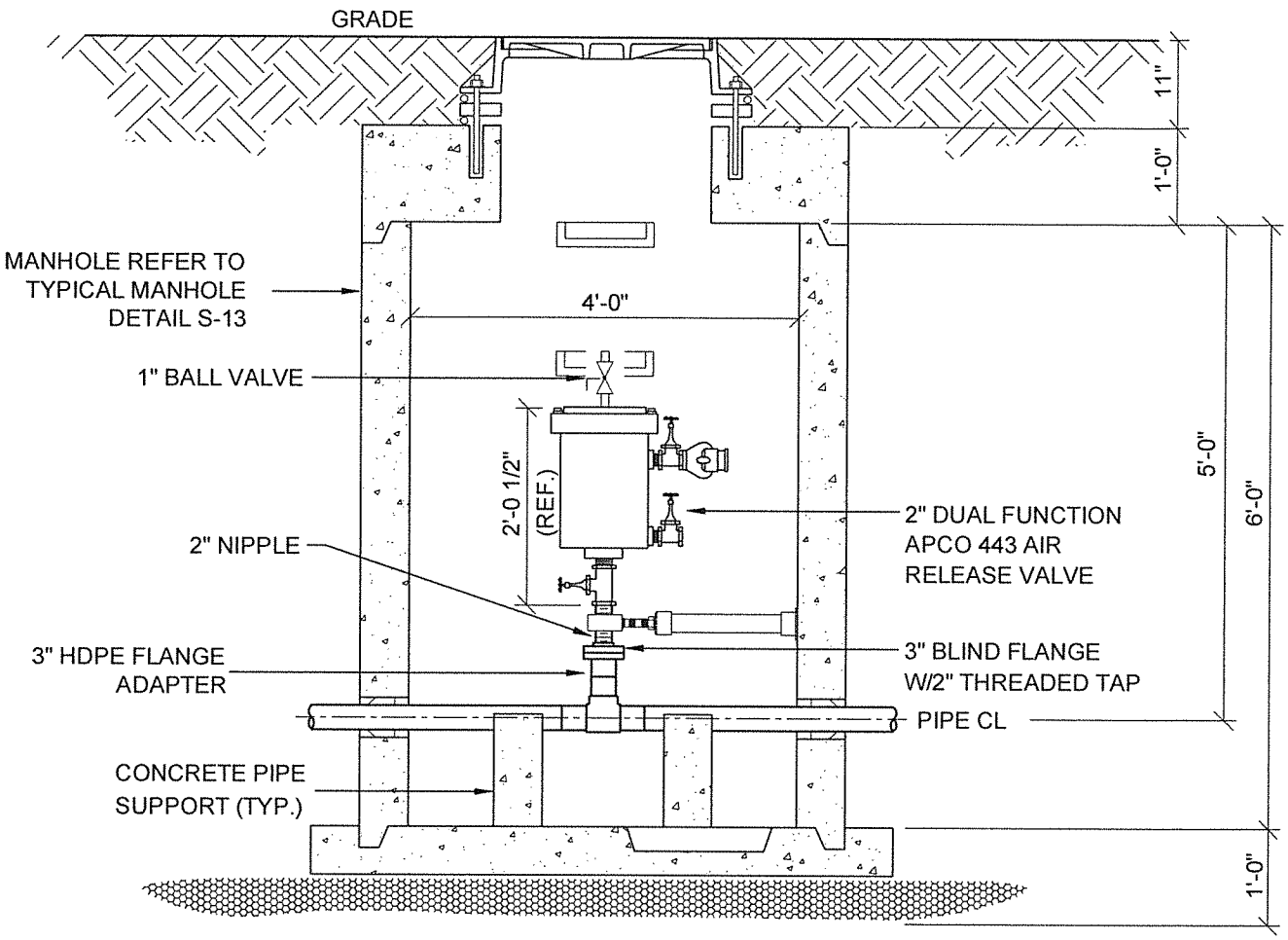

AIR RELEASE VALVE MANHOLE

SCALE: NONE

Entech Engineering, Inc.
Engineering Architecture Construction
Corporate Office:
4 S. Fourth Street Reading, PA 19602
ph: 610.373.6667 fx: 610.373.7537

Pottsville, PA ph: 570.628.5655
Mountaintop, PA ph: 570.868.0275
Lititz, PA ph: 717.626.6666
www.entecheng.com 1.800.825.1372

FOSTER TOWNSHIP
AIR RELEASE VALVE MANHOLE

PREPARED BY	CHECKED BY	APPROVED BY	PROJECT NO.	SCALE:	DATE:	DRAWING NO.
MBD	BAK	EJP	4147.18	NONE	6/13/12	S-23

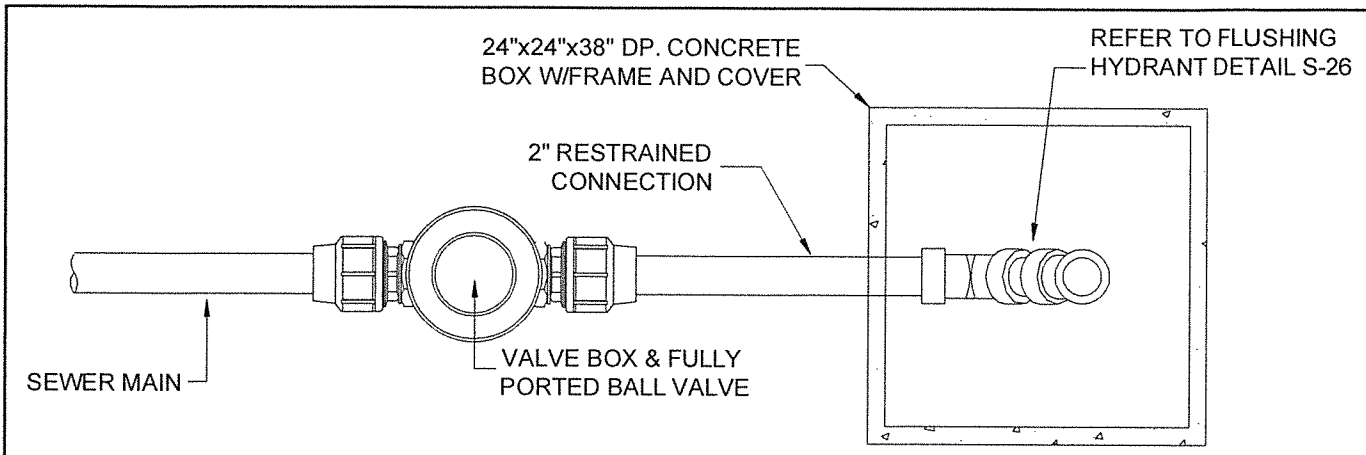

PLAN VIEW

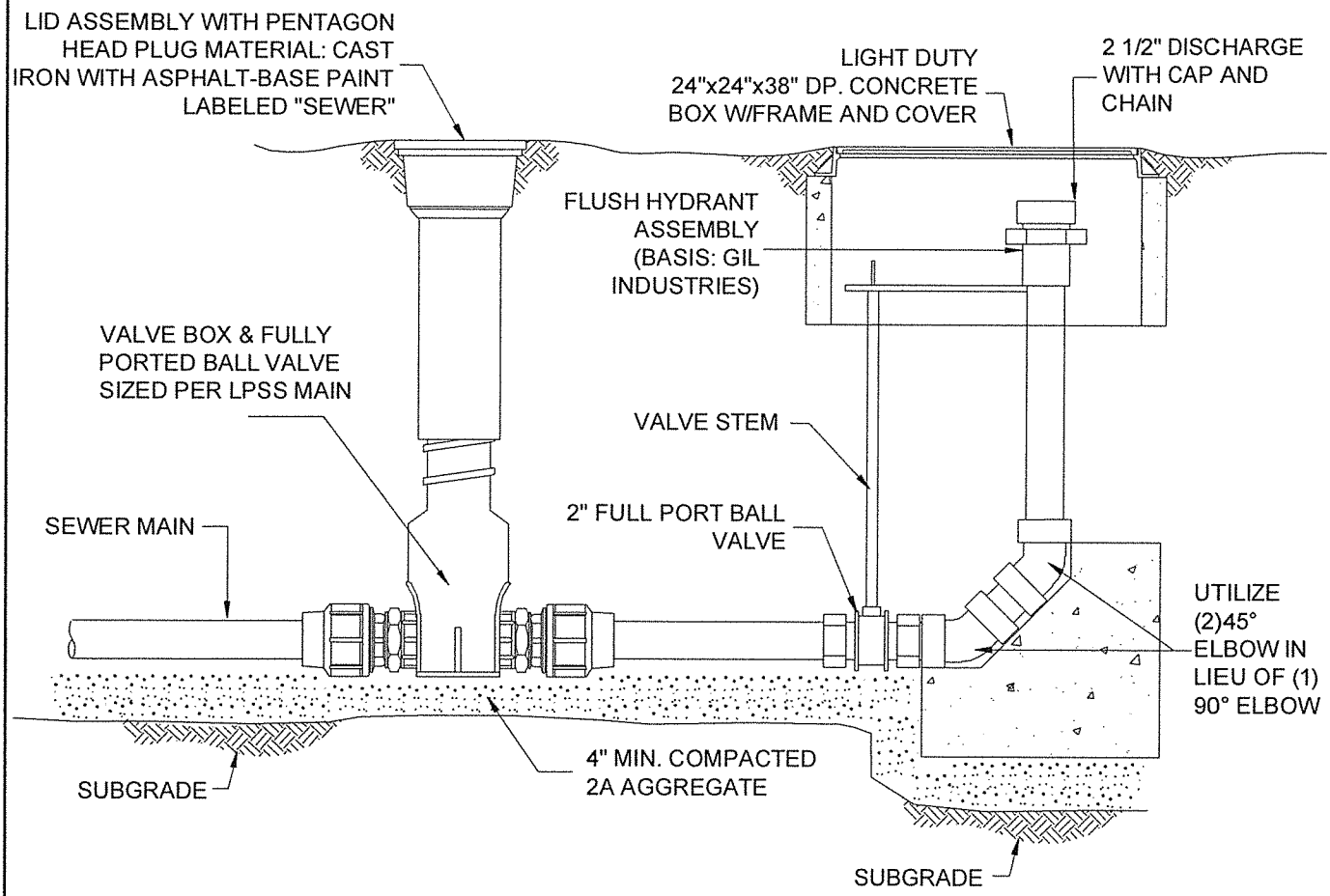

ELEVATION VIEW

TERMINAL CLEANOUT ASSEMBLY

SCALE: NONE

Entech Engineering, Inc.
Engineering Architecture Construction
Corporate Office:
4 S. Fourth Street Reading, PA 19602
ph: 610.373.6667 fx: 610.373.7537
Pottsville, PA ph: 570.628.5655
Mountaintop, PA ph: 570.868.0275
Lititz, PA ph: 717.626.6666
www.entecheng.com 1.800.825.1372

FOSTER TOWNSHIP
TERMINAL CLEANOUT ASSEMBLY

PREPARED BY	CHECKED BY	APPROVED BY	PROJECT NO.	SCALE:	DATE:	DRAWING NO.
MBD	BAK	EJP	4147.18	NONE	6/13/12	S-24

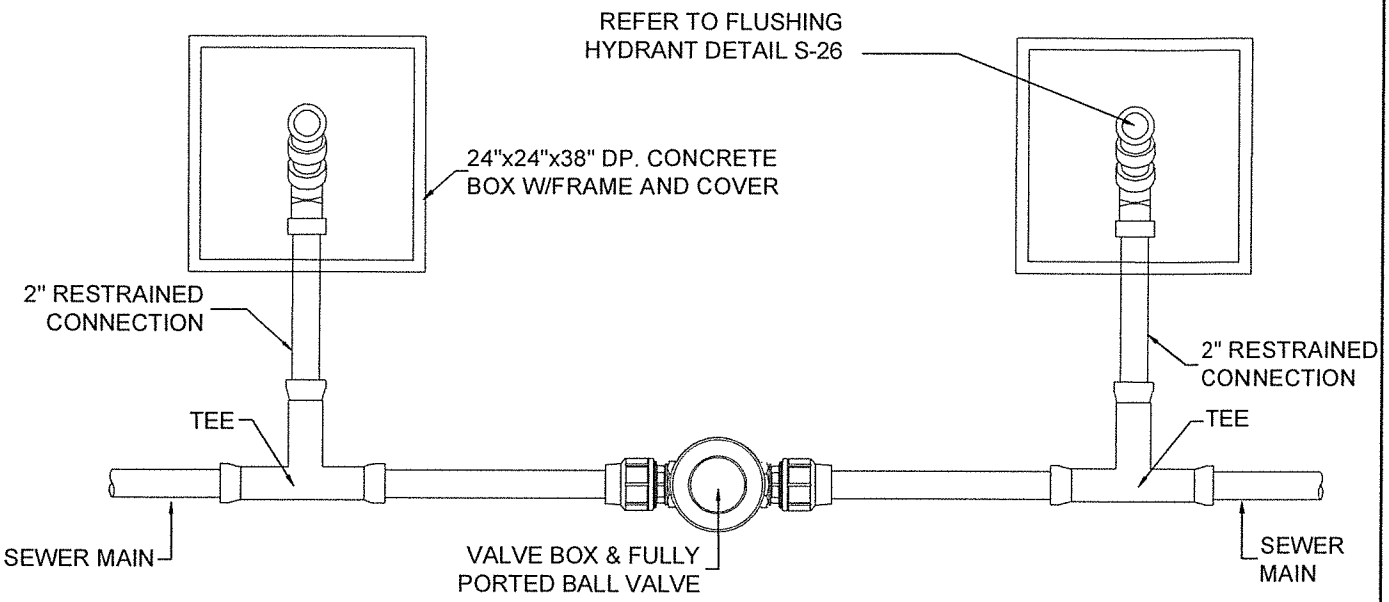

PLAN VIEW

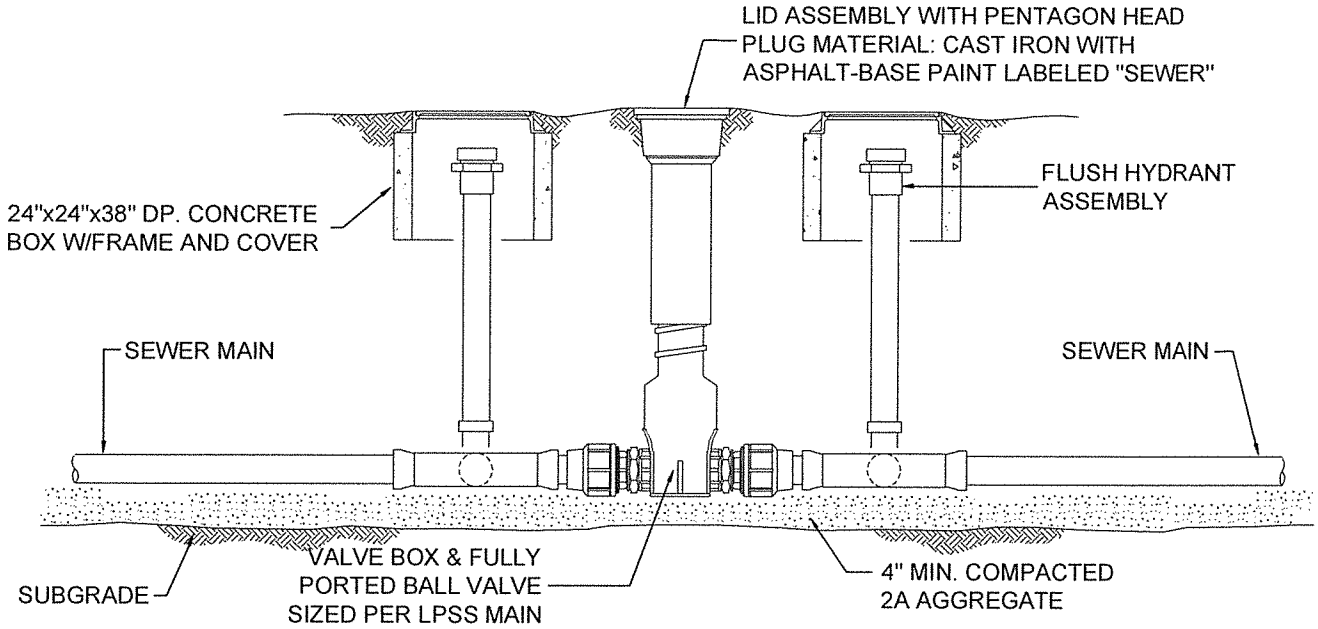

ELEVATION VIEW

INTERMEDIATE CLEANOUT ASSEMBLY

SCALE: NONE

Entech Engineering, Inc.
Engineering Architecture Construction
Corporate Office:
4 S. Fourth Street Reading, PA 19602
ph: 610.373.6667 fx: 610.373.7537

Pottsville, PA ph: 570.628.5655
Mountaintop, PA ph: 570.868.0275
Lititz, PA ph: 717.626.6666
www.entecheng.com 1.800.825.1372

FOSTER TOWNSHIP
INTERMEDIATE CLEANOUT ASSEMBLY

PREPARED BY	CHECKED BY	APPROVED BY	PROJECT NO.	SCALE:	DATE:	DRAWING NO.
MBD	BAK	EJP	4147.18	NONE	6/13/12	S-25

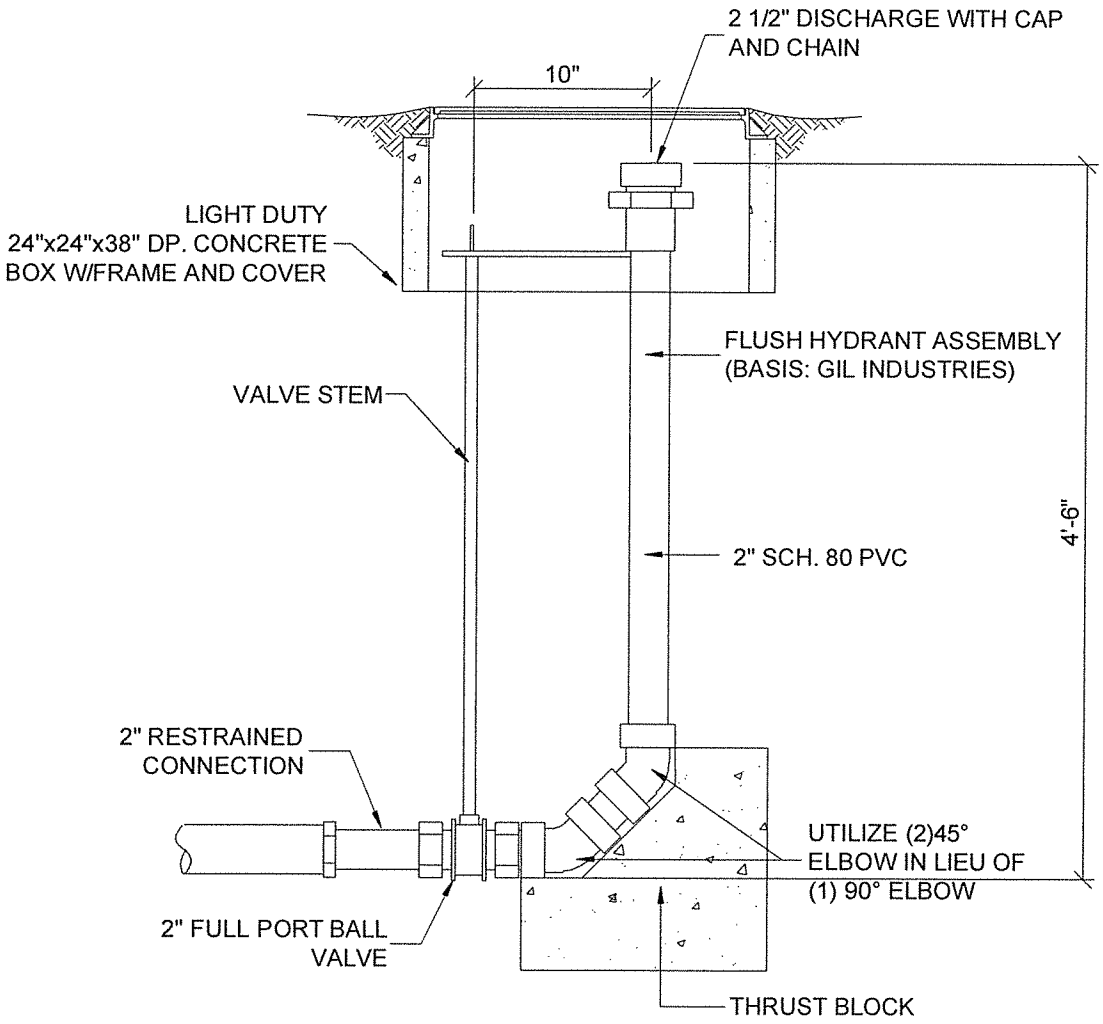

FLUSHING HYDRANT DETAIL

SCALE: NONE

Entech Engineering, Inc.
Engineering Architecture Construction
Corporate Office:
4 S. Fourth Street Reading, PA 19602
ph: 610.373.6667 fx: 610.373.7537

Pottsville, PA ph: 570.628.5655
Mountaintop, PA ph: 570.868.0275
Lititz, PA ph: 717.626.6666
www.entecheng.com 1.800.825.1372

FOSTER TOWNSHIP
FLUSHING HYDRANT DETAIL

PREPARED BY	CHECKED BY	APPROVED BY	PROJECT NO.	SCALE:	DATE:	DRAWING NO.
MBD	BAK	EJP	4147.18	NONE	6/13/12	S-26

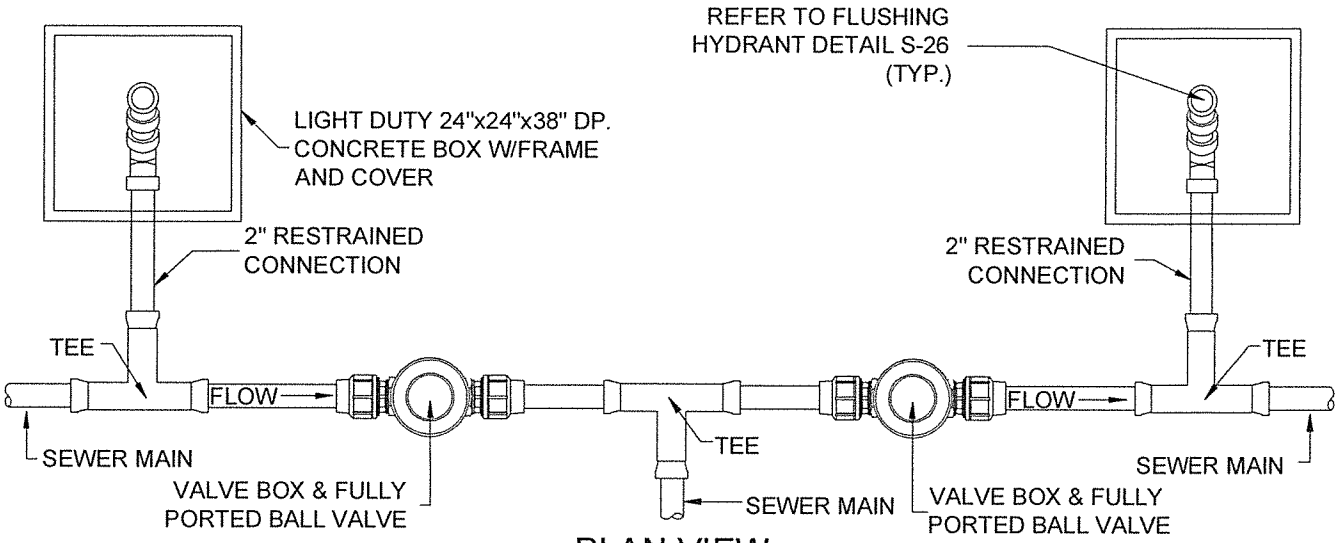

PLAN VIEW

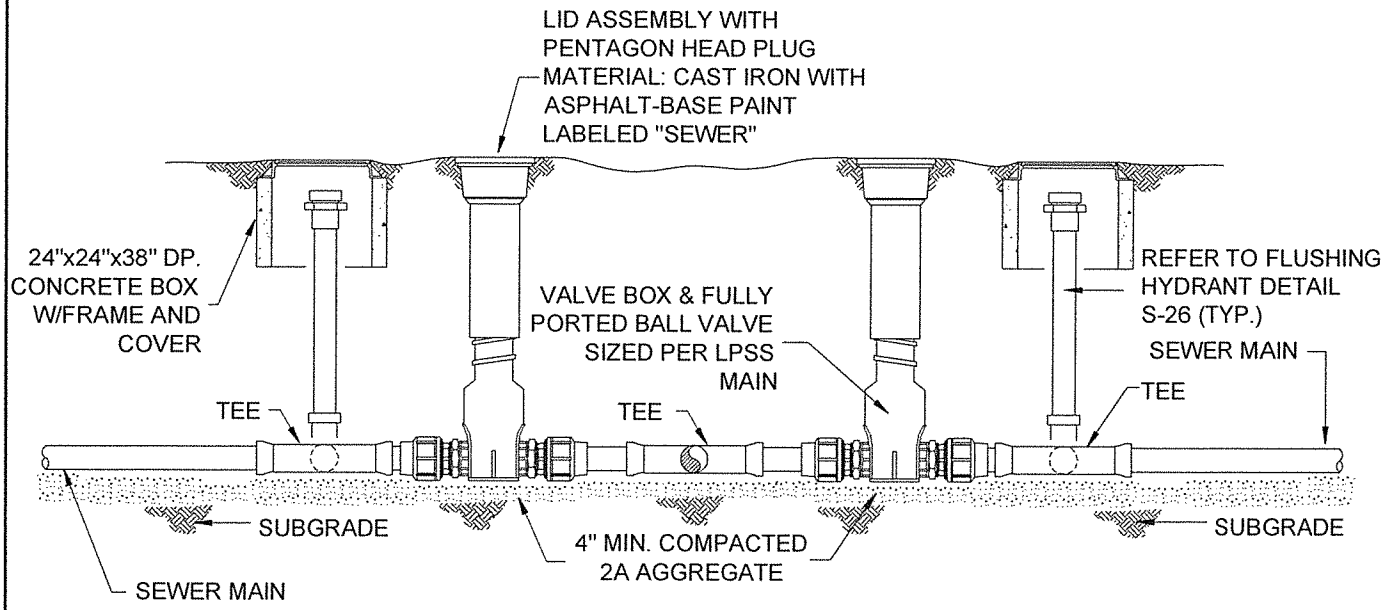

ELEVATION VIEW

2 WAY BRANCH CLEANOUT ASSEMBLY

SCALE: NONE

Entech Engineering, Inc.
Engineering Architecture Construction
Corporate Office:
4 S. Fourth Street Reading, PA 19602
ph: 610.373.6667 fx: 610.373.7537

Pottsville, PA ph: 570.628.5655
Mountaintop, PA ph: 570.868.0275
Lititz, PA ph: 717.626.6666
www.entecheng.com 1.800.825.1372

FOSTER TOWNSHIP
2 WAY BRANCH CLEANOUT ASSEMBLY

PREPARED BY	CHECKED BY	APPROVED BY	PROJECT NO.	SCALE:	DATE:	DRAWING NO.
MBD	BAK	EJP	4147.18	NONE	6/13/12	S-27

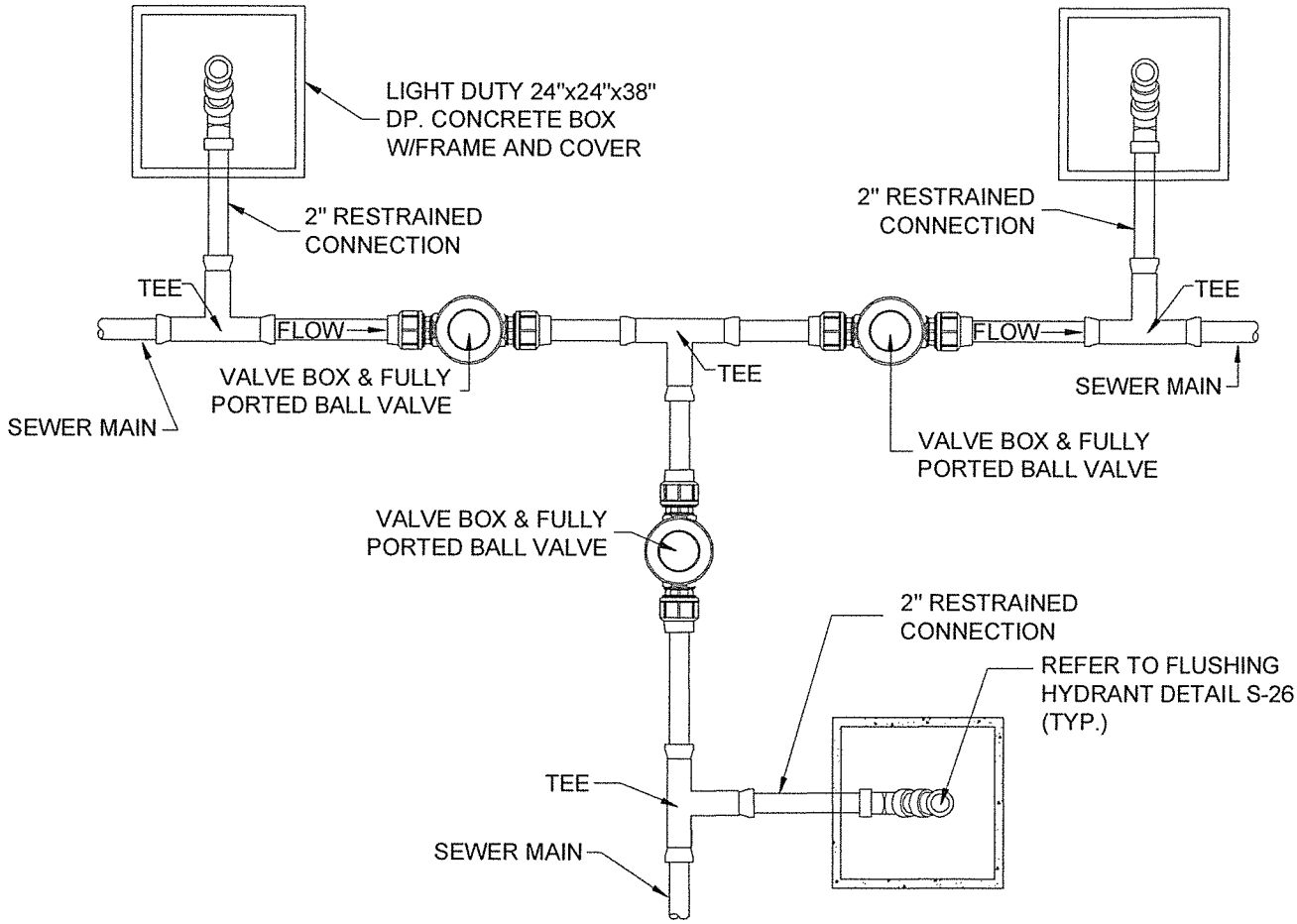

PLAN VIEW

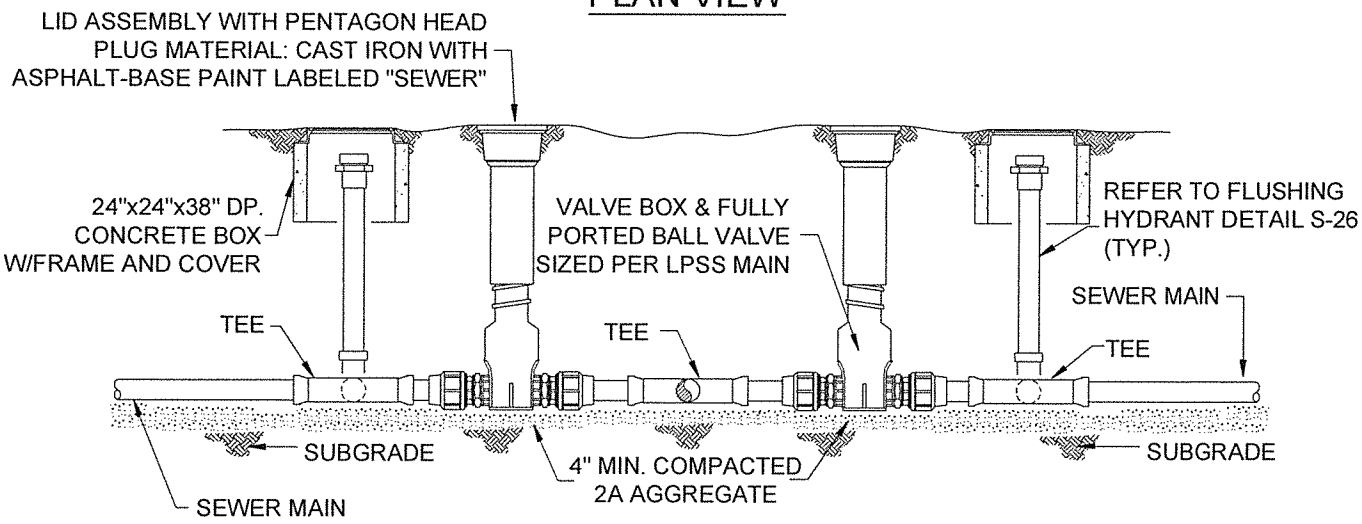

ELEVATION VIEW

3 WAY BRANCH CLEANOUT ASSEMBLY

SCALE: NONE

Entech Engineering, Inc.
Engineering Architecture Construction
Corporate Office:
4 S. Fourth Street Reading, PA 19602
ph: 610.373.6667 fx: 610.373.7537

Pottsville, PA ph: 570.628.5655
Mountaintop, PA ph: 570.868.0275
Lititz, PA ph: 717.626.6666
www.entecheng.com 1.800.825.1372

FOSTER TOWNSHIP
3 WAY BRANCH CLEANOUT ASSEMBLY

PREPARED BY	CHECKED BY	APPROVED BY	PROJECT NO.	SCALE:	DATE:	DRAWING NO.
MBD	BAK	EJP	4147.18	NONE	6/13/12	S-28

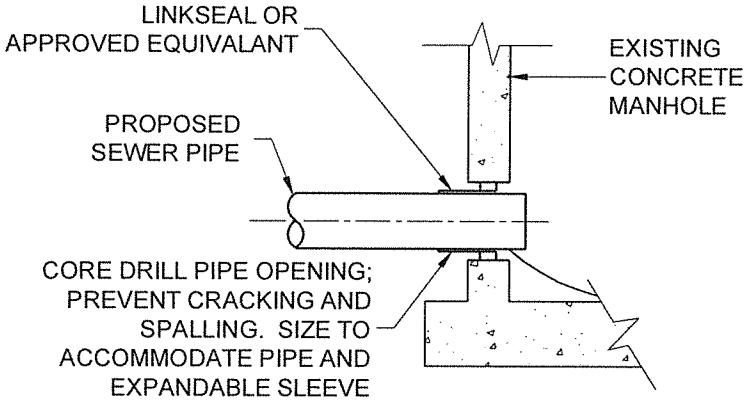

NOTES:

1. PROPOSED SEWER PIPE INVERT ELEVATION SHALL NOT BE BELOW EXISTING SEWER INVERT ELEVATION.
2. PROPOSED SEWER PIPE SHALL BE LOCATED A MINIMUM OF 8" ABOVE OR BELOW EXISTING MANHOLE JOINT.
3. AFTER CONNECTION OF PIPE TO MANHOLE, REMOVE CONCRETE CHANNEL AS REQUIRED AND RECONSTRUCT CHANNEL.
4. KEEP GROUNDWATER, SURFACE WATER AND DEBRIS FROM ENTERING EXISTING FACILITIES.
5. MAINTAIN EXISTING FLOW DURING CONSTRUCTION.
6. DROPS OVER 2 FT WILL REQUIRE AN INSIDE DROP CONNECTION.

TYPICAL TIE-IN TO EXISTING MANHOLE DETAIL

SCALE: NONE

ENTECH
Entech Engineering, Inc.
Engineering Architecture Construction
Corporate Office:
4 S. Fourth Street Reading, PA 19602
ph: 610.373.6667 fx: 610.373.7537
Pottsville, PA ph: 570.628.5655
Mountaintop, PA ph: 570.868.0275
Lititz, PA ph: 717.626.6666
www.entecheng.com 1.800.825.1372

FOSTER TOWNSHIP
TYPICAL TIE-IN TO EXISTING MANHOLE DETAIL

PREPARED BY	CHECKED BY	APPROVED BY	PROJECT NO.	SCALE:	DATE:	DRAWING NO.
MBD	BAK	EJP	4147.18	NONE	6/13/12	S-29

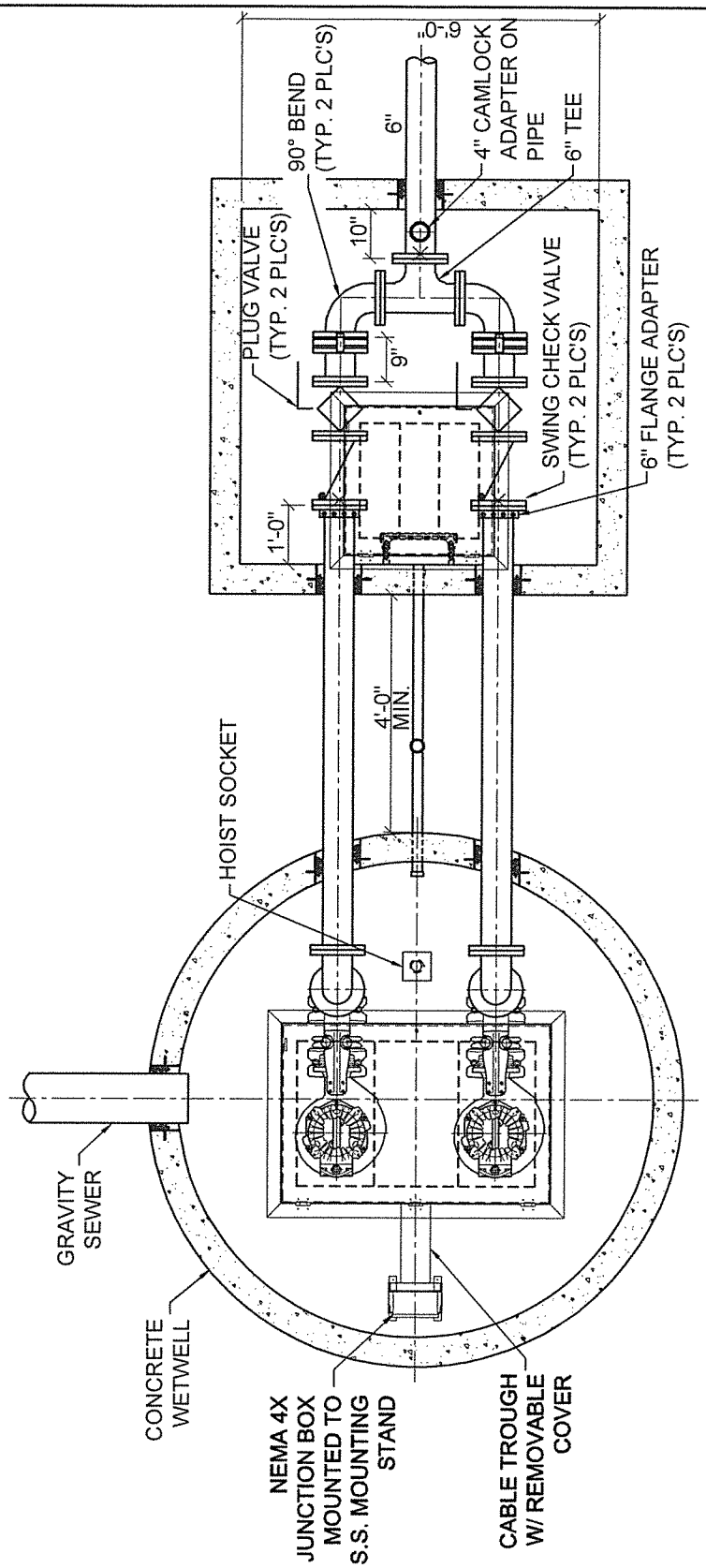

FOR GENERAL ARRANGEMENT ONLY DETAIL
PLANS TO BE SUBMITTED FOR REVIEW.

PLAN VIEW - PUMP STATION
SCALE: NONE

Entech Engineering, Inc.
Engineering Architecture Construction
Corporate Office:
4 S. Fourth Street Reading, PA 19602
ph: 610.373.6667 fx: 610.373.7537

Pottsville, PA ph: 570.628.5655
Mountaintop, PA ph: 570.868.0275
Lititz, PA ph: 717.626.6666
www.entecheng.com 1.800.825.1372

FOSTER TOWNSHIP
PLAN VIEW - PUMP STATION

PREPARED BY	CHECKED BY	APPROVED BY	PROJECT NO.	SCALE:	DATE:	DRAWING NO.
MBD	BAK	EJP	4147.18	NONE	6/13/12	S-30

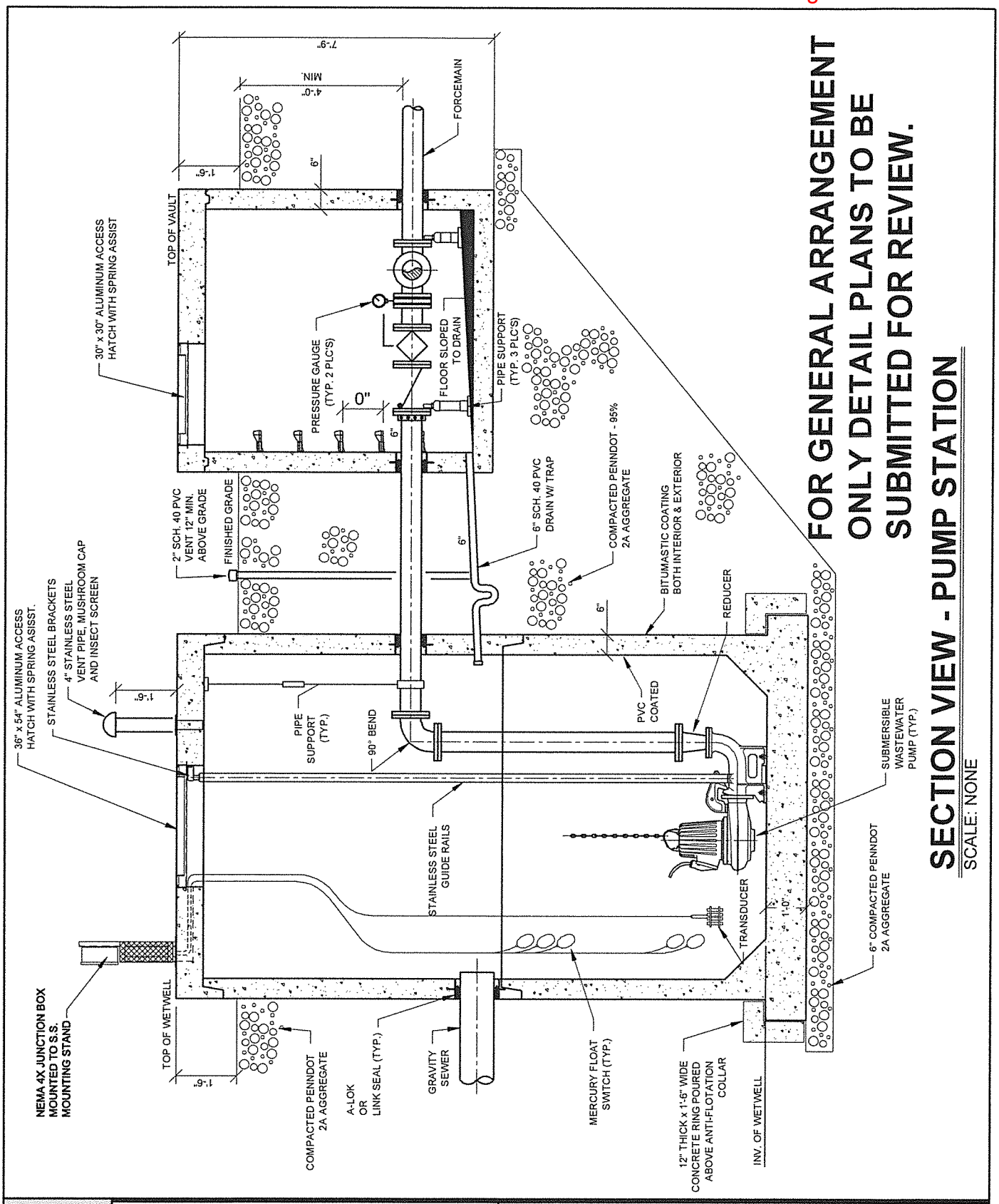

FOR GENERAL ARRANGEMENT ONLY DETAIL PLANS TO BE SUBMITTED FOR REVIEW.

SECTION VIEW - PUMP STATION

SCALE: NONE

ENTECH

Entech Engineering, Inc.
Engineering Architecture Construction
Corporate Office:
4 S. Fourth Street Reading, PA 19602
ph: 610.373.6667 fx: 610.373.7537

Pottsville, PA ph: 570.628.5655
Mountaintop, PA ph: 570.868.0275
Lititz, PA ph: 717.626.6666
www.entecheng.com 1.800.825.1372

FOSTER TOWNSHIP
SECTION - PUMP STATION

PREPARED BY	CHECKED BY	APPROVED BY	PROJECT NO.	SCALE:	DATE:	DRAWING NO.
MBD	BAK	EJP	4147.18	NONE	6/13/12	S-31

FOR GENERAL ARRANGEMENT ONLY DETAIL PLANS TO BE SUBMITTED FOR REVIEW.

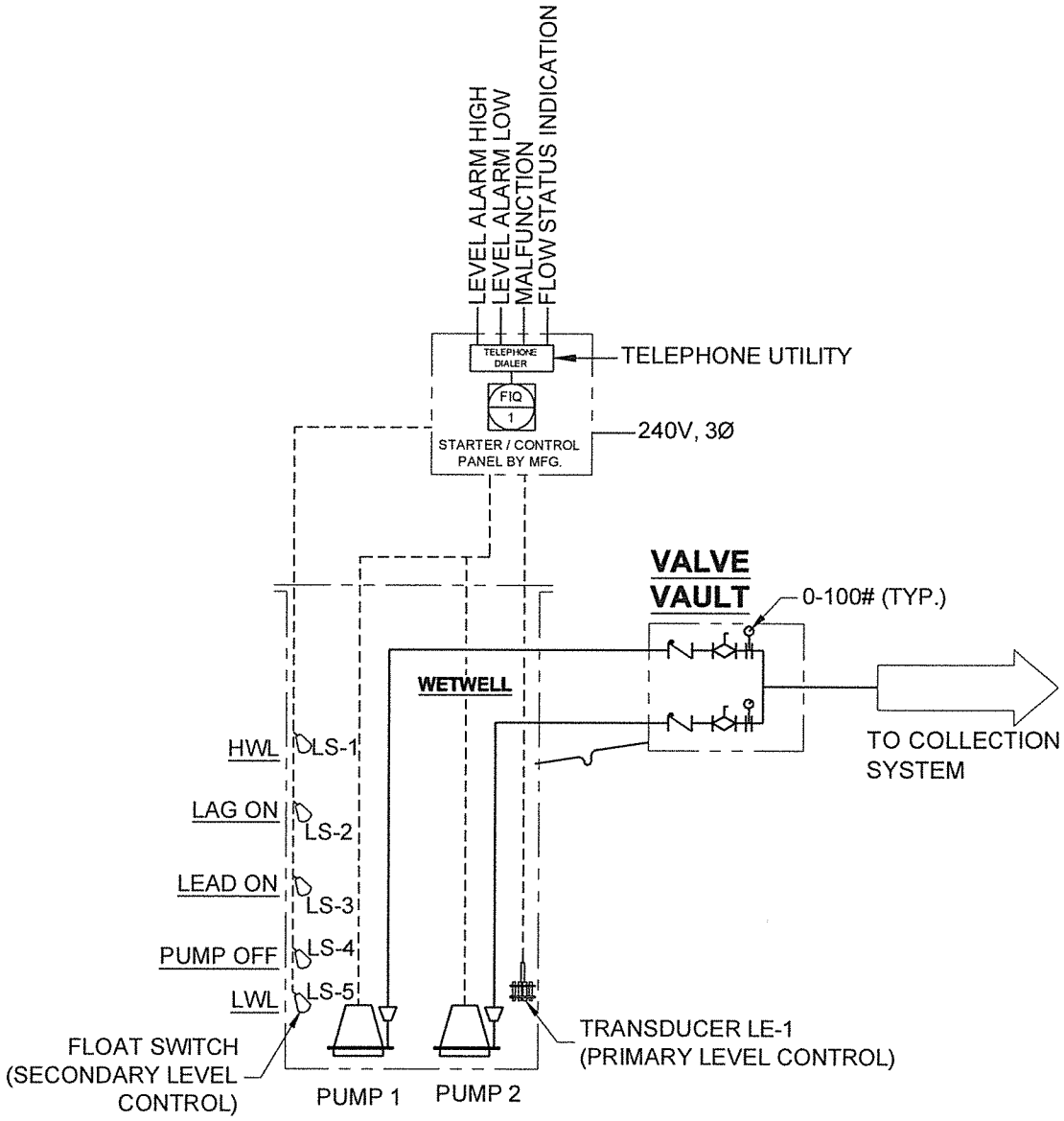

PUMP STATION PROCESS & INSTRUMENTATION DIAGRAM

SCALE: NONE

Entech Engineering, Inc.
Engineering Architecture Construction
Corporate Office:
4 S. Fourth Street Reading, PA 19602
ph: 610.373.6667 fx: 610.373.7537

Pottsville, PA ph: 570.628.5655
Mountaintop, PA ph: 570.868.0275
Lititz, PA ph: 717.626.6666
www.entecheng.com 1.800.825.1372

FOSTER TOWNSHIP
PUMP STATION PROCESS & INSTRUMENTATION DIAGRAM

PREPARED BY	CHECKED BY	APPROVED BY	PROJECT NO.	SCALE:	DATE:	DRAWING NO.
MBD	BAK	EJP	4147.18	NONE	6/13/12	S-32

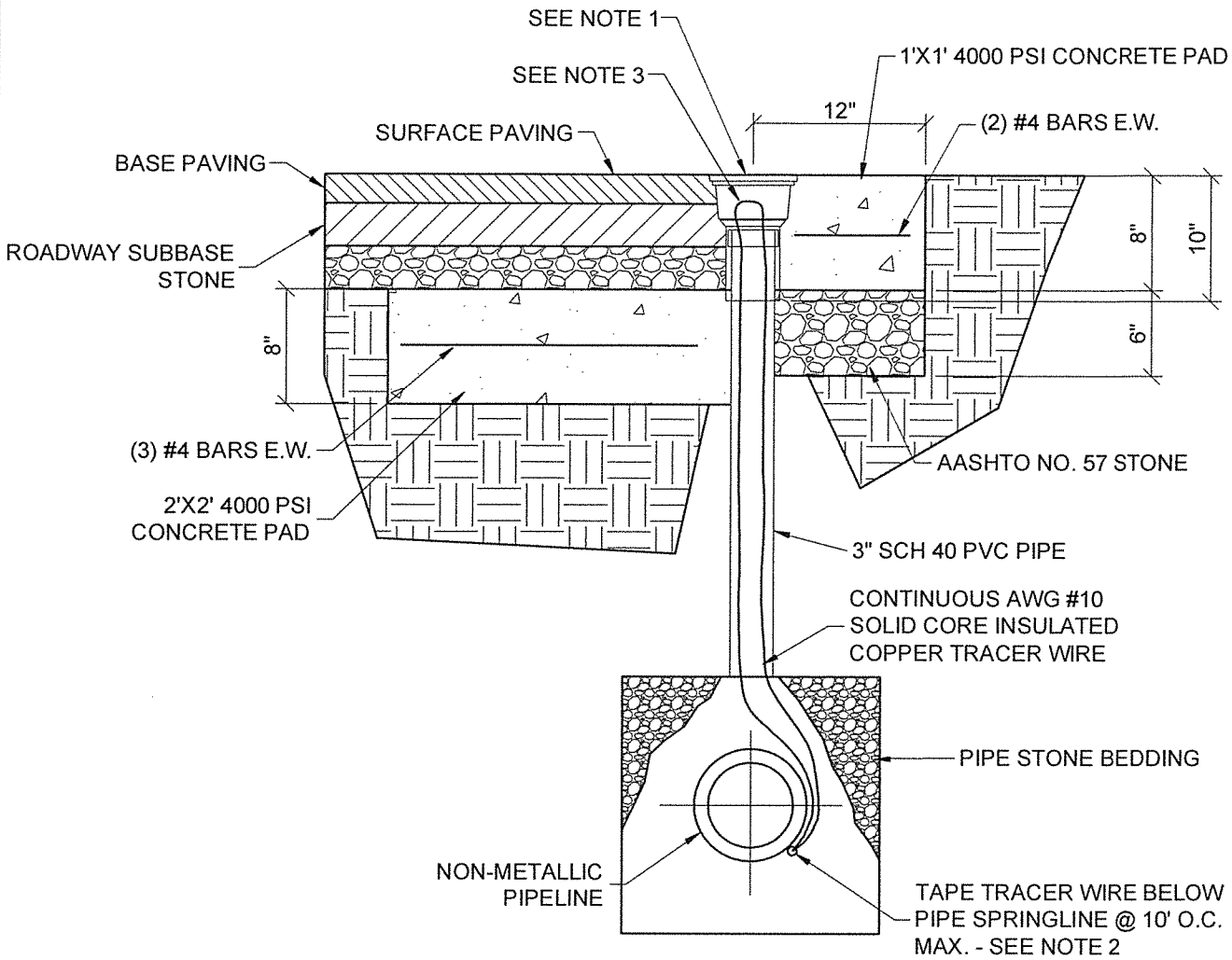

NOTES:

1. C.I. BOX SHALL BE TYLER 10" C.I. VALVE BOX TOP SECTION SLIP MODEL 10T-A WITH 5 1/4" DROP LID MODEL 14549 MARKED "SEWER"
2. DO NOT SPICE TRACER WIRE UNDERGROUND.
3. PROVIDE 3 FEET OF LOOPED WIRE WITHIN TEST STATION BOX.
4. SPACE TEST STATIONS 500 FEET MAX. AND AT ALL CHANGES IN FORCE MAIN DIRECTIONS
5. PROVIDE METALLIC CAUTION TAPE CENTERED ON FORCE MAIN 12" BELOW FINISHED GRADE.

FORCE MAIN TRACER WIRE TEST STATION

SCALE: NONE

ENTECH

Entech Engineering, Inc.
Engineering Architecture Construction
Corporate Office:
4 S. Fourth Street Reading, PA 19602
ph: 610.373.6667 fx: 610.373.7537

Pottsville, PA ph: 570.628.5655
Mountaintop, PA ph: 570.868.0275
Lititz, PA ph: 717.626.6666
www.entecheng.com 1.800.825.1372

FOSTER TOWNSHIP
FORCE MAIN TRACER WIRE TEST STATION

PREPARED BY	CHECKED BY	APPROVED BY	PROJECT NO.	SCALE:	DATE:	DRAWING NO.
MBD	BAK	EJP	4147.18	NONE	6/13/12	S-33

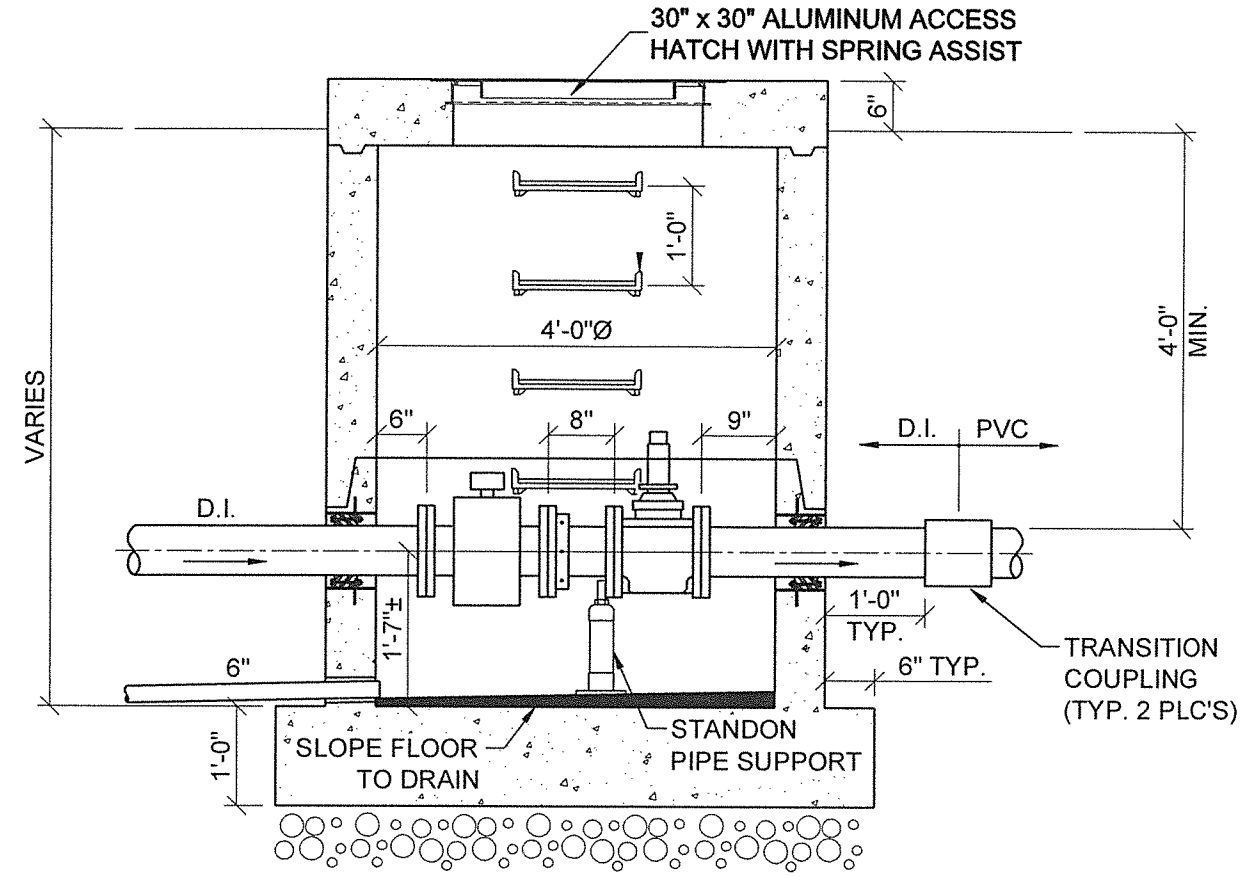

SECTION

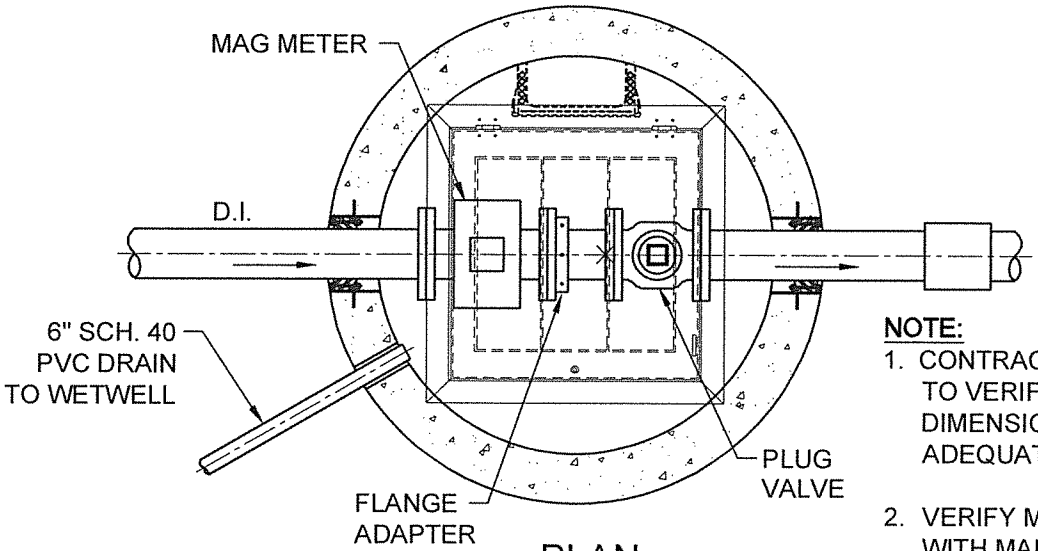

PLAN

NOTE:

1. CONTRACTOR IS RESPONSIBLE TO VERIFY EXISTING DIMENSIONS AND PROVIDE FOR ADEQUATE WORKING SPACE.
2. VERIFY METER CONFIGURATION WITH MANUFACTURER.

FORCE MAIN METERING MANHOLE DETAIL

Entech Engineering, Inc.
Engineering Architecture Construction
Corporate Office:
4 S. Fourth Street Reading, PA 19602
ph: 610.373.6667 fx: 610.373.7537

Pottsville, PA ph: 570.628.5655
Mountaintop, PA ph: 570.868.0275
Lititz, PA ph: 717.626.6666
www.entecheng.com 1.800.825.1372

FOSTER TOWNSHIP
FORCEMAIN METERING MANHOLE DETAIL

PREPARED BY	CHECKED BY	APPROVED BY	PROJECT NO.	SCALE:	DATE:	DRAWING NO.
MBD	BAK	EJP	4147.18	NONE	6/13/12	S-34

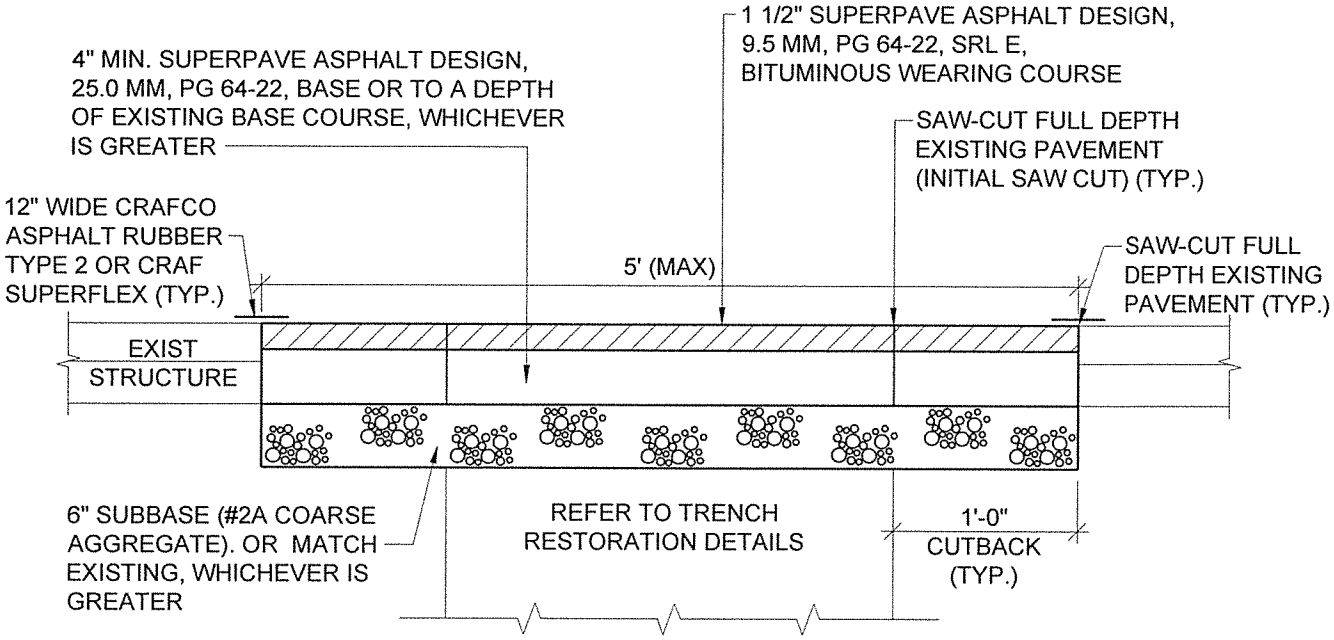

NOTE: 1. MILL AND OVERLAY ONLY IF MORE THAN 20% OF ASPHALT SURFACED STREET IS DISTURBED, ONLY AS DIRECTED.

TYPICAL SURFACE RESTORATION DETAIL (TOWNSHIP ROADWAY & PAVED DRIVEWAY)

Entech Engineering, Inc.
Engineering Architecture Construction
Corporate Office:
4 S. Fourth Street Reading, PA 19602
ph: 610.373.6667 fx: 610.373.7537

Pottsville, PA ph: 570.628.5655
Mountaintop, PA ph: 570.868.0275
Lititz, PA ph: 717.626.6666
www.entecheng.com 1.800.825.1372

FOSTER TOWNSHIP
TOWNSHIP PAVEMENT RESTORATION

PREPARED BY	CHECKED BY	APPROVED BY	PROJECT NO.	SCALE:	DATE:	DRAWING NO.
GEM	BAK	EJP	4147.18	NONE	8/31/12	S-35

APPENDIX G
SEWER CONNECTION PERMIT

Residential or Commercial Building Sewer Application

FOSTER TOWNSHIP ORDINANCE NO. 1 OF 2008, AS MAYBE AMENDED, REQUIRES THAT EACH OWNER OF AN IMPROVED PROPERTY IN THE SERVICE AREA OF THE SEWER SYSTEM CONNECT TO THE SYSTEM YOU ARE REQUIRED TO PAY THE TAP-ON FEE WHICH IS CURRENTLY $2000.00 PER EQUIVALENT DWELLING UNIT AND A $50.00 INSPECTION FEE PER EQUIVALENT DWELLING UNIT.

INSTRUCTIONS TO PARTIES APPLYING FOR A SEWERAGE PERMIT

1. READ THE APPLICATION CAREFULLY AND COMPLETE THE SAME. THEN DRAW ON PAGE 2 AT APPROXIMATELY THE LEVEL OF YOUR LATERAL TAP-ON SEWER LINE, SHOWING YOUR LATERAL TAP-ON LINE FROM WHAT POINT IT WILL LEAVE THE BUILDING ON YOUR LAND TO WHAT POINT IT WILL TAP ON TO THE MAIN SANITARY SEWER LINE.

2. COMPLETE AND SIGN THE ADDENDUM.

3. YOU ARE TO MAKE A CHECK FOR THE AMOUNT INDICATED BY THE TOWNSHIP AS PAYMENT IN FULL OF THE TAP-ON FEE AND INSPECTION.

4. DELIVER ALL THE ABOVE TO THE TOWNSHIP ALONG WITH A COPY OF YOUR DEED AND CONTRACTORS CERTIFICATE OF INSURANCE.

5. UPON REVIEW AND APPROVAL BY THE TOWNSHIP, A PERMIT WILL BE ISSUED TO YOU.

6. AFTER RECEIPT OF THE PERMIT YOU WILL BE ALLOWED TO CONSTRUCT YOUR LATERAL.

7. AFTER YOUR LATERAL TAP-ON SEWER LINE IS COMPLETED, INCLUDING THE TAP-ON CONNECTION TO THE MAIN SANITARY SEWER LINE AND BEFORE IT IS COVERED IN ANY WAY, YOU SHALL CALL THE SEWER INSPECTOR, GIVING HIM FORTY EIGHT (48) HOURS NOTICE, TO INSPECT THE INSTALLATION. HIS APPROVAL BY SIGNATURE WILL INDICATE YOUR COMPLIANCE WITH THE CONDITIONS OF THE TAP-ON PERMIT. (SEWER INSPECTOR: DAVE POPIAK PHONE: 956-0721)

8. YOU ARE REMINDED THAT AN ISSUED PERMIT MAY SUBSEQUENTLY BE REVOKED AS EXPLAINED ON PAGE 1 OF THE APPLICATION.

THE BELOW APPLICANT HEREBY ACKNOWLEDGES RECEIPT OF A COPY OF THESE INSTRUCTIONS ON THE DATE BELOW INDICATED.

_____ DATE:_____, 201__

SIGNATURE OF APPLICANT

FOSTER TOWNSHIP SEWER PERMIT APPLICATION

CHECK LIST

1. A COPY OF DEED OF OWNERSHIP.

2. APPLICATION FOR SEWER PERMIT.

3. A DETAILED SEWER LATERAL PROFILE DRAWING.

   PROFILE DRAWINGS TO INCLUDE THE FOLLOWING:

   A. DIMENSIONS OF LOT.
   B. LOCATION OF FACILITY TO BE SERVED ON PLOT PLAN.
   C. LENGTH AND DIAMETER OF SEWER LATERAL.
   D. LOCATION OF CLEAN OUTS.
   E. POINT OF LATERAL CONNECTION TO THE MAIN SEWER LINE.
   F. NAME OF STREET IN WHICH THE LATERAL IS CONNECTED TO.
   G. NUMBER OF NEAREST MANHOLE.

4. ADDENDUM TO APPLICATION.

5. **ONLY AFTER THE DRAWING IS REVIEWED AND APPROVED BY THE TOWNHSIP WILL A SEWER PERMIT THEN BE ISSUED TO THE APPLICANT.**

6. A CHECK IS TO BE MADE PAYABLE TO FOSTER TOWNSHIP FOR THE AMOUNT OF THE PERMIT.

NAME: _____

ADDRESS: _____

_____

PHONE: _____

FOSTER TOWNSHIP, LUZERNE COUNTY, PENNSYLVANIA

APPLICATION FOR SEWERAGE PERMIT

THE UNDERSIGNED APPLICANT UNDERSTANDS THAT FALSE STATEMENTS HEREON ARE MADE SUBJECT TO THE CRIMINAL PENALTIES OF 18Pa. C.S.A. Sect. 4904 RELATING TO UNSWORN FALSIFICATION TO AUTHORITIES. THIS APPLIES TO FALSE STATEMENTS MADE ANYWHERE ON ANY PAGE OF THIS APPLICATION FOR SEWERAGE PERMIT.

The term "sewerage inspector" as used herein refers to the sewerage inspector of Foster Township.

The word "applicant" as used herein refers to all the undersigned applicants, be they one or more.

APPLICATION FOR SEWERAGE PERMIT No._____ Filed_____, 201__ Fee $2,050.00
Consists of 3 pages
Payable to:
Foster Township, Luzerne County, PA
At time of filing of this application.

A. LOCATION, OWNERSHIP AND PRESENT USE OF PROPERTY:

1. Street, Number and/or specific location _____
2. Deed Owner _____
3. Owner's Address _____
4. Present Tenant _____
5. Present use of structure (& No. of Families) _____
6. Dimensions of Land _____
7. Site is Located in _____ Zoning District as shown on Zoning Map.

B. APPLICANT

1. Name of Applicant _____
2. Address of Applicant _____
3. Owner, Leasee, or authorized agent for owner of subject property_____
4. Applicant's Signature acknowledges receiving a complete copy of this application
   Applicant's Signature _____ Date _____, 201__

==========DO NOT WRITE BELOW THIS LINE==========

FOR OFFICE USE ONLY

B. APPROVAL AND DATES OF ACTION TAKEN:

1. Application approved and permit hereby granted: Yes ☐ No ☐ Date: _____
2. Reason for Denial of Application _____

_____

Conclusion: The site, plans, and specifications of the above proposed sewage disposal system are (not) in compliance with the provisions of the Pennsylvania Sewage Facilities Act, as amended, and the standards adopted pursuant to said act.

Date: _____, 20_

_____

Sewerage Inspector, Foster Township,
Luzerne County, PA

NOTE: This permit applies to sewerage only and shall not relieve applicant from obtaining such other permits as may be required by law.

APPLICATION FOR SEWERAGE PERMIT
DIAGRAM OF SEWERAGE SYSTEM

Application No: _____

ADDENDUM TO APPLICATION
TO FOSTER TOWNSHIP FOR SANITARY SEWERAGE PERMIT

Application is hereby made to Foster Township for a permit to build, erect or alter a sanitary sewerage system on the undersigned applicant's real property and connect or tap on to an already existing sanitary sewerage system or lines of Foster Township (the "Township"), from said real property and which shall be located as shown on the diagram on the following sheet(s) and/or to use the real property for the purposes described hereunder. The information which follows, together with said location diagram, is made part of this application by the undersigned applicant (whether one or more, the "Applicant"). It is understood and agreed by the applicant that any error, misstatement or misrepresentation of any material fact or failure to conform to the requirements and regulations of the Township, or any change in the location, size or size or use of said system or related sewer lines made subsequent to the issuance of any permit hereunder without approval of the Township, or the failure of the applicant to keep open said sewerage system and connection for final inspection thereof be the Township or any designee of the Township or any violation by the applicant of any of his, her, its or their covenants and promises hereunder or violation of any of the present and hereafter enacted rules and regulations of Township, including failure to timely pay charges imposed by Township, shall constitute sufficient grounds for the revocation by the Township, of any permit issued hereunder as a result of this application. If at anytime after the date of this Application, there is an increase in the number of units and/or gallons of water used on said real property served by any permit hereunder, the same shall thereupon be reported by the applicant or his, her, its or their heirs, successors and assigns, to the Township as such may then result in additional connection or tap=on permit fees hereunder with regard to any permit issued hereunder.

Upon revocation of any said permit the applicant shall forthwith upon direction of the Township disconnect and discontinue any said sewerage system and/or line(s) and connection(s) permitted hereunder; and in the event the applicant does not do so, then the applicant hereby authorizes the Township, to do so and to come upon the applicant's said real property to do so; the applicant shall be solely responsible for the cost of such disconnection and shall reimburse the Township for the same where it shall perform the disconnection. Said revocation shall be determined only after a duly held hearing. The Township shall have any and all remedies allowed them by law in addition to those aforesaid and are hereby authorized to proceed in law and/or equity to enforce the same. The Applicant shall be exclusively responsible for the notification of his, her, its or their heirs, successors and assigns and any and all vendees lessees, licensees and mortgagees and all other parties involved or to be involved with the applicant's said real property of all the terms and provisions hereof and of any said revocation, disconnection and so forth.

As this application may also be for connection or tap-on to a sewer line or facility owned, operated and/or controlled by the Township, the applicant by signing this application agrees to and shall abide by all existing and hereafter enacted and relevant resolutions and regulations of the Township including but not limited to charges and fees of Township; and the type of connection or tap-on to be made and constructed, thence being attached hereto a Sewer Lateral Standard specifications and plan for the standard tap-on required hereunder which shall be forthwith constructed by the applicant at applicant's own cost after the issuance of a permit hereunder and which specification is an integral part hereof. Applicant agrees to the right and/or request of the Township or any of their designee(s) to come upon the outside of the applicant' a said real property at anytime and any number of times hereafter and into the inside of any structure thereon anytime and any number of times hereafter after forty-eight (48) hours' notice to make any inspections of said connection or tap-on and sanitary sewage flow into the sanitary sewerage system and lines of the Township and to make tests of the same. Applicant shall never discharge or introduce any storm water or other prohibited matter into any sanitary sewerage system and lines of the Township and shall never install or use any pump, pipe, device or equipment on the applicant's said real property capable of performing any of said prohibited activities. Said other prohibited matter shall be that determined to be such by said resolutions and/or regulations

This Application shall automatically become part of and be incorporated in any permit issued hereunder

Any part of this Application or the permit issued pursuant thereto finally determined by a court of record as void or invalid shall he severable from the remainder of this Application which shall remain in full legal force and effect

The term "undersigned applicant' shall apply to all the undersigned, be they one (1) or more.

The applicant, his, her, its and/or their heirs, successors and assigns, intend to be and shall be legally bound hereby all the foregoing and all that contained in this Application and further verifies hereby that all the statements made by the Applicant on this Application are true and correct. All the foregoing statements and this verification thereof are made subject to the penalties of 18 Pa. C. S. A. Section 4904 of the Pennsylvania Crimes Code. All the covenants and promises hereunder shall run with the applicant's said real property and shall survive the transfer of title thereto said real property.

_____ _____

Applicant Applicant

Phone No: _____

APPENDIX G
INDUSTRIAL WASTES QUESTIONNAIRE

FOSTER TOWNSHIP SEWER AUTHORITY
1000 Wyoming Avenue
P.O. Box 465, Freeland, PA 18224
Phone (570) 636-3757
Fax (570) 636-3584

For TOWNSHIP Use Only
Date Received: _____
Application No: _____

Industrial Wastes Questionnaire

1. Complete the company name, facility address, phone number and mailing address:

   Company Name: _____

   Facility Address: _____
   (if applicable, include any suite or unit #) _____
   Phone Number: _____

   Mailing Address: _____
   (if different from the facility address) _____
   _____

2. Name, title, telephone number, and email of the person authorized to represent this firm in official dealings with the Authority:

3. Name, title, telephone number, and email of alternate person to contact concerning information provided herein:

4. Describe the business activity (major products manufactured, services provided, etc.) of the company at this address:

5. Startup date at present address: _____/_____ (month/year)

6. Number of employees at this address: _____

7. Is this a multitenant facility (more than one company in the same building)? ☐ No ☐ Yes
   If yes, please indicate the suite or unit number above.

8. Does this company have additional facilities/addresses in the Foster Township Area? ☐ No ☐ Yes

9. Facility discharges wastewater to: ☐ sanitary sewer ☐ septic tank ☐ other: _____

10. Indicate the general type(s) of business function(s) at this address by checking the appropriate box(es):

    ☐ Industrial/Manufacturing ☐ Commercial/Retail ☐ Office Functions

    ☐ Service Provider ☐ Warehouse/Distribution ☐ Natural Gas Support Industry

11. Indicate applicable Standard Industrial Classification (SIC) code(s): _____

12. Indicate applicable North American Industry Classification (NAICS) code(s): _____

13. Indicate the general type(s) of business function(s) at this address by checking the appropriate box(es):

☐ Industrial/Manufacturing ☐ Commercial/Retail ☐ Office Functions

☐ Service Provider ☐ Warehouse/Distribution ☐ Natural Gas Support Industry

14. Use water utility billing or water meter information to answer the following questions. If this information is not obtainable, please estimate the facility's water usage and volumes.

a. Incoming water volume (city and well) per year, in gallons: _____

b. Incoming water determination method: ☐ water bill(s) ☐ water meter readings ☐ estimate

c. Does this total include water for lawn irrigation? ☐ No ☐ Yes, Estimated Volume: _____

15. Indicate all types of discharges to the sanitary sewer and their respective volumes:

☐ **Sanitary waste from employees** (e.g., restroom waste) Volume [gallons/year]: _____

☐ **Non-contact cooling water** (used for cooling - no contact with raw materials, parts, or products)
☐ Once-through ☐ Re-circulated/Reused Volume [gallons/year]: _____

☐ **Any other discharge to the sewer**– describe the sources and their respective volumes in the spaces below (this includes, but is not limited to: floor & equipment washing, vehicle washing, general sanitizing, contact cooling water, manufacturing/processing, food preparation, any product/chemical disposal, etc.):

Description of Discharge	Volume [gallons/yr]	Volume Determination
Ex1: Floor scrubber water from production area	**5,200**	**50 gal, 2x week, 52 weeks/ yr**
Ex2: Process equipment	**117,000**	**5 gal/min, 90min/day**
1.		
2.		
3.		
4.		
5.		

16. Are bulk chemicals received or stored at this facility? ☐ No ☐ Yes

17. Are there floor drains/sumps in work areas or chemical storage areas? ☐ No ☐ Yes

18. Is any wastewater pretreated prior to discharging (solids/oil/metals removal, pH adjustments, etc.)? ☐ No ☐ Yes

19. If your facility employs or will be employing processes in any of the industrial categories or business activities listed below (regardless of whether they generate wastewater, waste sludge, or hazardous waste), place a check beside the category of business activity (check all that apply). Facilities with "Office," "Commercial/Retail" or "Warehouse/Distribution" general business functions may not have any applicable operations listed. **Include all operations, even if they do not generate wastewater:**

	Aluminum Forming
	Asbestos Manufacturing
	Battery Manufacturing
	Can Making
	Carbon Black
	Centralized Waste Treatment
	Coal Mining
	Coil Coating
	Copper Forming
	Electric and Electronic Components Manufacturing
	Electroplating
	Feedlots
	Fertilizer Manufacturing
	Foundries (Metal Molding and Casting)
	Glass Manufacturing
	Grain Mills
	Inorganic Chemicals
	Iron and Steel
	Leather Tanning and Finishing
	Metal Finishing
	Nonferrous Metals Forming
	Nonferrous Metals Manufacturing
	Organic Chemicals Manufacturing
	Paint and Ink Formulating
	Paving and Roofing Manufacturing
	Pesticides Manufacturing
	Petroleum Refining
	Pharmaceutical
	Plastic and Synthetic Materials Manufacturing
	Plastics Processing Manufacturing
	Porcelain Enamel
	Pulp, Paper, and Fiberboard Manufacturing
	Rubber
	Soap and Detergent Manufacturing
	Steam Electric
	Sugar Processing
	Textile Mills
	Timber Products
	Transportation Equipment Cleaning

A facility with processes included in these business areas may be covered by EPA's categorical pretreatment standards. These facilities are termed "categorical industrial users."

20. For the following parameters please indicate if the pollutant is known present, suspected present or suspected absent at the facility as a raw product, a constituent in a chemical (verify MSDS) or a by-product of any chemical or process. DO NOT LEAVE BLANKS

Parameter	Known Present	Suspected Present	Suspected Absent
Acrolein			
Acrylonitrile			
Benzene			
Bromoform			
Carbon tetrachloride			
Chlorobenzene			
Chlorodibromomethane			
Chloroethane			
2-chloroethylvinyl ether			
Chloroform			
Dichlorobromomethane			
1,1-dichloroethane			
1,2-dichloroethane			
1,1-dichloroethylene			
1,2-dichloropropane			
1,3-dichloropropylene			
Ethylbenzene			
Methyl bromide			
Methyl chloride			
Methylene chloride			
1,1,2,2-tetrachloroethane			
Tetrachloroethylene			
Toluene			
1,2-trans-dichloroethylene			
1,1,1-trichloroethane			
1,1,2-trichloroethane			
Trichloroethylene			
Vinyl chloride			
2-chlorophenol			
2,4-dichlorophenol			
2,4-dimethylphenol			
4,6-dinitro-o-cresol			
2,4-dinitrophenol			
2-nitrophenol			
4-nitrophenol			
p-chloro-m-cresol			
Pentachlorophenol			
Phenol			
2,4,6-trichlorophenol			
Acenaphthene			
Acenaphthylene			
Anthracene			
Benzidine			
Benzo(a)anthracene			

Wastewater Discharge Survey

Parameter	Known Present	Suspected Present	Suspected Absent
Benzo(a)pyrene			
3,4-benzofluoranthene			
Benzo(ghi)perylene			
Benzo(k)fluoranthene			
Bis(2-chloroethoxy)methane			
Bis(2-chloroethyl)ether			
Bis(2-chloroisopropyl)ether			
Bis (2-ethylhexyl)phthalate			
4-bromophenyl phenyl ether			
Butylbenzyl phthalate			
2-chloronaphthalene			
4-chlorophenyl phenyl ether			
Chrysene			
Dibenzo(a,h)anthracene			
1,2-dichlorobenzene			
1,3-dichlorobenzene			
1,4-dichlorobenzene			
3,3′-dichlorobenzidine			
Diethyl phthalate			
Dimethyl phthalate			
Di-n-butyl phthalate			
2,4-dinitrotoluene			
2,6-dinitrotoluene			
Di-n-octyl phthalate			
1,2-diphenylhydrazine (as azobenzene)			
Fluroranthene			
Fluorene			
Hexachlorobenzene			
Hexachlorobutadiene			
Hexachlorocyclopentadiene			
Hexachloroethane			
Indeno(1,2,3-cd)pyrene			
Isophorone			
Napthalene			
Nitrobenzene			
N-nitrosodimethylamine			
N-nitrosodi-n-propylamine			
N-nitrosodiphenylamine			
Phenanthrene			
Pyrene			
1,2,4-trichlorobenzene			
Aldrin			
Alpha-BHC			
Beta-BHC			
Gamma-BHC			
Delta-BHC			
Chlordane			

Wastewater Discharge Survey

Parameter	Known Present	Suspected Present	Suspected Absent
4,4′-DDT			
4,4′-DDE			
4,4′-DDD			
Dieldrin			
Alpha-endosulfan			
Beta-endosulfan			
Endosulfan sulfate			
Endrin			
Endrin aldehyde			
Heptachlor			
Heptachlor epoxide			
PCB-1242			
PCB-1254			
PCB-1221			
PCB-1232			
PCB-1248			
PCB-1260			
PCB-1016			
Toxaphene			
Antimony, Total			
Arsenic, Total			
Beryllium, Total			
Cadmium, Total			
Chromium, Total			
Copper, Total			
Lead, Total			
Mercury, Total			
Nickel, Total			
Selenium, Total			
Silver, Total			
Thallium, Total			
Zinc, Total			
Cyanide, Total			
Phenols, Total			
pH			
Biochemical Oxygen Demand			
Chemical Oxygen Demand			
Total Suspended Solids			
Aluminum,Total			
Barium, Total			
Carbaryl			
Chloropyrifos			
Cresols			
2,4-D			
Demeton			
Diazinon			
Dicofal			

Wastewater Discharge Survey

Parameter	Known Present	Suspected Present	Suspected Absent
Fluoride			
Guthion			
Hexachlorophene			
Malathion			
Methoxychlor			
Methyl Ethyl Ketone			
Mirex			
Nitrate-Nitrogen			
N-nitrosodiethylamine			
N-nitroso-di-n-butylamine			
Parathion			
Pentachlorobenzene			
Pyridine			
1,2-dibromoethane			
1,2,4,5-Tetrachlorobenzene			
2,4,5-TP (Silvex)			
2,4,5-Trichlorophenol			
TTHM (Total Trihalomethanes)			
Sulfate			
Sulfide			
Sulfite			
Surfactants			
Aluminum, Total			
Barium, Total			
Boron, Total			
Cobalt, Total			
Iron, Total			
Magnesium, Total			
Molybdenum, Total			
Manganese, Total			
Tin, Total			
Titanium, Total			
Asbestos			
Acetaldehyde			
Allyl alcohol			
Allyl chloride			
Amyl acetate			
Aniline			
Benzonitrile			
Benzyl chloride			
Butyl acetate			
Butylamine			
Captan			
Carbofuran			
Carbon disulfide			
Coumaphos			
Crotonaldehyde			

Parameter	Known Present	Suspected Present	Suspected Absent
Cyclohexane			
2,4-D (2,4-Dichlorophenoxy acetic acid)			
Diazinon			
Dicamba			
Dichlobenil			
Dichlone			
2,2-Dichloropropionic acid			
Dichlorvos			
Diethyl amine			
Dimethyl amine			
Dintrobenzene			
Diquat			
Disulfoton			
Diuron			
Epichlorohydrin			
Ethion			
Ethylene diamine			
Ethylene dibromide			
Formaldehyde			
Furfural			
Guthion			
Isoprene			
Isopropanolamine Dodecylbenzenesulfonate			
Kelthane			
Kepone			
Malathion			
Mercaptodimethur			
Methyl mercaptan			
Methyl methacrylate			
Methyl parathion			
Mevinphos			
Mexacarbate			
Monoethyl amine			
Monomethyl amine			
Naled			
Napthenic acid			
Nitrotoluene			
Phenolsulfanate			
Phosgene			
Propargite			
Propylene oxide			
Pyrethrins			
Quinoline			
Resorcinol			
Strontium			

Parameter	Known Present	Suspected Present	Suspected Absent
Strychnine	_____	_____	_____
Styrene	_____	_____	_____
2,4,5-T (2,4,5-Trichlorophenoxy acetic acid)	_____	_____	_____
TDE (Tetrachlorodiphenylethane)	_____	_____	_____
2,4,5-TP [2-(2,4,5 Trichlorophenoxy) propanoic acid]	_____	_____	_____
Trichlorofan	_____	_____	_____
Triethanolamine dodecylbenzenesulfonate	_____	_____	_____
Triethylamine	_____	_____	_____
Trimethylamine	_____	_____	_____
Uranium	_____	_____	_____
Vanadium	_____	_____	_____
Vinyl acetate	_____	_____	_____
Xylene	_____	_____	_____
Xylenol	_____	_____	_____
Zirconium	_____	_____	_____

21. List all other permits (i.e. air, solid waste, stormwater, etc.) :

22. Do you have a spill pollution prevention plan to prevent spills of chemicals, processed industrial wastewater, or slug discharges from entering the Authority's collection system?

_____ Yes (please enclose a copy with the application)

_____ No

_____ N/A (Not applicable since there are no floor drains and/or the facility discharge(s) only domestic wastes.)

==========

23. Contact information for person completing this survey

This is to be signed by the highest ranking authorized official of your firm after adequate completion of this form and review of the information by the signing official.

"I certify under penalty of law that this document and all attachments were prepared under my direction or supervision in accordance with a system designed to assure that qualified personnel properly gather and evaluate the information submitted. Based on my inquiry of the person or persons who mange the system, or those persons directly responsible for gathering the information, the information is, to the best of my knowledge and belief, true, accurate, and complete. I am aware that there are significant penalties for submitting false information, including possibility of fine and imprisonment for knowing violations."

Name (print): _____ Title: _____

Email: _____ Phone: _____

Signature: _____ Date: _____

24. Return this completed survey via one of the following methods:

Mail: **Foster Township**
1000 Wyoming Avenue
P.O. Box 236, Freeland, PA 18224

Fax: **(570) 636-3584**

(You may wish to retain a copy for your records)

APPENDIX I
SEWER DISTRICTS MAP

FOSTER TOWNSHIP
SANITARY SEWER DISTRICTS
Luzerne County, Pennsylvania

DATE	PREPARED BY	CHECKED BY	PROJECT MANAGER
AUG 2012	MBP	BAK	BAK
PROJECT NO	SCALE	DRAWING NO	
4147.18	NTS	EXH-1	

Pennsylvania-American Water Company's Responses to
the Bureau of Technical Utility Services
Water/Wastewater Division
Data Request Set 1

Docket No. A-2021-3028676

Application of Pennsylvania-American Water Company-Wastewater Division for approval of the rights to: (1) acquire, by sale, certain wastewater system assets of Foster Township; and (2) begin to offer, render, furnish and supply wastewater service to the public in portions of Foster Township, Luzerne County, Pennsylvania

A-21. Please indicate whether Foster has a mandatory wastewater connection ordinance that includes the area of the West End System. If so, please provide a copy of the approved mandatory connection ordinance and indicate whether all properties in PAWC-WD's requested territory are in compliance with the ordinance.

Response: Please refer to Section II, TUS-A-20_Attachment 2 (Page 4 of 198) of Foster Township's Rules and Regulations "CONNECTION" section: "The Owner of any Improved Property located within 150 feet of the sanitary sewer anywhere in this Township, . . . is required at the Owner's expense to connect to the Township's Sewer System in accordance with the provisions of these Rules and Regulations."

Please also refer to Section I, General Provisions Ordinance No. 1 of 2013 (Page 3 of 198) approving Foster Township's Rules and Regulations.

Based upon all available information, all properties are in compliance with Foster Township's Rules and Regulations except for two properties along Carbon Street who have not paid a tap on fee and are not connected to the sewer system.

Name: Brittany Majewski
Title: Municipal Secretary Foster Township

Pennsylvania-American Water Company's Responses to
the Bureau of Technical Utility Services
Water/Wastewater Division
Data Request Set 1

Docket No. A-2021-3028676

Application of Pennsylvania-American Water Company-Wastewater Division for approval of the rights to: (1) acquire, by sale, certain wastewater system assets of Foster Township; and (2) begin to offer, render, furnish and supply wastewater service to the public in portions of Foster Township, Luzerne County, Pennsylvania

A-22. Please provide a breakdown of the sources of funds used to finance the construction of the West End System, including, but not limited to, contributed property, any USDA Rural Development grants and loans, H2O PA grants, and PennVest loans.

Response: Tap on fees - Residential/Commercial users from 8/2009 through 12/2016 at $657,730.32, which includes $180,000.00 from Citterio USA

Butler Township Contribution - $106,260.00

Freeland Municipal Authority Contribution to Wyoming Avenue Pump Station - $197,657.42

PA H2O Grant - $2,500,000.00

PennVest Loan - $7,684,348.00

PA Small Water and Sewer Grant – SR940 Extension - $325,000.00

State Facility Closure Program Grant for continuation of SR940 Extension- $168,420.00

Name: Thomas E. Barna, Jr., P.E.
Title: Penn Eastern Engineers, LLC – Municipal Engineer for Foster Township

Pennsylvania-American Water Company's Responses to
the Bureau of Technical Utility Services
Water/Wastewater Division
Data Request Set 1

Docket No. A-2021-3028676

Application of Pennsylvania-American Water Company-Wastewater Division for approval of the rights to: (1) acquire, by sale, certain wastewater system assets of Foster Township; and (2) begin to offer, render, furnish and supply wastewater service to the public in portions of Foster Township, Luzerne County, Pennsylvania

A-23. Please provide copies of any studies or similar documents utilized by Foster to determine Foster's current tapping fees, including any components thereof (i.e., connection fee, customer facility fee, special purpose fee, etc.).

Response: Please refer to TUS-A-20_Attachment 2 (Page 33 of 198) Appendix C – Tapping Fee Report.

Name: Thomas E. Barna, Jr., P.E.
Title: Penn Eastern Engineers, LLC – Municipal Engineer for Foster Township

Pennsylvania-American Water Company's Responses to
the Bureau of Technical Utility Services
Water/Wastewater Division
Data Request Set 1

Docket No. A-2021-3028676

Application of Pennsylvania-American Water Company-Wastewater Division for approval of the rights to: (1) acquire, by sale, certain wastewater system assets of Foster Township; and (2) begin to offer, render, furnish and supply wastewater service to the public in portions of Foster Township, Luzerne County, Pennsylvania

A-24. Please provide a copy of the certified operator's certificate for the operator PAWC-WD intends to assign to the West End System.

Response: PAWC plans to utilize Foster's current contractor, Environmental Services Corp. of PA (ESC). Please see TUS-A-24_Attachment 1.

Name: Michael Salvo
Title: Senior Manager, Business Development

Commonwealth of Pennsylvania

Department of Environmental Protection

In accordance with the
State Board for Certification of Water and Wastewater Systems Operators
and the Regulations of the
Department of Environmental Protection

DAVID R QUINN

Is Hereby Authorized to Operate

WASTEWATER SYSTEM

Class: A,E, Wastewater
Subclass: 1,2,3,4

Client ID: 224468

DAVID R QUINN
602 CHEMUNG ST
WHITE HAVEN PA 18661-1202

Issue Date Jul 1, 2021
Expiration Date Jun 30, 2024

Mary Roland

Board Chairperson

Certificate No. T1528

Commonwealth of Pennsylvania

Department of Environmental Protection

In accordance with the
State Board for Certification of Water and Wastewater Systems Operators
and the Regulations of the
Department of Environmental Protection

CODY E HENDRICKS

Is Hereby Authorized to Operate

WASTEWATER SYSTEM

Class: D,E, Wastewater
Subclass: 1,4

Client ID: 331572

CODY E HENDRICKS
9121 VALLEY VIEW DR
CLARKS SUMMIT PA 18411-9105

Issue Date Jul 1, 2020
Expiration Date Jun 30, 2023

Joseph G. Swendrowski
Board Chairman

Certificate No. S20630

Commonwealth of Pennsylvania

Department of Environmental Protection

In accordance with the
State Board for Certification of Water and Wastewater Systems Operators
and the Regulations of the
Department of Environmental Protection

RYAN S DETWEILER

Is Hereby Authorized to Operate
WASTEWATER SYSTEM

Client ID: 259581

Class: A,E, Wastewater
Subclass: 1,2,3,4

RYAN S DETWEILER
795 TUNNEL RD
WHITE HAVEN PA 18661-3504

Issue Date Jul 1, 2021
Expiration Date Jun 30, 2024

Pennsylvania-American Water Company's Responses to
the Bureau of Technical Utility Services
Water/Wastewater Division
Data Request Set 1

Docket No. A-2021-3028676

Application of Pennsylvania-American Water Company-Wastewater Division for approval of the rights to: (1) acquire, by sale, certain wastewater system assets of Foster Township; and (2) begin to offer, render, furnish and supply wastewater service to the public in portions of Foster Township, Luzerne County, Pennsylvania

A-25. Please provide copies of Foster's two most recent annual financial statements filed with the Department of Community and Economic Development.

Response: Please refer to:

TUS-A-25_Attachment 1 - 2019 Municipal Annual Audit and Financial Report.

TUS-A-25_Attachment 2 - 2020 Municipal Annual Audit and Financial Report.

Name: Brittany Majewski
Title: Municipal Secretary Foster Township

FOSTER TOWNSHIP

LUZERNE COUNTY, PENNSYLVANIA

2019 MUNICIPAL ANNUAL AUDIT AND FINANCIAL REPORT

Grevera & Associates
Certified Public Accountants & Consultants

FOSTER TOWNSHIP

TABLE OF CONTENTS

	Page(s)
Independent Auditors' Reports	1-2
2019 Municipal Annual Audit and Financial Report	3-17

Grevera & Associates
Certified Public Accountants & Consultants

400 THIRD AVENUE
SUITE 317
KINGSTON, PA 18704-5892

PHONE: (570) 287-4712
FAX: (570) 287-4714

INDEPENDENT AUDITORS' REPORT

Foster Township Supervisors
Foster Township
Luzerne County, Pennsylvania

We have audited the accompanying 2019 Municipal Annual Audit and Financial Report (DCED-CLGS-30) of Foster Township, Luzerne County, Pennsylvania as of and for the year ended December 31, 2019.

Management's Responsibility for the Financial Report

Management is responsible for the preparation and fair presentation of the Municipal Annual Audit and Financial Report in accordance with the basis accounting practices prescribed or permitted by the Commonwealth of Pennsylvania Department of Community and Economic Development (DCED). Management is also responsible for the design, implementation, and maintenance of internal control relevant to the preparation and fair presentation of the Municipal Annual Audit and Financial Report that is free from material misstatement, whether due to error or fraud.

Auditors' Responsibility

Our responsibility is to express an opinion on the financial statements based on our audit. We conducted our audit in accordance with auditing standards generally accepted in the United States of America. Those standards require that we plan and perform the audit to obtain reasonable assurance about whether the Municipal Annual Audit and Financial report is free of material misstatement.

An audit involves performing procedures to obtain audit evidence about the amounts and disclosures in the financial statements. The procedures selected depend on the auditor's judgement, including the assessment of the risks of material misstatement of the financial statements, whether due to fraud or error. In making those risk assessments, the auditor considers internal control relevant to the entity's preparation and fair presentation of the financial statements in order to design audit procedures that are appropriate in the circumstances, but not for the purpose of expressing an opinion on the effectiveness of the entity's internal control. Accordingly, we do not express such opinion. An audit also includes evaluating the appropriateness of accounting policies used and the reasonableness of significant accounting estimates made by management, as well as evaluating the overall presentation of the Municipal Annual Audit and Financial Report.

Foster Township Supervisors
Foster Township
Luzerne County, Pennsylvania

We believe that the audit evidence we have obtained is sufficient and appropriate to provide a basis for our opinion.

Opinion

In our opinion, the 2019 Municipal Annual Audit and Financial Report referred to in the first paragraph presents fairly, in all material respects, the financial position of the various funds and account groups of Foster Township, Luzerne County, Pennsylvania as of December 31, 2019, and the results of operations of such funds for the year then ended on the basis of accounting described in the next paragraph.

Basis of Accounting

These financial statements have been prepared in accordance with accounting practices prescribed or permitted by the Commonwealth of Pennsylvania Department of Community and Economic Development, which is a comprehensive basis of accounting other than accounting principles generally accepted in the United States of America, to comply with the requirements of DCED. These financial statements do not include all of the disclosures required by accounting principles generally accepted in the United States of America, and are not intended to be a presentation in conformity with accounting principles generally accepted in the Untied States of America. Our opinion is not modified with respect to this matter.

Restriction on Use

These financial statements are intended solely for the information and use of the Foster Township Supervisors and management, and the Commonwealth of Pennsylvania Department of Community and Economic Development. This restriction is not intended to limit the distribution of the report, which is a matter of public record.

Herera & Associates

Kingston, PA
August 6, 2020

DCED-CLGS-30 (9-09)

Received by DCED: 08/19/2020
Approved by DCED:

Department of Community & Economic Development
Governor's Center for Local Government Services
Commonwealth Keystone Building
400 North Street, 4th Floor
Harrisburg, PA 17120-0225
Ph: 888-223-6837 | fax: 717-783-1402

2019 MUNICIPAL ANNUAL AUDIT AND FINANCIAL REPORT

400665 FOSTER TWP, LUZERNE COUNTY

DCED-CLGS-30 (9-09)

BALANCE SHEET

DCED-CLGS-30 (09-09)

FOSTER TWP, LUZERNE County

BALANCE SHEET

December 31, 2019

		Governmental Funds				Proprietary Funds		Fid. Fund	Account Groups		Total
		General Fund	Special Revenue (Including State Liquid Fuels)	Capital Projects	Debt Service	Enterprise	Internal Service	Trust and Agency	General Fixed Assets	General Long Term Debt	Memorandum Only
Assets and Other Debits											
100-120	Cash and Investments	197,830	275,267	316		163,470					636,883
140-144	Tax Receivable	24,859	26,275								51,134
121-129, 145-149	Accounts Receivable (excluding taxes)	88,936				71,329					160,265
130.00	Due From Other Funds										
131-139, 150-159	Other Current Assets										
160-169	Fixed Assets					10,603,226			649,462		11,252,688
180-189	Other Debits					169,479					169,479
Total Assets and Other Debits		311,625	301,542	316		11,007,504			649,462		12,270,449
Liabilities and Other Credits											
210-229	Payroll Taxes and Other Payroll Withholdings	17,429									17,429
200-209, 231-239	All Other Current Liabilities	116,893	29,178			63,072					209,143
230.00	Due To Other Funds										

DCED-CLGS-30 (09-09)

FOSTER TWP, LUZERNE County

BALANCE SHEET

December 31, 2019

		Governmental Funds				Proprietary Funds		Fid. Fund	Account Groups		Total
		General Fund	Special Revenue (Including State Liquid Fuels)	Capital Projects	Debt Service	Enterprise	Internal Service	Trust and Agency	General Fixed Assets	General Long Term Debt	Memorandum Only
Liabilities and Other Credits											
260-269	Long-Term-Liabilities					7,160,963					7,160,963
240-259	Current Portion of Long-Term Debt and Other Credits										
Total Liabilities and Other Credits		134,322	29,178			7,224,035					7,387,535
Fund and Account Group Equity											
281-284	Contributed Capital										
290.00	Investment in General Fixed Assets										
270-289	Fund Balance / Retained Earnings on 12/31	177,303	272,364	316		3,783,469			649,462		4,882,914
291-299	Other Equity										
Total Fund and Account Group Equity		177,303	272,364	316		3,783,469			649,462		4,882,914
TOTAL LIABILITIES AND FUND AND ACCOUNT GROUP EQUITY											12,270,449

DCED-CLGS-30 (9-09)

FOSTER TWP, LUZERNE County

STATEMENT OF REVENUES AND EXPENDITURES

December 31, 2019

		Governmental Funds				Proprietary Funds		Fiduciary Fund	Total
		General Fund	Special Revenue (Including State Liquid Fuels)	Capital Projects	Debt Service	Enterprise	Internal Service	Trust and Agency	Memorandum Only
REVENUES									
Taxes									
301.00	Real Estate Taxes	104,598	47,092						151,690
305.00	Occupation Taxes (levied under municipal code)								
308.00	Residence Taxes (levied by cities of the 3rd Class)								
309.00	Regional Asset District Sales Tax (Allegheny County municipalities only)								
310.00	Per Capita Taxes								
310.10	Real Estate Transfer Taxes	36,613							36,613
310.20	Earned Income Taxes / Wage Taxes	300,620							300,620
310.30	Business Gross Receipts Taxes								
310.40	Occupation Taxes (levied under Act 511)								
310.50	Local Services Tax **	57,809							57,809
310.60	Amusement / Admission Taxes								
310.70	Mechanical Device Taxes								
310.90	Other: _____								
	Other: _____								
	Total Taxes	499,640	47,092						546,732
Licenses and Permits									
320-322	All Other Licenses and Permits	550							550
321.80	Cable Television Franchise Fees	29,436							29,436
	Total Licenses and Permits	29,986							29,986
Fines and Forfeits									
330-332	Fines and Forfeits	3,073							3,073
	Total Fines and Forfeits	3,073							3,073

DCED-CLGS-30 (9-09)

FOSTER TWP, LUZERNE County

STATEMENT OF REVENUES AND EXPENDITURES

December 31, 2019

		Governmental Funds				Proprietary Funds		Fiduciary Fund	Total
		General Fund	Special Revenue (Including State Liquid Fuels)	Capital Projects	Debt Service	Enterprise	Internal Service	Trust and Agency	Memorandum Only
REVENUES									
Interest, Rents and Royalties									
341.00	Interest Earnings	31	35	7		25			98
342.00	Rents and Royalties								
	Total Interest, Rents and Royalties	31	35	7		25			98
Federal									
351.03	Highways and Streets								
351.09	Community Development								
351.00	All Other Federal Capital and Operating Grants								
352.01	National Forest								
352.00	All Other Federal Shared Revenue and Entitlements								
353.00	Federal Payments in Lieu of Taxes								
	Total Federal								
State									
354.03	Highways and Streets								
354.09	Community Development								
354.15	Recycling / Act 101								
354.00	All Other State Capital and Operating Grants	59,500							59,500
355.01	Public Utility Realty Tax (PURTA)	439							439
355.02-355.03	Motor Vehicle Fuel Tax (Liquid Fuels Tax) and State Road Turnback		163,351						163,351
355.04	Alcoholic Beverage Licenses								
355.05	General Municipal Pension System State Aid	11,280							11,280
355.07	Foreign Fire Insurance Tax Distribution	17,985							17,985
355.08	Local Share Assessment/Gaming Proceeds	4,290							4,290
355.09	Marcellus Shale Impact Fee Distribution								

DCED-CLGS-30 (9-09)

FOSTER TWP, LUZERNE County

STATEMENT OF REVENUES AND EXPENDITURES

December 31, 2019

		Governmental Funds				Proprietary Funds		Fiduciary Fund	Total
		General Fund	Special Revenue (Including State Liquid Fuels)	Capital Projects	Debt Service	Enterprise	Internal Service	Trust and Agency	Memorandum Only
REVENUES									
State									
355.00	All Other State Shared Revenues and Entitlements								
356.00	State Payments in Lieu of Taxes								
	Total State	93,494	163,351						256,845
Local Government Units									
357.03	Highways and Streets								
357.00	All Other Local Governmental Units Capital and Operating Grants								
358.00	Local Government Unit Shared Payments for Contracted Intergovernmental Services								
359.00	Local Governmental Units and Authorities Payments in Lieu of Taxes								
	Total Local Government Units								
Charges for Service									
361.00	General Government	27,828							27,828
362.00	Public Safety								
363.20	Parking								
363.00	All Other Charges for Highway & Street Services								
364.10	Wastewater / Sewage (including connection / tapping fees, sewer usage charges, reserve capacity fee, etc.)					1,016,414			1,016,414
364.30	Solid Waste Collection and Disposal Charge (trash)								
364.60	Host Municipality Benefit Fee for Solid Waste Facility								
364.00	All Other Charges for Sanitation Services								
365.00	Health								
366.00	Human Services								
367.00	Culture and Recreation								
368.00	Airports								

DCED-CLGS-30 (9-09)

FOSTER TWP, LUZERNE County

STATEMENT OF REVENUES AND EXPENDITURES

December 31, 2019

		Governmental Funds				Proprietary Funds		Fiduciary Fund	Total
		General Fund	Special Revenue (Including State Liquid Fuels)	Capital Projects	Debt Service	Enterprise	Internal Service	Trust and Agency	Memorandum Only
REVENUES									
	Charges for Service								
369.00	Bars								
370.00	Cemeteries								
372.00	Electric System								
373.00	Gas System								
374.00	Housing System								
375.00	Markets								
377.00	Transit Systems								
378.00	Water System								
379.00	All Other Charges for Service								
	Total Charges for Service	27,828				1,016,414			1,044,242
	Unclassified Operating Revenues								
383.00	Special Assessments								
386.00	Escheats (sale of personal property)								
387.00	Contributions and Donations from Private Sectors								
388.00	Fiduciary Fund Pension Contributions								
389.00	All Other Unclassified Operating Revenues	301							301
	Total Unclassified Operating Revenues	301							301
	Other Financing Sources								
391.00	Proceeds of General Fixed Asset Disposition								
392.00	Interfund Operating Transfers		6,700			207,056			213,756
393.00	Proceeds of General Long-Term Debt								
394.00	Proceeds of Short Term-Debt								

DCED-CLGS-30 (9-09)

FOSTER TWP, LUZERNE County

STATEMENT OF REVENUES AND EXPENDITURES

December 31, 2019

		Governmental Funds				Proprietary Funds		Fiduciary Fund	Total
		General Fund	Special Revenue (Including State Liquid Fuels)	Capital Projects	Debt Service	Enterprise	Internal Service	Trust and Agency	Memorandum Only
REVENUES									
Other Financing Sources									
395.00	Refunds of Prior Year Expenditures								
	Total Other Financing Sources		6,700			207,056			213,756
	TOTAL REVENUES	654,353	217,178	7		1,223,495			2,095,033
EXPENDITURES									
General Government									
400.00	Legislative (Governing) Body	4,500							4,500
401.00	Executive (Manager or Mayor)								
402.00	Auditing Services / Financial Administration	13,500							13,500
403.00	Tax Collection	9,724							9,724
404.00	Solicitor / Legal Services	23,665				20,324			43,989
405.00	Secretary / Clerk	72,842				5,704			78,546
406.00	Other General Government Administration	21,536				622,277			643,813
407.00	IT-Networking Services-Data Processing								
408.00	Engineering Services	24,984				36,418			61,402
409.00	General Government Buildings and Plant	29,160							29,160
	Total General Government	199,911				684,723			884,634
Public Safety									
410.00	Police								
411.00	Fire	27,985	12,349						40,334
412.00	Ambulance / Rescue								
413.00	UCC and Code Enforcement	10,980							10,980

DCED-CLGS-30 (9-09)

FOSTER TWP, LUZERNE County

STATEMENT OF REVENUES AND EXPENDITURES

December 31, 2019

		Governmental Funds				Proprietary Funds		Fiduciary Fund	Total
		General Fund	Special Revenue (Including State Liquid Fuels)	Capital Projects	Debt Service	Enterprise	Internal Service	Trust and Agency	Memorandum Only
EXPENDITURES									
Public Safety									
414.00	Planning and Zoning	7,219							7,219
415.00	Emergency Management and Communications								
416.00	Militia and Armories								
417.00	Examination of Licensed Occupations								
418.00	Public Scales (weights and measures)								
419.00	Other Public Safety								
	Total Public Safety	46,184	12,349						58,533
Health and Human Services									
420.00-425.00	Health and Human Services								
	Total Health and Human Services								
Public Works - Sanitation									
426.00	Recycling Collection and Disposal								
427.00	Solid Waste Collection and Disposal (garbage)								
428.00	Weed Control								
429.00	Wastewater / Sewage Treatment and Collection					806,843			806,843
	Total Public Works - Sanitation					806,843			806,843
Public Works - Highways and Streets									
430.00	General Services - Administration	170,055	34,165						204,220
431.00	Cleaning of Streets and Gutters	1,209							1,209
432.00	Winter Maintenance – Snow Removal	22,106	33,983						56,089
433.00	Traffic Control Devices	2,544	865						3,409
434.00	Street Lighting		23,561						23,561

DCED-CLGS-30 (9-09)

FOSTER TWP, LUZERNE County

STATEMENT OF REVENUES AND EXPENDITURES

December 31, 2019

		Governmental Funds				Proprietary Funds		Fiduciary Fund	Total
		General Fund	Special Revenue (Including State Liquid Fuels)	Capital Projects	Debt Service	Enterprise	Internal Service	Trust and Agency	Memorandum Only
EXPENDITURES									
Public Works - Highways and Streets									
435.00	Sidewalks and Crosswalks								
436.00	Storm Sewers and Drains	8,318	2,215						10,533
437.00	Repairs of Tools and Machinery	22,825							22,825
438.00	Maintenance and Repairs of Roads and Bridges	41,991	76,839						118,830
439.00	Highway Construction and Rebuilding Projects								
Total Public Works - Highways and Streets		269,048	171,628						440,676
Other Public Works Enterprises									
440.00	Airports								
441.00	Cemeteries								
442.00	Electric System								
443.00	Gas System								
444.00	Markets								
445.00	Parking								
446.00	Storm Water and Flood Control								
447.00	Transit System								
448.00	Water System								
449.00	Water Transport and Terminals								
Total Other Public Works Enterprises									
Culture and Recreation									
451.00	Culture-Recreation Administration								
452.00	Participant Recreation								
453.00	Spectator Recreation								
454.00	Parks	61,000							61,000

DCED-CLGS-30 (9-09)

FOSTER TWP, LUZERNE County

STATEMENT OF REVENUES AND EXPENDITURES

December 31, 2019

		Governmental Funds				Proprietary Funds		Fiduciary Fund	Total
		General Fund	Special Revenue (Including State Liquid Fuels)	Capital Projects	Debt Service	Enterprise	Internal Service	Trust and Agency	Memorandum Only
EXPENDITURES									
Culture and Recreation									
455.00	Shade Trees								
456.00	Libraries								
457.00	Civil and Military Celebrations								
458.00	Senior Citizens' Centers								
459.00	All Other Culture and Recreation								
Total Culture and Recreation		61,000							61,000
Community Development									
461.00	Conservation of Natural Resources								
462.00	Community Development and Housing								
463.00	Economic Development								
464.00	Economic Opportunity								
465-469	All Other Community Development								
Total Community Development									
Debt Service									
471.00	Debt Principal (short-term and long-term)		33,496						33,496
472.00	Debt Interest (short-term and long-term)		2,374			154,559			156,933
475.00	Fiscal Agent Fees								
Total Debt Service			35,870			154,559			190,429
Employer Paid Benefits and Withholding Items									
481.00	Employer Paid Withholding Taxes and Unemployment Compensation	19,212							19,212
482.00	Judgments and Losses								
483.00	Pension / Retirement Fund Contributions	11,515							11,515

DCED-CLGS-30 (9-09)

FOSTER TWP, LUZERNE County

STATEMENT OF REVENUES AND EXPENDITURES

December 31, 2019

		Governmental Funds				Proprietary Funds		Fiduciary Fund	Total
		General Fund	Special Revenue (Including State Liquid Fuels)	Capital Projects	Debt Service	Enterprise	Internal Service	Trust and Agency	Memorandum Only
EXPENDITURES									
Employer Paid Benefits and Withholding Items									
484.00	Worker Compensation Insurance	26,264							26,264
487.00	Other Group Insurance Benefits								
Total Employer Paid Benefits and Withholding Items		56,991							56,991
Insurance									
486.00	Insurance, Casualty, and Surety	18,062							18,062
Total Insurance		18,062							18,062
Unclassified Operating Expenditures									
488.00	Fiduciary Fund Benefits and Refunds Paid								
489.00	All Other Unclassified Expenditures	4,942							4,942
Total Unclassified Operating Expenditures		4,942							4,942
Other Financing Uses									
491.00	Refund of Prior Year Revenues								
492.00	Interfund Operating Transfers	142,435		71,321					213,756
493.00	All Other Financing Uses								
Total Other Financing Uses		142,435		71,321					213,756
TOTAL EXPENDITURES		798,573	219,647	71,321		1,646,125			2,735,666
EXCESS/DEFICIT OF REVENUES OVER EXPENDITURES		-144,220	-2,669	-71,314		-422,630			-640,833

DCED-CLGS-30 (9-06)

FOSTER TWP

December 31, 2019

DEBT STATEMENT

OUTSTANDING BONDS AND NOTES
Listed below are all currently outstanding bond and note issues according to our files, excluding bond issues redeemed or refunded and defeased. Please show the principal payments and make any other necessary corrections and additions.

Purpose	Bond (B) Capital Lease (C) Lease Rental (L) Note (N)	Issue Year (yyyy)	Maturity Year (yyyy)	Original Amount of Issue	Outstanding Beginning of Year (1)	Principal Incurred This Year	Principal Paid This Year	Current Year Accretion on Compound Interest Bonds	Outstanding at Year End (1)	Plus (less) Unamortized Premium (Discount)	Total Balance
General Obligation Bonds and Notes											
Pennvest Loan	Bond	2008	2029	7,684,384	4,023,138		397,174		3,625,964		3,625,964
Bond	Bond	2017	2047	3,700,000	3,620,000		85,000		3,535,000		3,535,000
Revenue Bonds and Notes											
Lease Rental Debt											
Wheel loader lease	Capital Leases	2017	2021	135,930	100,365		33,496		66,869		66,869
Other											

(1) - excludes unamortized premium/discount

Total bonds and notes outstanding	7,227,833
Capitalized lease obligations	0
Net debt	7,227,833

DCED-CLGS-30 (9-09)

FOSTER TWP, LUZERNE County

STATEMENT OF CAPITAL EXPENDITURES

December 31, 2019

Category	Capital Purchases	Capital Construction	Total
Community Development			
Electric			
Fire			
Gas System			
General Government			
Health			
Housing			
Libraries			
Mass Transit			
Parks	59,500		59,500
Police			
Recreation			
Sewer			
Solid Waste			
Streets / Highways			
Water			
Other: _____			
TOTAL CAPITAL EXPENDITURES	59,500		59,500

EMPLOYEE COMPENSATION

Total salaries, wages, commissions, etc. paid this year (including all employees and elected officials) 234,410

DCED-CLGS-30 (9-09)

Independent Public Accountant/Certified Public Accountant Submission Page
Opinion page was provided in lieu of signature page.

SIGNATURE AND VERIFICATION

Signed: Amy Grevera Appointed Auditor/CPA

Grevera & Associates

DCED-CLGS-30 (9-09)

December 31, 2019

NOTES / COMMENTS

FOSTER TOWNSHIP

LUZERNE COUNTY, PENNSYLVANIA

2020 MUNICIPAL ANNUAL AUDIT AND FINANCIAL REPORT

Grevera & Associates
Certified Public Accountants & Consultants

FOSTER TOWNSHIP

TABLE OF CONTENTS

	Page(s)
Independent Auditors' Reports	1-2
2020 Municipal Annual Audit and Financial Report	3-17

Grevera & Associates
Certified Public Accountants & Consultants

400 TOWER AVENUE
SUITE 317
KINGSTON, PA 18704-5892

PHONE: (570) 287-4712
FAX: (570) 287-4714

INDEPENDENT AUDITORS' REPORT

Foster Township Supervisors
Foster Township
Luzerne County, Pennsylvania

We have audited the accompanying 2020 Municipal Annual Audit and Financial Report (DCED-CLGS-30) of Foster Township, Luzerne County, Pennsylvania as of and for the year ended December 31, 2020.

Management's Responsibility for the Financial Report

Management is responsible for the preparation and fair presentation of the Municipal Annual Audit and Financial Report in accordance with the basis accounting practices prescribed or permitted by the Commonwealth of Pennsylvania Department of Community and Economic Development (DCED). Management is also responsible for the design, implementation, and maintenance of internal control relevant to the preparation and fair presentation of the Municipal Annual Audit and Financial Report that is free from material misstatement, whether due to error or fraud.

Auditors' Responsibility

Our responsibility is to express an opinion on the financial statements based on our audit. We conducted our audit in accordance with auditing standards generally accepted in the United States of America. Those standards require that we plan and perform the audit to obtain reasonable assurance about whether the Municipal Annual Audit and Financial report is free of material misstatement.

An audit involves performing procedures to obtain audit evidence about the amounts and disclosures in the financial statements. The procedures selected depend on the auditor's judgement, including the assessment of the risks of material misstatement of the financial statements, whether due to fraud or error. In making those risk assessments, the auditor considers internal control relevant to the entity's preparation and fair presentation of the financial statements in order to design audit procedures that are appropriate in the circumstances, but not for the purpose of expressing an opinion on the effectiveness of the entity's internal control. Accordingly, we do not express such opinion. An audit also includes evaluating the appropriateness of accounting policies used and the reasonableness of significant accounting estimates made by management, as well as evaluating the overall presentation of the Municipal Annual Audit and Financial Report.

Foster Township Supervisors
Foster Township
Luzerne County, Pennsylvania

We believe that the audit evidence we have obtained is sufficient and appropriate to provide a basis for our opinion.

Opinion

In our opinion, the 2020 Municipal Annual Audit and Financial Report referred to in the first paragraph presents fairly, in all material respects, the financial position of the various funds and account groups of Foster Township, Luzerne County, Pennsylvania as of December 31, 2020, and the results of operations of such funds for the year then ended on the basis of accounting described in the next paragraph.

Basis of Accounting

These financial statements have been prepared in accordance with accounting practices prescribed or permitted by the Commonwealth of Pennsylvania Department of Community and Economic Development, which is a comprehensive basis of accounting other than accounting principles generally accepted in the United States of America, to comply with the requirements of DCED. These financial statements do not include all of the disclosures required by accounting principles generally accepted in the United States of America, and are not intended to be a presentation in conformity with accounting principles generally accepted in the Untied States of America. Our opinion is not modified with respect to this matter.

Restriction on Use

These financial statements are intended solely for the information and use of the Foster Township Supervisors and management, and the Commonwealth of Pennsylvania Department of Community and Economic Development. This restriction is not intended to limit the distribution of the report, which is a matter of public record.

Herrera & Associates

Kingston, PA
August 30, 2021

DCED-CLGS-30 (9-09)

Received by DCED: 09/22/2021
Approved by DCED:

Department of Community & Economic Development
Governor's Center for Local Government Services
Commonwealth Keystone Building
400 North Street, 4th Floor
Harrisburg, PA 17120-0225
Ph: 888-223-6837 | fax: 717-783-1402

2020 MUNICIPAL ANNUAL AUDIT AND FINANCIAL REPORT

400665 FOSTER TWP, LUZERNE COUNTY

DCED-CLGS-30 (9-09)

BALANCE SHEET

DCED-CLGS-30 (09-09)

FOSTER TWP, LUZERNE County

BALANCE SHEET

December 31, 2020

		Governmental Funds				Proprietary Funds		Fid. Fund	Account Groups		Total
		General Fund	Special Revenue (Including State Liquid Fuels)	Capital Projects	Debt Service	Enterprise	Internal Service	Trust and Agency	General Fixed Assets	General Long Term Debt	Memorandum Only
Assets and Other Debits											
100-120	Cash and Investments	182,952	275,791	316		263,850					722,909
140-144	Tax Receivable	18,181	24,778								42,959
121-129, 145-149	Accounts Receivable (excluding taxes)	75,491				44,429					119,920
130.00	Due From Other Funds										
131-139, 150-159	Other Current Assets										
160-169	Fixed Assets					9,980,951			668,743		10,649,694
180-189	Other Debits					163,202					163,202
Total Assets and Other Debits		276,624	300,569	316		10,452,432			668,743		11,698,684

Liabilities and Other Credits											
210-229	Payroll Taxes and Other Payroll Withholdings	18,947									18,947
200-209, 231-239	All Other Current Liabilities	22,557	36,354			88,361					147,272
230.00	Due To Other Funds										

FOSTER TWP, LUZERNE County

BALANCE SHEET

December 31, 2020

		Governmental Funds				Proprietary Funds		Fid. Fund	Account Groups		Total
		General Fund	Special Revenue (Including State Liquid Fuels)	Capital Projects	Debt Service	Enterprise	Internal Service	Trust and Agency	General Fixed Assets	General Long Term Debt	Memorandum Only
Liabilities and Other Credits											
260-269	Long-Term-Liabilities					6,775,465					6,775,465
240-259	Current Portion of Long-Term Debt and Other Credits										
Total Liabilities and Other Credits		41,504	36,354			6,863,826					6,941,684
Fund and Account Group Equity											
281-284	Contributed Capital										
290.00	Investment in General Fixed Assets										
270-289	Fund Balance / Retained Earnings on 12/31	235,120	264,215	316		3,588,606			668,743		4,757,000
291-299	Other Equity										
Total Fund and Account Group Equity		235,120	264,215	316		3,588,606			668,743		4,757,000
TOTAL LIABILITIES AND FUND AND ACCOUNT GROUP EQUITY											11,698,684

FOSTER TWP, LUZERNE County

STATEMENT OF REVENUES AND EXPENDITURES

December 31, 2020

REVENUES

		Governmental Funds				Proprietary Funds		Fiduciary Fund	Total
		General Fund	Special Revenue (Including State Liquid Fuels)	Capital Projects	Debt Service	Enterprise	Internal Service	Trust and Agency	Memorandum Only
Taxes									
301.00	Real Estate Taxes	104,723	62,006						166,729
305.00	Occupation Taxes (levied under municipal code)								
308.00	Residence Taxes (levied by cities of the 3rd Class)								
309.00	Regional Asset District Sales Tax (Allegheny County municipalities only)								
310.00	Per Capita Taxes								
310.10	Real Estate Transfer Taxes	53,848							53,848
310.20	Earned Income Taxes / Wage Taxes	295,517							295,517
310.30	Business Gross Receipts Taxes								
310.40	Occupation Taxes (levied under Act 511)								
310.50	Local Services Tax **	41,040							41,040
310.60	Amusement / Admission Taxes								
310.70	Mechanical Device Taxes								
310.90	Other: _____								
	Other: _____								
	Total Taxes	495,128	62,006						557,134
Licenses and Permits									
320-322	All Other Licenses and Permits								
321.80	Cable Television Franchise Fees	28,119							28,119
	Total Licenses and Permits	28,119							28,119
Fines and Forfeits									
330-332	Fines and Forfeits	3,389							3,389
	Total Fines and Forfeits	3,389							3,389

FOSTER TWP, LUZERNE County

STATEMENT OF REVENUES AND EXPENDITURES

December 31, 2020

REVENUES

		Governmental Funds				Proprietary Funds		Fiduciary Fund	Total
		General Fund	Special Revenue (Including State Liquid Fuels)	Capital Projects	Debt Service	Enterprise	Internal Service	Trust and Agency	Memorandum Only
Interest, Rents and Royalties									
341.00	Interest Earnings	367	707			361			1,435
342.00	Rents and Royalties								
Total Interest, Rents and Royalties		367	707			361			1,435
Federal									
351.03	Highways and Streets								
351.09	Community Development								
351.00	All Other Federal Capital and Operating Grants								
352.01	National Forest								
352.00	All Other Federal Shared Revenue and Entitlements								
353.00	Federal Payments in Lieu of Taxes								
Total Federal									
State									
354.03	Highways and Streets								
354.09	Community Development								
354.15	Recycling / Act 101								
354.00	All Other State Capital and Operating Grants								
355.01	Public Utility Realty Tax (PURTA)	478							478
355.02-355.03	Motor Vehicle Fuel Tax (Liquid Fuels Tax) and State Road Turnback		158,963						158,963
355.04	Alcoholic Beverage Licenses	200							200
355.05	General Municipal Pension System State Aid	11,280							11,280
355.07	Foreign Fire Insurance Tax Distribution	17,937							17,937
355.08	Local Share Assessment/Gaming Proceeds	4,290							4,290
355.09	Marcellus Shale Impact Fee Distribution								

FOSTER TWP, LUZERNE County

STATEMENT OF REVENUES AND EXPENDITURES

December 31, 2020

REVENUES

		Governmental Funds				Proprietary Funds		Fiduciary Fund	Total
		General Fund	Special Revenue (Including State Liquid Fuels)	Capital Projects	Debt Service	Enterprise	Internal Service	Trust and Agency	Memorandum Only
State									
355.00	All Other State Shared Revenues and Entitlements								
356.00	State Payments in Lieu of Taxes								
Total State		34,185	158,963						193,148
Local Government Units									
357.03	Highways and Streets								
357.00	All Other Local Governmental Units Capital and Operating Grants	47,372							47,372
358.00	Local Government Unit Shared Payments for Contracted Intergovernmental Services								
359.00	Local Governmental Units and Authorities Payments in Lieu of Taxes								
Total Local Government Units		47,372							47,372
Charges for Service									
361.00	General Government	35,748							35,748
362.00	Public Safety								
363.20	Parking								
363.00	All Other Charges for Highway & Street Services								
364.10	Wastewater / Sewage (including connection / tapping fees, sewer usage charges, reserve capacity fee, etc.)					1,294,453			1,294,453
364.30	Solid Waste Collection and Disposal Charge (trash)								
364.60	Host Municipality Benefit Fee for Solid Waste Facility								
364.00	All Other Charges for Sanitation Services								
365.00	Health								
366.00	Human Services								
367.00	Culture and Recreation								
368.00	Airports								

FOSTER TWP, LUZERNE County

STATEMENT OF REVENUES AND EXPENDITURES

December 31, 2020

REVENUES

		Governmental Funds				Proprietary Funds		Fiduciary Fund	Total
		General Fund	Special Revenue (Including State Liquid Fuels)	Capital Projects	Debt Service	Enterprise	Internal Service	Trust and Agency	Memorandum Only
Charges for Service									
369.00	Bars								
370.00	Cemeteries								
372.00	Electric System								
373.00	Gas System								
374.00	Housing System								
375.00	Markets								
377.00	Transit Systems								
378.00	Water System								
379.00	All Other Charges for Service								
Total Charges for Service		35,748				1,294,453			1,330,201
Unclassified Operating Revenues									
383.00	Special Assessments								
386.00	Escheats (sale of personal property)								
387.00	Contributions and Donations from Private Sectors								
388.00	Fiduciary Fund Pension Contributions								
389.00	All Other Unclassified Operating Revenues	277							277
Total Unclassified Operating Revenues		277							277
Other Financing Sources									
391.00	Proceeds of General Fixed Asset Disposition								
392.00	Interfund Operating Transfers	89,498	6,700			7,144			103,342
393.00	Proceeds of General Long-Term Debt		89,498						89,498
394.00	Proceeds of Short Term-Debt								

FOSTER TWP, LUZERNE County

STATEMENT OF REVENUES AND EXPENDITURES

December 31, 2020

		Governmental Funds				Proprietary Funds		Fiduciary Fund	Total
		General Fund	Special Revenue (Including State Liquid Fuels)	Capital Projects	Debt Service	Enterprise	Internal Service	Trust and Agency	Memorandum Only
REVENUES									
Other Financing Sources									
395.00	Refunds of Prior Year Expenditures								
	Total Other Financing Sources	89,498	96,198			7,144			192,840
	TOTAL REVENUES	734,083	317,874			1,301,958			2,353,915
EXPENDITURES									
General Government									
400.00	Legislative (Governing) Body	4,500							4,500
401.00	Executive (Manager or Mayor)								
402.00	Auditing Services / Financial Administration	13,800							13,800
403.00	Tax Collection	9,600							9,600
404.00	Solicitor / Legal Services	14,179				13,722			27,901
405.00	Secretary / Clerk	95,403				6,966			102,369
406.00	Other General Government Administration	20,198				622,277			642,475
407.00	IT-Networking Services-Data Processing								
408.00	Engineering Services	5,370				6,356			11,726
409.00	General Government Buildings and Plant	62,276							62,276
	Total General Government	225,326				649,321			874,647
Public Safety									
410.00	Police								
411.00	Fire	17,937	32,696						50,633
412.00	Ambulance / Rescue								
413.00	UCC and Code Enforcement	6,432							6,432

FOSTER TWP, LUZERNE County

STATEMENT OF REVENUES AND EXPENDITURES

December 31, 2020

EXPENDITURES

		Governmental Funds				Proprietary Funds		Fiduciary Fund	Total
		General Fund	Special Revenue (Including State Liquid Fuels)	Capital Projects	Debt Service	Enterprise	Internal Service	Trust and Agency	Memorandum Only
Public Safety									
414.00	Planning and Zoning	11,887							11,887
415.00	Emergency Management and Communications								
416.00	Militia and Armories								
417.00	Examination of Licensed Occupations								
418.00	Public Scales (weights and measures)								
419.00	Other Public Safety								
Total Public Safety		36,256	32,696						68,952
Health and Human Services									
420.00-425.00	Health and Human Services								
Total Health and Human Services									
Public Works - Sanitation									
426.00	Recycling Collection and Disposal								
427.00	Solid Waste Collection and Disposal (garbage)								
428.00	Weed Control								
429.00	Wastewater / Sewage Treatment and Collection					706,521			706,521
Total Public Works - Sanitation						706,521			706,521
Public Works - Highways and Streets									
430.00	General Services - Administration	237,519	22,407						259,926
431.00	Cleaning of Streets and Gutters	959							959
432.00	Winter Maintenance – Snow Removal	13,996	25,512						39,508
433.00	Traffic Control Devices	3,230	8,761						11,991
434.00	Street Lighting		19,743						19,743

FOSTER TWP, LUZERNE County

STATEMENT OF REVENUES AND EXPENDITURES

December 31, 2020

EXPENDITURES

		Governmental Funds				Proprietary Funds		Fiduciary Fund	Total
		General Fund	Special Revenue (Including State Liquid Fuels)	Capital Projects	Debt Service	Enterprise	Internal Service	Trust and Agency	Memorandum Only
Public Works - Highways and Streets									
435.00	Sidewalks and Crosswalks								
436.00	Storm Sewers and Drains	11,575	1,203						12,778
437.00	Repairs of Tools and Machinery	14,068							14,068
438.00	Maintenance and Repairs of Roads and Bridges	43,155	38,014						81,169
439.00	Highway Construction and Rebuilding Projects								
Total Public Works - Highways and Streets		324,502	115,640						440,142
Other Public Works Enterprises									
440.00	Airports								
441.00	Cemeteries								
442.00	Electric System								
443.00	Gas System								
444.00	Markets								
445.00	Parking								
446.00	Storm Water and Flood Control								
447.00	Transit System								
448.00	Water System								
449.00	Water Transport and Terminals								
Total Other Public Works Enterprises									
Culture and Recreation									
451.00	Culture-Recreation Administration								
452.00	Participant Recreation	1,219							1,219
453.00	Spectator Recreation								
454.00	Parks	1,500							1,500

FOSTER TWP, LUZERNE County

STATEMENT OF REVENUES AND EXPENDITURES

December 31, 2020

EXPENDITURES

		Governmental Funds				Proprietary Funds		Fiduciary Fund	Total
		General Fund	Special Revenue (Including State Liquid Fuels)	Capital Projects	Debt Service	Enterprise	Internal Service	Trust and Agency	Memorandum Only
Culture and Recreation									
455.00	Shade Trees								
456.00	Libraries								
457.00	Civil and Military Celebrations								
458.00	Senior Citizens' Centers								
459.00	All Other Culture and Recreation								
Total Culture and Recreation		2,719							2,719
Community Development									
461.00	Conservation of Natural Resources								
462.00	Community Development and Housing								
463.00	Economic Development								
464.00	Economic Opportunity								
465-469	All Other Community Development								
Total Community Development									
Debt Service									
471.00	Debt Principal (short-term and long-term)		86,136						86,136
472.00	Debt Interest (short-term and long-term)		2,050			140,979			143,029
475.00	Fiscal Agent Fees								
Total Debt Service			88,186			140,979			229,165
Employer Paid Benefits and Withholding Items									
481.00	Employer Paid Withholding Taxes and Unemployment Compensation	16,751							16,751
482.00	Judgments and Losses								
483.00	Pension / Retirement Fund Contributions	11,320							11,320

FOSTER TWP, LUZERNE County

STATEMENT OF REVENUES AND EXPENDITURES

December 31, 2020

		Governmental Funds				Proprietary Funds		Fiduciary Fund	Total
		General Fund	Special Revenue (Including State Liquid Fuels)	Capital Projects	Debt Service	Enterprise	Internal Service	Trust and Agency	Memorandum Only
EXPENDITURES									
Employer Paid Benefits and Withholding Items									
484.00	Worker Compensation Insurance	26,224							26,224
487.00	Other Group Insurance Benefits								
Total Employer Paid Benefits and Withholding Items		54,295							54,295
Insurance									
486.00	Insurance, Casualty, and Surety	19,199							19,199
Total Insurance		19,199							19,199
Unclassified Operating Expenditures									
488.00	Fiduciary Fund Benefits and Refunds Paid								
489.00	All Other Unclassified Expenditures	128							128
Total Unclassified Operating Expenditures		128							128
Other Financing Uses									
491.00	Refund of Prior Year Revenues								
492.00	Interfund Operating Transfers	13,844	89,498						103,342
493.00	All Other Financing Uses								
Total Other Financing Uses		13,844	89,498						103,342
TOTAL EXPENDITURES		676,269	326,020			1,496,821			2,499,110
EXCESS/DEFICIT OF REVENUES OVER EXPENDITURES		57,814	-8,146			-194,863			-145,195

FOSTER TWP

December 31, 2020

DEBT STATEMENT

OUTSTANDING BONDS AND NOTES
Listed below are all currently outstanding bond and note issues according to our files, excluding bond issues redeemed or refunded and defeased. Please show the principal payments and make any other necessary corrections and additions.

Purpose	Bond (B) Capital Lease (C) Lease Rental (L) Note (N)	Issue Year (yyyy)	Maturity Year (yyyy)	Original Amount of Issue	Outstanding Beginning of Year (1)	Principal Incurred This Year	Principal Paid This Year	Current Year Accretion on Compound Interest Bonds	Outstanding at Year End (1)	Plus (less) Unamortized Premium (Discount)	Total Balance
General Obligation Bonds and Notes											
Pennvest Loan	Bond	2008	2029	7,684,384	3,625,964		300,499		3,325,465		3,325,465
Bond	Bond	2017	2047	3,700,000	3,535,000		85,000		3,450,000		3,450,000
Revenue Bonds and Notes											
Lease Rental Debt											
Wheel loader lease	Capital Leases	2017	2021	135,930	66,869		34,442		32,427		32,427
Silverado lease	Capital Leases	2020	2025	89,498	0	89,498	51,694		37,804		37,804
Other											

(1) - excludes unamortized premium/discount

Total bonds and notes outstanding	6,845,696
Capitalized lease obligations	0
Net debt	6,845,696

FOSTER TWP, LUZERNE County

STATEMENT OF CAPITAL EXPENDITURES

December 31, 2020

Category	Capital Purchases	Capital Construction	Total
Community Development			
Electric			
Fire			
Gas System			
General Government	11,000	9,634	20,634
Health			
Housing			
Libraries			
Mass Transit			
Parks			
Police			
Recreation			
Sewer			
Solid Waste			
Streets / Highways	89,498		89,498
Water			
Other: _____			
TOTAL CAPITAL EXPENDITURES	100,498	9,634	110,132

EMPLOYEE COMPENSATION

Total salaries, wages, commissions, etc. paid this year (including all employees and elected officials) 202,001

Independent Public Accountant/Certified Public Accountant Submission Page
Opinion page was provided in lieu of signature page.

SIGNATURE AND VERIFICATION

Signed: Amy Grevera, CPA Appointed Auditor/CPA

Grevera & Associates

DCED-CLGS-30 (9-09)

December 31, 2020

NOTES / COMMENTS

Pennsylvania-American Water Company's Responses to
the Bureau of Technical Utility Services
Water/Wastewater Division
Data Request Set 1

Docket No. A-2021-3028676

Application of Pennsylvania-American Water Company-Wastewater Division for approval of the rights to: (1) acquire, by sale, certain wastewater system assets of Foster Township; and (2) begin to offer, render, furnish and supply wastewater service to the public in portions of Foster Township, Luzerne County, Pennsylvania

A-26. Please provide an estimate of the number of customer connections, by customer class, anticipated to connect to the West End System within the next five years.

Response: Please refer to TUS A-27_Attachment 1 – Foster Township – Woodside 2020 Wasteload Management Chapter 94 Report, page 1, Section No. 1.

Name: Michael Salvo
Title: Senior Manager, Business Development

Pennsylvania-American Water Company's Responses to
the Bureau of Technical Utility Services
Water/Wastewater Division
Data Request Set 1

Docket No. A-2021-3028676

Application of Pennsylvania-American Water Company-Wastewater Division for approval of the rights to: (1) acquire, by sale, certain wastewater system assets of Foster Township; and (2) begin to offer, render, furnish and supply wastewater service to the public in portions of Foster Township, Luzerne County, Pennsylvania

A-27. Please provide a copy of the Foster's most recent Chapter 94 Municipal Wasteload Management Report submitted to DEP.

Response: Please refer to TUS A-27_Attachment 1.

Name: Michael Salvo
Title: Senior Manager, Business Development

FOSTER TOWNSHIP - WOODSIDE
2020 WASTELOAD MANAGEMENT REPORT

THE FOLLOWING ITEMS CORRESPOND TO APPLICABLE PARAGRAPHS OF SECTION 94.12 OF CHAPTER 94 OF THE DEP RULES AND REGULATIONS

1. The total projected wastewater flow from Foster Township is estimated as follows:

Year	Total EDUs	Total GPD	Notes
2020	810	108,000	1,2
2021	828	109,440	1,2,3
2022	840	110,400	4
2023	852	111,360	4
2024	864	112,300	4
2025	876	113,280	4

Notes:

1. Flow shown is a historic average flow using the Woodside Metering Manhole and the flow meter within the Upper Lehigh Pump Station. (Approximately 80 gpd/EDU). EDU's for Citterio based on metered flow into Foster Township's collection system. 1 EDU is equal to 260 gallons per day. There was an average of 240 EDUs for 2020, for an average flow of 62,400 gallons per day.
2. All of Butler Township residents in Upper Lehigh (29) and the Butler Terrace area (33) are included in the total EDU's as their sewage conveys through Foster Township lines and is treated at the Freeland Municipal Authority's WWTF for a total of 570 residential EDU's.
3. The Foster Avenue (SR0940) Sewer extension project is designed and permitted with projected construction in 2021. An additional 18 EDU's is anticipated to be connected to the system.
4. Assumes the remaining customers, not presently connected in 2020, and remaining vacant homes become occupied in Woodside, Highland, Youngstown, and Upper Lehigh connect to the system.

2. The total projected organic loading (BOD_5) from Foster Township is as follows:

Year	Total EDUs	Total Lbs/Day[1]
2020	810	344
2021	828	352
2022	840	357
2023	852	362
2024	864	367
2025	876	472

Notes:

1. Loading calculated using 2.5 persons/EDU and 0.17 lbs/person.

3. The total projected wastewater flow was based on existing metering records and for Citterio USA is based on previous water usage. The total projected organic loading was based on 2.5 persons per EDU, 100 gpd per person, and 0.17 lbs BOD_5.

4. Plans (11" X 17", sheets A-1 thru A-6) are attached that show the location of the sewer lines within Sub-Area 5, Youngstown, Highland, Woodside and Upper Lehigh sections of the Township.

5. Sewer monitoring is being handled by the Freeland Municipal Authority and the Foster Township Sewer Advisory Board (FTSAB). Maintenance and repair are not applicable as the collection and conveyance system is recently installed. Maintenance for the pump stations and metering manhole are being conducted by Franzosa Trucking Co., Inc. on a weekly and as needed basis.

6. Foster Township does not foresee any overloads with the collection system for the next 5 years as the system is relatively new. Foster Township is in the designphase for a sewer extension along Foster Avenue (SR 0940) from Graham Street in Freeland Borough to Highland Road (SR 2053). This extension would service 6 existing EDU's with a potential to service twelve more EDU's easterly along Foster Avenue, along with un-developed property. Rehabilitation, cleaning or replacement is not applicable at this time as the new system appears to be functioning properly.

7. Foster Township does not own, operate, or maintain any sewage pumping stations within Sub-Area 5. The schedule of the other Pump Stations are as follows:

Pump Station	Ownership	Operations and Maintenance
Upper Lehigh Pump Station	Owns	Franzosa Trucking Co., Inc.
Wyoming Avenue Pump Station	Owns jointly with Freeland Municipal Authority	Freeland Municipal Authority and Franzosa Trucking Co., Inc.
Highland Pump Station	Owns	Franzosa Trucking Co., Inc.
Youngstown Pump Station	Owns	Franzosa Trucking Co., Inc.

8. Foster Township is not aware of any industrial waste discharges within Sub-Area 5, Upper Lehigh, or Highland Areas. The Youngstown/Woodside Area contain Citterio USA Corporation and they utilize a pretreatment facility to meet effluent limitations as set forth by Foster Township and the Freeland Municipal Authority.

9. The Foster Township Board of Supervisors has committed to reduce or eliminate overload conditions in Sub-Area 5's sewer system by removing the old system and replacing the sewer collection and conveyance system. Overloads are not projected in the other areas that received new sewers as the system has more than adequate capacity and the Township foresees minimal if not zero increase in flows caused by inflow/infiltration to the system. However, Foster Township, in cooperation with the Freeland Municipal Authority, has begun a flow monitoring program in 2014 to isolate and investigate where potential inflow/infiltration may occur.

*TOTAL EDU BREAKDOWN

Subarea	Jan - Dec		Future/Vacant Homes	Total
Youngstown (PS)	32		11	43
Woodside (Gravity)	145		23	168
MMI (Gravity)	17		-	17
Highland (PS)	62		10	72
Grove (Gravity)	182		13	195
Butler Twp (into Subarea 5)	33		1	34
Upper Lehigh - Butler	29		-	29
Upper Lehigh - Foster	70		13	83
Citterio (Average)	240		-	314
Foster Avenue(SR 0940)	-		18	18
Total	**810**	**89**		**973**

SUB-AREA 5 SECTION

ALL GRAVITY SEWER LINES SHOWN ON THIS PLAN ARE EXISTING 8" SDR-35 PVC.

GRAPHIC SCALE

100 0 50 100 200 400

(IN FEET)
1 inch = 100 ft.

PENNEASTERN ENGINEERS, LLC.
165 north wilkes-barre boulevard, wilkes-barre, pennsylvania, 18702 phone: (570) 208-3130

REVISIONS
1)

FOSTER TOWNSHIP SEWER PROJECT
FOSTER TOWNSHIP – LUZERNE COUNTY – PENNSYLVANIA

SUB-AREA 5 SEWERS

DRAWN BY	DATE	JOB NO.	SHEET NO.
TEB	6/2014	2008-418	A-1
CHECKED BY	SCALE	SURVEY BK.	
DP	NOTED		

WOODSIDE SECTION

NOTE: MANHOLE AND PIPE LOCATIONS ARE EXAGGERATED FOR PLAN CLARITY.

PENNEASTERN ENGINEERS, LLC.
165 north wilkes-barre boulevard, wilkes-barre, pennsylvania, 18702 phone: (570) 208-3130

REVISIONS

FOSTER TOWNSHIP SEWER PROJECT
FOSTER TOWNSHIP – LUZERNE COUNTY – PENNSYLVANIA

WOODSIDE AREA 1 SEWERS

DRAWN BY	DATE	JOB NO.	SHEET NO.
TEB	6/2014	2008-418	A-2
CHECKED BY	SCALE	SURVEY BK.	
DP	NOTED		

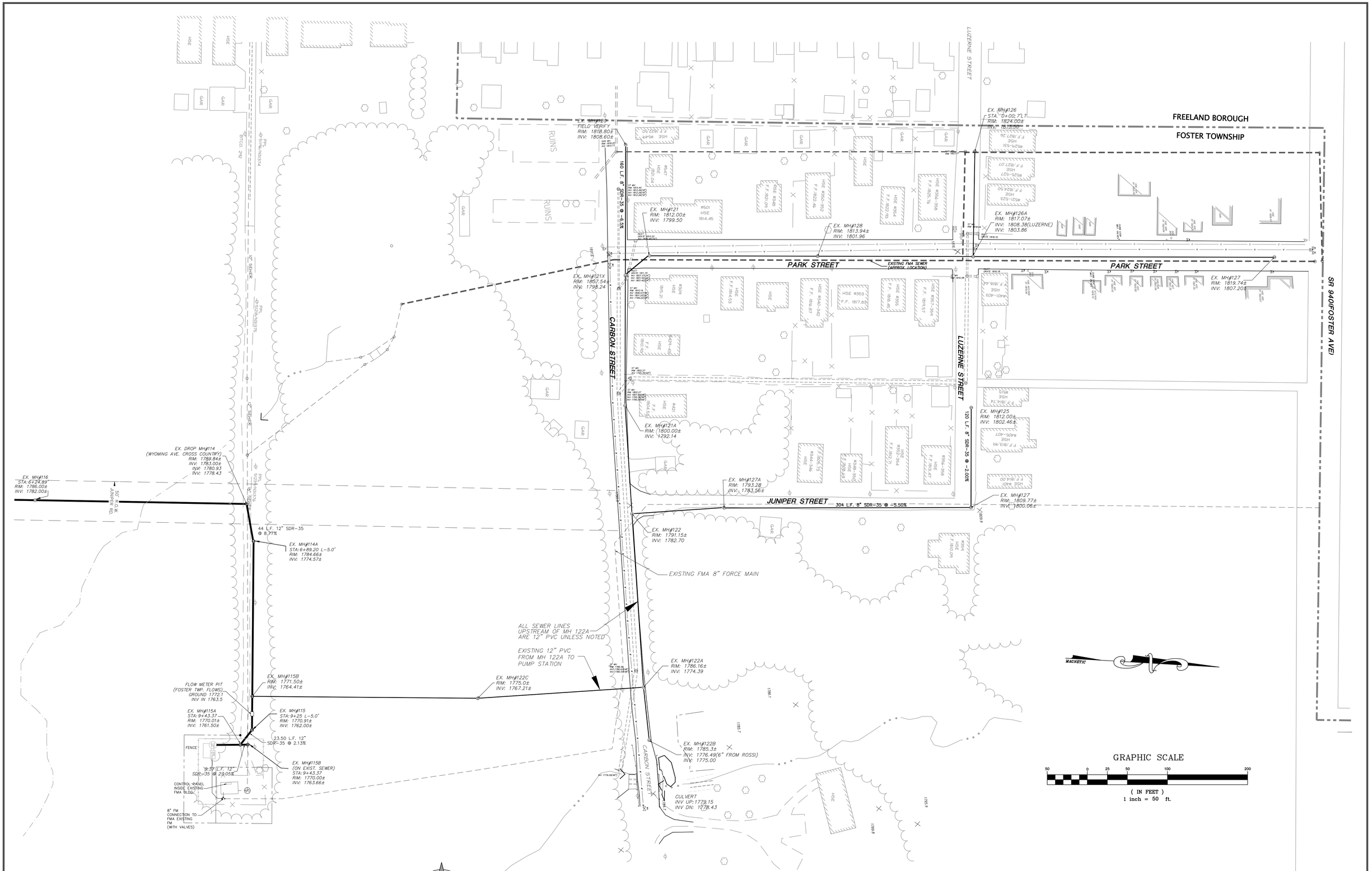

PENNEASTERN ENGINEERS, L.L.C.
165 north wilkes-barre boulevard, wilkes-barre, pennsylvania, 18702 phone: (570) 208-3130

REVISIONS

FOSTER TOWNSHIP SEWER PROJECT
FOSTER TOWNSHIP – LUZERNE COUNTY – PENNSYLVANIA

WOODSIDE AREA 2 SEWERS

DRAWN BY	DATE	JOB NO.	SHEET NO.
TEB	6/2014	2008-418	A-3
CHECKED BY	SCALE	SURVEY BK.	
DP	NOTED		

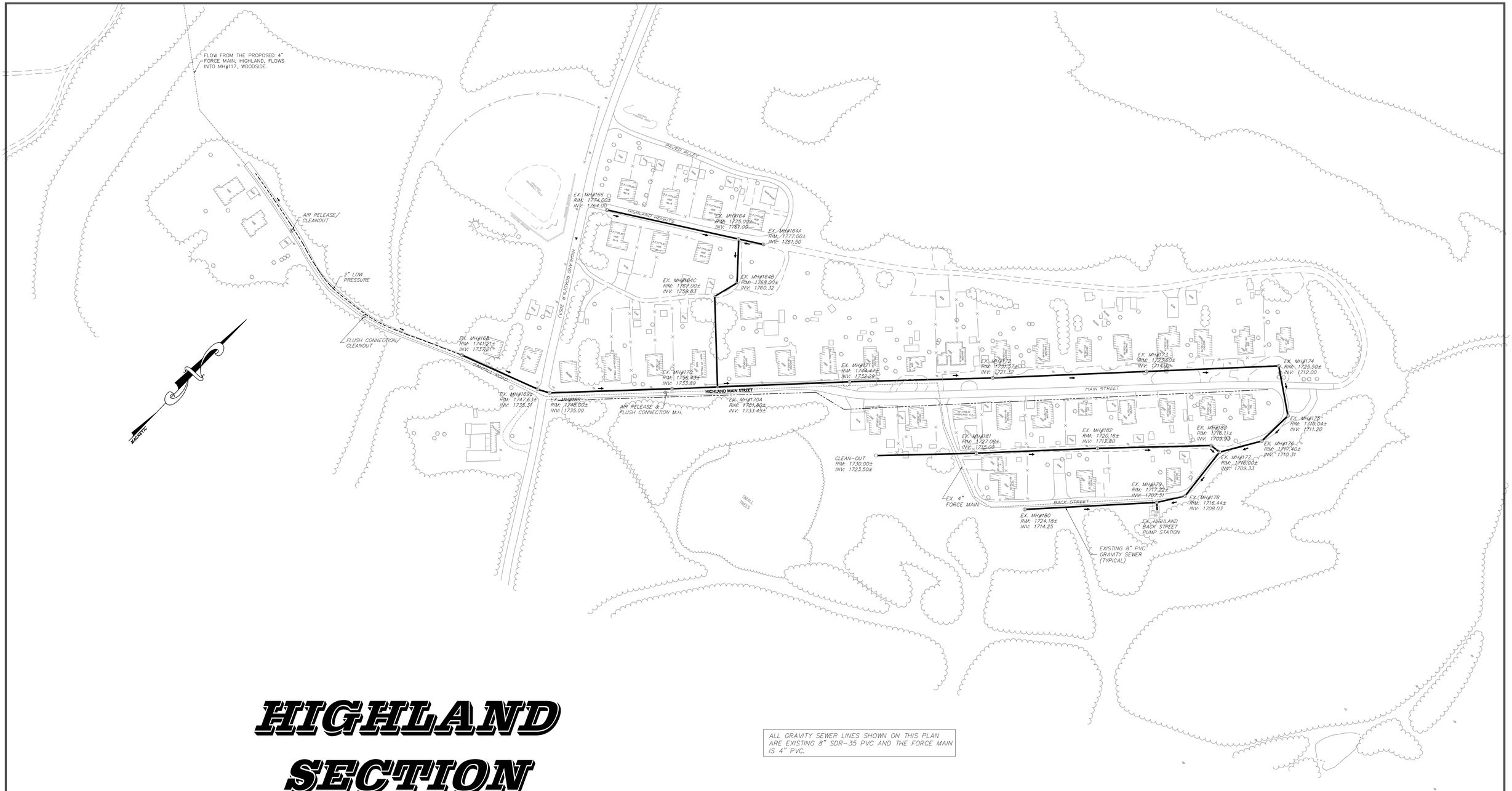

HIGHLAND SECTION

ALL GRAVITY SEWER LINES SHOWN ON THIS PLAN ARE EXISTING 8" SDR-35 PVC AND THE FORCE MAIN IS 4" PVC.

GRAPHIC SCALE

100 0 50 100 200 400

(IN FEET)
1 inch = 100 ft.

PENNEASTERN ENGINEERS, LLC.
165 north wilkes-barre boulevard, wilkes-barre, pennsylvania, 18702 phone: (570) 208-3130

REVISIONS

FOSTER TOWNSHIP SEWER PROJECT
FOSTER TOWNSHIP – LUZERNE COUNTY – PENNSYLVANIA

HIGHLAND AREA SEWERS

DRAWN BY	DATE	JOB NO.	SHEET NO.
TEB	6/2014	2008-418	A-4
CHECKED BY	SCALE	SURVEY BK.	
DP	NOTED		

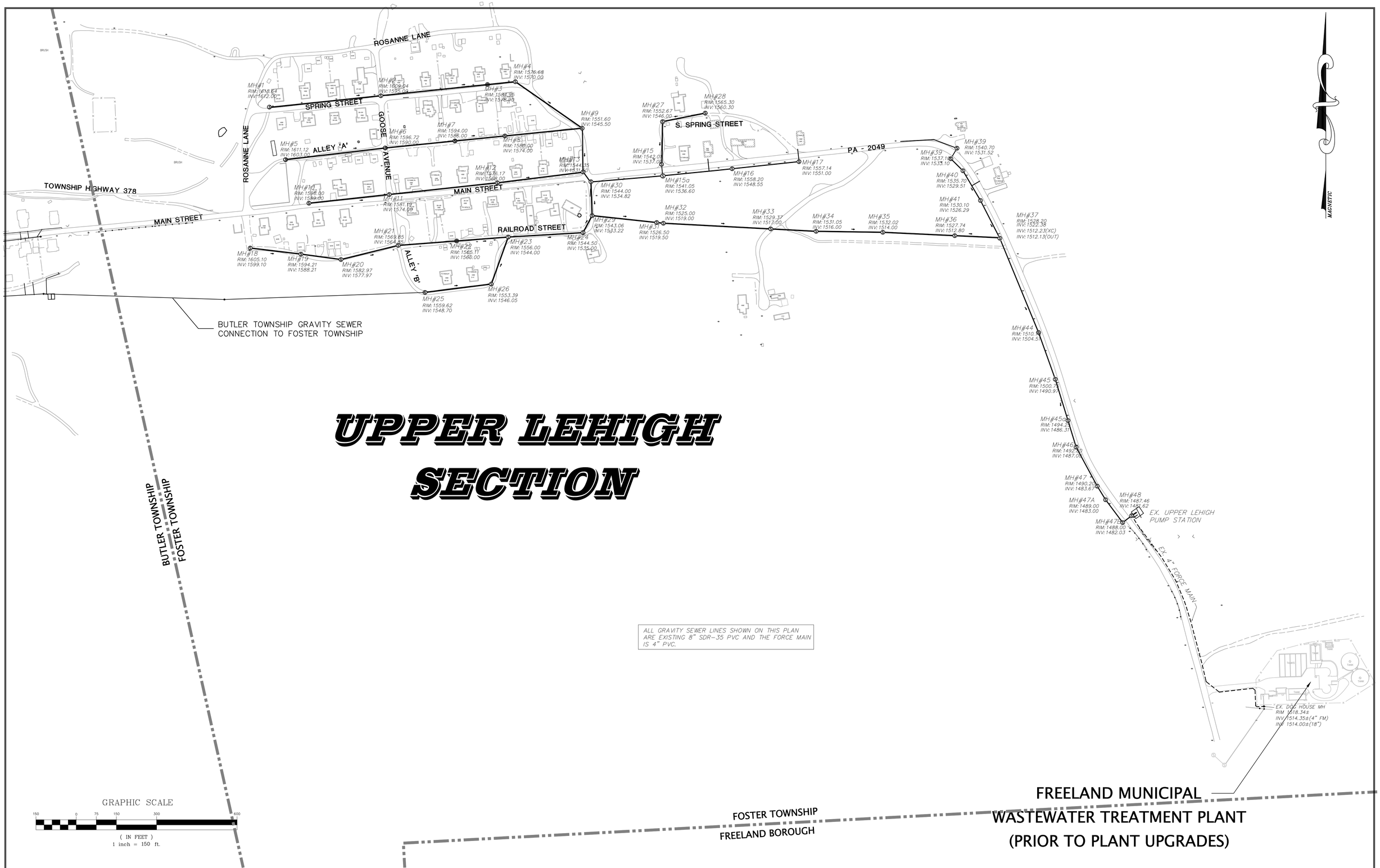

UPPER LEHIGH SECTION

PENNEASTERN ENGINEERS, LLC.
165 north wilkes-barre boulevard, wilkes-barre, pennsylvania, 18702 phone: (570) 208-3130

REVISIONS

FOSTER TOWNSHIP SEWER PROJECT
FOSTER TOWNSHIP – LUZERNE COUNTY – PENNSYLVANIA

UPPER LEHIGH AREA SEWERS

DRAWN BY	DATE	JOB NO.	SHEET NO.
TEB	6/2014	2008-418	A-5
CHECKED BY	SCALE	SURVEY BK.	
DP	NOTED		

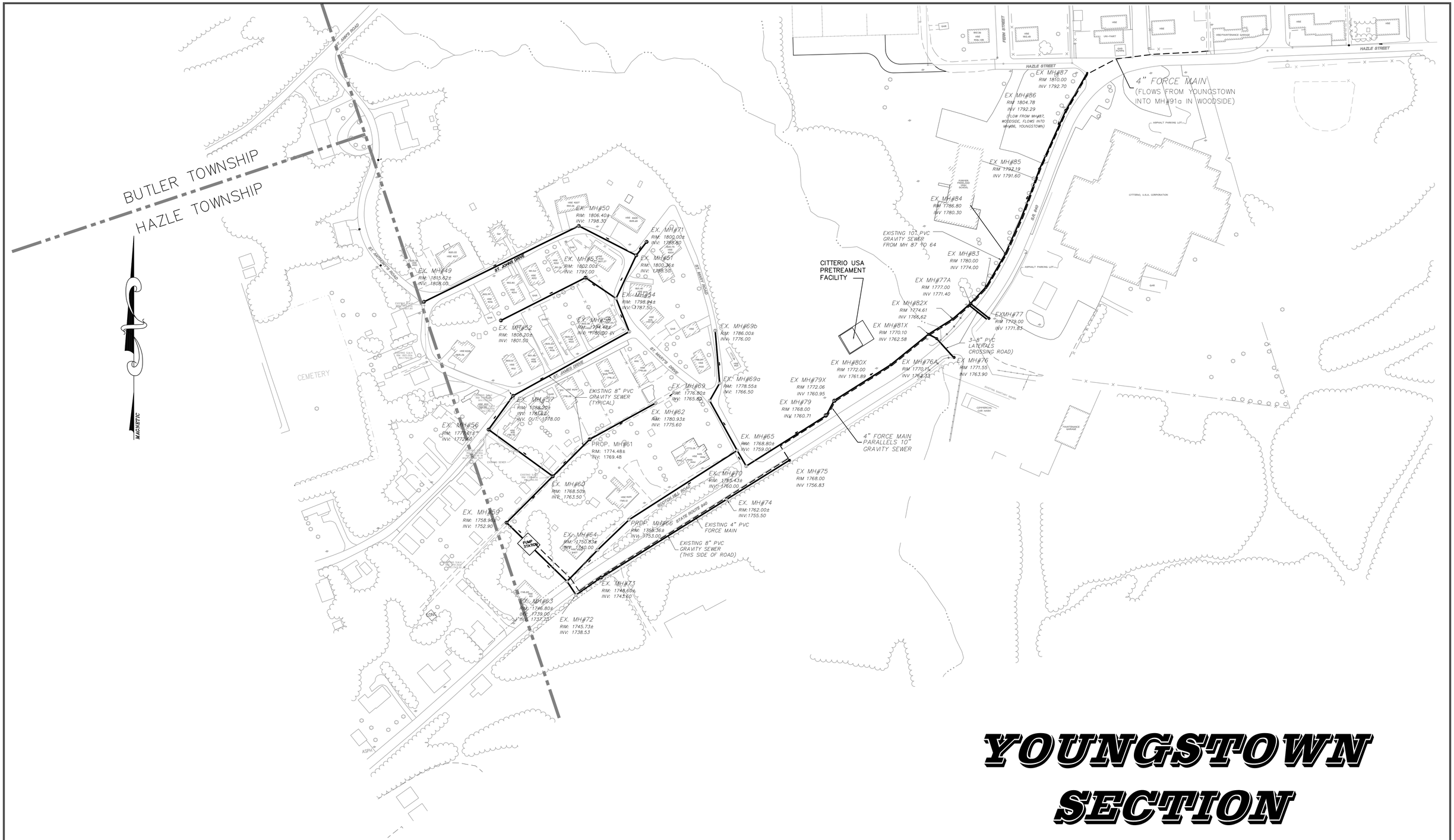

YOUNGSTOWN SECTION

GRAPHIC SCALE

100 0 50 100 200 400

(IN FEET)
1 inch = 100 ft.

PENNEASTERN ENGINEERS, LLC.
165 north wilkes-barre boulevard, wilkes-barre, pennsylvania, 18702 phone: (570) 208-3130

REVISIONS

FOSTER TOWNSHIP SEWER PROJECT
FOSTER TOWNSHIP – LUZERNE COUNTY – PENNSYLVANIA

YOUNGSTOWN AREA SEWERS

DRAWN BY	DATE	JOB NO.	SHEET NO.
TEB	6/2014	2008-418	A-6
CHECKED BY	SCALE	SURVEY BK.	
DP	NOTED		

Pennsylvania-American Water Company's Responses to
the Bureau of Technical Utility Services
Water/Wastewater Division
Data Request Set 1

Docket No. A-2021-3028676

Application of Pennsylvania-American Water Company-Wastewater Division for approval of the rights to: (1) acquire, by sale, certain wastewater system assets of Foster Township; and (2) begin to offer, render, furnish and supply wastewater service to the public in portions of Foster Township, Luzerne County, Pennsylvania

A-28. Please provide a breakdown, including a description, year, estimated costs, and sources of funds (i.e., debt or equity), of PAWC-WD's expected additional capital requirements for the West End System for the next five years which may include, but is not limited to, the cost of new flow meters at the Authority and Butler interconnections, SCADA, etc.

Response: Please see the projected CAPEX for the first five years of ownership. A conditioned based assessment will be performed in the first year of system ownership including a new flow meters assessment.

Year after closing		**1**	**2**	**3**	**4**	**5**
Identified projects						
Condition based assessment		$ 89,520				
Targeted I/I improvements			$ 187,000	$ 187,000	$ 187,000	$ 187,000
SCADA		$ 60,000	$ 62,400	$ 31,200		
Pump station improvements		$ 70,000	$ 140,000			
Safety, Security		$ 60,000				
Reoccuring capital projects		$ 44,000	$ 44,000	$ 44,000	$ 44,000	$ 44,000
TOTAL		**$323,520**	**$433,400**	**$262,200**	**$231,000**	**$231,000**

Name: Michael Salvo
Title: Senior Manager, Business Development

Pennsylvania-American Water Company's Responses to
the Bureau of Technical Utility Services
Water/Wastewater Division
Data Request Set 1

Docket No. A-2021-3028676

Application of Pennsylvania-American Water Company-Wastewater Division for approval of the rights to: (1) acquire, by sale, certain wastewater system assets of Foster Township; and (2) begin to offer, render, furnish and supply wastewater service to the public in portions of Foster Township, Luzerne County, Pennsylvania

A-29. Please identify any operational and/or managerial changes PAWC-WD intends to make after acquiring the West End System.

Response: PAWC plans to utilize Foster Township's current contractor, Environmental Services Corp. of PA (ESC) to inspect and maintain the wastewater collection system and pump stations. PAWC will provide daily management, oversight and assistance from its Berwick District.

Name: Michael Salvo
Title: Senior Manager, Business Development

Pennsylvania-American Water Company's Responses to
the Bureau of Technical Utility Services
Water/Wastewater Division
Data Request Set 1

Docket No. A-2021-3028676

Application of Pennsylvania-American Water Company-Wastewater Division for approval of the rights to: (1) acquire, by sale, certain wastewater system assets of Foster Township; and (2) begin to offer, render, furnish and supply wastewater service to the public in portions of Foster Township, Luzerne County, Pennsylvania

A-30. Please explain how West End System customers receive water service and identify the entities providing water service to West End System customers.

Response: West End System customers' water service is provided by the Borough of Freeland Municipal Authority. Additionally, one customer, Citterio water is provided by both the Borough of Freeland Municipal Authority and Hazleton City Authority.

Name: Michael Salvo
Title: Senior Manager, Business Development

Pennsylvania-American Water Company's Responses to
the Bureau of Technical Utility Services
Water/Wastewater Division
Data Request Set 1

Docket No. A-2021-3028676

Application of Pennsylvania-American Water Company-Wastewater Division for approval of the rights to: (1) acquire, by sale, certain wastewater system assets of Foster Township; and (2) begin to offer, render, furnish and supply wastewater service to the public in portions of Foster Township, Luzerne County, Pennsylvania

A-31. Please identify the area, system, or operating division from which PAWC-WD intends to operate the West End System and the approximate distance, in miles, between the existing PAWC-WD area, system, or operating division and the West End System.

Response: PAWC will manage and support operations from its current Berwick District, which is approximately 20 miles from the West End System.

Name: Michael Salvo
Title: Senior Manager, Business Development

Pennsylvania-American Water Company's Responses to
the Bureau of Technical Utility Services
Water/Wastewater Division
Data Request Set 1

Docket No. A-2021-3028676

Application of Pennsylvania-American Water Company-Wastewater Division for approval of the rights to: (1) acquire, by sale, certain wastewater system assets of Foster Township; and (2) begin to offer, render, furnish and supply wastewater service to the public in portions of Foster Township, Luzerne County, Pennsylvania

A-32. On October 12, 2021, the Authority filed a letter with the Commission indicating the United States Environmental Protection Agency (EPA) mandated the Authority, Freeland, Foster and Butler adopt the same Industrial Pretreatment Program (IPP) ordinance. Please provide a copy of any correspondence from the EPA which indicates a requirement that Foster adopt an updated IPP ordinance. If the EPA is requiring Foster adopt an updated IPP ordinance, please provide an amendment to the Application's Appendix T replacing Foster's Ordinance No. 2 of 2013 with an ordinance that complies with any EPA requirements.

Response: This letter was requested from the Authority, but it has not yet been provided to Foster or PAWC. PAWC will supplement this response upon receipt of the letter. Foster is currently reviewing its options with regards to an updated Ordinance.

Name: Michael Salvo
Title: Senior Manager, Business Development

Application of Pennsylvania-American Water Company-Wastewater Division for approval of the rights to: (1) acquire, by sale, certain wastewater system assets of Foster Township; and (2) begin to offer, render, furnish and supply wastewater service to the public in portions of Foster Township, Luzerne County, Pennsylvania

Docket No. A-2021-3028676

VERIFICATION

I, Michael Salvo, hereby state that the facts set forth in the foregoing responses to the data requests from the Bureau of Technical Utility Services dated December 17, 2021, specifically A-1 through A-3, A-5 through A-7, A-8-d and e, A-9-d, A-11-b, c and d, A-13, A-14, A-17, A-19, A-24, A-26 through A-32, are true and correct to the best of my knowledge, information, and belief, and that I expect to be able to prove the same at a hearing if held in this matter. I understand that the statements herein are made subject to the penalties of 18 Pa.C.S. § 4904 (relating to unsworn falsification to authorities).

Date: January 18, 2022

Michael Salvo
Senior Manager, Business Development
Pennsylvania-American Water Company

Application of Pennsylvania-American Water Company-Wastewater Division for approval of the rights to: (1) acquire, by sale, certain wastewater system assets of Foster Township; and (2) begin to offer, render, furnish and supply wastewater service to the public in portions of Foster Township, Luzerne County, Pennsylvania

Docket No. A-2021-3028676

Verification to Data Requests A-8-a, b and c; A-9-a, b and c; A-10; A-11-a; A-12; A-18; A-20; A-21; and A-25

VERIFICATION

I, Brittany Majewski, hereby state that the facts set forth in the foregoing responses to the data requests from the Bureau of Technical Utility Services dated December 17, 2021, are true and correct to the best of my knowledge, information, and belief, and that I expect to be able to prove the same at a hearing if held in this matter. I understand that the statements herein are made subject to the penalties of 18 Pa.C.S. § 4904 (relating to unsworn falsification to authorities).

Date: January 11, 2022

Brittany Majewski

Brittany Majewski
Municipal Secretary
Foster Township

Application of Pennsylvania-American Water Company-Wastewater Division for approval of the rights to: (1) acquire, by sale, certain wastewater system assets of Foster Township; and (2) begin to offer, render, furnish and supply wastewater service to the public in portions of Foster Township, Luzerne County, Pennsylvania

Docket No. A-2021-3028676

Verification to Data Requests A-4; A-15; A-16; A-22; and A-23

VERIFICATION

I, Thomas E. Barna, Jr., P.E., hereby state that the facts set forth in the foregoing responses to the data requests from the Bureau of Technical Utility Services dated December 17, 2021, are true and correct to the best of my knowledge, information, and belief, and that I expect to be able to prove the same at a hearing if held in this matter. I understand that the statements herein are made subject to the penalties of 18 Pa.C.S. § 4904 (relating to unsworn falsification to authorities).

Date: January 13th, 2022

Thomas E. Barna, Jr.

Thomas E. Barna, Jr., P.E.
Professional Engineer #PE074831
PennEastern Engineers, LLC
Municipal Engineer for Foster Township

BEFORE THE
PENNSYLVANIA PUBLIC UTILITY COMMISSION

Application of Pennsylvania-American Water Company- Wastewater Division for approval of the rights to: (1) acquire, by sale, certain wastewater system assets of Foster Township; and (2) begin to offer, render, furnish and supply wastewater service to the public in portions of Foster Township, Luzerne County, Pennsylvania	: : : : : :	Docket No. A-2021-3028676

CERTIFICATE OF SERVICE

I hereby certify that I have this day served a true copy of **Pennsylvania-American Water Company's Responses to the Bureau of Technical Utility Services Data Request Set 1**, upon the parties listed below, in the manner specified below, in accordance with the requirements of 52 Pa. Code § 1.54 (relating to service by a party):

VIA Electronic Delivery

Richard A. Kanaskie
Director and Chief Prosecutor
PA Public Utility Commission
Bureau of Investigation and Enforcement
400 North Street, 2nd Floor West
Harrisburg, PA 17120
rkanaskie@pa.gov

Patrick Cicero
Acting Consumer Advocate
Pennsylvania Office of Consumer Advocate
555 Walnut Street
5th Floor, Forum Place
Harrisburg, PA 17101-1923
pcicero@paoca.org

Teresa Reed Wagner
Executive Director
Small Business Advocate
PA Office of Small Business Advocate
Forum Place
555 Walnut Street, 1st Floor
Harrisburg, PA 17101
tereswagne@pa.gov

Date: January 18, 2022

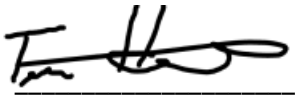

Teresa K. Harrold, Director, Corporate Counsel
Pennsylvania-American Water Company
852 Wesley Drive
Mechanicsburg, PA 17055
717.550.1562 (bus)
717.550.1255 (fax)
teresa.harrold@amwater.com