DISTRICT	COUNTY	TOWNSHIP	BOROUGH	ROUTE	SECTION	TOTAL SHEETS
12-0	WESTMORELAND	ROSTRAVER	———	0070	E10	436
		SOUTH HUNTINGDON				

ECMS: 75978

COMMONWEALTH OF PENNSYLVANIA

DEPARTMENT OF TRANSPORTATION

DRAWINGS
FOR

CONSTRUCTION

OF

STATE ROUTE 0070 **SECTION** E10

IN WESTMORELAND **COUNTY**

FROM STA. 252+20.00 TO STA. 404+00.00 LENGTH 15,080.00 FT. 2.856 MI.
FROM SEG. 0450 OFFSET 1381 TO SEG. 0480 OFFSET 0751
FROM SEG. 0451 OFFSET 1381 TO SEG. 0481 OFFSET 0729

ALSO

STATE ROUTE 8024

ALSO

STATE ROUTE 0051

FROM STA. 759+60.00 TO STA. 841+25.00
FROM SEG. 0030 OFFSET 2211 TO SEG. 0070 OFFSET 0667
FROM SEG. 0031 OFFSET 2235 TO SEG. 0071 OFFSET 0713

SCALE
HORIZONTAL 0 25 50 FEET
VERTICAL 0 5 10 FEET

PUC APPLICATION DOCKET NO. A-2019-3009782

DESIGN DESIGNATION

HIGHWAY CLASSIFICATION	– URBAN INTERSTATE / FREEWAY	CURRENT A.D.T. - 35,504 (2022)
ROADWAY TYPOLOGY	– LIMITED ACCESS FREEWAY / URBAN INTERSTATE	DESIGN YEAR A.D.T. - 45,562 (2045)
DESIGN SPEED	– 70 MPH	D.H.V. - 4,101
PAVEMENT WIDTH	– 24'-0" (EACH DIRECTION)	D - 54%
SHOULDER WIDTH	– 4'-0" (INSIDE) 12'-0" (OUTSIDE)	T - 30%
MEDIAN WIDTH	– 10'-0"	

CERTIFIED CORRECT PLANS
David R. Hill
Professional Engineer
Approved by Bureau of Technical Utility Services
PA PUBLIC UTILITY COMMISSION
ATTEST Secretary

ALSO INCLUDED:

CONCEPTUAL TRAFFIC CONTROL PLAN		349 SHEETS
SIGNING AND PAVEMENT MARKING PLAN		72 SHEETS
SEWER RELOCATION AND EXTENSION PLAN		16 SHEETS
EROSION AND SEDIMENT POLLUTION CONTROL PLAN		135 SHEETS
HIGHWAY LIGHTING PLAN		16 SHEETS
TRAFFIC SIGNAL PLAN		27 SHEETS
ITS PLAN		21 SHEETS
TEMPORARY ITS PLAN		8 SHEETS
SOIL PROFILE PLAN		194 SHEETS
STRUCTURE PLANS		
S-40008	S.R. 0070 OVER CEDAR CREEK	13 SHEETS
S-40009	S.R. 0070 OVER CEDARBROOK GOLF COURSE TUNNEL	16 SHEETS
S-40010	S.R. 0070 OVER TRIBUTARY	12 SHEETS
S-40011	S.R. 0070 OVER YOUGHIOGHENY RIVER, CSX RAILROAD, T-373 AND YOUGHIOGHENY TRAIL	19 SHEETS
S-40007	S.R. 0051 OVER S.R. 0070	72 SHEETS
S-40006	S.R. 0051 OVER CEDAR CREEK	6 SHEETS
	W&LE RAILROAD OVER S.R. 0051	44 SHEETS
	W&LE RAILROAD OVER CEDAR CREEK	18 SHEETS
S-40192	CENTER-MOUNT DMS STRUCTURE	5 SHEETS
CROSS SECTIONS		287 SHEETS
EXISTING STRUCTURE PLANS		
S-707	S.R. 0070 OVER CEDAR CREEK	1 SHEET
S-17903	S.R. 0070 OVER GOLF COURSE TUNNEL	5 SHEETS
S-705	S.R. 0070 OVER TRIBUTARY	1 SHEET
S-1445	S.R. 0070 OVER YOUGHIOGHENY RIVER	17 SHEETS
S-23335	S.R. 0070 OVER YOUGHIOGHENY RIVER	157 SHEETS
S-1440	S.R. 0051 OVER S.R. 0070	5 SHEET
S-17176	S.R. 0051 OVER S.R. 0070	14 SHEETS
S-30453	S.R. 0051 OVER S.R. 0070	4 SHEET
S-1150	CONCRETE PILES	1 SHEET
S-3277	S.R. 0051 OVER CEDAR CREEK	7 SHEETS
S-17769	S.R. 0051 OVER CEDAR CREEK	4 SHEETS
	RAILROAD OVER S.R. 0051 & CEDAR CREEK	9 SHEETS
S-30388	DMS CENTER-MOUNT SIGN STRUCTURE	2 SHEETS

ESTABLISHED AS A LIMITED ACCESS HIGHWAY FROM STATION 252+20.00 TO STATION 268+88.00 BY PLAN OF LEGISLATIVE ROUTE 64144, SECTION LA APPROVED SEPTEMBER 10, 1957.

REESTABLISHED AS A LIMITED ACCESS HIGHWAY FROM STATION 268+88.00 TO STATION 366+53.00 BY PLAN OF SR 0070, SECTION E10 R/W, APPROVED AUGUST 5, 2021.

ESTABLISHED AS A LIMITED ACCESS HIGHWAY FROM STATION 366+53.00 TO STATION 378+14.05 BY PLAN OF LEGISLATIVE ROUTE 64144, SECTION 7E APPROVED NOVEMBER 3, 1955.

REESTABLISHED AS A LIMITED ACCESS HIGHWAY FROM STATION 378+14.05 TO STATION 404+00.00 BY PLAN OF SR 0070, SECTION A01 R/W APPROVED JULY 20, 2009.

PREPARED BY
Gannett Fleming
PITTSBURGH, PA

COMMONWEALTH OF PENNSYLVANIA REGISTERED PROFESSIONAL ENGINEER BREHAN ELIZABETH MCBRIDE No. PE062930

Brehan E. McBride
REG. PROF. ENGINEER
1/6/2022
DATE

RECOMMENDED Jan 19 20 22
William L. Kovach
DISTRICT EXECUTIVE

RECOMMENDED January 26, 2022
Michael C. Kenis, P.E.
DEPUTY SECRETARY

APPROVED January 26, 2022
SECRETARY OF TRANSPORTATION
(ON BEHALF OF THE GOVERNOR AS WELL AS THE SECRETARY)

FILE: pw:\\gfnet-pw.bentley.com:gfnet-pw-01\Documents\Projects\61636\OUTPUT\COMP_01\CIVIL\ROAD\SR70-E10 Title.dgn
DATE: 1/6/2022 TIME: 12:21:01 PM

DISTRICT	COUNTY	ROUTE	SECTION	SHEET
12-0	WESTMORELAND	0070	E10	9 OF 436
ROSTRAVER AND SOUTH HUNTINGDON TOWNSHIPS				
REVISION NUMBER	REVISIONS		DATE	BY

TABULATION OF STATION EQUALITIES

NONE

TABULATION OF OVERALL LENGTH

STA. 252+20.00 TO STA. 404+00.00 = 15180.00 FT.
= 2.875 MI.

TABULATION OF CONSTRUCTION LENGTH

STA. 252+70.00 TO STA. 403+50.00 = 15080.00 FT.
= 2.856 MI.

LIMIT OF WORK
STA. 252+20.00
SEG. 0450 OFFSET 1381
SEG. 0451 OFFSET 1381
S.R. 0070 SEC E10
ROSTRAVER TOWNSHIP
WESTMORELAND COUNTY

LIMIT OF WORK
STA. 404+00.00
SEG. 0480 OFFSET 0751
SEG. 0481 OFFSET 0729
S.R. 0070 SEC E10
SOUTH HUNTINGDON TOWNSHIP
WESTMORELAND COUNTY

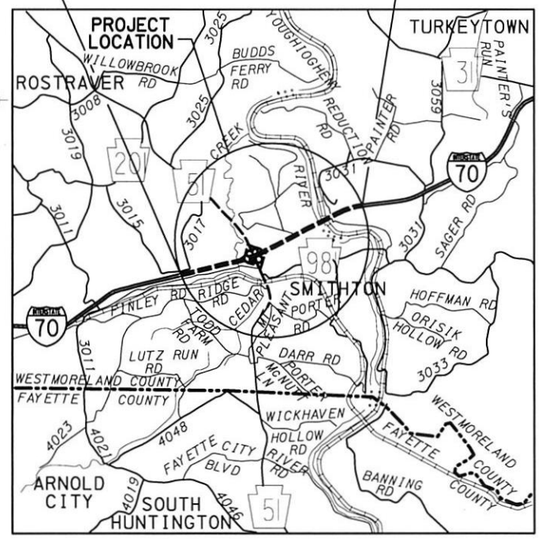

SCALE IN MILES
1 0 1 2

LEGEND
- PROJECT LOCATION
- INTERSTATE HIGHWAYS
- STATE HIGHWAYS
- LOCAL ROADS
- RAILROAD
- RIVER

LIST OF PUBLIC UTILITIES

—CTV— / —CTVU—
COMCAST
1530 CHARTIERS AVE
PITTSBURGH, PA 15204
ATTN: TIM GAZDA
PHONE: 412-875-1388

—E— / —EU— / —E—
WEST PENN POWER
800 CABIN HILL DRIVE
GREENSBURG, PA 15601
ATTN: BRAD HERRINGTON
PHONE: 724-830-2964

—G— / —G—
COLUMBIA GAS OF PA
1452 GUN CLUB ROAD
UNIONTOWN, PA 15401
ATTN: GARRETT HENRY
PHONE: 724-550-3911

—S— / —S—
ROSTRAVER TOWNSHIP
SEWAGE AUTHORITY
1744 ROSTRAVER ROAD
BELLE VERNON, PA 15012
ATTN: ANN C. SCOTT
PHONE: 724-930-7667

—T— / —TU—
VERIZON PA, LLC
41 EAST BEAU STREET
WASHINGTON, PA 15301
ATTN: KEITH FOWLER
PHONE: 724-229-0695

—T1—
EXTENET SYSTEM INC.
3030 WARRENVILLE ROAD
LISLE, IL 60532
ATTN: JOSEPH BZOREK
PHONE: 724-355-4208

—W—
MUNICIPAL AUTHORITY OF
WESTMORELAND COUNTY
P.O. BOX 730
GREENSBURG, PA 15601
ATTN: DON GUERRA
PHONE: 724-755-5951

—CTV— / —CTVU—
ATLANTIC BROADBAND
320 BAILEY AVENUE
UNIONTOWN, PA 15401
ATTN: ERIC TEETER
PHONE: 724-439-1233

PA. ONE CALL SYSTEM INC. SERIAL NO.

PRELIMINARY DESIGN
20170200288 ON 1/20/2017 FOR ROSTRAVER TOWNSHIP
20170200287 ON 1/20/2017 FOR SOUTH HUNTINGDON TOWNSHIP

FINAL DESIGN
20212571358 ON 9/14/2021 FOR ROSTRAVER TOWNSHIP (SR 70)
20212571425 ON 9/14/2021 FOR SOUTH HUNTINGDON TOWNSHIP (SR 70)
20212571387 ON 9/14/2021 FOR ROSTRAVER TOWNSHIP (SR 51)

CERTIFIED CORRECT PLANS
Daniel R. Hallinan
Professional Engineer
Approved by Bureau of Technical Utility Services
PA PUBLIC UTILITY COMMISSION
ATTEST Rosemary Chiavetta
Secretary

EARTHWORK SUMMARY NOTES

(1) CLASS 1 EXCAVATION:

EXCLUDED FROM THE TABULATION OF QUANTITIES SHEETS:
- 35,229 CY PART OF PIPE PAY ITEMS (FOR INFORMATION ONLY)
- 131,550 CY PART OF LUMP SUM SWM ITEMS
- 48,024 CY PART OF THE CONCEPTUAL TRAFFIC CONTROL PLAN
- 29,430 CY PART OF CLEARING AND GRUBBING

244,233 CY TOTAL

(2) CLASS 3 EXCAVATION:
- 12,732 CY PART OF LUMP SUM STRUCTURE ITEMS

12,732 CY TOTAL

(3) EMBANKMENT:
- 6,717 CY PART OF PIPE PAY ITEMS (FOR INFORMATION ONLY)
- 3,325 CY PART OF LUMP SUM SWM ITEMS
- 2,092 CY PART OF LUMP SUM STRUCTURE ITEMS
- 19,167 CY PART OF THE TRAFFIC CONTROL PLAN

31,301 CY TOTAL

(4) TOPSOIL INCLUDES:
- 35,169 CY OF TOPSOIL FURNISHED AND PLACED
- 23,544 CY OF PLACING STOCKPILED TOPSOIL (FROM CLEARING AND GRUBBING)

(5) SELECTED BORROW EXCAVATION ROCK INCLUDES:
- 91,966 CY OF SELECTED BORROW EXCAVATION - 206 ROCK, SANDSTONE
- 1,564 CY OF SELECTED BORROW EXCAVATION ROCK, CLASS R-3
- 15,425 CY OF SELECTED BORROW EXCAVATION ROCK, CLASS R-4
- 40 CY OF SELECTED BORROW EXCAVATION ROCK, CLASS R-6
- 6 CY OF SELECTED BORROW EXCAVATION ROCK, CLASS R-6 - WITH GROUT AND STREAMBED MATERIAL
- 162 CY OF SELECTED BORROW EXCAVATION ROCK, CLASS R-8 - WITH GROUT AND STREAMBED MATERIAL

(6) COARSE AGGREGATE INCLUDES:
- 31,043 CY OF NO. 1 COARSE AGGREGATE
- 133 CY OF NO. 4 COARSE AGGREGATE (PART OF LUMP SUM STRUCTURE ITEMS)
- 74 CY OF NO. 8 COARSE AGGREGATE (PART OF LUMP SUM SWM ITEMS)
- 6,117 CY OF NO. 2A COARSE AGGREGATE
  - 3,066 CY PART OF LUMP SUM STRUCTURE ITEMS
- 24,828 CY OF NO. 57 COARSE AGGREGATE
  - 404 CY PART OF LUMP SUM STRUCTURE ITEMS
  - 11,600 CY PART OF LUMP SUM SWM ITEMS
- 693 CY OF NO. 3 COARSE AGGREGATE
  - 352 CY PART OF LUMP SUM SWM ITEMS

(7) SELECTED BORROW EXCAVATION, STRUCTURE BACKFILL:
- 15,686 CY PART OF LUMP SUM STRUCTURE ITEMS

15,686 CY TOTAL

(8) AMENDED SOIL / PLANTING MIX:
- 8,248 CY PART OF LUMP SUM SWM ITEMS

8,248 CY TOTAL

(9) WASTE
- 300,809 CY FROM EARTHWORK ANALYSIS
- 10,776 CY FROM CLASS 1B EXCAVATION (TEMPORARY PAVEMENT REMOVAL)
- 1,984 CY FROM CLASS 1 EXCAVATION - RESIDUAL WASTE
- 246 CY FROM CLASS 2 EXCAVATION - RESIDUAL WASTE

313,815 CY TOTAL

EARTHWORK SUMMARY ENTIRE PROJECT

THE INFORMATION ON ESTIMATED AMOUNTS OF EARTHWORK HAS BEEN USED IN THE PRELIMINARY ESTIMATE.
DO NOT USE AS A WAIVER OF ANY PROVISIONS OF THE SPECIFICATIONS AND CONTRACTS.

CUBIC YARDS OF EXCAVATION										CUBIC YARDS OF COMPLETED EMBANKMENT*	CUBIC YARDS OF TOPSOIL	CUBIC YARDS OF FOREIGN BORROW	CUBIC YARDS OF SELECTED BORROW ROCK	CUBIC YARDS OF COARSE AGGREGATE	CUBIC YARDS OF STRUCTURE BACKFILL	CUBIC YARDS OF AMENDED SOIL	CUBIC YARDS OF RAILROAD SUB-BALLAST	CUBIC YARDS OF WASTE
CLASS 1	CLASS 1 PAVEMENT AND SLAG	CLASS 1 HISTORIC FILL	CLASS 1 RESIDUAL WASTE	CLASS 1B	CLASS 2	CLASS 2 HISTORIC FILL	CLASS 2 RESIDUAL WASTE	CLASS 3	CLASS 4									
510,653	78,710	10,533	1,984	10,776	9,842	3,944	246	12,732	20,955	371,560	58,713	25,000	109,163	62,888	15,686	8,248	1,804	313,815
(1)				□				(2)	△	(3)	(4)	○	(5)	(6)	(7)	(8)		(9)

* EXCLUDES ALL SELECTED BORROW ITEMS. INCLUDES CLASS 1 EXCAVATION - EXISTING PAVEMENT AND SLAG REMOVAL BEING PLACED IN THE SLAG / EMBANKMENT AREAS.

△ INCLUDES 20,955 CY IN PIPE PAY ITEMS (FOR INFORMATION ONLY)

□ INCLUDES 8,108 CY FROM THE CONCEPTUAL TRAFFIC CONTROL PLAN, SEE CONCEPTUAL TCP TABULATION OF QUANTITIES

○ FOREIGN BORROW IS REQUIRED DUE TO PHASING OF THE PROJECT. SOME EXCAVATION CAN BE PERFORMED PRIOR TO EMBANKMENT CONSTRUCTION. HOWEVER, FOREIGN BORROW MATERIAL WILL BE REQUIRED EARLY IN THE CONSTRUCTION OF THE PROJECT.

COMMONWEALTH OF PENNSYLVANIA
REGISTERED PROFESSIONAL
BRENAN ELIZABETH MCBRIDE
ENGINEER

FILE: pw:\\dfnet-pw.ben1gov.com:dfnet-pw01\Documents\Projects\61636\OUTPUT\COMP_01\CIVIL\ROAD\SR70-E10 Locmap.dgn
DATE: 9/9/2022 TIME: 9:21:57 AM

DISTRICT	COUNTY	ROUTE	SECTION	SHEET
12-0	WESTMORELAND	0070	E10	10 OF 436
ROSTRAVER AND SOUTH HUNTINGDON TOWNSHIPS				

REVISION NUMBER	REVISIONS	DATE	BY

GENERAL NOTES

THE LEGAL RIGHT-OF-WAY ON SR 0070, FORMERLY LR 64144, FROM STATION 252+20.00 TO STATION 268+88.00 IS 122 FEET BASED ON PLAN OF LR 64144, SECTION LA, SIGNED ON SEPTEMBER 10, 1957, AND RECORDED ON MARCH 4, 1958, IN THE WESTMORELAND COUNTY RECORDER'S OFFICE IN PLAN BOOK 32, PAGES 1-118. REVISED AND RE-RECORDED IN THE WESTMORELAND COUNTY RECORDER'S OFFICE IN PLAN BOOK 40, PAGE 1.

THE LEGAL RIGHT-OF-WAY ON SR 0070, FORMERLY LR 64144, FROM STATION 268+88.00 TO STATION 366+53.00 IS VARIABLE IN WIDTH BASED ON PLAN OF SR 0070, SECTION E10 R/W, SIGNED ON AUGUST 5, 2021, AND RECORDED ON AUGUST 18, 2021, IN THE WESTMORELAND COUNTY RECORDER'S OFFICE, INSTRUMENT NUMBER 202108180034211.

THE LEGAL RIGHT-OF-WAY ON SR 0070, FORMERLY LR 64144, FROM STATION 366+53.00 TO STATION 378+14.05 IS VARIABLE IN WIDTH BASED ON PLAN OF LR 64144, SECTION 7, SIGNED ON SEPTEMBER 7, 1955 AND RECORDED IN THE WESTMORELAND COUNTY RECORDER'S OFFICE.

THE LEGAL RIGHT-OF-WAY ON SR 0070, FORMERLY LR 64144, FROM STATION 378+14.05 TO STATION 404+00.00 IS VARIABLE IN WIDTH BASED ON PLAN OF SR 0070, SECTION A01 R/W, SIGNED ON JULY 20, 2009 AND RECORDED ON JULY 30, 2009 IN THE WESTMORELAND COUNTY RECORDER'S OFFICE, INSTRUMENT NUMBER 200907310030406.

THE LEGAL RIGHT-OF-WAY ON SR 8024 (RAMPS A, B, C & D) IS VARIABLE IN WIDTH BASED ON PLAN OF SR 0070, SECTION E10 R/W, SIGNED ON AUGUST 5, 2021, AND RECORDED ON AUGUST 18, 2021, IN THE WESTMORELAND COUNTY RECORDER'S OFFICE, INSTRUMENT NUMBER 202108180034211.

THE LEGAL RIGHT-OF-WAY ON SR 0051, FORMERLY LR 288, FROM STATION 759+60.00 TO STATION 775+42.48 IS VARIABLE IN WIDTH, FROM STATION 817+70.80 TO STATION 818+35.09 IS VARIABLE IN WIDTH ON THE RIGHT, FROM STATION 818+35.09 TO STATION 823+24.00 IS 140 FEET, AND FROM STATION 825+18.00 TO STATION 838+73.00 IS 140 FEET, BASED ON PLAN OF LR 288, SECTION 15 & 7, SIGNED ON AUGUST 2, 1958, AND RECORDED ON MAY 2, 1961, IN THE WESTMORELAND COUNTY RECORDER'S OFFICE IN HIGHWAY PLAN BOOK 7, PAGE 10.

THE LEGAL RIGHT-OF-WAY ON SR 0051, FORMERLY LR 64144, FROM STATION 775+42.48 TO STATION 796+33.27 IS VARIABLE IN WIDTH, FROM STATION 823+24.00 TO STATION 825+18.00 IS 140 FEET, AND FROM STATION 838+73.00 TO STATION 840+00.00 IS 140 FEET BASED ON PLAN OF SR 0070, SECTION E10 R/W, SIGNED ON AUGUST 5, 2021, AND RECORDED ON AUGUST 18, 2021, IN THE WESTMORELAND COUNTY RECORDER'S OFFICE, INSTRUMENT NUMBER 202108180034211.

THE LEGAL RIGHT-OF-WAY ON SR 0051, FORMERLY LR 288, FROM STATION 796+33.27 TO STATION 817+70.80 IS VARIABLE IN WIDTH AND FROM STATION 817+70.80 TO STATION 818+35.09 IS VARIABLE IN WIDTH ON THE LEFT BASED ON PLAN OF LR 288, SECTION 6, SIGNED ON APRIL 13, 1954, AND RECORDED IN THE WESTMORELAND COUNTY RECORDER'S OFFICE.

THE LEGAL RIGHT-OF-WAY ON SR 0981, FORMERLY LR 64144, FROM STATION 50+42.00 TO STATION 52+91.00 IS VARIABLE IN WIDTH BASED ON PLAN OF SR 0070, SECTION E10 R/W, SIGNED ON AUGUST 5, 2021, AND RECORDED ON AUGUST 18, 2021, IN THE WESTMORELAND COUNTY RECORDER'S OFFICE, INSTRUMENT NUMBER 202108180034211.

THE LEGAL RIGHT-OF-WAY ON SR 0981, FORMERLY LR 64144, FROM STATION 52+91.00 TO STATION 54+17.00 IS 60 FEET BASED ON PLAN OF LR 288, SECTION 15 & 7, SIGNED ON AUGUST 2, 1958, AND RECORDED ON MAY 2, 1961, IN THE WESTMORELAND COUNTY RECORDER'S OFFICE IN HIGHWAY PLAN BOOK 7, PAGE 10.

THE LEGAL RIGHT-OF-WAY ON FINLEY ROAD, FORMERLY LR 64144, SECTION LA, SERVICE ROAD "S", FROM STATION 60+19.00 TO STATION 64+00.00 IS VARIABLE IN WIDTH BASED ON PLAN OF SR 0070, SECTION E10 R/W, SIGNED ON AUGUST 5, 2021, AND RECORDED ON AUGUST 18, 2021, IN THE WESTMORELAND COUNTY RECORDER'S OFFICE, INSTRUMENT NUMBER 202108180034211.

THE LEGAL RIGHT-OF-WAY ON RELOCATED FINLEY ROAD FROM STATION 71+00.00 TO STATION 85+27.03 IS VARIABLE IN WIDTH BASED ON PLAN OF SR 0070, SECTION E10 R/W, SIGNED ON AUGUST 5, 2021, AND RECORDED ON AUGUST 18, 2021, IN THE WESTMORELAND COUNTY RECORDER'S OFFICE, INSTRUMENT NUMBER 202108180034211.

THE LEGAL RIGHT-OF-WAY ON RIDGE ROAD FROM STATION 0+80.00 TO STATION 6+65.29 IS VARIABLE IN WIDTH BASED ON PLAN OF SR 0070, SECTION E10 R/W, SIGNED ON AUGUST 5, 2021, AND RECORDED ON AUGUST 18, 2021, IN THE WESTMORELAND COUNTY RECORDER'S OFFICE, INSTRUMENT NUMBER 202108180034211.

THE LEGAL RIGHT-OF-WAY ON WEST MCCLAIN ROAD, FORMERLY LR 64187, FROM STATION 802+95.00 TO STATION 802+98.00 IS 33 FEET, BASED ON THE ACT OF MAY 1, 1933, P.L. 103, SECTION 1105, AS AMENDED. IT HAS BEEN OPENED AND MAINTAINED FOR TWENTY-ONE (21) YEARS OR MORE BY ROSTRAVER TOWNSHIP, THEN A SECOND CLASS TOWNSHIP. ROSTRAVER TOWNSHIP BECAME A FIRST CLASS TOWNSHIP IN 1958. THERE IS NO PUBLIC RECORD OF ANY OTHER WIDTH.

THE LEGAL RIGHT OF WAY ON WEST MCCLAIN ROAD, FORMERLY LR 64187, FROM STATION 802+98.00 TO STATION 804+14.36 IS VARIABLE IN WIDTH BASED ON PLAN OF SR 0070, SECTION E10 R/W, SIGNED ON AUGUST 5, 2021, AND RECORDED ON AUGUST 18, 2021, IN THE WESTMORELAND COUNTY RECORDER'S OFFICE, INSTRUMENT NUMBER 202108180034211.

THE LEGAL RIGHT OF WAY ON SMITH ROAD, FORMERLY LR 64144, SECTION LA, SERVICE ROAD "T", FROM STATION 500+40.00 TO STATION 519+02.80 IS VARIABLE IN WIDTH BASED ON PLAN OF SR 0070, SECTION E10 R/W, SIGNED ON AUGUST 5, 2021, AND RECORDED ON AUGUST 18, 2021, IN THE WESTMORELAND COUNTY RECORDER'S OFFICE, INSTRUMENT NUMBER 202108180034211.

THE LEGAL RIGHT-OF-WAY ON CONCORD LANE, FORMERLY LR 288, IS VARIABLE IN WIDTH BASED ON PLAN OF SR 0070, SECTION E10 R/W, SIGNED ON AUGUST 5, 2021, AND RECORDED ON AUGUST 18, 2021, IN THE WESTMORELAND COUNTY RECORDER'S OFFICE, INSTRUMENT NUMBER 202108180034211.

THE LEGAL RIGHT-OF-WAY ON SKYLINE DRIVE IS 33 FEET BASED ON REPORT OF VIEWERS, CONFIRMED ON NOVEMBER 13, 1926, WESTMORELAND COUNTY COURT OF QUARTER SESSIONS, NO. 7, FEBRUARY TERM, 1925. FILED IN WESTMORELAND COUNTY RECORDER OF DEEDS OFFICE IN ROAD DOCKET (BOOK) 7, PAGES 39-40.

S.R. 0070 FORMERLY KNOWN AS L.R. 64144.

S.R. 0051 FORMERLY KNOWN AS L.R. 288.

S.R. 0981 FORMERLY KNOWN AS L.R. 64144.

LEGAL PRIVATE ACCESS. LAND ACQUIRED IN THE INTEREST DESIGNATED EASEMENT FOR DRIVEWAY PURPOSES FOR THE BENEFIT AND USE OF THE PROPERTY OR PROPERTIES DESIGNATED, ALONG WITH A TEMPORARY CONSTRUCTION EASEMENT FOR THE BENEFIT AND USE OF THE COMMONWEALTH, IF NECESSARY. TITLE SHALL VEST IN THE OWNERS OF THE DESIGNATED PROPERTIES UPON ACQUISITION AND MAINTENANCE RESPONSIBILITY SHALL TRANSFER UPON THE COMPLETION OF CONSTRUCTION, IF ANY.

TEMPORARY CONSTRUCTION EASEMENT. AN EASEMENT TO USE THE LAND AS NECESSARY DURING CONSTRUCTION OF THE PROJECT. THE EASEMENT IS REQUIRED ONLY UNTIL THE CONSTRUCTION OR WORK INDICATED BY THE PLAN IS COMPLETED, UNLESS SOONER RELINQUISHED IN WRITING BY THE DEPARTMENT.

DRAINAGE EASEMENT. AN EASEMENT FOR THE CONSTRUCTION, INSPECTION, MAINTENANCE, REPAIR, RECONSTRUCTION AND ALTERATION OF HIGHWAY DRAINAGE FACILITIES. THE EASEMENT SHALL NOT PREVENT THE PROPERTY OWNER FROM MAKING ANY LEGAL USE OF THE AREA WHICH IS NOT DETRIMENTAL TO THE NECESSARY FLOW OF WATER. HOWEVER, NO STRUCTURE OF ANY KIND MAY BE ERECTED IN THE AREA, NOR MAY ANY PIPE OR DITCH BE CONNECTED TO THE DEPARTMENT'S PIPE OR DITCH WITHOUT ADVANCE WRITTEN APPROVAL BY THE DEPARTMENT OF TRANSPORTATION.

SLOPE EASEMENT. AN EASEMENT FOR THE SUPPORT AND PROTECTION OF THE HIGHWAY, INCLUDING THE RIGHT TO CONSTRUCT, INSPECT, MAINTAIN, REPAIR, RECONSTRUCT AND ALTER DRAINAGE FACILITIES, AND THE CONTOUR OF THE LAND. THE EASEMENT SHALL NOT PREVENT THE PROPERTY OWNER FROM MAKING ANY LEGAL USE OF THE AREA WHICH IS NOT DETRIMENTAL TO THE NECESSARY SUPPORT AND PROTECTION OF THE HIGHWAY RIGHT-OF-WAY AND THE SAFETY OF THE TRAVELING PUBLIC.

CHANNEL EASEMENT. AN EASEMENT FOR THE CONSTRUCTION, INSPECTION, MAINTENANCE, REPAIR, RECONSTRUCTION AND ALTERATION OF THE COURSE OF THE CHANNEL. THE EASEMENT SHALL NOT PREVENT THE PROPERTY OWNER FROM MAKING ANY LEGAL USE OF THE AREA WHICH IS NOT DETRIMENTAL TO THE NECESSARY FLOW OF WATER.

GENERAL NOTES (CONTINUED)

CONSTRUCT PROJECT IN ACCORDANCE WITH PUBLICATION 408 SPECIFICATIONS, DATED 2020 EXCEPT AS MODIFIED BY THE CONSTRUCTION PLANS AND PROJECT SPECIFICATIONS.

DO NOT INTERFERE WITH THE OPERATION OF ANY FIRE HYDRANT, FIRE CALL BOX OR POLICE CALL BOX.

THIS IS A FEDERAL-AID PROJECT AND AS SUCH IS SUBJECT TO INSPECTION BY REPRESENTATIVES OF THE FEDERAL HIGHWAY ADMINISTRATION AND THE PENNSYLVANIA DEPARTMENT OF TRANSPORTATION.

THREE TO TEN WORKING DAYS PRIOR TO EXCAVATION BASED ON THE COMPLEXITY OF THE PROJECT, THE CONTRACTOR MUST CONTACT THE PA ONE CALL SYSTEM, INC., PHONE 1-800-242-1776,
SERIAL NO.---------- FOR ROSTRAVER TOWNSHIP.
SERIAL NO.---------- FOR SOUTH HUNTINGDON TOWNSHIP.
ADDITIONAL INFORMATION IS AVAILABLE AT https://www.paicall.org/PA811/Public/.

THE CONTRACTOR IS REQUIRED TO NOTIFY THE DEPARTMENT AND SUBMIT AN ALLEGED VIOLATION REPORT (AVR) TO THE PA PUBLIC UTILITY COMMISSION THROUGH THE PA ONE CALL SYSTEM, WWW.PA1CALL.ORG, WITHIN TEN (10) BUSINESS DAYS AFTER A UTILITY LINE IS STRUCK, DAMAGED, OR PREVIOUS DAMAGE IS DISCOVERED AS REQUIRED BY PENNSYLVANIA'S UNDERGROUND UTILITY LINE PROTECTION LAW ACT 50 (P.L.852, NO. 287 AMENDED OCT. 30, 2017).

BUILDINGS AND STRUCTURES MARKED [O] ARE ENCROACHMENTS WHICH ARE THE RESPONSIBILITY OF THE PROPERTY OWNER TO REMOVE. IN CASE ANY ENCROACHMENTS SO MARKED ARE NOT REMOVED BY THE PROPERTY OWNER, DO NOT INTERFERE WITH OR REMOVE SAME UNTIL AUTHORIZED IN WRITING BY THE ENGINEER.

DEMOLISH AND REMOVE BUILDINGS AND STRUCTURES MARKED [D] AS LUMP SUM ITEMS AT THE LOCATIONS INDICATED.

VERTICAL DATUM FOR THESE PLANS IS BASED ON NATIONAL GEODETIC SURVEY BENCHMARKS (NAVD 88).

THE HORIZONTAL CONTROL IS TIED TO THE PENNSYLVANIA STATE PLANE COORDINATE SYSTEM, SOUTH ZONE, 92 ADJUSTMENT (1983 NAD). THE COMBINED SCALE FACTOR FOR THIS PROJECT IS 0.999925.

TOPOGRAPHY AND CROSS SECTIONS ON THIS PLAN WERE OBTAINED BY AERIAL PHOTOGRAMMETRY.

ALL CURVE DATA IS BASED ON ARC DEFINITION UNLESS OTHERWISE NOTED.

ACCESS TO ALL COMMERCIAL AND RESIDENTIAL DRIVEWAYS SHALL BE MAINTAINED AT ALL TIMES.

THE CONTRACTOR MUST MAINTAIN THE 15.0' HORIZONTAL CLEAR ZONE FROM CENTERLINE OF THE EXISTING CSX AND W&LE RAILROAD TRACKS AT ALL TIMES.

THE YOUGHIOGHENY RIVER IS CLASSIFIED AS 'NAVIGABLE' WITHIN THE PROJECT AREA.

+45 / 75' THE HALF CIRCLE NUMBER INDICATES A SCALED DIMENSION.

+45.00 / 75.00' INDICATES MONUMENTED DIMENSIONS.

F----C---- CUT FILL INDICATES SLOPE LIMITS

CERTIFIED CORRECT PLANS
Professional Engineer
Approved by Bureau of Technical Utility Services
PA PUBLIC UTILITY COMMISSION
ATTEST
Secretary

DETAILS, OTHER THAN THOSE INDICATED, ARE ON THE FOLLOWING STANDARD DRAWINGS:

NO.	DATE:
RC-10M	JUN. 1, 2010
RC-11M	JUN. 1, 2010
RC-12M	FEB. 8, 2019
RC-13M	JUN. 1, 2010
RC-20M	NOV. 30, 2021
RC-22M	FEB. 8, 2019
RC-23M	FEB. 8, 2019
RC-24M	FEB. 19, 2021
RC-25M	NOV. 30, 2021
RC-27M	NOV. 30, 2021
RC-28M	FEB. 8, 2019
RC-30M	NOV. 30, 2021
RC-31M	NOV. 30, 2021
RC-32M	JUN. 1, 2010
RC-33M	JUN. 1, 2010
RC-35M	JUN. 1, 2010
RC-39M	NOV. 30, 2021
RC-40M	FEB. 8, 2019
RC-43M	FEB. 8, 2019
RC-45M	FEB. 19, 2021
RC-46M	FEB. 19, 2021

NO.	DATE:
RC-50M	FEB. 19, 2021
RC-51M	NOV. 30, 2021
RC-53M	NOV. 30, 2021
RC-54M	NOV. 30, 2021
RC-55M	NOV. 30, 2021
RC-56M	NOV. 30, 2021
RC-57M	NOV. 30, 2021
RC-58M	AUG. 4, 2017
RC-60M	JUN. 1, 2010
RC-61M	JUN. 1, 2010
RC-63M	JUN. 1, 2010
RC-64M	FEB. 19, 2021
RC-65M	DEC. 17, 2019
RC-67M	FEB. 19, 2021
RC-70M	FEB. 8, 2019
RC-71M	AUG. 4, 2017
RC-72M	FEB. 8, 2019
RC-73M	FEB. 8, 2019
RC-74M	FEB. 8, 2019
RC-75M	JUN. 1, 2010
RC-77M	DEC. 17, 2019
RC-80M	JUN. 1, 2010
RC-81M	JUN. 1, 2010
RC-82M	JUN. 1, 2010
RC-83M	FEB. 8, 2019
RC-84M	JUN. 1, 2010
RC-91M	DEC. 17, 2019
RC-92M	JUN. 1, 2010

NO.	DATE:
TC-8600	JUN. 13, 2013
TC-8602	JUN. 13, 2013
TC-8604	AUG. 17, 2021
TC-8700C	JUN. 13, 2013
TC-8701A	JUN. 13, 2013
TC-8701D	JUN. 13, 2013
TC-8701E	JUN. 13, 2013
TC-8701S	JUN. 13, 2013
TC-8702A	JUN. 13, 2013
TC-8702B	JUN. 13, 2013
TC-8702C	JUN. 13, 2013
TC-8702E	JUN. 13, 2013
TC-8710	JUN. 13, 2013
TC-8716	JUN. 13, 2013
TC-8717	JUN. 13, 2013
TC-8801	DEC. 12, 2011
TC-8802	DEC. 12, 2011
TC-8803	DEC. 12, 2011
TC-8804	DEC. 12, 2011
TC-8805	DEC. 12, 2011
TC-8806	DEC. 12, 2011
ITS-1201	MAR. 1, 2013
ITS-1210	MAR. 1, 2013
ITS-1230	MAR. 1, 2013
ITS-1231	MAR. 1, 2013

NO.	DATE:
BD-649M	AUG. 4, 2017
BC-701M	FEB. 19, 2021
BC-721M	FEB. 19, 2021
BC-732M	JAN. 31, 2019
BC-734M	FEB. 19, 2021
BC-735M	SEPT. 30, 2016
BC-736M	JAN. 31, 2019
BC-741M	AUG. 4, 2017
BC-747M	AUG. 4, 2017
BC-751M	JAN. 31, 2019
BC-752M	FEB. 19, 2021
BC-753M	JAN. 31, 2019
BC-755M	JAN. 31, 2019
BC-757M	SEPT. 30, 2016
BC-762M	JAN. 31, 2019
BC-766M	JAN. 31, 2019
BC-767M	FEB. 19, 2021
BC-770M	JAN. 31, 2019
BC-772M	SEPT. 30, 2016
BC-775M	SEPT. 30, 2016
BC-783M	JAN. 31, 2019
BC-788M	JAN. 31, 2019
BC-798M	JAN. 31, 2019

COMMONWEALTH OF PENNSYLVANIA
REGISTERED PROFESSIONAL
BRENAN ELIZABETH MCBRIDE
ENGINEER
No. PE062933

FILE: pw:\\dfnet-pw.bentley.com:gfnet-pw-01\Documents\Projects\61636\OUTPUT\COMP_01\CIVIL\ROAD\SR70-E10 Locmap.dgn
DATE: 2/7/2022 TIME: 9:13:53 AM

NOTE: THE INSIDE EDGES OF THE NORTHBOUND AND SOUTHBOUND INNERMOST LANES ARE BASED ON A 2.0% DOWNGRADE FROM THE GRADE POINT ELEVATION AT THE CENTERLINE OF THE ROADWAY.

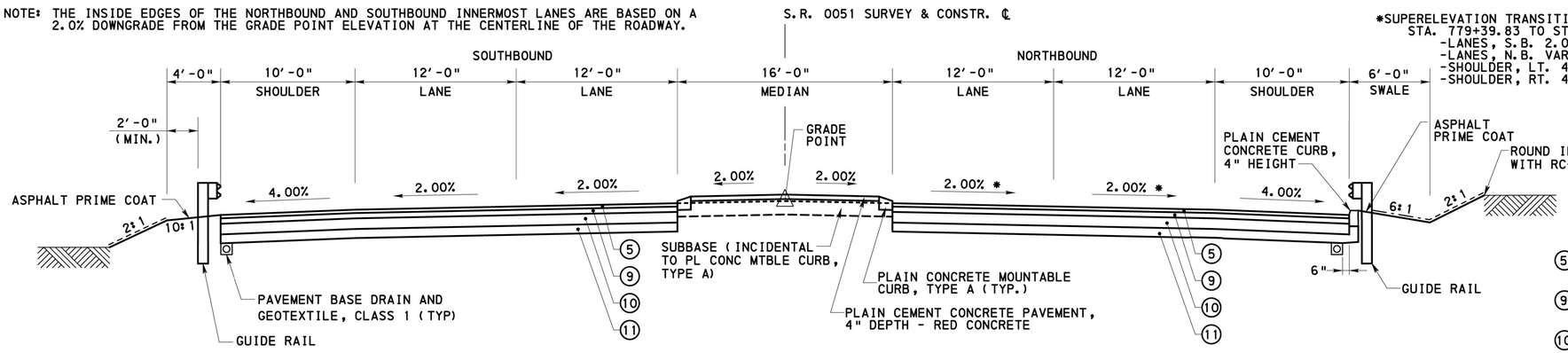

S.R. 0051
TYPICAL TANGENT SECTION

NOT TO SCALE
S.R. 0051 STA. 779+39.83 TO STA. 782+59.31, RT.
S.R. 0051 STA. 779+39.83 TO STA. 782+91.22, LT.

*SUPERELEVATION TRANSITION CROSS SLOPES:
STA. 779+39.83 TO STA. 780+29.83
-LANES, S.B. 2.00% (NC)
-LANES, N.B. VARY LEVEL TO 2.00% (NC)
-SHOULDER, LT. 4.00%
-SHOULDER, RT. 4.00%

DISTRICT	COUNTY	ROUTE	SECTION	SHEET
12-0	WESTMORELAND	0070	E10	42 OF 436
	ROSTRAVER TOWNSHIP			

REVISION NUMBER	REVISIONS	DATE	BY

S.R. 0051

LEGEND

NOTE: TEMPORARY WEARING COURSE TO BE INSTALLED DURING TRAFFIC CONTROL PHASES 3 AND 4. SEE TRAFFIC CONTROL PLAN FOR INTERIM WEARING COURSE PAVEMENT DESIGN. FINAL STONE MATRIX WEARING COURSE TO BE INSTALLED DURING PHASE 5.

(5) STONE MATRIX ASPHALT MIXTURE DESIGN, WEARING COURSE, RPS, PG 64E-22, LTS ACCEPTANCE 9.5 MM MIX, 1 1/2" DEPTH, SRL-E

(9) SUPERPAVE ASPHALT MIXTURE DESIGN, BINDER COURSE, RPS, PG 64E-22, 3.0 TO < 10.0 MILLION ESALS, 19.0 MM MIX, 2 1/2" DEPTH

(10) SUPERPAVE ASPHALT MIXTURE DESIGN, BASE COURSE, PG 64S-22, < 0.3 MILLION ESALS, 25.0 MM MIX, 9 1/2" DEPTH

(11) SUBBASE 8" DEPTH (NO. 2A)

PLACE ASPHALT TACK COAT (NTT/CNTT) BETWEEN EACH ASPHALT LAYER/LIFT PER PUBLICATION 408, SECTION 460

------- SEEDING AND SOIL SUPPLEMENTS - FORMULA L, INCLUDING MULCH (FOR SLOPES 3:1 OR STEEPER)

—·—·— SEEDING AND SOIL SUPPLEMENTS - FORMULA D, INCLUDING MULCH (FOR SLOPES FLATTER THAN 3:1, BASIN SIDE SLOPES, DITCHES, AND GRASS LINED SWALES)

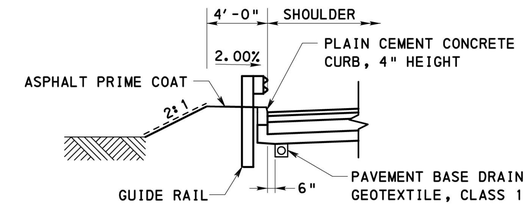

S.R. 0051
DETAIL - 4" CONCRETE CURB WITH GUIDE RAIL, LT.

NOT TO SCALE
S.R. 0051 STA. 781+50.00 TO STA. 782+20.00, LT.
S.R. 0051 STA. 779+32.68 TO STA. 781+80.00, RT. (OPPOSITE)

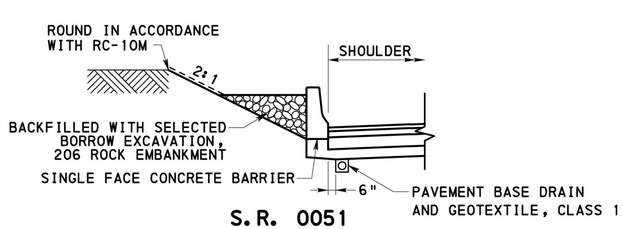

S.R. 0051
DETAIL - SINGLE FACE CONCRETE BARRIER, LT.

NOT TO SCALE
S.R. 0051 STA. 781+80.00 TO STA. 782+59.31, RT. (OPPOSITE)
S.R. 0051 STA. 782+20.00 TO STA. 782+91.22, LT.
S.R. 0051 STA. 782+91.91 TO STA. 783+15.00, RT. (OPPOSITE)
S.R. 0051 STA. 783+23.82 TO STA. 783+60.00, LT.

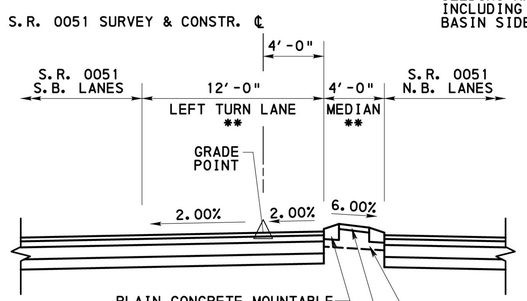

S.R. 0051
DETAIL - LEFT TURN LANE

NOT TO SCALE
S.R. 0051 STA. 779+70.00 TO STA. 781+45.00

**WIDTH VARIES
S.R. 0051 STA. 779+70.00 TO STA. 780+45.00
-MEDIAN ISLAND 4'-0", RT.
-LANE 12'-0", LT.

S.R. 0051 STA. 780+45.00 TO STA. 781+45.00
-MEDIAN ISLAND VARIES 4'-0" TO 16'-0"
-LANE VARIES 12'-0" TO 0'-0"

CERTIFIED CORRECT PLANS
Professional Engineer
Approved by Bureau of Technical Utility Services
PA PUBLIC UTILITY COMMISSION
ATTEST Secretary

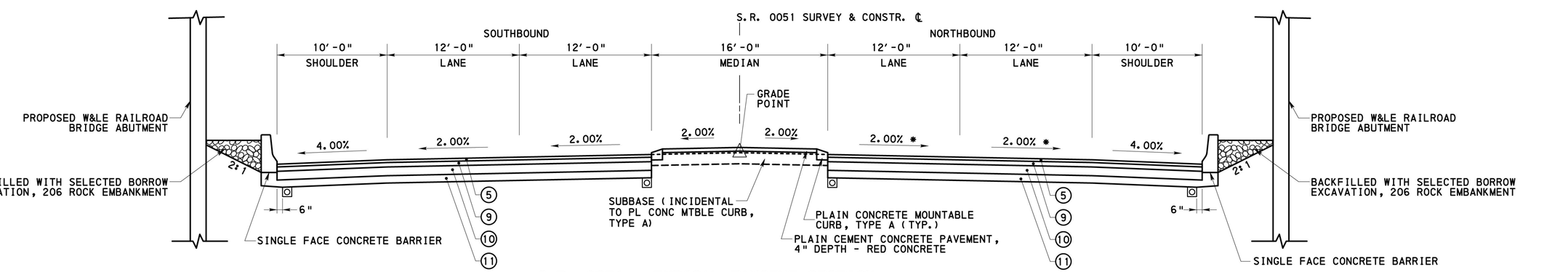

S.R. 0051 - TYPICAL TANGENT SECTION

NOT TO SCALE
S.R. 0051 STA. 782+59.31 TO STA. 782+91.91, RT.
S.R. 0051 STA. 782+91.22 TO STA. 783+23.82, LT.

TYPICAL SECTIONS

COMMONWEALTH OF PENNSYLVANIA
REGISTERED PROFESSIONAL
BREHAN ELIZABETH MCBRIDE
ENGINEER
No. PE082931

FILE: pw:\\dfnet-pw.bentley.com:dfnet-pw-01\Documents\Projects\61636\OUTPUT\COMP_01\C1V1L\ROAD\SR70-E10 Typicals.dgn
DATE: 2/3/2022 TIME: 9:24:52 AM

DISTRICT	COUNTY	ROUTE	SECTION	SHEET
12-0	WESTMORELAND	0070	E10	60 OF 436
	ROSTRAVER TOWNSHIP			

REVISION NUMBER	REVISIONS	DATE	BY

RAILROAD

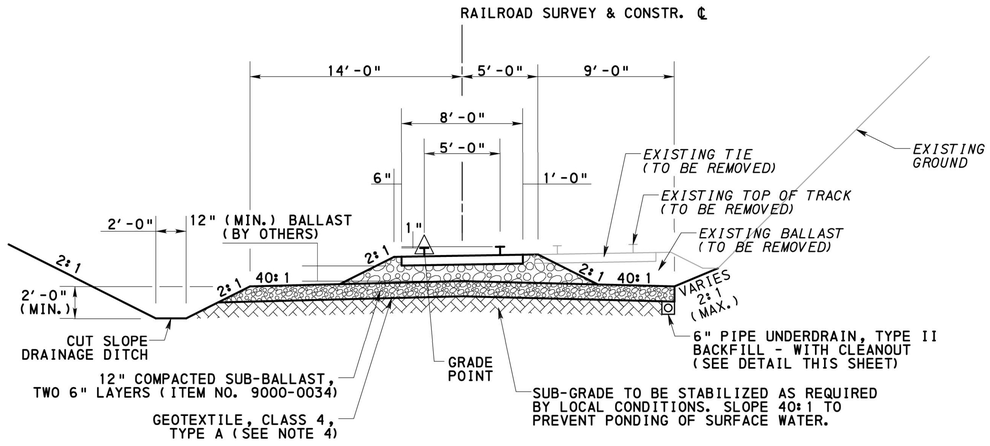

RAILROAD
TYPICAL SUPERELEVATED SECTION

NOT TO SCALE
RAILROAD STA. 5018+60.00 TO STA. 5021+30.00

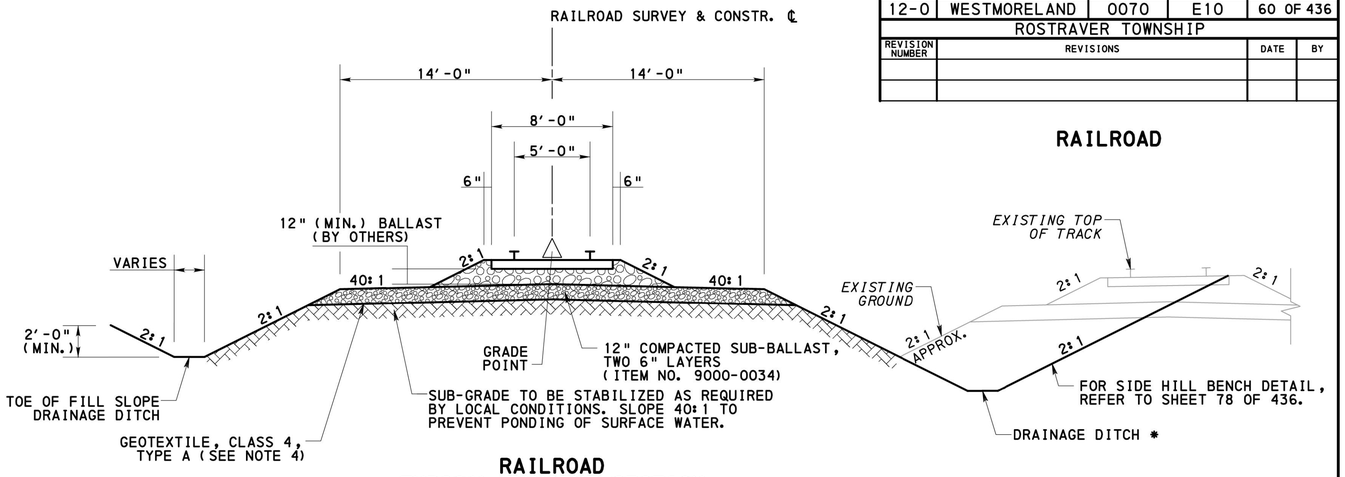

RAILROAD
TYPICAL TANGENT SECTION

NOT TO SCALE
RAILROAD STA. 5029+05.45 TO STA. 5031+58.52
RAILROAD STA. 5032+69.61 TO STA. 5034+73.57

* DRAINAGE DITCH FLOW DIRECTION:
- WEST OF S.R. 51
  - DRAIN TO CEDAR CREEK
- EAST OF S.R. 51
  - DRAIN TO EXISTING DRAINAGE DITCH TO THE EAST

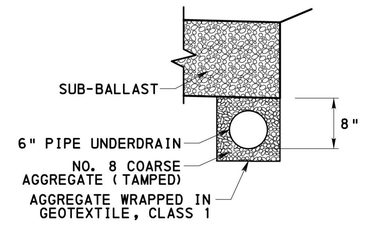

DETAIL - RAILROAD DITCH UNDERDRAIN (ITEM 4610-1001)

NOT TO SCALE
RAILROAD STA. 5018+60.00 TO STA. 5022+00.00, RT.

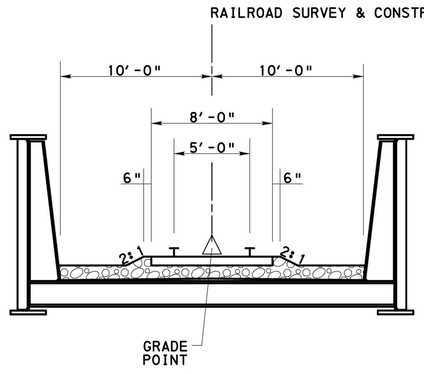

RAILROAD
TYPICAL BRIDGE SECTION

NOT TO SCALE
RAILROAD STA. 5031+58.52 TO STA. 5032+69.61

NOTES:
1. SUB-GRADE MAY BE STABILIZED WITH LIME, LIME-FLY ASH, CEMENT, OR STONE.
2. TAMPING OF BALLAST MUST NOT DISTURB COMPACTED SUB-BALLAST.
3. TOP OF SUB-GRADE IS TO BE CROWNED.
4. GEOTEXTILE TO BE MINIMUM 16 OZ/SY, NON-WOVEN FABRIC.

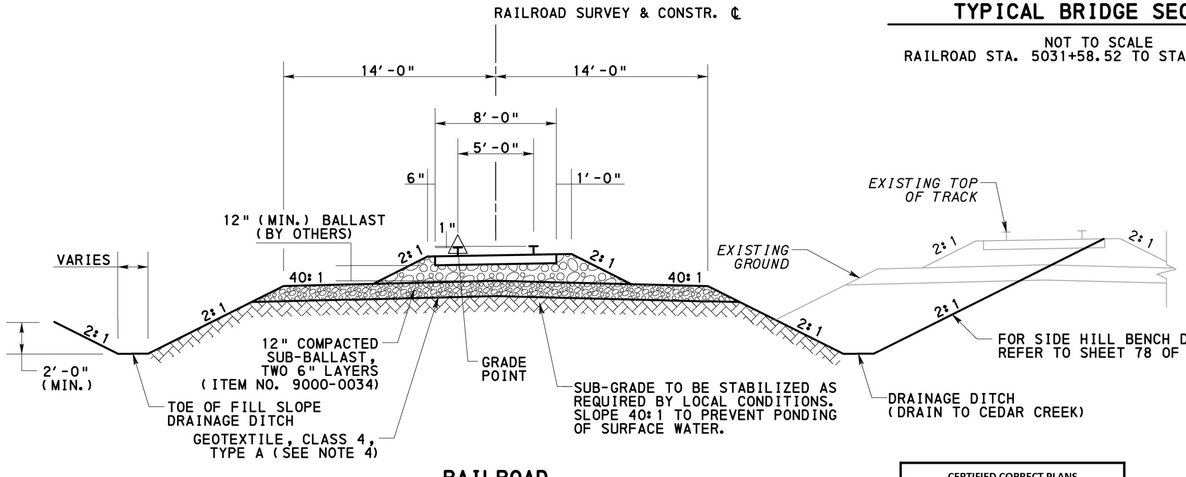

RAILROAD
TYPICAL SUPERELEVATED SECTION

NOT TO SCALE
RAILROAD STA. 5021+30.00 TO STA. 5029+05.45

CERTIFIED CORRECT PLANS
Daniel R. Pallock
Professional Engineer
Approved by Bureau of Technical Utility Services
PA PUBLIC UTILITY COMMISSION
ATTEST
Secretary

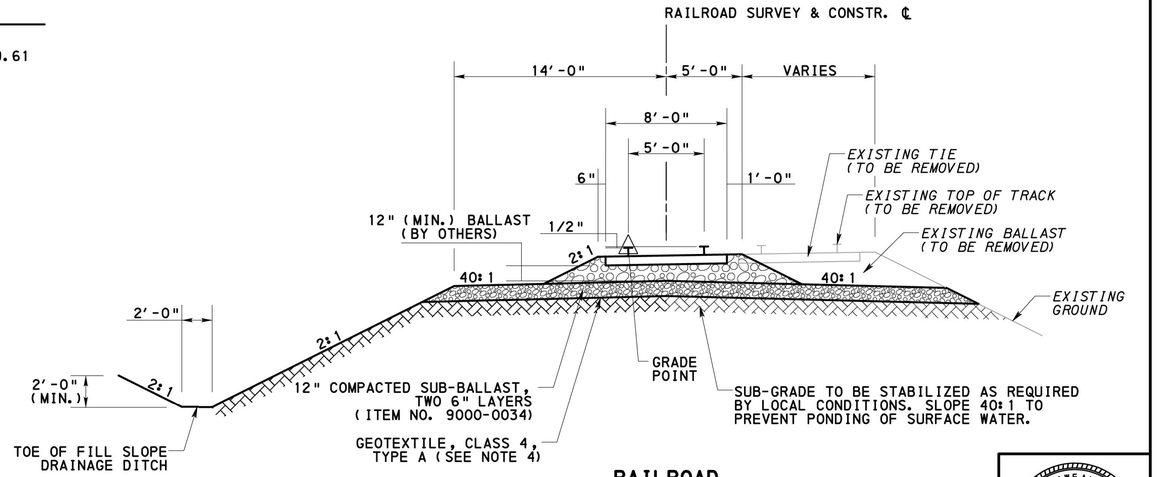

RAILROAD
TYPICAL SUPERELEVATED SECTION

NOT TO SCALE
RAILROAD STA. 5034+73.57 TO STA. 5037+90.00

TYPICAL SECTIONS

COMMONWEALTH OF PENNSYLVANIA
REGISTERED PROFESSIONAL ENGINEER
BREHAN ELIZABETH MCBRIDE
No. PE062933

FILE: pw:\\pfnet-pw.penndot.gov\pfnet-pw-01\Documents\Projects\61636\OUTPUT\COMP_01\CIVIL\ROAD\SR70-E10 Typicals.dgn
DATE: 6/7/2022 TIME: 9:26:13 AM

DISTRICT	COUNTY	ROUTE	SECTION	SHEET
12-0	WESTMORELAND	0070	E10	78 OF 436
ROSTRAVER AND SOUTH HUNTINGDON TOWNSHIPS				

REVISION NUMBER	REVISIONS	DATE	BY

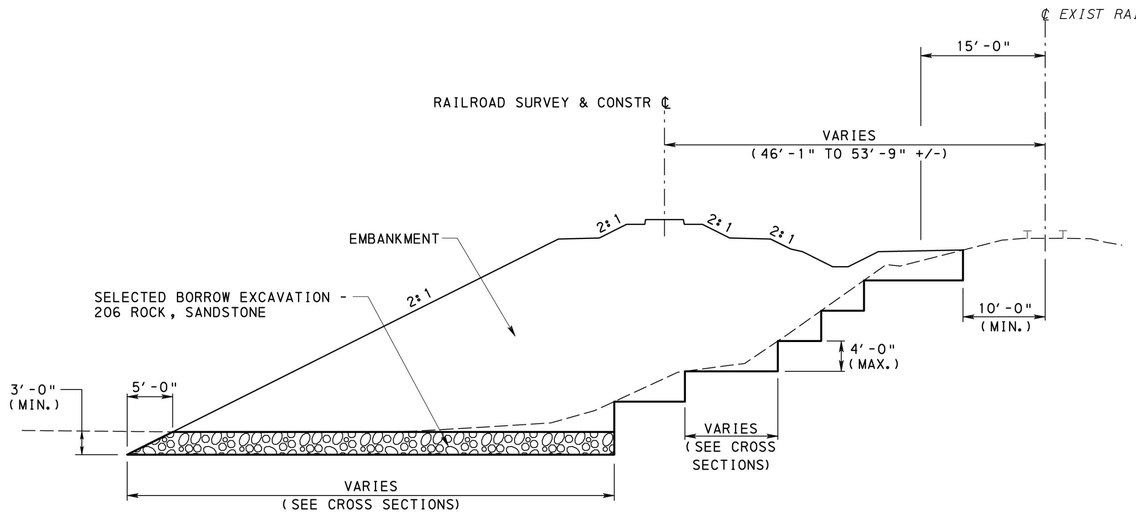

DETAIL - TYPE 2 WIDENED EMBANKMENT AT W&LE RAILROAD

NOT TO SCALE

RAILROAD - STA. 5026+75 TO STA. 5030+00

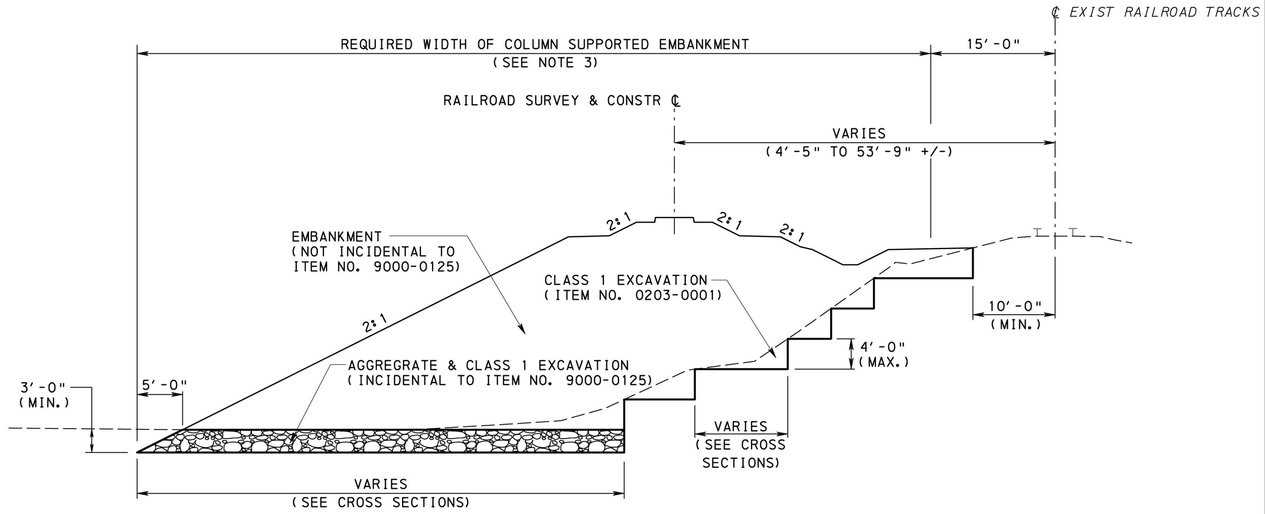

DETAIL
COLUMN SUPPORTED EMBANKMENT (W&LE)
AND SIDE HILL BENCH (W&LE)

NOT TO SCALE

(ITEM NO. 9000-0125)

STA. 5030+00 TO STA. 5031+80

STA. 5032+75 TO STA. 5036+00

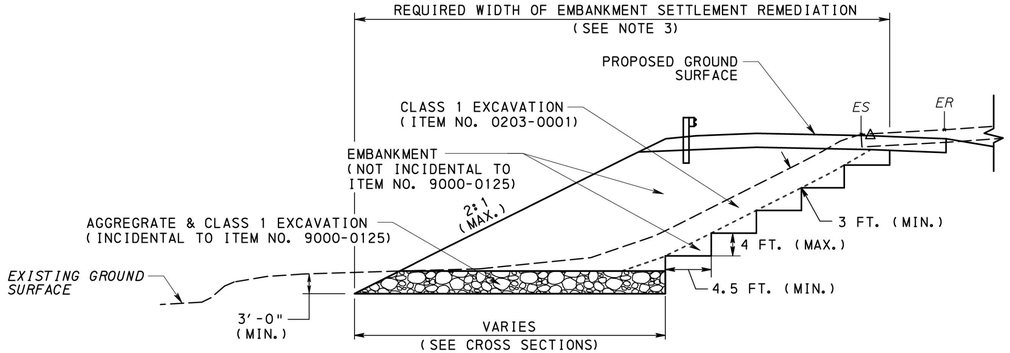

DETAIL
SIDE HILL BENCH
EMBANKMENT SETTLEMENT REMEDIATION

FOR FULL HEIGHT EMBANKMENTS
NOT TO SCALE

BASELINE	STATION LIMITS	OFFSET	OFFSET
SR 8024 - RAMP A	115+50 TO 117+50	LT/RT	2:1
SR 8024 - RAMP B	200+00 TO 202+50	RIGHT	3:1
SR 8024 - RAMP B	208+50 TO 209+00	LEFT	2:1
SR 8024 - RAMP B	210+50 TO 211+50	RIGHT	2:1
SR 8024 - RAMP B	212+50 TO 213+00	RIGHT	2:1
SR 8024 - RAMP B SPUR	20+00 TO 21+50	LEFT	2:1
SR 8024 - RAMP D	402+00 TO 402+50	LEFT	3:1
SR 8024 - RAMP D	407+50 TO 408+00	LEFT	2:1
SR 0051	796+00 TO 798+00	RIGHT	3:1
SR 0051	800+50 TO 802+50	RIGHT	2:1
SR 0051	804+50 TO 806+50	RIGHT	2:1
SR 0051	805+50 TO 807+00	LEFT	2:1
SR 0051	808+00 TO 808+50	RIGHT	2:1

NOTES:

1. GENERAL WHEELING AND LAKE ERIE EMBANKMENT CONSTRUCTION SEQUENCE:
   a. CONSTRUCT COLUMN SUPPORTED EMBANKMENT AND LOAD TRANSFER PLATFORM IN ACCORDANCE WITH ITEM NO. 9000-0125 WHERE INDICATED.
   b. CONSTRUCT EMBANKMENT TOE KEY OUTSIDE OF THE COLUMN SUPPORTED EMBANKMENT AREAS.
   c. CONSTRUCT BONDING BENCHES AND NEW EMBANKMENT IN SEQUENCED APPROACH FROM THE BOTTOM UP SUCH THAT NO MORE THAN 4 FEET OF EXISTING BENCHED EMBANKMENT IS EXPOSED AT ANY TIME PRIOR TO PLACING NEW EMBANKMENT.
2. SHORING WILL BE REQUIRED TO SUPPORT THE EXISTING RAIL BENCHING AND NEW EMBANKMENT BETWEEN STATIONS 5034+00 AND 5036+00.
3. INSTALL COLUMN SUPPORTED EMBANKMENT (CSE) ELEMENTS WITHIN THE AREA INDICATED IN ACCORDANCE WITH ITEM NO. 9000-0125.
4. ALL SUBGRADE WILL NEED TO BE INSPECTED PER PUB 408, SECTION 206, PRIOR TO THE PLACEMENT OF ANY FILL MATERIAL.
5. NOTIFY DISTRICT GEOTECHNICAL ENGINEER 48 HOURS PRIOR TO REQUIRED INSPECTION OF SUBGRADE

CERTIFIED CORRECT PLANS
Professional Engineer
Approved by Bureau of Technical Utility Services
PA PUBLIC UTILITY COMMISSION
ATTEST
Secretary

GEOTECHNICAL DETAILS

COMMONWEALTH OF PENNSYLVANIA
REGISTERED PROFESSIONAL
BREHAN ELIZABETH MCBRIDE
ENGINEER
No. PE062933

FILE: pw:\\pfnet-pw.bentley.com:pfnet-pw-01\Documents\Projects\61636\OUTPUT\COMP_01\CIVIL\ROAD\SR70-E10 Det11.dgn
DATE: 6/7/2022 TIME: 9:28:14 AM

DISTRICT	COUNTY	ROUTE	SECTION	SHEET
12-0	WESTMORELAND	0070	E10	123 OF 436
	ROSTRAVER TOWNSHIP			

REVISION NUMBER	REVISIONS	DATE	BY

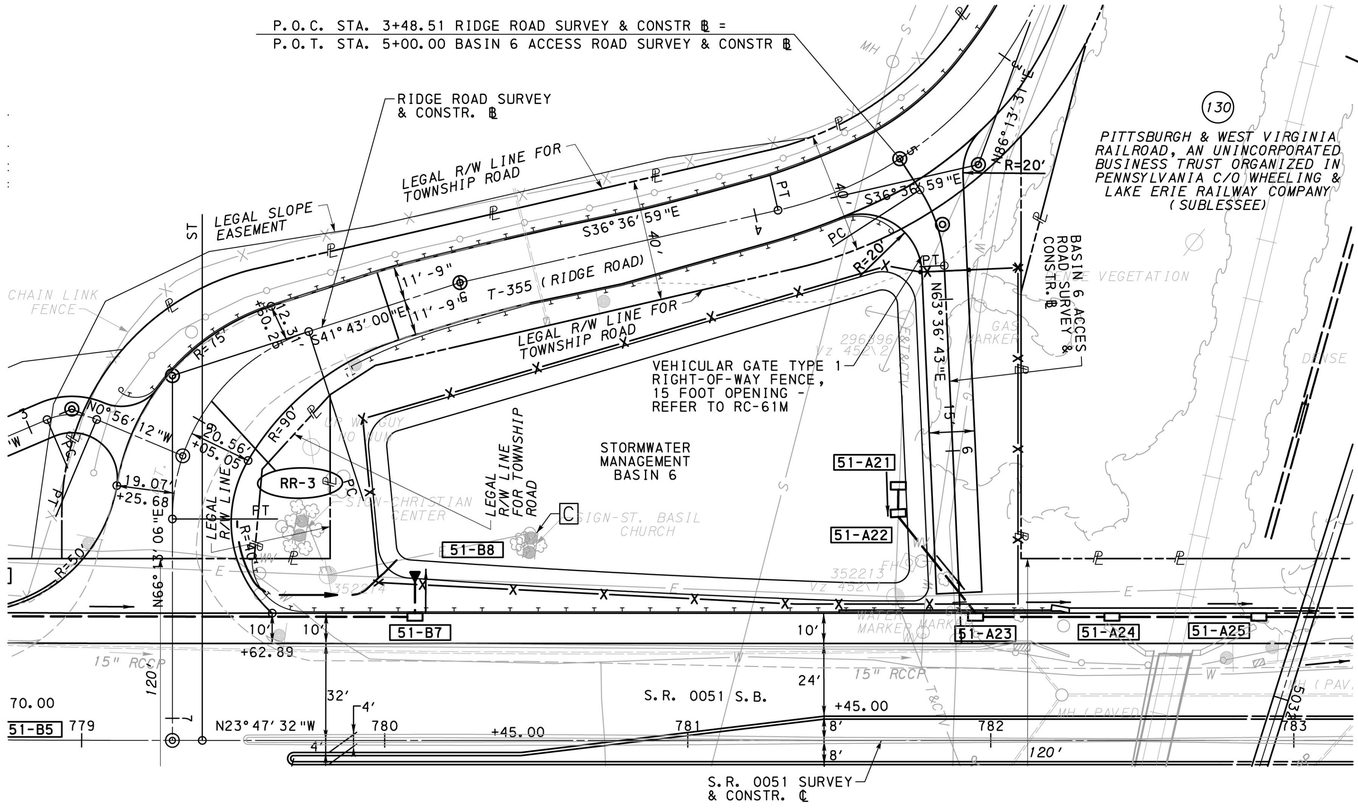

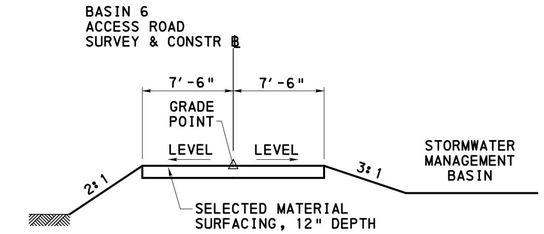

TYPICAL SECTION - BASIN 6 ACCESS ROAD

NOT TO SCALE
STA. 5+41.00 TO STA. 6+47.00

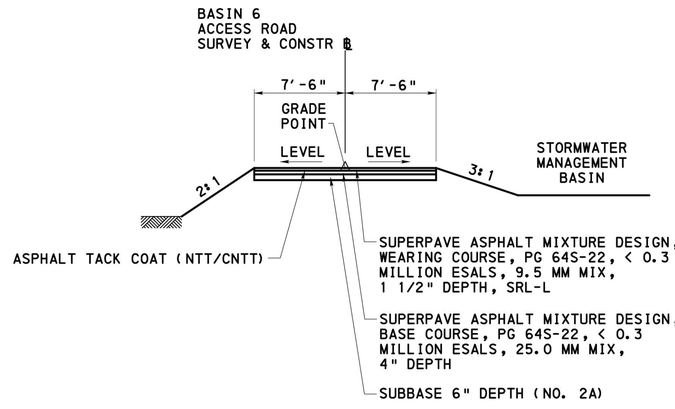

TYPICAL SECTION - BASIN 6 ACCESS ROAD

NOT TO SCALE
STA. 5+09.17 TO STA. 5+41.00

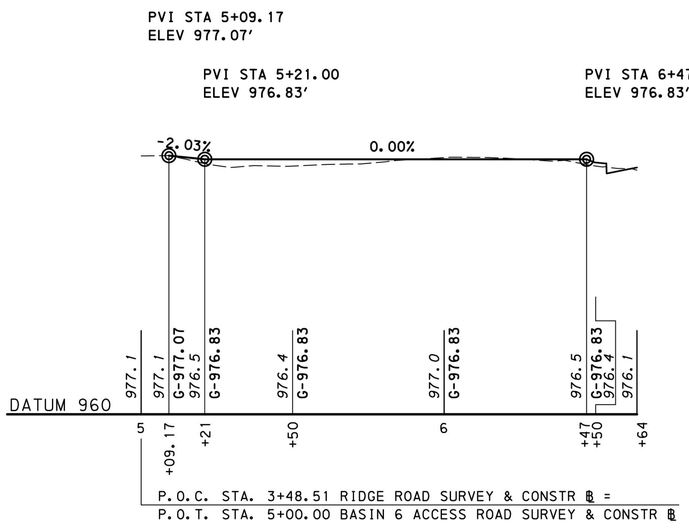

PROFILE

ROUTE	STATION	POINT	COORDINATES		BEARING
			NORTH	EAST	
BASIN 6 ACCESS ROAD SURVEY & CONSTR. ℄	5+00.00	POB	303749.2517	1402927.4195	N 33° 11' 49" E
	5+12.26	PC	303759.5096	1402934.1313	
	5+25.85	PI	303770.8831	1402941.5731	
	5+38.80	PT	303776.9240	1402953.7487	N 63° 36' 43" E
	6+63.61	POE	303832.3971	1403065.5572	

HORIZONTAL
0 25 50 FEET

VERTICAL
0 5 10 FEET

CERTIFIED CORRECT PLANS
David A. Hollerich
Professional Engineer
Approved by Bureau of Technical Utility Services
PA PUBLIC UTILITY COMMISSION
ATTEST Secretary

EXTENDED DETENTION BASIN 6 ACCESS DRIVE

COMMONWEALTH OF PENNSYLVANIA
REGISTERED PROFESSIONAL
BRENAN ELIZABETH MCBRIDE
ENGINEER
No. PE062933

FILE: pw:\\dfnet-pw.penndot.gov\dfnet-pw-01\Documents\Projects\61636\OUTPUT\COMP_01\C1V1L\ROAD\SR70-E10 De09.dgn
DATE: 2/7/2022 TIME: 8:35:23 AM

DISTRICT	COUNTY	ROUTE	SECTION	SHEET
12-0	WESTMORELAND	0070	E10	124 OF 436
	ROSTRAVER TOWNSHIP			

REVISION NUMBER	REVISIONS	DATE	BY

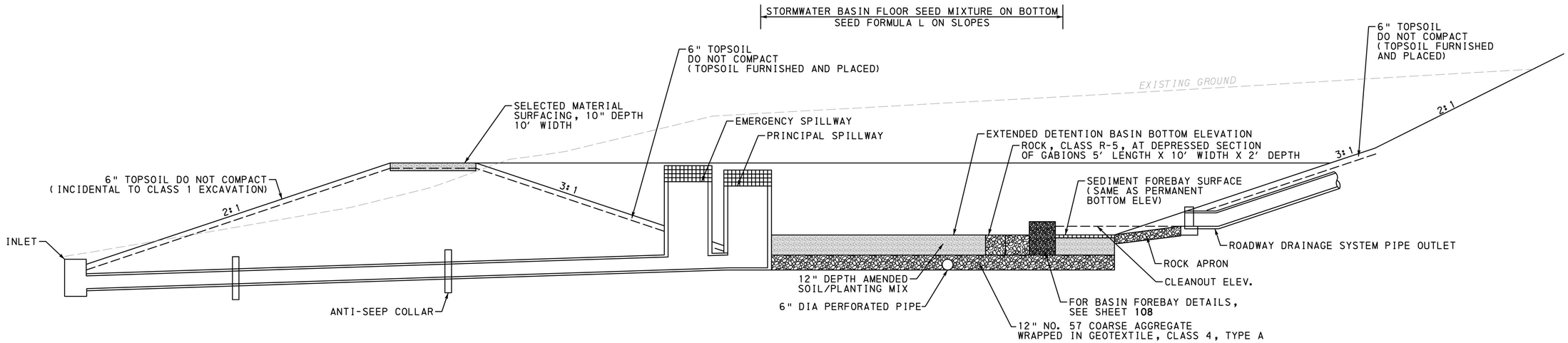

NOTES
1. FOR TYPICAL RISER CONSTRUCTION DETAILS, SEE SHEET **109**
2. STORMWATER MANAGEMENT BASIN EMBANKMENT AND KEY TRENCH BACKFILL MATERIAL MUST BE APPROVED BY THE ENGINEER. EMBANKMENT MATERIAL SHALL CONSIST OF UNIFIED SOIL CLASSIFICATION TYPES GC, GM, SC, SM, CL, OR ML AS DETERMINED PER ASTM D-2487.

EXTENDED DETENTION BASIN TYPICAL SECTION

NOT TO SCALE

EXTENDED DETENTION BASIN 6 DATA TABLE																
BOTTOM ELEV	SUBSURFACE STORAGE BOTTOM ELEV	TOP BERM ELEV	ORIFICE DATA			PRINCIPAL SPILLWAY			OUTLET PIPE					EMERGENCY SPILLWAY		
			OPENINGS	INV ELEV	AREA (SF)	BOX SIZE	INLET NUMBER	CREST ELEV	INV ELEV	DIA (IN)	LENGTH (FT)	UNDERDRAIN ELEV	CLEANOUT ELEV	CREST ELEV	BOX SIZE	INLET NUMBER
974.00	971.00	976.00	1	974.00	0.50	STANDARD	(51-A21)	974.70	970.50	24.00	41.39	971.00	975.00	975.00	STANDARD	(51-A22)

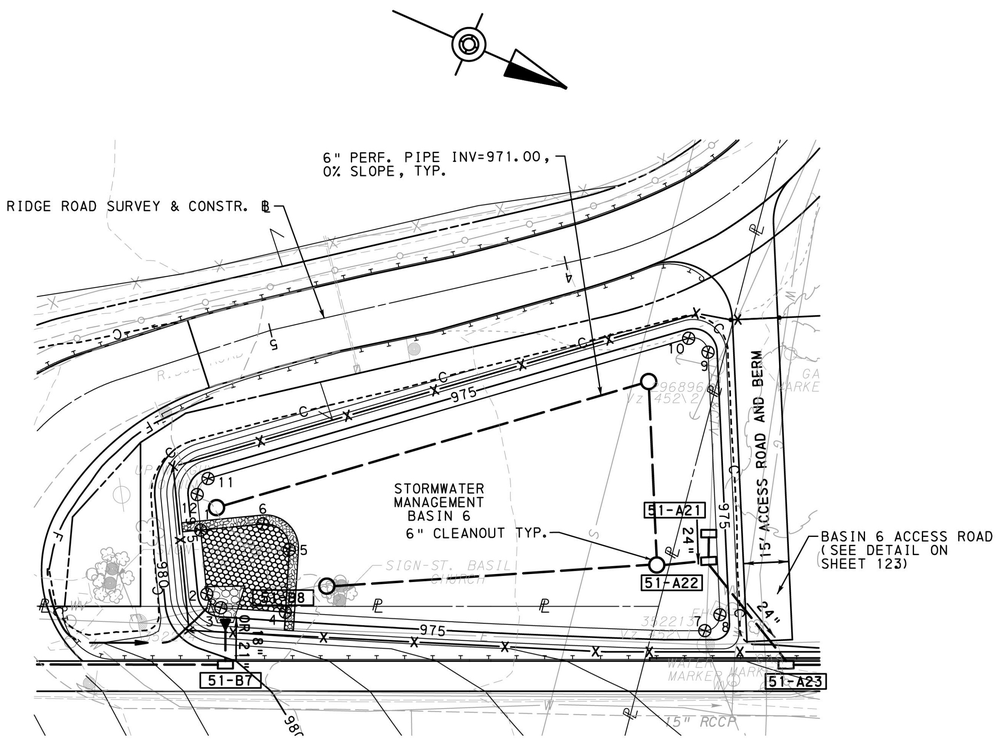

POINT	COORDINATES	
	NORTH	EAST
1	303638.4641	1403092.9604
2	303648.8525	1403111.4537
3	303654.9078	1403113.7085
4	303674.9689	1403106.4311
5	303667.8608	1403087.0780
6	303656.4352	1403082.8654
7	303804.0565	1403056.1946
8	303806.5184	1403049.3973
9	303767.9702	1402971.7016
10	303760.2734	1402970.0969
11	303633.8333	1403076.4087
12	303632.6918	1403082.6844

ITEMS AND QUANTITIES STORMWATER MANAGEMENT EXTENDED DETENTION BASIN 6 ITEM 9000-0205 (FOR INFORMATION ONLY)		
DESCRIPTION	UNIT	QTY
CLASS 1 EXCAVATION	CY	7,091
EMBANKMENT	CY	0
GEOTEXTILE, CLASS 4, TYPE A	SY	2,738
24" CONCRETE PIPE	LF	13
TYPE M CONCRETE TOP UNIT AND GRATE	EACH	2
TYPE 5 INLET BOX; HEIGHT </= 10'	EACH	1
CORROSION RESISTANT GABIONS, TYPE B	CY	25
SELECTED MATERIAL SURFACING	CY	73
NO. 8 COARSE AGGREGATE	CY	5
NO. 57 COARSE AGGREGATE	CY	888
NO. 3 COARSE AGGREGATE	CY	21
TOPSOIL FURNISHED AND PLACED	CY	89
SEEDING AND SOIL SUPPLEMENTS - FORMULA L	LB	26
SEEDING AND SOIL SUPPLEMENTS - FORMULA W	LB	19
PERMANENT ROLLED EROSION CONTROL PRODUCT, TYPE 5A	SY	0
ROCK, CLASS R-5	CY	4
ANTI-SEEP COLLAR	EA	2
CONCRETE OUTLET STRUCTURE WITHOUT GRATE	EA	1
6" PERFORATED PIPE	LF	328
UNDERDRAIN CLEANOUT	EA	4
AMENDED SOIL/PLANTING MIX	CY	410
PERMEABLE BLOCK PAVERS FOR SEDIMENT FOREBAY	SY	74
GEOGRID	SY	1,332

CERTIFIED CORRECT PLANS
Professional Engineer
Approved by Bureau of Technical Utility Services
PA PUBLIC UTILITY COMMISSION
ATTEST Secretary

EXTENDED DETENTION BASIN 6 DETAIL

0 25 50 FEET

FOR CONSTR. PLAN SEE SHEETS 305 AND 306

COMMONWEALTH OF PENNSYLVANIA
REGISTERED PROFESSIONAL ENGINEER
BRENAN ELIZABETH MCBRIDE
No. PE062933

FILE: pw:\\dfnet-pw.ben1ks.com:dfnet-pw-01\Documents\Projects\61636\OUTPUT\COMP_01\CIVIL\ROADWAY\R70-E10 Det27.dgn
DATE: 2/9/2022 TIME: 9:35:23 AM

DISTRICT	COUNTY	ROUTE	SECTION	SHEET
12-0	WESTMORELAND	0070	E10	306 OF 436
ROSTRAVER TOWNSHIP				

REVISION NUMBER	REVISIONS	DATE	BY

TERMINAL SECTION, SINGLE WITH CURVED W-BEAM GUIDE RAIL AT INTERSECTIONS AND TYPE 31-STRONG POST ANCHOR TERMINAL

RIDGE ROAD SURVEY & CONSTR. ℄
PROPOSED POLE (BY OTHERS)
RR-2
LEGAL R/W LINE FOR TOWNSHIP ROAD
LEGAL SLOPE EASEMENT
S36°36'59"E
T-355 (RIDGE ROAD)
LEGAL R/W LINE FOR TOWNSHIP ROAD
TO BE ELIMINATED (BY OTHERS)
VEHICULAR GATE FOR TYPE 1 RIGHT-OF-WAY FENCE
STORMWATER MANAGEMENT BASIN 6
STORMWATER MANAGEMENT BASIN 6 (REFER TO DETAIL ON SHEET 124.)
STORMWATER MANAGEMENT BASIN 6 ACCESS ROAD (REFER TO DETAIL ON SHEET 123.)
TO BE ELIMINATED (BY OTHERS)
LEGAL R/W LINE FOR TOWNSHIP ROAD
N86°13'51"E
W&LE RAILROAD SURVEY & CONSTR. ℄
SEE SHEET 325
PITTSBURGH & WEST VIRGINIA RAILROAD, AN UNINCORPORATED BUSINESS TRUST ORGANIZED IN PENNSYLVANIA C/O WHEELING & LAKE ERIE RAILWAY COMPANY (SUBLESSEE)
TEMPORARY CONSTRUCTION EASEMENT
PROPOSED POLE (BY OTHERS)
FIRE HYDRANT (BY OTHERS)
CONNECT GUIDE RAIL TO SINGLE FACE CONCRETE BARRIER
LEGAL R/W LINE
WHEELING & LAKE ERIE RAILROAD (ACTIVE)
SINGLE FACE CONCRETE BARRIER
TO BE ELIMINATED (BY OTHERS)
LEGAL DRAINAGE EASEMENT
TEMPORARY CONSTRUCTION EASEMENT
CONNECT GUIDE RAIL TO SINGLE FACE CONCRETE BARRIER
PERMANENT IMPACT ATTENUATING DEVICE, TYPE 2, TEST LEVEL 3, TANGENT (MASH)
THE JOHN L. CURNOW FAMILY TRUST, JOHN L CURNOW, TRUSTEE, DATED 2-8-08
LEGAL R/W LINE (EASEMENT FOR HIGHWAY PURPOSES)
STORMWATER MANAGEMENT BASIN 5 (REFER TO DETAILS ON SHEETS 121 TO 122.)
STORMWATER MANAGEMENT BASIN 5
LEGAL R/W LINE FOR TOWNSHIP ROAD (EASEMENT FOR HIGHWAY PURPOSES)
REFER TO PERMANENT RIGHT-OF-WAY SURFACE MONUMENT DETAIL ON SHEET 61.
TERMINAL SECTION, SINGLE AND TYPE 31-STRONG POST ANCHOR TERMINAL
SEE SHEET 321
SEE SHEET 305
SEE SHEET 307
DEPRESSED CURB ALONG DRIVEWAY AND IMPACT ATTENUATING DEVICE
PROPOSED POLE (BY OTHERS)
S.R. 0051 S.B.
S.R. 0051 SURVEY & CONSTR. ℄
S.R. 0051 N.B.
N23°47'32"W
TERMINAL SECTION, SINGLE AND TYPE 31-STRONG POST ANCHOR TERMINAL
6" PVC GAS
2" W COPPER IN 4" HDPE CASING
LEGAL R/W LINE
CONNECT GUIDE RAIL TO SINGLE FACE CONCRETE BARRIER
SINGLE FACE CONCRETE BARRIER
RELOCATED PAVED CONCRETE COMMERCIAL DRIVEWAY
UNDERGROUND TANK FILLED WITH WATER. CONTRACTOR TO USE CAUTION WITH HEAVY EQUIPMENT IN THIS AREA.
VISTA GRANDE PROPERTIES, A GENERAL PARTNERSHIP; VISTA GRANDE PROPERTIES
TEMPORARY CONSTRUCTION EASEMENT
FORMER SEPTIC TANK FILLED WITH ROCK
FORMER WELL
TO BE ELIMINATED (BY OTHERS)
LEGAL DRAINAGE EASEMENT
TEMPORARY CONSTRUCTION EASEMENT
FRAMAR, INC., A CORPORATION OR BODY POLITIC, CREATED AND EXISTING UNDER THE LAWS OF THE COMMONWEALTH OF PENNSYLVANIA
ROBERT GERDA
S.R. 0981 SURVEY & CONSTR. ℄
STOP WORK STA. 54+17.00 SEG. 0010 OFFSET 0417 S.R. 0981
LEGAL R/W LINE
S31°50'39"E
S.R. 0981
SEE SHEET 326
SEE SHEET 319

EXISTING STRUCTURE DATA

W.&L.E. RAILROAD OVER S.R. 0051
STA. 5032+45.06
(S.R. 0051 STA. 782+54.55)
STEEL RIVETED I-BEAMS (1 SPAN)
SPAN: 54'-6 1/8"
UNDERCLEARANCE: 13'-10" (MIN.)
SKEW: 77°15'0"
ROADWAY WIDTH: 47'-0"

PROPOSED STRUCTURE DATA

W&LE RAILROAD OVER S.R. 0051
STA. 5032+14.54
REPLACEMENT OF EXISTING RAILROAD BRIDGE
STEEL THRU GIRDER (1 SPAN)
SPAN: 111'-1"
UNDERCLEARANCE: 16'-6" (MIN.)
SKEW: 72°34'51"
ROADWAY WIDTH: 84'-0"

P.O.T. STA. 782+91.42 S.R. 0051 SURVEY & CONSTR. ℄ =
P.O.T. STA. 5032+14.54 W&LE RAILROAD SURVEY & CONSTR. ℄

FOR REFERENCE CIRCLES, SEE SHEET 13	FOR DRAINAGE INFORMATION, SEE CONTOUR, GRADING AND DRAINAGE PLAN SEE SHEET 416
	FOR S.R. 0051 PROFILE SEE SHEET 362
	FOR S.R. 0981 PROFILE SEE SHEETS 369
	FOR W&LE RAILROAD PROFILE SEE SHEETS 383 & 384

LEGEND
- CURVE DATA (SEE SHEETS 20 - 22)

0 25 50 FEET

CERTIFIED CORRECT PLANS
Professional Engineer
Approved by Bureau of Technical Utility Services
PA PUBLIC UTILITY COMMISSION
ATTEST Secretary

COMMONWEALTH OF PENNSYLVANIA
REGISTERED PROFESSIONAL ENGINEER
BRENAN ELIZABETH MCBRIDE
No. PE062933

SURVEY BOOK NO. 29874

FILE: pw:\\dfnet-pw.penndot.pa.gov\dfnet-pw-01\Documents\Projects\61636\OUTPUT\COMP_01\CIVIL\ROADWAY\R70-E10 25sc con20.dgn
DATE: 2/3/2022 TIME: 9:40:12 AM

DISTRICT	COUNTY	ROUTE	SECTION	SHEET
12-0	WESTMORELAND	0070	E10	324 OF 436
	ROSTRAVER TOWNSHIP			

REVISION NUMBER	REVISIONS	DATE	BY

STREAM ST-15

SHADOW

DENSE WOODS

115

ENTECH HOLDINGS LLC

STREAM ST-17

STREAM ST-16

DENSE VEG

SEE SHEET 323

130

PITTSBURGH & WEST VIRGINIA RAILROAD, AN UNINCORPORATED BUSINESS TRUST ORGANIZED IN PENNSYLVANIA C/O WHEELING & LAKE ERIE RAILWAY COMPANY (SUBLESSEE)

START WORK
STA. 5018+60.00
RAILROAD

TEMPORARY CONSTRUCTION EASEMENT

+00 29'

+00 30'

+60 55'

+51 48'

5017 S60°51'14"E

5018

5019

5020

5021

5022

5023

5024

TS

SC

WLE-1

+00 29'

COORDINATE PHASED TRACK TIE-IN WITH THE WHEELING & LAKE ERIE RAILROAD

TEMPORARY CONSTRUCTION EASEMENT

+36 34'

W&LE RAILROAD SURVEY & CONSTR. ℄

WHEELING & LAKE ERIE RAILROAD (ACTIVE)

+00 45'

+00 58'

S60°51'14"E

N83°37'37"E

98

MITCHELL SEYDOR AND PAMELA PIRILLA SEYDOR, HIS WIFE

97

VIOLA MOSKAL AND EDWARD W. MOSKAL, AS JOINT TENANTS WITH RIGHT OF SURVIVORSHIP AND NOT AS TENANTS IN COMMON

SEE SHEET 325

CERTIFIED CORRECT PLANS
Professional Engineer
Approved by Bureau of Technical Utility Services
PA PUBLIC UTILITY COMMISSION
ATTEST Secretary

FOR REFERENCE CIRCLES, SEE SHEET 13
FOR DRAINAGE INFORMATION, SEE CONTOUR, GRADING AND DRAINAGE PLAN SEE SHEET 434
FOR W&LE RAILROAD PROFILE SEE SHEET 382

LEGEND

- CURVE DATA (SEE SHEETS 20 - 22)

0 25 50 FEET

SURVEY BOOK NO. 29874

COMMONWEALTH OF PENNSYLVANIA
REGISTERED PROFESSIONAL
BRENAN ELIZABETH MCBRIDE
ENGINEER
No. PE062933

FILE: pw:\\pfnet-pw.penndot.gov.pfnet-pw-01\Documents\Projects\61636\OUTPUT\COMP_01\CIVIL\ROAD\SR70-E10 25sc con38.dgn
DATE: 2/9/2022 TIME: 9:43:40 AM

DISTRICT	COUNTY	ROUTE	SECTION	SHEET
12-0	WESTMORELAND	0070	E10	325 OF 436
	ROSTRAVER TOWNSHIP			

REVISION NUMBER	REVISIONS	DATE	BY

HYDRAULIC DATA:
DRAINAGE AREA: 1.33 SQ. MI.

50 YEAR FLOOD (DESIGN)
MAGNITUDE = 570 CFS
EXISTING HEADWATER ELEV. 971.59
PROPOSED HEADWATER ELEV. 971.59

100 YEAR FLOOD
MAGNITUDE = 691 CFS
EXISTING HEADWATER ELEV. 972.58
PROPOSED HEADWATER ELEV. 972.58

EXISTING STRUCTURE DATA
W.&L.E. RAILROAD OVER CEDAR CREEK
STA. 5028+16.49
CONCRETE BOX CULVERT
SPAN: 10'-0"
LENGTH: 90'-4"
UNDERCLEARANCE: 10'-0"
(TO REMAIN)

PROPOSED STRUCTURE DATA
W&LE RAILROAD OVER CEDAR CREEK
STA. 5028+15.15
EXTENSION OF EXISTING
CONCRETE BOX CULVERT
LENGTH: 74'-6"
REMOVAL OF EXISTING CULVERT
LENGTH: 44'-6"

SEE SHEET 323

130
PITTSBURGH & WEST VIRGINIA RAILROAD, AN UNINCORPORATED BUSINESS TRUST ORGANIZED IN PENNSYLVANIA C/O WHEELING & LAKE ERIE RAILWAY COMPANY (SUBLESSEE)

AREA DESIGNATED FOR PLACEMENT OF EXCESS REGULATED FILL FROM RAILROAD EXCAVATION ONLY (EXCLUDES AREA IDENTIFIED AS RESIDUAL WASTE ON THE EAST SIDE OF S.R. 0051). RAILROAD EXCAVATION MUST REMAIN ON RAILROAD PROPERTY. COORDINATE THE USE OF THIS AREA WITH THE DEPARTMENT REPRESENTATIVE.

TEMPORARY CONSTRUCTION EASEMENT

TEMPORARY CONSTRUCTION EASEMENT

TEMPORARY CONSTRUCTION EASEMENT

LEGAL DRAINAGE EASEMENT

SEE SHEET 324

SEE SHEET 306

W&LE RAILROAD SURVEY & CONSTR. ℄

WLE-1

STREAM ST-16

STREAM ST-17

STREAM ST-11

STREAM ST-10

STREAM ST-10

DENSE VEGETATION

SHADOW

BRUSH

WOODS

CONC.

SHED

SHED

SHED

DISTRICT	COUNTY	ROUTE	SECTION	SHEET
12-0	WESTMORELAND	0070	E10	326 OF 436

ROSTRAVER TOWNSHIP

REVISION NUMBER	REVISIONS	DATE	BY

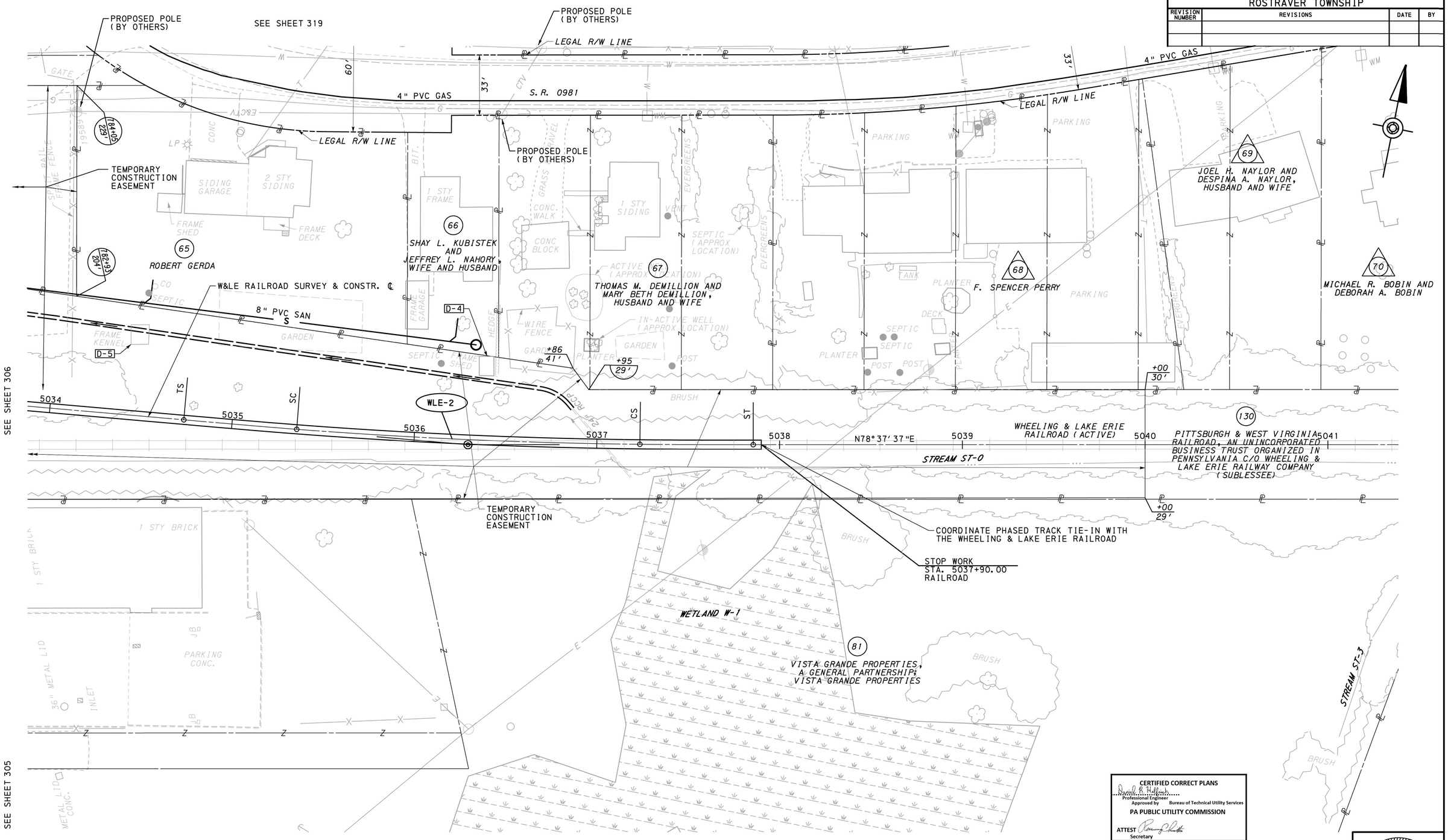

CERTIFIED CORRECT PLANS
Professional Engineer
Approved by Bureau of Technical Utility Services
PA PUBLIC UTILITY COMMISSION
ATTEST
Secretary

FOR REFERENCE CIRCLES, SEE SHEET 13
FOR DRAINAGE INFORMATION, SEE CONTOUR, GRADING AND DRAINAGE PLAN SEE SHEET 436
FOR W&LE RAILROAD PROFILE SEE SHEET 384

LEGEND

- CURVE DATA (SEE SHEETS 20 - 22)

0 25 50 FEET

SURVEY BOOK NO. 29874

COMMONWEALTH OF PENNSYLVANIA
REGISTERED PROFESSIONAL
BREHAN ELIZABETH MCBRIDE
ENGINEER
No. PE062933

FILE: pw:\\gfnet-pw.bentley.com:gfnet-pw-01\Documents\Projects\61636\OUTPUT\COMP_01\CIVIL\ROAD\SR70-E10 25sc con40.dgn
DATE: 2/9/2022 TIME: 9:43:52 AM

DISTRICT	COUNTY	ROUTE	SECTION	SHEET
12-0	WESTMORELAND	0070	E10	362 OF 436
	ROSTRAVER TOWNSHIP			

REVISION NUMBER	REVISIONS	DATE	BY

S.R. 0051

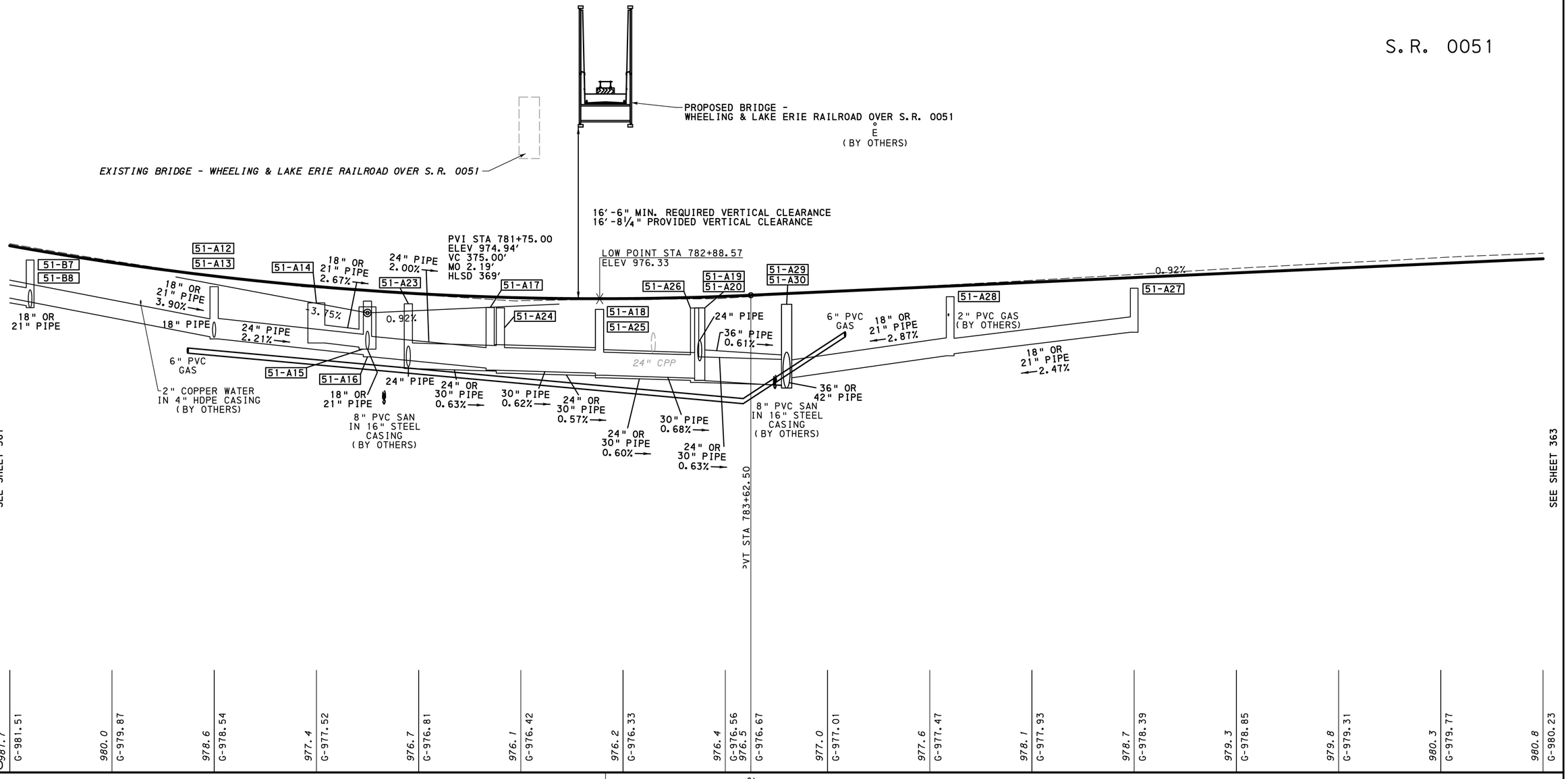

DATUM 930

| | | |

DISTRICT	COUNTY	ROUTE	SECTION	SHEET
12-0	WESTMORELAND	0070	E10	382 OF 436
	ROSTRAVER TOWNSHIP			

REVISION NUMBER	REVISIONS	DATE	BY

W&LE RAILROAD

START WORK
STA. 5018+60.00
RAILROAD

PVI STA 5018+60.00
ELEV 1001.32'

AREMA VERTICAL CURVE CALCULATION
L = (D*V*V*K)/A
L = (ABS(G2-G1)*V*V*K)/A
L = (ABS(-0.00505-0.0)*40*40*2.15)/0.10
L = 173.72 FT

A = 0.10 FT/S/S
D = ABS(G2-G1)
K = 2.15
V = 40 MPH

PVI STA 5022+17.83
ELEV 999.51'
VC 175.00'
MO 0.11'

LOW POINT STA 5023+05.33
ELEV 999.51

-0.50%

-0.50%

0.00%

PVC STA 5021+30.33

PVT STA 5023+05.33

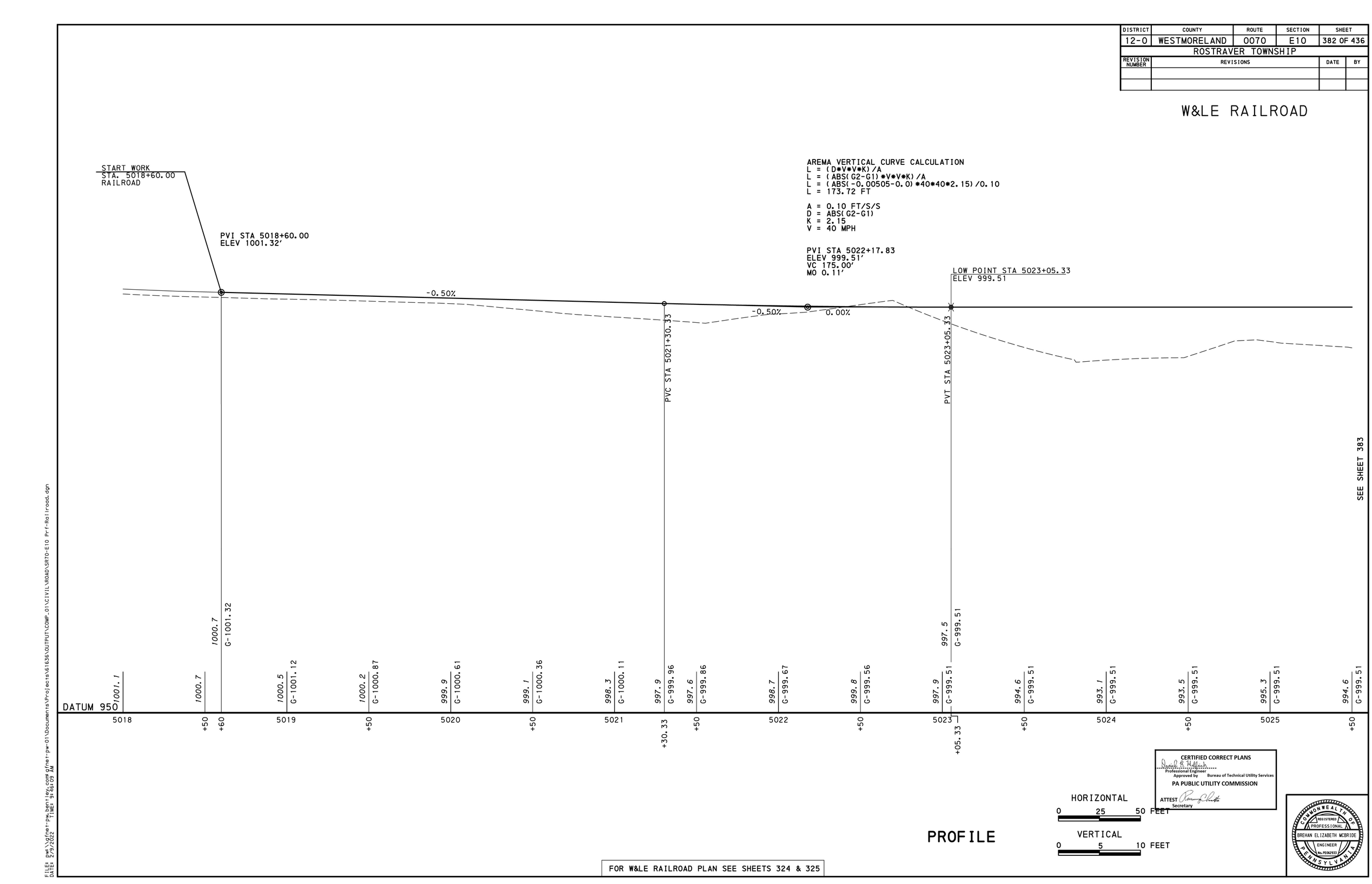

SEE SHEET 383

CERTIFIED CORRECT PLANS
Professional Engineer
Approved by Bureau of Technical Utility Services
PA PUBLIC UTILITY COMMISSION
ATTEST Secretary

HORIZONTAL
0 25 50 FEET

VERTICAL
0 5 10 FEET

PROFILE

FOR W&LE RAILROAD PLAN SEE SHEETS 324 & 325

COMMONWEALTH OF PENNSYLVANIA
REGISTERED PROFESSIONAL ENGINEER
BREHAN ELIZABETH MCBRIDE
No. PE062933

FILE: pw:\\pfnet-pw.bentley.com:pfnet-pw-01\Documents\Projects\61636\OUTPUT\COMP_01\C1VIL\RDAD\SR70-E10 Prf-Railroad.dgn
DATE: 2/2/2022 TIME: 8:46:09 AM

DISTRICT	COUNTY	ROUTE	SECTION	SHEET
12-0	WESTMORELAND	0070	E10	383 OF 436

ROSTRAVER TOWNSHIP

REVISION NUMBER	REVISIONS	DATE	BY

AREMA VERTICAL CURVE CALCULATION
L = (D*V*V*K)/A
L = (ABS(G2-G1)*V*V*K)/A
L = (ABS(-0.0--0.009)*40*40*2.15)/0.10
L = 309.60 FT

A = 0.10 FT/S/S
D = ABS(G2-G1)
K = 2.15
V = 40 MPH

PVI STA 5029+95.00
ELEV 999.51'
VC 310.00'
MO -0.35'

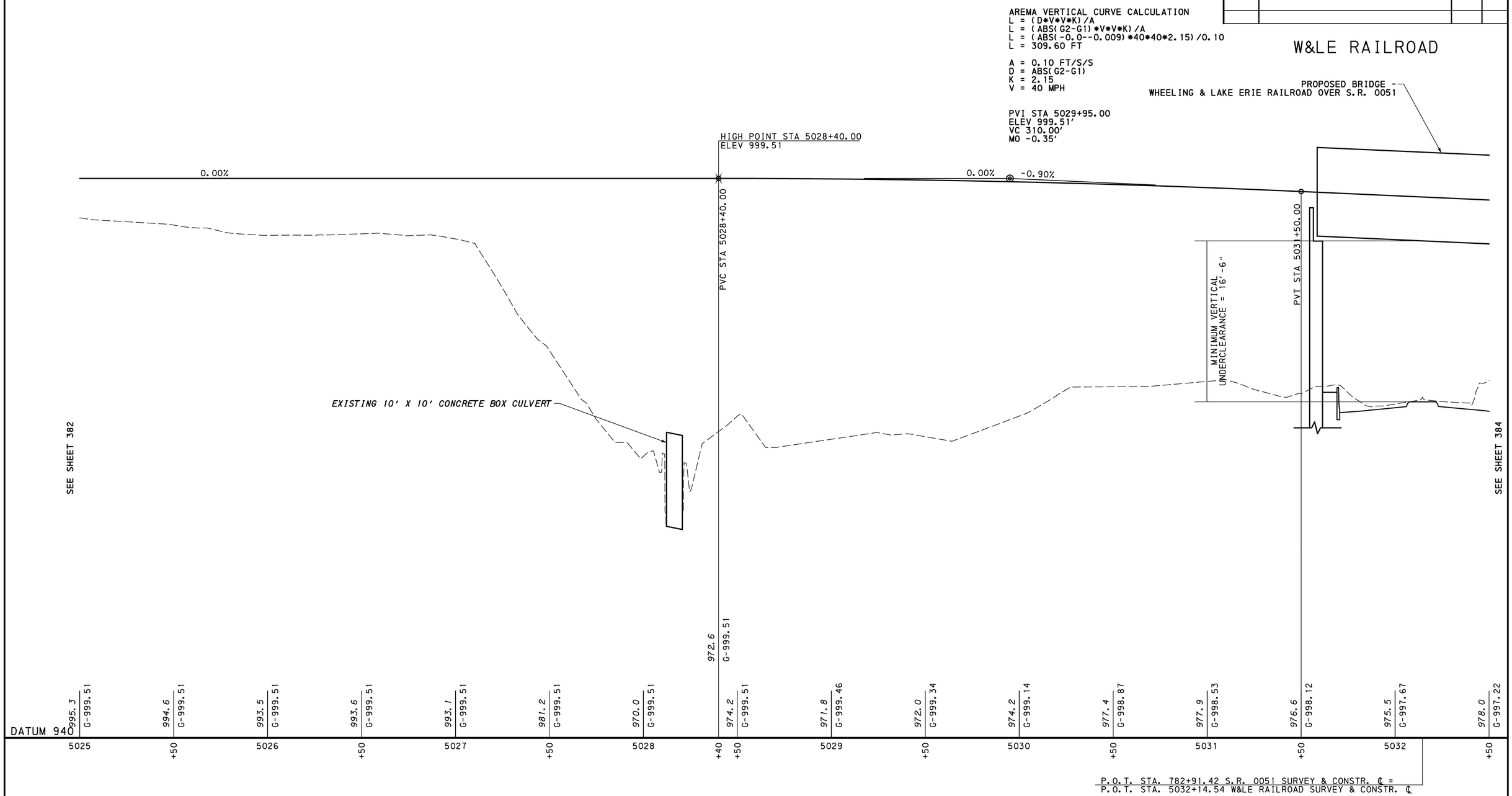

P.O.T. STA. 782+91.42 S.R. 0051 SURVEY & CONSTR. ℄ =
P.O.T. STA. 5032+14.54 W&LE RAILROAD SURVEY & CONSTR. ℄

HORIZONTAL
0 25 50 FEET

VERTICAL
0 5 10 FEET

PROFILE

CERTIFIED CORRECT PLANS
Professional Engineer
Approved by Bureau of Technical Utility Services
PA PUBLIC UTILITY COMMISSION
ATTEST
Secretary

COMMONWEALTH OF PENNSYLVANIA
REGISTERED PROFESSIONAL
BREHAN ELIZABETH MCBRIDE
ENGINEER
No. PE062933

FOR W&LE RAILROAD PLAN SEE SHEETS 306 & 325

FILE: pw:\\gfnet-pw.bentley.com:gfnet-pw-01\Documents\Projects\61636\OUTPUT\COMP_01\CIVIL\ROAD\SR70-E10 Prf-Railroad.dgn
DATE: 2/9/2022 TIME: 9:46:10 AM

DISTRICT	COUNTY	ROUTE	SECTION	SHEET
12-0	WESTMORELAND	0070	E10	384 OF 436
	ROSTRAVER TOWNSHIP			

REVISION NUMBER	REVISIONS	DATE	BY

W&LE RAILROAD

AREMA VERTICAL CURVE CALCULATION
L = (D*V*V*K)/A
L = (ABS(G2-G1)*V*V*K)/A
L = (ABS(-0.009--0.00561)*40*40*2.15)/0.10
L = 116.62 FT

A = 0.10 FT/S/S
D = ABS(G2-G1)
K = 2.15
V = 40 MPH

PVI STA 5036+49.80
ELEV 993.62'
VC 120.00'
MO 0.05'

PVI STA 5037+90.00
ELEV 992.83'

STOP WORK
STA. 5037+90.00
RAILROAD

PROPOSED BRIDGE -
WHEELING & LAKE ERIE RAILROAD OVER S.R. 0051

-0.90%

-0.90%

-0.56%

-0.56%

MINIMUM VERTICAL
UNDERCLEARANCE = 16'-6"

PVC STA 5035+89.80

PVT STA 5037+09.80

SEE SHEET 383

| | | |

DISTRICT	COUNTY	ROUTE	SECTION	SHEET
12-0	WESTMORELAND	0070	E10	416 OF 436

ROSTRAVER TOWNSHIP

REVISION NUMBER	REVISIONS	DATE	BY

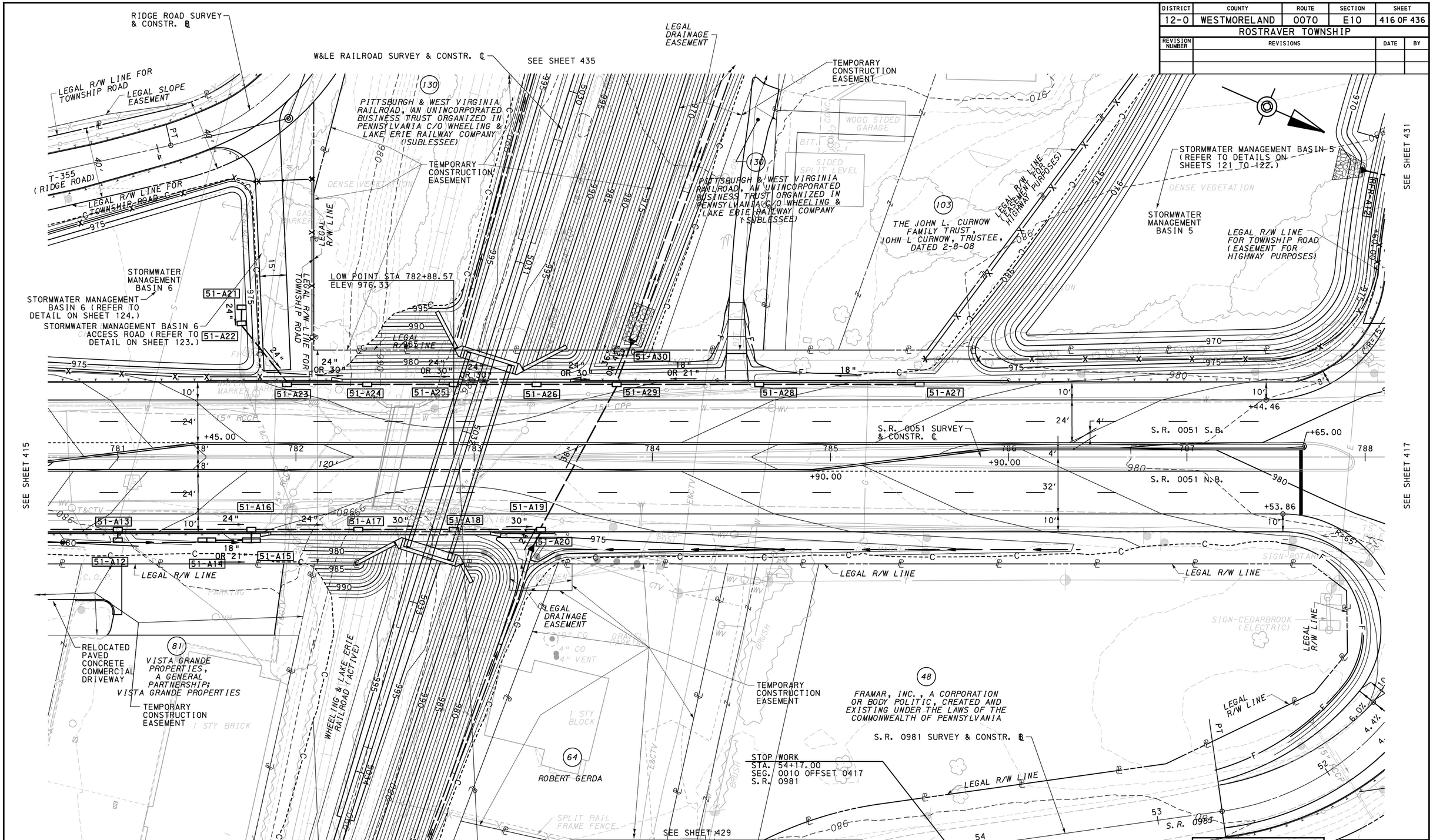

P.O.T. STA. 782+91.42 S.R. 0051 SURVEY & CONSTR. ℄ =
P.O.T. STA. 5032+14.54 W&LE RAILROAD SURVEY & CONSTR. ℄

FOR CONSTR. PLAN SEE SHEET 306
FOR DRAINAGE TABULATION NOTES SEE SHEETS 385 - 396
FOR S.R. 0051 PROFILE SEE SHEET 362
FOR S.R. 0981 PROFILE SEE SHEET 369
FOR W&LE RAILROAD PROFILE SEE SHEETS 383 & 384

CONTOUR GRADING AND DRAINAGE PLAN SHEET

0 25 50 FEET

CERTIFIED CORRECT PLANS
Professional Engineer
Approved by Bureau of Technical Utility Services
PA PUBLIC UTILITY COMMISSION
ATTEST
Secretary

COMMONWEALTH OF PENNSYLVANIA
REGISTERED PROFESSIONAL
BREHAN ELIZABETH MCBRIDE
ENGINEER
No. PE062933

FILE: pw:\\gfnet-pw.bentley.com:gfnet-pw-01\Documents\Projects\61636\OUTPUT\COMP_01\CIVIL\CGDP\SR70-E10 25sc CGD20.dgn
DATE: 2/9/2022 TIME: 9:49:57 AM

DISTRICT	COUNTY	ROUTE	SECTION	SHEET
12-0	WESTMORELAND	0070	E10	434 OF 436
ROSTRAVER TOWNSHIP				

REVISION NUMBER	REVISIONS	DATE	BY

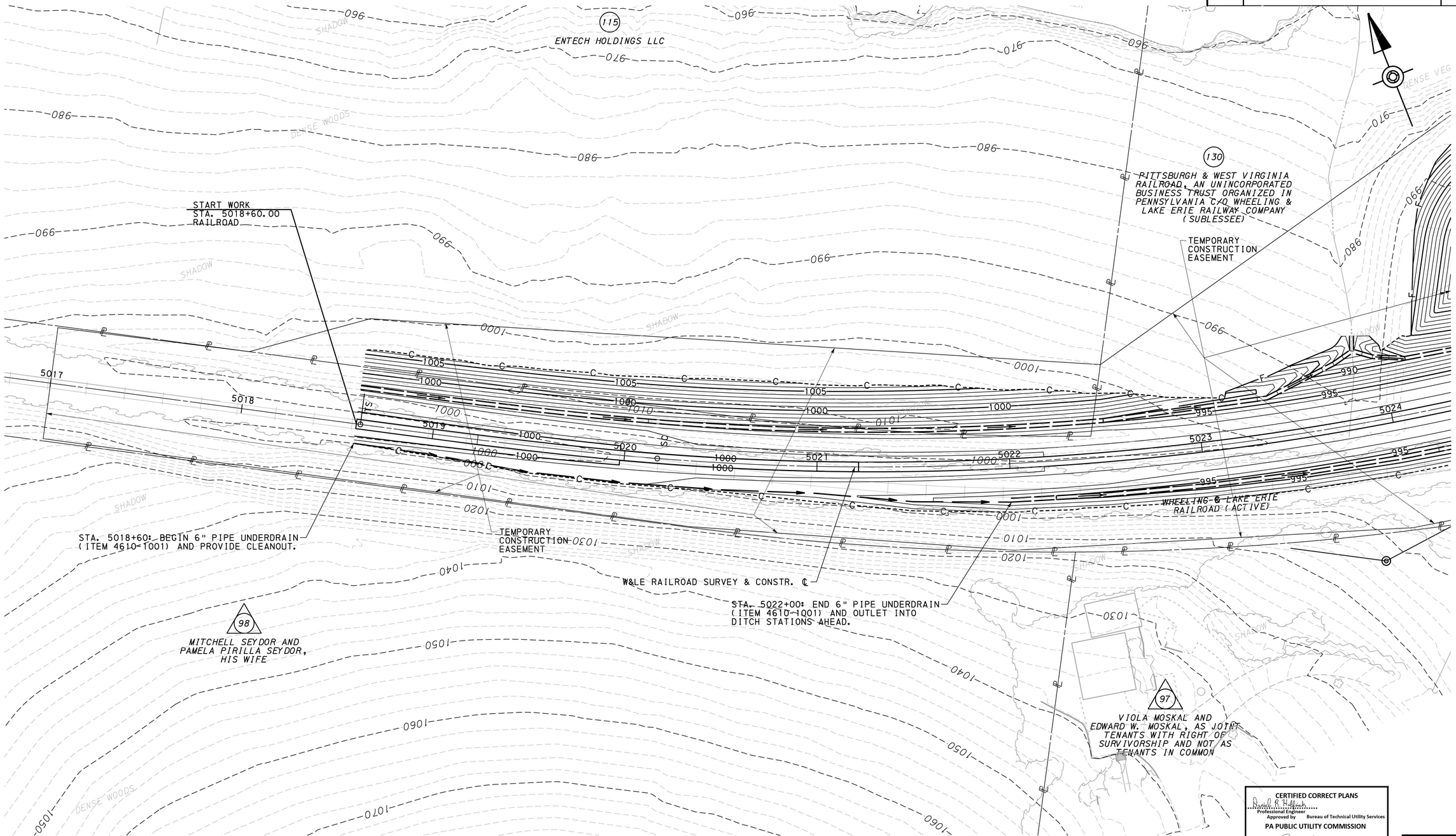

CERTIFIED CORRECT PLANS
Professional Engineer
Approved by Bureau of Technical Utility Services
PA PUBLIC UTILITY COMMISSION
ATTEST
Secretary

CONTOUR GRADING AND DRAINAGE PLAN SHEET

0 25 50 FEET

COMMONWEALTH OF PENNSYLVANIA
REGISTERED PROFESSIONAL
BREHAN ELIZABETH MCBRIDE
ENGINEER
No. PE062933

FOR CONSTR. PLAN SEE SHEET 324

FOR W&LE RAILROAD PROFILE SEE SHEET 382

FILE: pw:\\gfnet-pw.bentley.com:gfnet-pw-01\Documents\Projects\61636\OUTPUT\COMP_01\CIVIL\CGDP\SR70-E10 25sc CGD38.dgn
DATE: 2/9/2022 TIME: 9:52:28 AM

DISTRICT	COUNTY	ROUTE	SECTION	SHEET
12-0	WESTMORELAND	0070	E10	435 OF 436
ROSTRAVER TOWNSHIP				

REVISION NUMBER	REVISIONS	DATE	BY

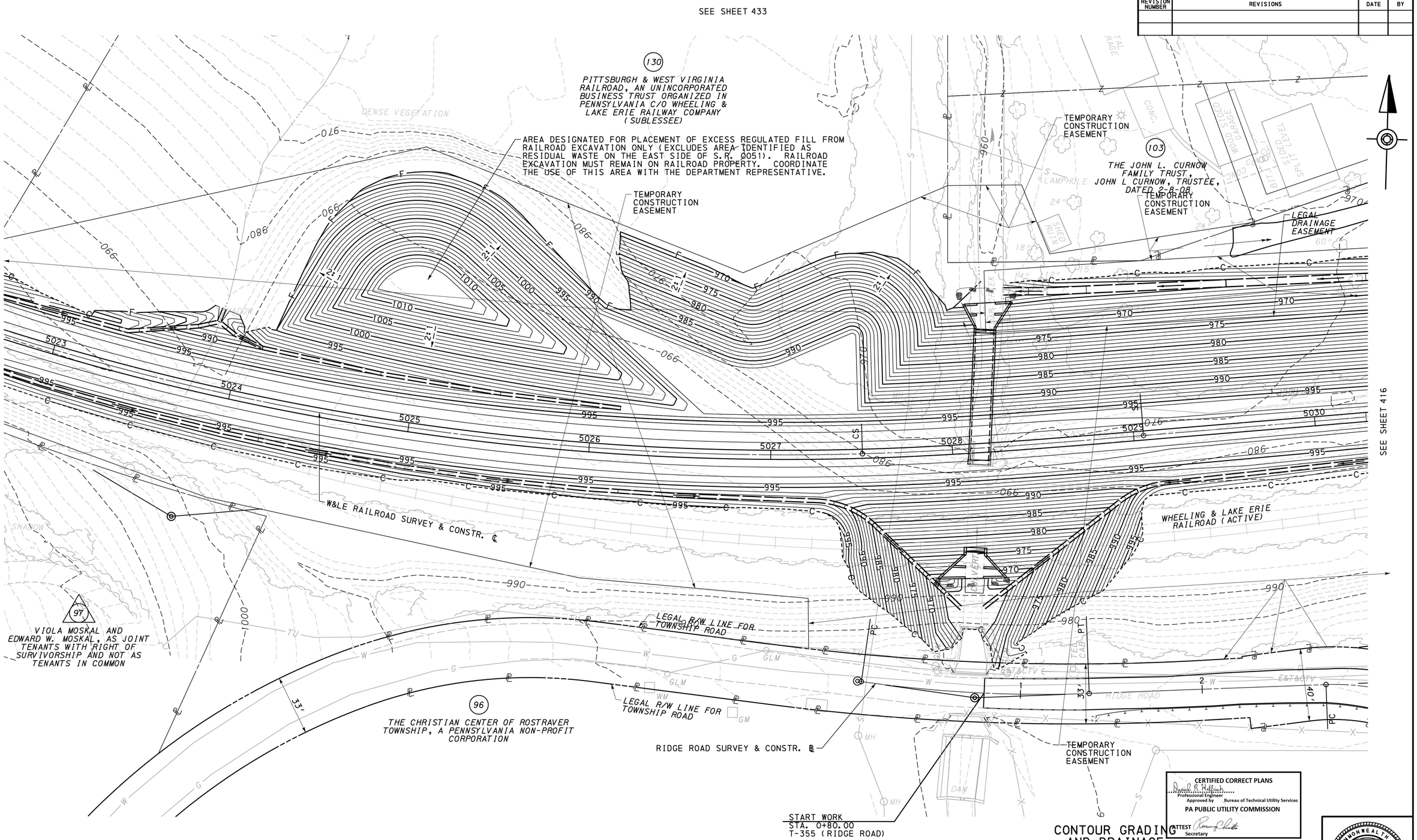

CERTIFIED CORRECT PLANS
Professional Engineer
Approved by Bureau of Technical Utility Services
PA PUBLIC UTILITY COMMISSION
ATTEST
Secretary

CONTOUR GRADING AND DRAINAGE PLAN SHEET

0 25 50 FEET

COMMONWEALTH OF PENNSYLVANIA
REGISTERED PROFESSIONAL
BREHAN ELIZABETH MCBRIDE
ENGINEER
No. PE062933

FOR CONSTR. PLAN SEE SHEET 325
FOR W&LE RAILROAD PROFILE SEE SHEET 383

FILE: pw:\\gfnet-pw.bentley.com:gfnet-pw-01\Documents\Projects\61636\OUTPUT\COMP_01\CIVIL\CGDP\SR70-E10 25sc CGD39.dgn
DATE: 2/9/2022 TIME: 9:52:33 AM

DISTRICT	COUNTY	ROUTE	SECTION	SHEET
12-0	WESTMORELAND	0070	E10	436 OF 436

ROSTRAVER TOWNSHIP

REVISION NUMBER	REVISIONS	DATE	BY

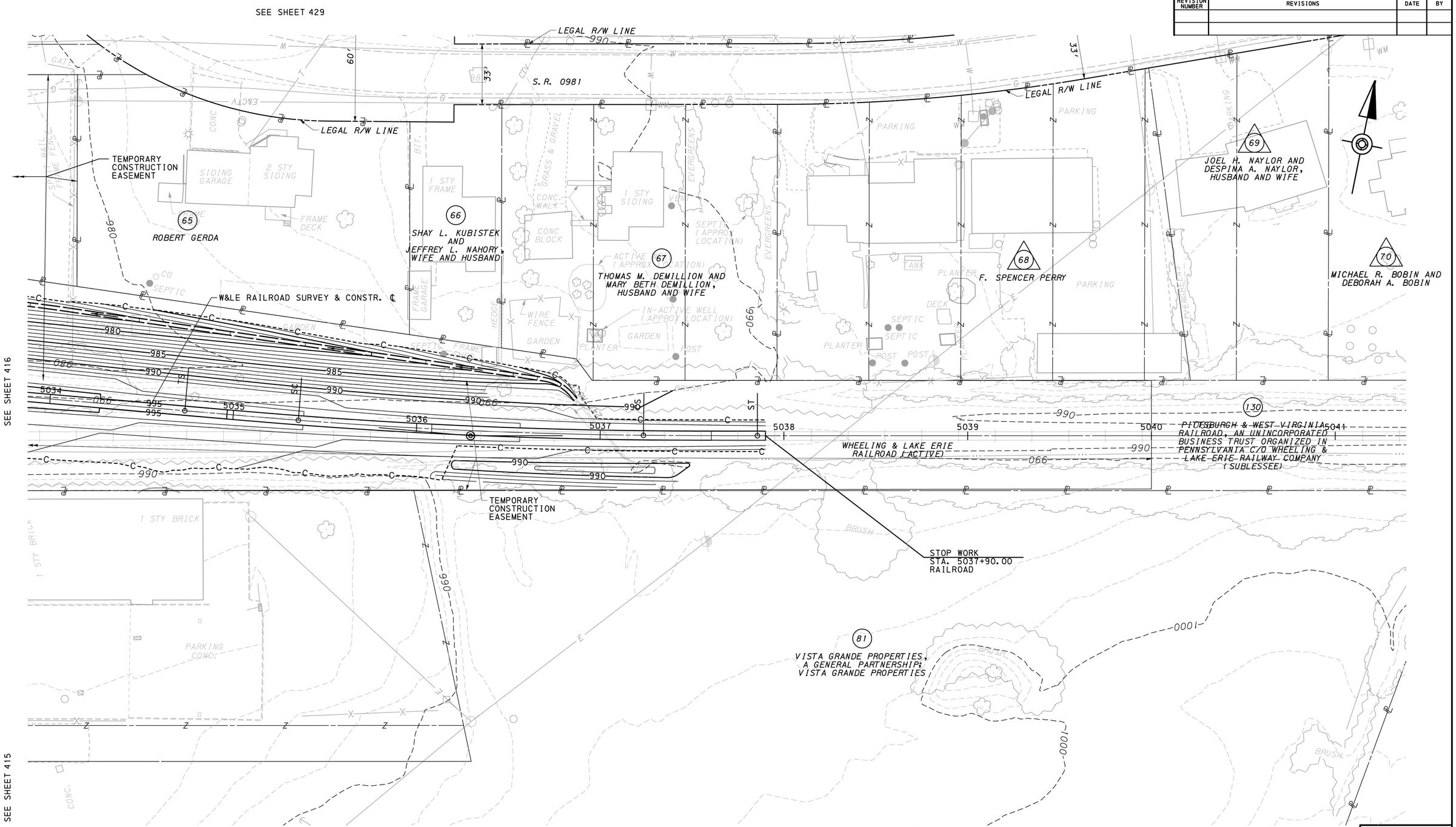

FOR CONSTR. PLAN SEE SHEET 326

FOR W&LE RAILROAD PROFILE SEE SHEET 384

CERTIFIED CORRECT PLANS
Professional Engineer
Approved by Bureau of Technical Utility Services
PA PUBLIC UTILITY COMMISSION
ATTEST
Secretary

CONTOUR GRADING AND DRAINAGE PLAN SHEET

0 25 50 FEET

COMMONWEALTH OF PENNSYLVANIA
REGISTERED PROFESSIONAL
BREHAN ELIZABETH MCBRIDE
ENGINEER
No. PE062933

FILE: pw:\\gfnet-pw.bentley.com:gfnet-pw-01\Documents\Projects\61636\OUTPUT\COMP_01\CIVIL\CGDP\SR70-E10 25sc CGD40.dgn
DATE: 2/9/2022 TIME: 9:52:38 AM

Dist.	County	Route	Sect.	Prelim. Bk. No.	Final Bk. No.	Sheet No.
12-0	WESTMORELAND	0070	E10			157 OF 287

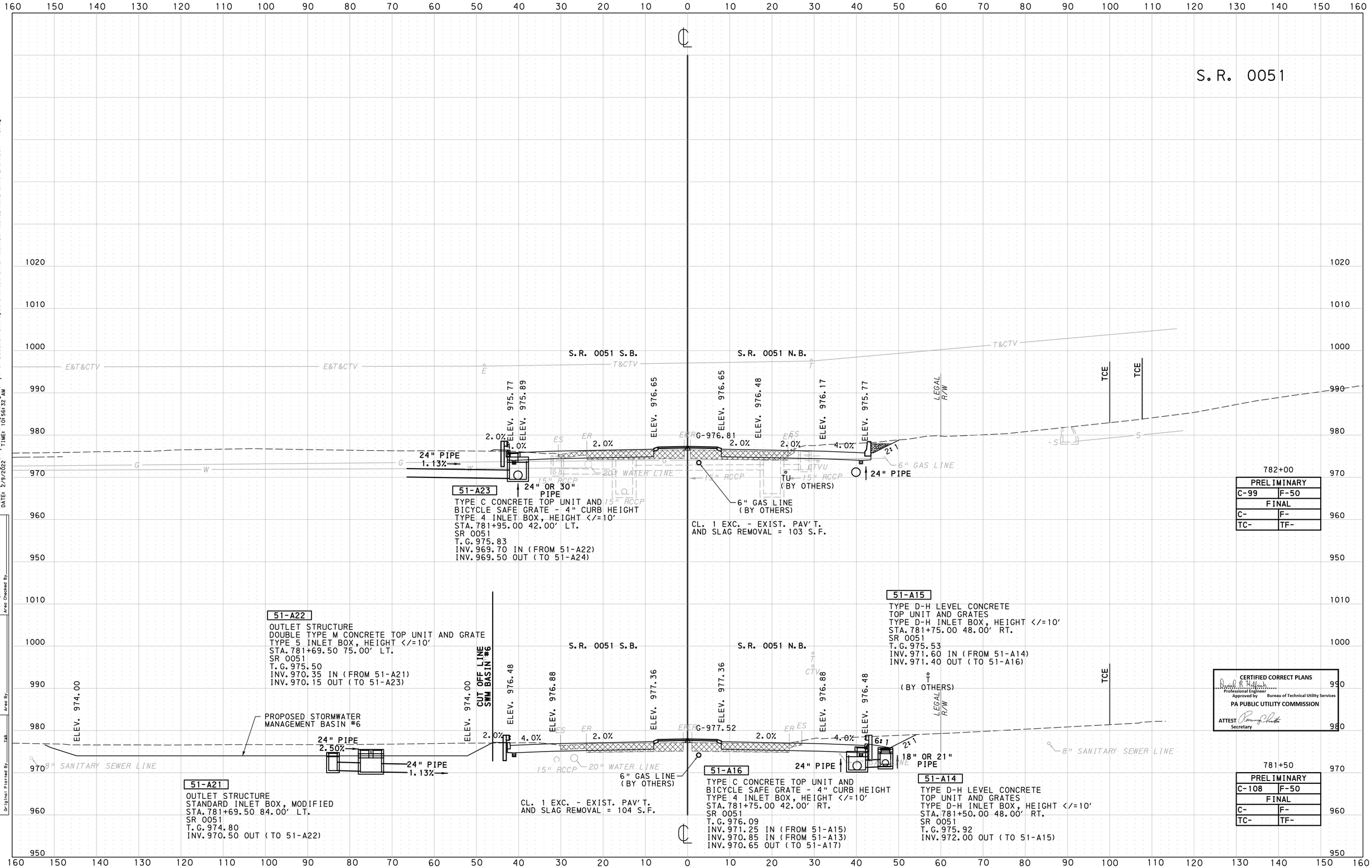

FILE: pw:\\gfnet-pw.bentley.com:gfnet-pw-01\Documents\Projects\61636\INPUT\COMP_01\CIVIL\ROAD\SR70-E10 XS01 - FD.dgn
DATE: 2/9/2022 TIME: 10:56:32 AM

Finals Plotted By
Finals Checked By
Area By
Area Checked By
Original Checked By
Template By
Area By
Application No.
Route No.
Original Plotted By TAB

PENNSYLVANIA DEPARTMENT OF TRANSPORTATION
CROSS SECTIONS

Dist.	County	Route	Sect.	Prelim. Bk. No.	Final Bk. No.	Sheet No.
12-0	WESTMORELAND	0070	E10			158 OF 287

S.R. 0051

S.R. 0051 S.B.

S.R. 0051 N.B.

CUT OFF LINE
SWM BASIN #6

LEGAL R/W

ELEV. 975.29
ELEV. 975.69
ELEV. 976.17
ELEV. 976.17
ELEV. 975.69
ELEV. 975.32

2:1
4.0%
2.0%
G-976.33
2.0%
4.0%
2:1

ER
15" RCCP
20" WATER LINE
24" CPP
10" RCCP
6" GAS LINE

24" OR 30" PIPE

6" GAS LINE (BY OTHERS)
(BY OTHERS)

30" PIPE

TCE
206.03'

783+00

PRELIMINARY
C-139 F-50
FINAL
C- F-
TC- TF-

51-A25
TYPE M CONCRETE TOP UNIT
AND BICYCLE SAFE GRATE
TYPE 4 INLET BOX, HEIGHT </=10'
STA. 782+88.50 42.00' LT.
SR 0051
T.G. 975.29
INV. 968.80 IN (FROM 51-A24)
INV. 968.60 OUT (TO 51-A26)

CL. 1 EXC. - EXIST. PAV'T.
AND SLAG REMOVAL = 102 S.F.

51-A18
TYPE M CONCRETE TOP UNIT
AND BICYCLE SAFE GRATE
TYPE 4 INLET BOX, HEIGHT </=10'
STA. 782+88.50 42.00' RT.
SR 0051
T.G. 975.29
INV. 969.05 IN (FROM 51-A17)
INV. 968.85 OUT (TO 51-A19)

S.R. 0051 S.B.

S.R. 0051 N.B.

LEGAL R/W

ELEV. 975.38
ELEV. 975.78
ELEV. 976.26
ELEV. 976.26
ELEV. 975.78
ELEV. 975.38

2:1
4.0%
2.0%
G-976.42
2.0%
4.0%
2:1

ER
15" RCCP
20" WATER LINE
(BY OTHERS) TU
10" RCCP
6" GAS LINE

24" OR 30" PIPE

6" GAS LINE (BY OTHERS)

30" PIPE

CERTIFIED CORRECT PLANS
Professional Engineer
Approved by Bureau of Technical Utility Services
PA PUBLIC UTILITY COMMISSION
ATTEST Secretary

782+50

PRELIMINARY
C-1286 F-26
FINAL
C- F-
TC- TF-

51-A24
TYPE M CONCRETE TOP UNIT
AND BICYCLE SAFE GRATE
TYPE 4 INLET BOX, HEIGHT </=10'
STA. 782+40.00 42.00' LT.
SR 0051
T.G. 975.43
INV. 969.25 IN (FROM 51-A23)
INV. 969.05 OUT (TO 51-A25)

CL. 1 EXC. - EXIST. PAV'T.
AND SLAG REMOVAL = 47 S.F.

51-A17
TYPE M CONCRETE TOP UNIT
AND BICYCLE SAFE GRATE
TYPE 4 INLET BOX, HEIGHT </=10'
STA. 782+35.00 42.00' RT.
SR 0051
T.G. 975.46
INV. 969.55 IN (FROM 51-A16)
INV. 969.35 OUT (TO 51-A18)

SCALE: 1 INCH = 10 FEET

FILE: pw:\\gfnet-PW:Documents\Projects\61636\INPUT\COMP_01\C1V1L\ROAD\SR70-E10 XS01 - FD.dgn
DATE: 2/9/2022 TIME: 10:56:49 AM

Finals Plotted By	
Finals Checked By	
Area By	
Area Checked By	
Original Checked By	
Template By	
Area By	
Application No.	
Route No.	
Original Plotted By	IAB

PENNSYLVANIA DEPARTMENT OF TRANSPORTATION
CROSS SECTIONS

Dist.	County	Route	Sect.	Prelim. Bk. No.	Final Bk. No.	Sheet No.
12-0	WESTMORELAND	0070	E10			159 OF 287

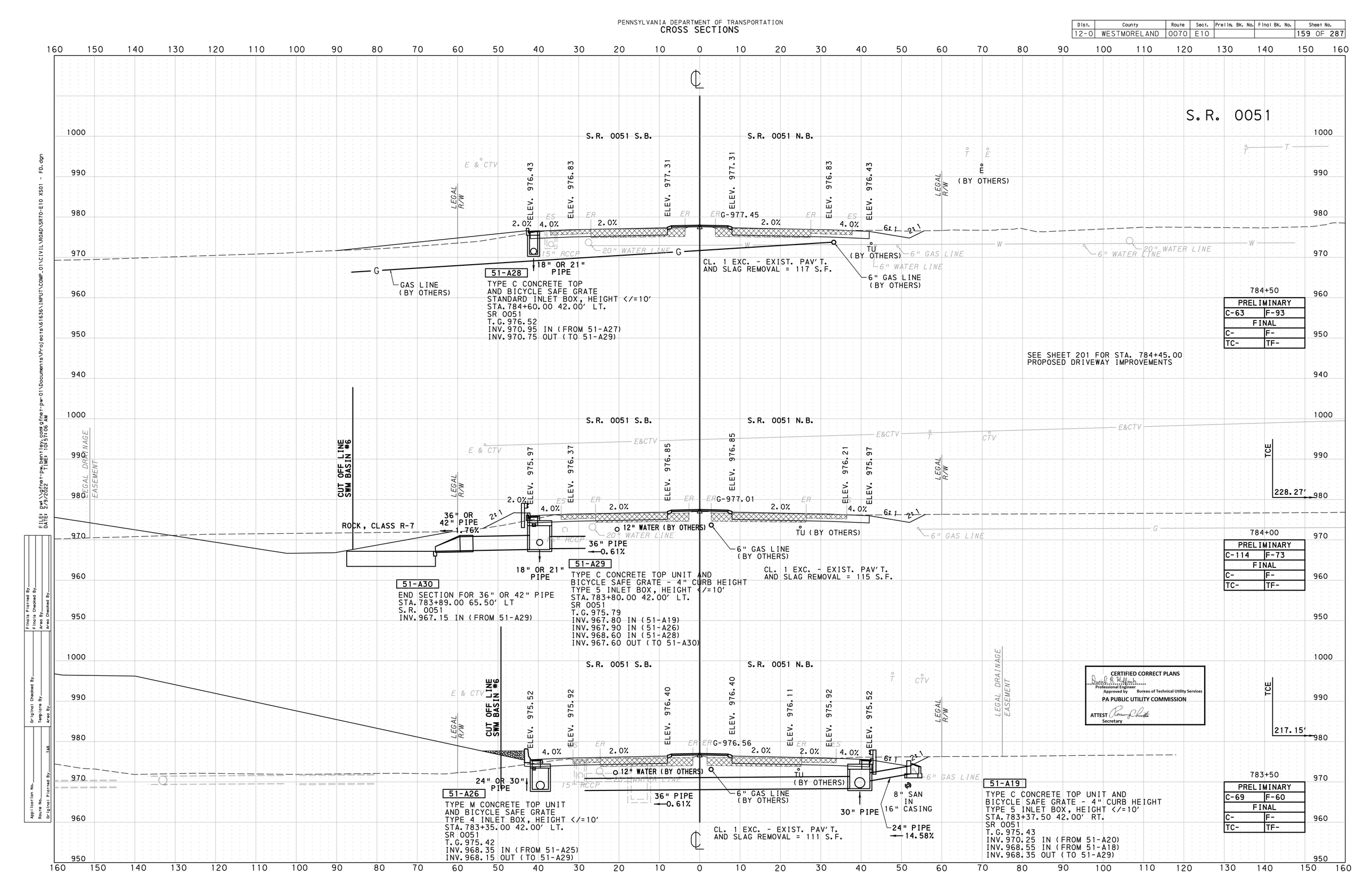

File: pw:\\gfnet-pw.bentley.com:gfnet-pw-01\Documents\Projects\61636\INPUT\COMP_01\C1V1L\ROAD\SR70-E10 XS01 - FD.dgn
Date: 2/9/2022 Time: 10:51:06 AM

Finals Plotted By
Finals Checked By
Area By
Area Checked By
Original Checked By
Template By
Area By
Application No.
Route No. 1AB
Original Plotted By

PENNSYLVANIA DEPARTMENT OF TRANSPORTATION
CROSS SECTIONS

Dist.	County	Route	Sect.	Prelim. Bk. No.	Final Bk. No.	Sheet No.
12-0	WESTMORELAND	0070	E10			241 OF 287

WHEELING & LAKE ERIE RAILROAD

TCE

TCE

START WORK
STA. 5018+60.00
RAILROAD

5018+50

PRELIMINARY	
C-0	F-0
FINAL	
C-	F-
TC-	TF-

CERTIFIED CORRECT PLANS
Professional Engineer
Approved by Bureau of Technical Utility Services
PA PUBLIC UTILITY COMMISSION
ATTEST Secretary

SCALE: 1 INCH = 10 FEET

FILE: pw:\\pfnet-pw.bentley.com:pfnet-pw-01\Documents\Projects\61636\INPUT\COMP_01\C1V1L\ROAD\SR70-E10 XS01 - FD.dgn
DATE: 2/9/2022 TIME: 11:19:59 AM

Finals Plotted By
Finals Checked By
Area By
Area Checked By
Original Checked By
Template By
Area By
Application No.
Route No.
Original Plotted By TAB

PENNSYLVANIA DEPARTMENT OF TRANSPORTATION
CROSS SECTIONS

Dist.	County	Route	Sect.	Prelim. Bk. No.	Final Bk. No.	Sheet No.
12-0	WESTMORELAND	0070	E10			242 OF 287

WHEELING & LAKE ERIE RAILROAD

TCE

ELEV. 996.56

ELEV. 998.56

G-1001.12

2:1

2:1

40:1

40:1

CL. 2 EXC. = 4 S.F.

ELEV. 998.91

(WORK BY OTHERS)

6" PIPE UNDERDRAIN, TYPE II
BACKFILL - WITH CLEANOUT

TCE

5019+00

PRELIMINARY	
C-201	F-0
FINAL	
C-	F-
TC-	TF-

CERTIFIED CORRECT PLANS
Professional Engineer
Approved by Bureau of Technical Utility Services
PA PUBLIC UTILITY COMMISSION
ATTEST Secretary

Application No.
Route No. 1AB
Original Plotted By
Original Checked By
Template By
Area By
Finals Plotted By
Finals Checked By
Area By
Area Checked By

File: pw:\\gfnet-pw.bentley.com:gfnet-pw-01\Documents\Projects\61636\INPUT\COMP_01\C1V1L\ROAD\SR70-E10 XS01 - F0.dgn
DATE: 2/9/2022 TIME: 11:20:18 AM

SCALE: 1 INCH = 10 FEET

PENNSYLVANIA DEPARTMENT OF TRANSPORTATION
CROSS SECTIONS

Dist.	County	Route	Sect.	Prelim. Bk. No.	Final Bk. No.	Sheet No.
12-0	WESTMORELAND	0070	E10			243 OF 287

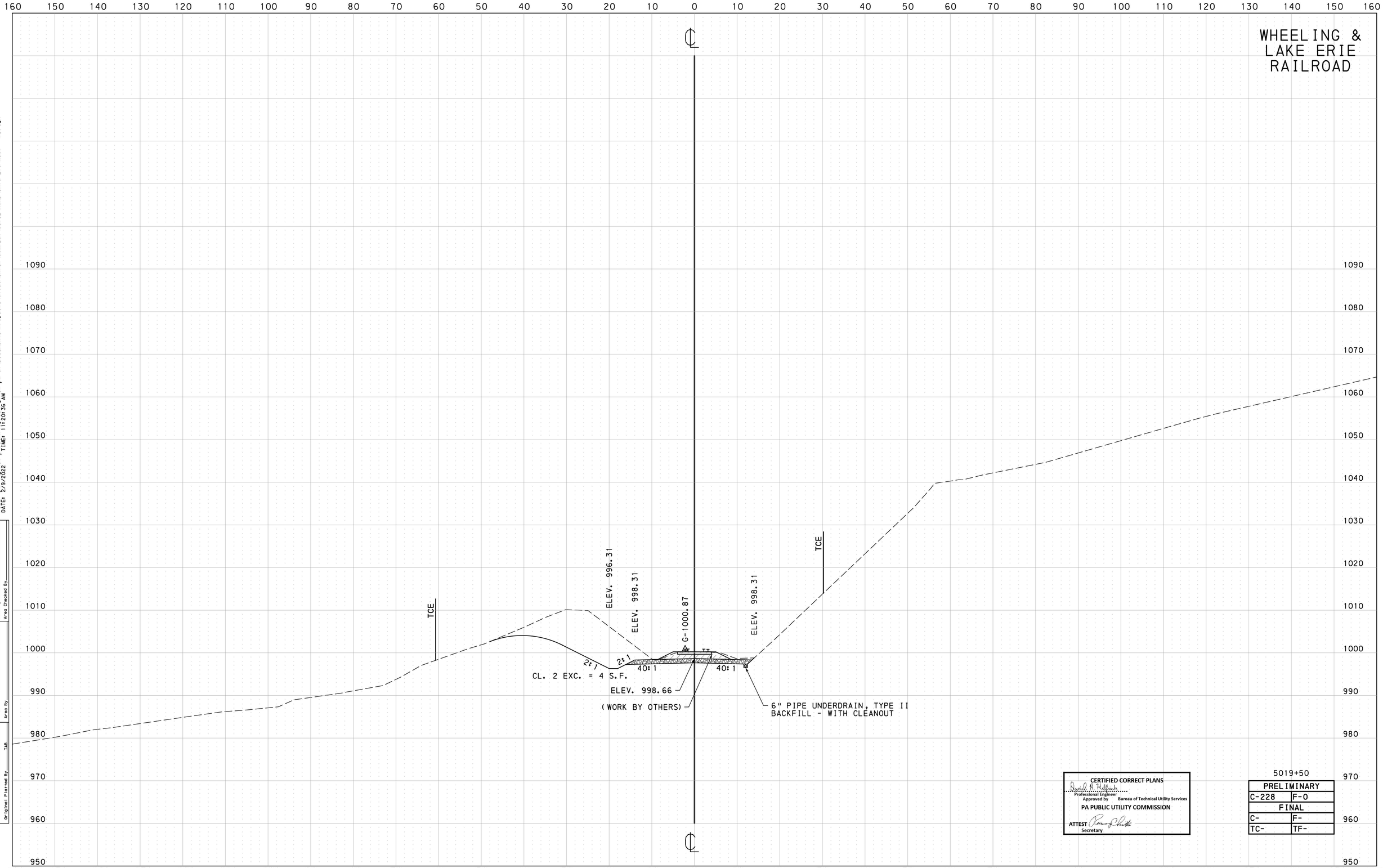

SCALE: 1 INCH = 10 FEET

CERTIFIED CORRECT PLANS
Professional Engineer
Approved by Bureau of Technical Utility Services
PA PUBLIC UTILITY COMMISSION
ATTEST
Secretary

5019+50

PRELIMINARY	
C-228	F-0
FINAL	
C-	F-
TC-	TF-

FILE: pw:\\gfnet-pw.bentley.com:gfnet-pw-01\Documents\Projects\61636\INPUT\COMP_01\CIVIL\ROAD\SR70-E10 XS01 - FD.dgn
DATE: 2/9/2022 TIME: 11:20:36 AM

Finals Plotted By
Finals Checked By
Area By
Area Checked By
Original Checked By
Template By
Area By
Application No.
Route No.
Original Plotted By TAB

PENNSYLVANIA DEPARTMENT OF TRANSPORTATION
CROSS SECTIONS

Dist.	County	Route	Sect.	Prelim. Bk. No.	Final Bk. No.	Sheet No.
12-0	WESTMORELAND	0070	E10			244 OF 287

WHEELING & LAKE ERIE RAILROAD

TCE

ELEV. 996.06

ELEV. 998.06

G-1000.61

ELEV. 998.07

TCE

2:1

2:1

40:1

40:1

CL. 2 EXC. = 4 S.F.

ELEV. 998.41

(WORK BY OTHERS)

6" PIPE UNDERDRAIN, TYPE II
BACKFILL - WITH CLEANOUT

CERTIFIED CORRECT PLANS
Professional Engineer
Approved by Bureau of Technical Utility Services
PA PUBLIC UTILITY COMMISSION
ATTEST Secretary

5020+00

PRELIMINARY	
C-273	F-0
FINAL	
C-	F-
TC-	TF-

SCALE: 1 INCH = 10 FEET

FILE: pw:\\grfnet-pw.dantley.comgfnet-pw-01\Documents\Projects\61636\INPUT\COMP_01\C1V1L\ROAD\SR70-E10 XS01 - F0.dgn
DATE: 2/9/2022 TIME: 11:20:53 AM

Application No.	
Route No.	
Original Plotted By	IAB
Original Checked By	
Template By	
Area By	
Finals Plotted By	
Finals Checked By	
Area By	
Area Checked By	

PENNSYLVANIA DEPARTMENT OF TRANSPORTATION
CROSS SECTIONS

Dist.	County	Route	Sect.	Prelim. Bk. No.	Final Bk. No.	Sheet No.
12-0	WESTMORELAND	0070	E10			245 OF 287

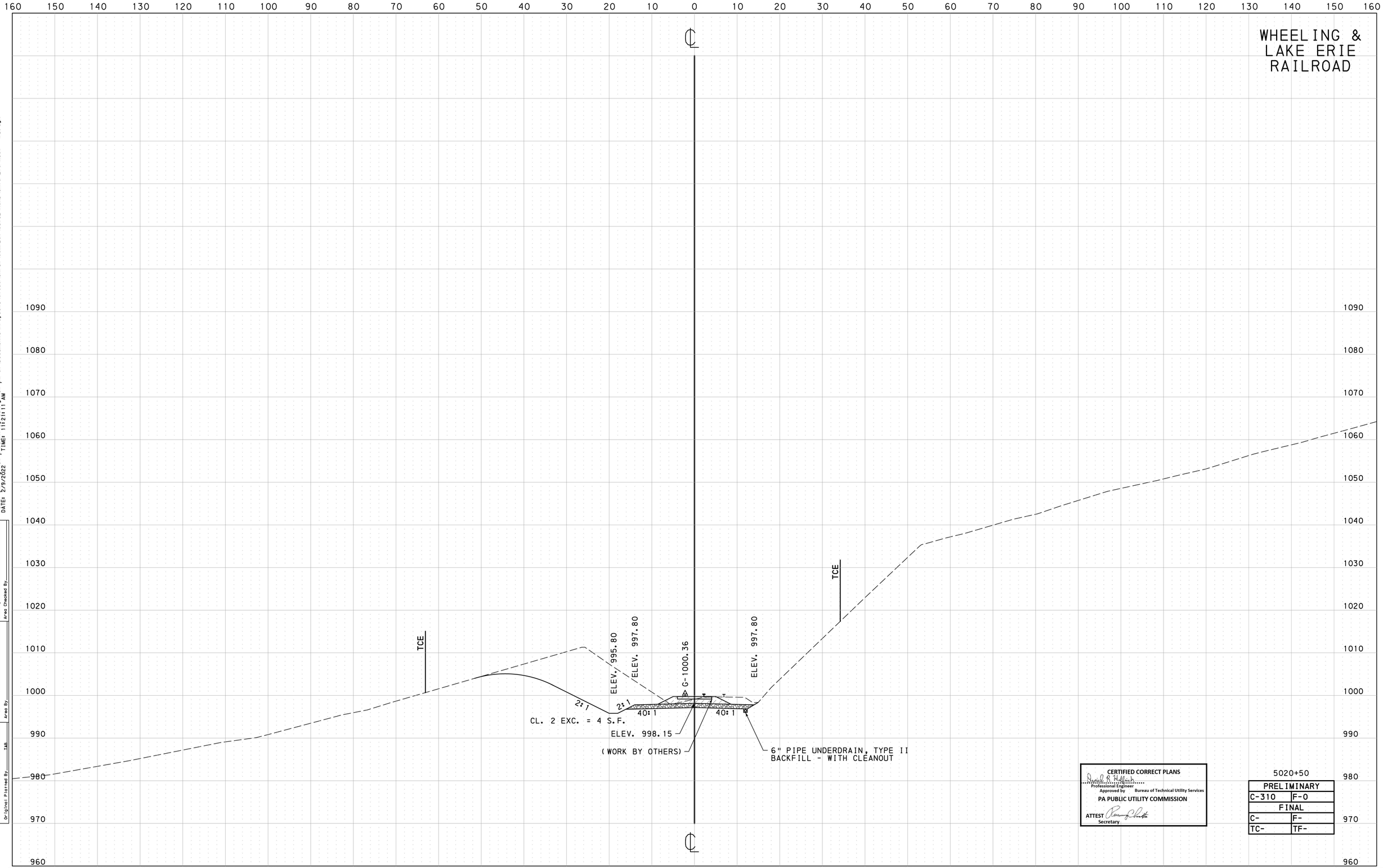

CERTIFIED CORRECT PLANS
Professional Engineer
Approved by Bureau of Technical Utility Services
PA PUBLIC UTILITY COMMISSION
ATTEST
Secretary

5020+50

PRELIMINARY	
C-310	F-0
FINAL	
C-	F-
TC-	TF-

SCALE: 1 INCH = 10 FEET

FILE: pw:\\gfnet-pw.bentley.com:gfnet-pw-01\Documents\Projects\61636\INPUT\COMP_01\CIVIL\ROAD\SR70-E10 XS01 - FD.dgn
DATE: 2/9/2022 TIME: 11:21:11 AM

Application No.
Route No.
Original Plotted By TAB
Original Checked By
Template By
Area By
Finals Plotted By
Finals Checked By
Area By
Area Checked By

PENNSYLVANIA DEPARTMENT OF TRANSPORTATION
CROSS SECTIONS

Dist.	County	Route	Sect.	Prelim. Bk. No.	Final Bk. No.	Sheet No.
12-0	WESTMORELAND	0070	E10			246 OF 287

WHEELING & LAKE ERIE RAILROAD

TCE
ELEV. 995.55
ELEV. 997.55
G-1000.11
ELEV. 997.55
TCE
2:1
2:1
40:1
40:1
CL. 2 EXC. = 4 S.F.
ELEV. 997.90
(WORK BY OTHERS)
6" PIPE UNDERDRAIN, TYPE II
BACKFILL - WITH CLEANOUT

5021+00

SCALE: 1 INCH = 10 FEET

FILE: pw:\\dfnet-pw.bentley.com:dfnet-pw-01\Documents\Projects\61636\INPUT\COMP_01\C1V1L\ROAD\SR70-E10 XS01 - F0.dgn
DATE: 2/9/2022 TIME: 11:21:28 AM

Finals Plotted By
Finals Checked By
Original Checked By
Template By
Area By
Area Checked By
Application No.
Route No.
Original Plotted By TAB

CERTIFIED CORRECT PLANS
Professional Engineer
Approved by Bureau of Technical Utility Services
PA PUBLIC UTILITY COMMISSION
ATTEST Secretary

PRELIMINARY	
C-341	F-0
FINAL	
C-	F-
TC-	TF-

PENNSYLVANIA DEPARTMENT OF TRANSPORTATION
CROSS SECTIONS

Dist.	County	Route	Sect.	Prelim. Bk. No.	Final Bk. No.	Sheet No.
12-0	WESTMORELAND	0070	E10			247 OF 287

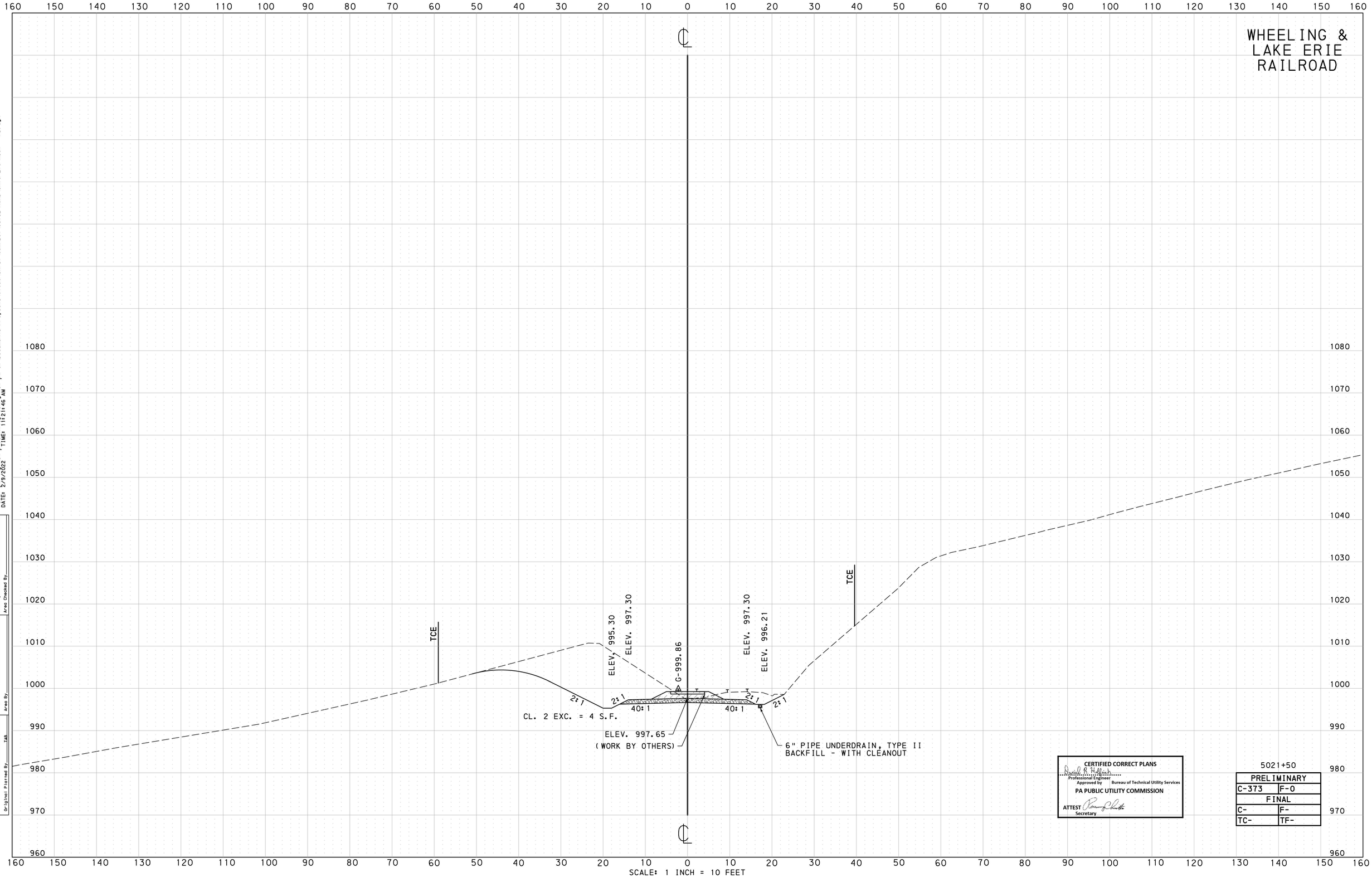

CERTIFIED CORRECT PLANS
Professional Engineer
Approved by Bureau of Technical Utility Services
PA PUBLIC UTILITY COMMISSION
ATTEST
Secretary

5021+50

PRELIMINARY	
C-373	F-0
FINAL	
C-	F-
TC-	TF-

SCALE: 1 INCH = 10 FEET

FILE: pw:\\gfnet-pw.bentley.com:gfnet-pw-01\Documents\Projects\61636\INPUT\COMP_01\CIVIL\ROAD\SR70-E10 XS01 - FD.dgn
DATE: 2/9/2022 TIME: 11:21:46 AM

Application No.
Route No.
Original Plotted By
Original Checked By
Template By
Area By
Finals Plotted By
Finals Checked By
Area By
Area Checked By

PENNSYLVANIA DEPARTMENT OF TRANSPORTATION
CROSS SECTIONS

Dist.	County	Route	Sect.	Prelim. Bk. No.	Final Bk. No.	Sheet No.
12-0	WESTMORELAND	0070	E10			248 OF 287

WHEELING & LAKE ERIE RAILROAD

FILE: pw:\\gfnet-pw.bentley.com:gfnet-pw-01\Documents\Projects\61636\INPUT\COMP_01\C1V1L\ROAD\SR70-E10 XS01 - FD.dgn
DATE: 2/9/2022 TIME: 11:22:03 AM

Finals Plotted By
Finals Checked By
Area By
Area Checked By
Original Checked By
Template By
Area By
Application No.
Route No.
Original Plotted By TAB

TCE
ELEV. 995.12
ELEV. 997.12
G-999.67
ELEV. 997.12
ELEV. 995.12
TCE
2:1
2:1
40:1
40:1
2:1
2:1
CL. 2 EXC. = 4 S.F.
CL. 2 EXC. = 4 S.F.
ELEV. 997.47
(WORK BY OTHERS)
END 6" PIPE UNDERDRAIN, TYPE II BACKFILL - WITH CLEANOUT

CERTIFIED CORRECT PLANS
Professional Engineer
Approved by Bureau of Technical Utility Services
PA PUBLIC UTILITY COMMISSION
ATTEST Secretary

5022+00

PRELIMINARY	
C-366	F-0
FINAL	
C-	F-
TC-	TF-

SCALE: 1 INCH = 10 FEET

PENNSYLVANIA DEPARTMENT OF TRANSPORTATION
CROSS SECTIONS

Dist.	County	Route	Sect.	Prelim. Bk. No.	Final Bk. No.	Sheet No.
12-0	WESTMORELAND	0070	E10			249 OF 287

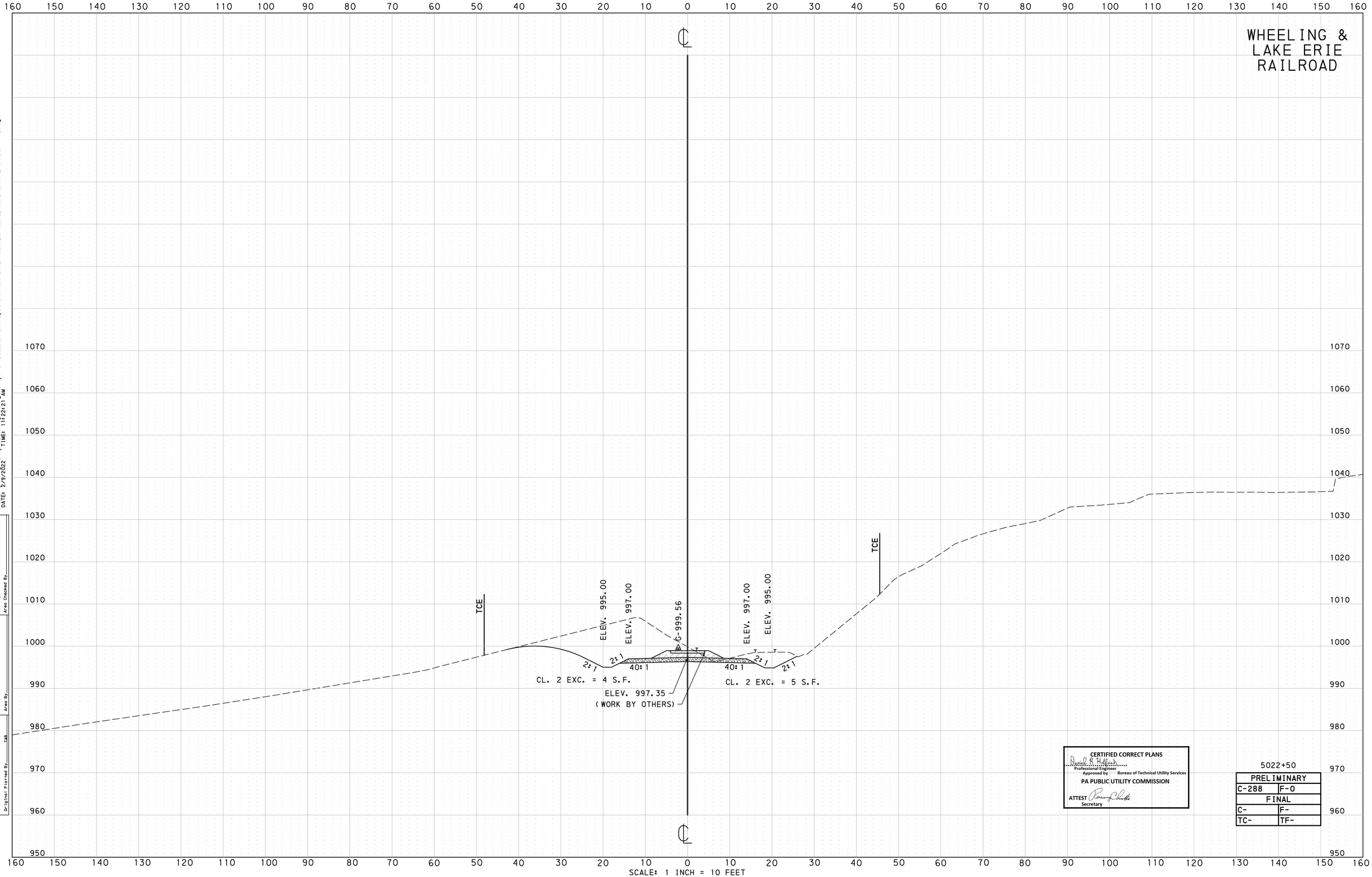

SCALE: 1 INCH = 10 FEET

FILE: pw:\\gfnet-pw.bentley.com:gfnet-pw-01\Documents\Projects\61636\INPUT\COMP_01\CIVIL\ROAD\SR70-E10 XS01 - FD.dgn
DATE: 2/9/2022 TIME: 11:22:21 AM

Finals Plotted By
Finals Checked By
Area By
Area Checked By
Original Checked By
Template By
Area By
Application No.
Route No.
Original Plotted By TAB

CERTIFIED CORRECT PLANS
Daniel R. Hellrich
Professional Engineer
Approved by Bureau of Technical Utility Services
PA PUBLIC UTILITY COMMISSION
ATTEST Rosemary Chiavetta
Secretary

5022+50

PRELIMINARY	
C-288	F-0
FINAL	
C-	F-
TC-	TF-

PENNSYLVANIA DEPARTMENT OF TRANSPORTATION
CROSS SECTIONS

Dist.	County	Route	Sect.	Prelim. Bk. No.	Final Bk. No.	Sheet No.
12-0	WESTMORELAND	0070	E10			250 OF 287

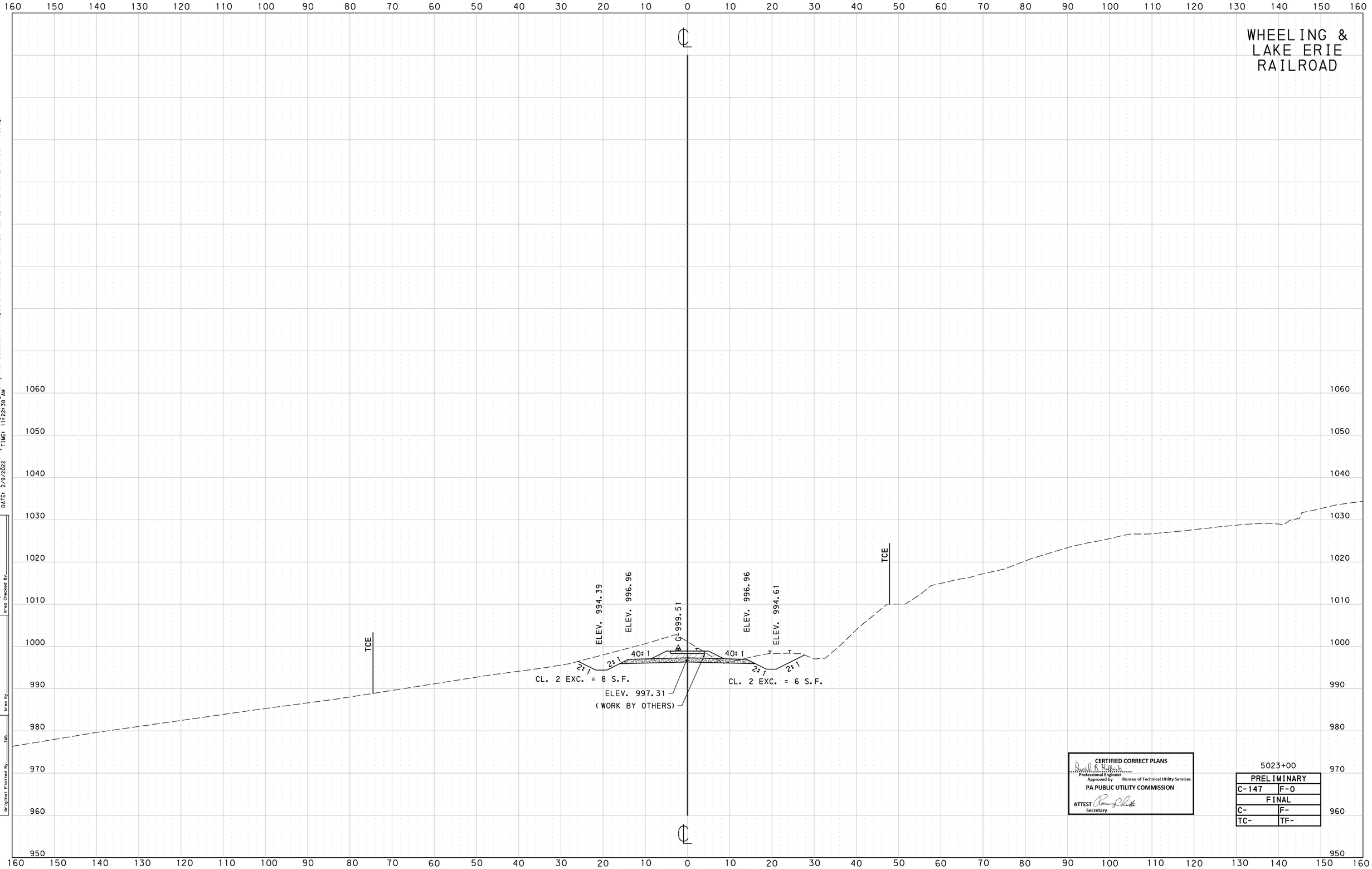

SCALE: 1 INCH = 10 FEET

CERTIFIED CORRECT PLANS
Professional Engineer
Approved by Bureau of Technical Utility Services
PA PUBLIC UTILITY COMMISSION
ATTEST
Secretary

5023+00

PRELIMINARY	
C-147	F-0
FINAL	
C-	F-
TC-	TF-

FILE: pw:\\gfnet-pw.bentley.com:gfnet-pw-01\Documents\Projects\61636\INPUT\COMP_01\CIVIL\ROAD\SR70-E10 XS01 - FD.dgn
DATE: 2/9/2022 TIME: 11:22:38 AM

Application No.
Route No.
Original Plotted By TAB
Original Checked By
Template By
Area By
Finals Plotted By
Finals Checked By
Area By
Area Checked By

PENNSYLVANIA DEPARTMENT OF TRANSPORTATION
CROSS SECTIONS

Dist.	County	Route	Sect.	Prelim. Bk. No.	Final Bk. No.	Sheet No.
12-0	WESTMORELAND	0070	E10			251 OF 287

WHEELING & LAKE ERIE RAILROAD

ELEV. 989.45
ELEV. 988.48
ELEV. 996.96
℄ G-999.51
ELEV. 996.96
ELEV. 994.10
TCE
TCE
40:1
40:1
2:1
2:1
2:1
2:1
2:1
2:1
CL. 2 EXC. = 6 S.F.
CL. 2 EXC. = 7 S.F.
ELEV. 997.31
(WORK BY OTHERS)

5024+00

PRELIMINARY	
C-22	F-72
FINAL	
C-	F-
TC-	TF-

ELEV. 992.73
ELEV. 991.83
ELEV. 996.96
℄ G-999.51
ELEV. 996.96
ELEV. 994.36
TCE
TCE
40:1
40:1
2:1
2:1
2:1
2:1
2:1
2:1
CL. 2 EXC. = 8 S.F.
ELEV. 997.31
(WORK BY OTHERS)

CERTIFIED CORRECT PLANS
Professional Engineer
Approved by Bureau of Technical Utility Services
PA PUBLIC UTILITY COMMISSION
ATTEST Secretary

5023+50

PRELIMINARY	
C-43	F-36
FINAL	
C-	F-
TC-	TF-

SCALE: 1 INCH = 10 FEET

FILE: pw:\\gfnet-pw.bentley.com:gfnet-pw-01\Documents\Projects\61636\INPUT\COMP_01\C1V1L\ROAD\SR70-E10 XS01 - FD.dgn
DATE: 2/9/2022 TIME: 11:22:56 AM

Finals Plotted By
Finals Checked By
Area By
Area Checked By
Original Checked By
Template By
Area By
Application No.
Route No. TAB
Original Plotted By

PENNSYLVANIA DEPARTMENT OF TRANSPORTATION
CROSS SECTIONS

Dist.	County	Route	Sect.	Prelim. Bk. No.	Final Bk. No.	Sheet No.
12-0	WESTMORELAND	0070	E10			252 OF 287

WHEELING & LAKE ERIE RAILROAD

ELEV. 1013.00
2:1
2:1
ELEV. 991.29
2:1
2:1
40:1
G-999.51
40:1
ELEV. 996.96
ELEV. 993.60
2:1
2:1
TCE
TCE
LEGAL R/W
FOR TWP. RD.
ELEV. 997.31
(WORK BY OTHERS)
CL. 2 EXC. = 14 S.F.

5025+00

PRELIMINARY	
C-32	F-1393
FINAL	
C-	F-
TC-	TF-

ELEV. 990.55
ELEV. 996.96
2:1
2:1
40:1
G-999.51
40:1
ELEV. 996.96
ELEV. 993.85
2:1
2:1
TCE
TCE
CL. 2 EXC. = 8 S.F.
ELEV. 997.31
(WORK BY OTHERS)
CL. 2 EXC. = 13 S.F.

CERTIFIED CORRECT PLANS
Daniel B. Hoffman
Professional Engineer
Approved by Bureau of Technical Utility Services
PA PUBLIC UTILITY COMMISSION
ATTEST Rosemary Chiavetta
Secretary

5024+50

PRELIMINARY	
C-79	F-588
FINAL	
C-	F-
TC-	TF-

SCALE: 1 INCH = 10 FEET

FILE: pw:\\dfnet-pw.bentley.com:dfnet-pw-01\Documents\Projects\61636\INPUT\COMP_01\C1V1L\ROAD\SR70-E10 XS01 - FD.dgn
DATE: 2/9/2022 TIME: 11:23:14 AM

Finals Plotted By
Finals Checked By
Area By
Area Checked By
Original Checked By
Template By
Area By
Application No.
Route No.
Original Plotted By TAB

PENNSYLVANIA DEPARTMENT OF TRANSPORTATION
CROSS SECTIONS

Dist.	County	Route	Sect.	Prelim. Bk. No.	Final Bk. No.	Sheet No.
12-0	WESTMORELAND	0070	E10			253 OF 287

WHEELING & LAKE ERIE RAILROAD

5026+00

PRELIMINARY	
C-0	F-452
FINAL	
C-	F-
TC-	TF-

5025+50

PRELIMINARY	
C-0	F-994
FINAL	
C-	F-
TC-	TF-

CERTIFIED CORRECT PLANS
Daniel R. Hallinan
Professional Engineer
Approved by Bureau of Technical Utility Services
PA PUBLIC UTILITY COMMISSION
ATTEST
Secretary

SCALE: 1 INCH = 10 FEET

FILE: pw:\\dfnet-pw.bentley.com:dfnet-pw-01\Documents\Projects\61636\INPUT\COMP_01\C1V1L\ROAD\SR70-E10 XS01 - FD.dgn
DATE: 2/9/2022 TIME: 11:23:32 AM

Finals Plotted By	
Finals Checked By	
Area By	
Area Checked By	
Original Checked By	
Template By	
Area By	
Application No.	
Route No.	
Original Plotted By	TAB

PENNSYLVANIA DEPARTMENT OF TRANSPORTATION
CROSS SECTIONS

Dist.	County	Route	Sect.	Prelim. Bk. No.	Final Bk. No.	Sheet No.
12-0	WESTMORELAND	0070	E10			254 OF 287

WHEELING & LAKE ERIE RAILROAD

TYPE 2 WIDENED EMBANKMENT, LT.
STA. 5027+00.00
CLASS 1 EXC. = 229 S.F.
ROCK, 206 SANDSTONE = 60 S.F.
EMBANKMENT = 169 S.F.

ELEV. 992.00
ELEV. 993.00
ELEV. 996.96
G-999.51
ELEV. 996.96
ELEV. 992.58
ELEV. 997.31
(WORK BY OTHERS)
2:1
40:1
CL. 2 EXC. = 9 S.F.
TCE
LEGAL R/W FOR TWP. RD.

5027+00

PRELIMINARY	
C-0	F-999
FINAL	
C-	F-
TC-	TF-

BEGIN TYPE 2 WIDENED EMBANKMENT, LT.
STA. 5026+75.00
CLASS 1 EXC. = 229 S.F.
ROCK, 206 SANDSTONE = 60 S.F.
EMBANKMENT = 169 S.F.

ELEV. 994.00
ELEV. 996.96
G-999.51
ELEV. 996.96
ELEV. 992.83
ELEV. 997.31
(WORK BY OTHERS)
2:1
40:1
CL. 2 EXC. = 13 S.F.
TCE
LEGAL R/W FOR TWP. RD.

CERTIFIED CORRECT PLANS
Professional Engineer
Approved by Bureau of Technical Utility Services
PA PUBLIC UTILITY COMMISSION
ATTEST Secretary

5026+50

PRELIMINARY	
C-0	F-549
FINAL	
C-	F-
TC-	TF-

SCALE: 1 INCH = 10 FEET

FILE: pw:\\dfnet-pw.bentley.com:dfnet-pw-01\Documents\Projects\61636\INPUT\COMP_01\C1V1L\ROAD\SR70-E10 XS01 - FD.dgn
DATE: 2/9/2022 TIME: 11:23:50 AM

Finals Plotted By
Finals Checked By
Area By
Area Checked By
Original Checked By
Template By
Area By
Application No.
Route No.
Original Plotted By
TAB

PENNSYLVANIA DEPARTMENT OF TRANSPORTATION
CROSS SECTIONS

Dist.	County	Route	Sect.	Prelim. Bk. No.	Final Bk. No.	Sheet No.
12-0	WESTMORELAND	0070	E10			255 OF 287

WHEELING & LAKE ERIE RAILROAD

ELEV. 996.96
G-999.51
ELEV. 996.96
40:1
40:1
2:1
2:1
ELEV. 997.31
(WORK BY OTHERS)
TCE
2.04%
NEW HEADWALL
NEW HEADWALL
LEGAL R/W FOR TWP. RD.
LEGAL R/W FOR TWP. RD.
ALTERNATING 1'-0" WIDE X 8" HIGH BAFFLES (TYP.) 10'-0" MAX SPA.
PROPOSED 69'-0" EXTENSION OF EXISTING 10' X 10' BOX CULVERT OVER CEDAR CREEK
EXISTING 10' X 10' BOX CULVERT OVER CEDAR CREEK (TO REMAIN)
EXISTING ROSTRAVER TOWNSHIP BRIDGE CARRYING RIDGE ROAD OVER CEDAR CREEK (TO REMAIN)
REMOVE APPROX. 45'-1" OF EXISTING 10' X 10' BOX CULVERT OVER CEDAR CREEK
12" SAN IN 24" CASING

TYPE 2 WIDENED EMBANKMENT, LT.
CLASS 1 EXC. = 364 S.F.
ROCK, 206 SANDSTONE = 219 S.F.
EMBANKMENT = 145 S.F.

5028+00

PRELIMINARY	
C-1384	F-1637
FINAL	
C-	F-
TC-	TF-

ELEV. 991.33
ELEV. 996.96
G-999.51
ELEV. 996.96
40:1
40:1
2:1
2:1
2:1
ELEV. 997.31
(WORK BY OTHERS)
TCE
LEGAL R/W FOR TWP. RD.
LEGAL R/W FOR TWP. RD.

TYPE 2 WIDENED EMBANKMENT, LT.
STA. 5027+50.00
CLASS 1 EXC. = 260 S.F.
ROCK, 206 SANDSTONE = 152 S.F.
EMBANKMENT = 108 S.F.

CERTIFIED CORRECT PLANS
Daniel B. Hilferty
Professional Engineer
Approved by Bureau of Technical Utility Services
PA PUBLIC UTILITY COMMISSION
ATTEST
Secretary

5027+50

PRELIMINARY	
C-326	F-2070
FINAL	
C-	F-
TC-	TF-

SCALE: 1 INCH = 10 FEET

FILE: pw:\\gfnet-pw.bentley.com:gfnet-pw-01\Documents\Projects\61636\INPUT\COMP_01\CIVIL\ROAD\SR70-E10 XS01 - FD.dgn
DATE: 2/9/2022 TIME: 11:24:08 AM

Finals Plotted By	
Finals Checked By	
Area By	
Area Checked By	
Original Checked By	
Template By	
Area By	
Application No.	
Route No.	
Original Plotted By	TAB

PENNSYLVANIA DEPARTMENT OF TRANSPORTATION
CROSS SECTIONS

Dist.	County	Route	Sect.	Prelim. Bk. No.	Final Bk. No.	Sheet No.
12-0	WESTMORELAND	0070	E10			256 OF 287

WHEELING & LAKE ERIE RAILROAD

5029+00

ELEV. 996.90
G-999.46
ELEV. 996.90
ELEV. 990.01
40:1
40:1
2:1
2:1
2:1
ELEV. 997.25
(WORK BY OTHERS)
CL. 2 EXC. = 5 S.F.
TCE
LEGAL DRAINAGE EASEMENT
LEGAL DRAINAGE EASEMENT
ELEV. 964.25
2:1
CL. 2 EXC. = 24 S.F.
8" SAN
LEGAL R/W FOR TWP. RD.
LEGAL R/W FOR TWP. RD.

TYPE 2 WIDENED EMBANKMENT, LT.
CLASS 1 EXC. = 328 S.F.
ROCK, 206 SANDSTONE = 197 S.F.
EMBANKMENT = 133 S.F.

PRELIMINARY	
C-16	F-1696
FINAL	
C-	F-
TC-	TF-

5028+50

ELEV. 996.95
G-999.51
ELEV. 996.95
40:1
40:1
2:1
2:1
ELEV. 997.31
(WORK BY OTHERS)
CL. 2 EXC. = 5 S.F.
TCE
LEGAL DRAINAGE EASEMENT
LEGAL DRAINAGE EASEMENT
ELEV. 963.08
2:1
CL. 2 EXC. = 17 S.F.
8" SAN
15" TCP
LEGAL R/W FOR TWP. RD.
LEGAL R/W FOR TWP. RD.

TYPE 2 WIDENED EMBANKMENT, LT.
CLASS 1 EXC. = 280 S.F.
ROCK, 206 SANDSTONE = 193 S.F.
EMBANKMENT = 94 S.F.

CERTIFIED CORRECT PLANS
Professional Engineer
Approved by Bureau of Technical Utility Services
PA PUBLIC UTILITY COMMISSION
ATTEST Secretary

PRELIMINARY	
C-938	F-1714
FINAL	
C-	F-
TC-	TF-

SCALE: 1 INCH = 10 FEET

FILE: pw:\\gfnet-pw.bentley.com:gfnet-pw-01\Documents\Projects\61636\INPUT\COMP_01\C1V1LA\ROAD\SR70-E10 XS01 - FD.dgn
DATE: 2/9/2022 TIME: 11:24:25 AM

Finals Plotted By	Finals Checked By	Area By	Area Checked By
Original Checked By	Template By	Area By	
Application No.			
Route No.			
Original Plotted By	TAR		

Dist.	County	Route	Sect.	Prelim. Bk. No.	Final Bk. No.	Sheet No.
12-0	WESTMORELAND	0070	E10			257 OF 287

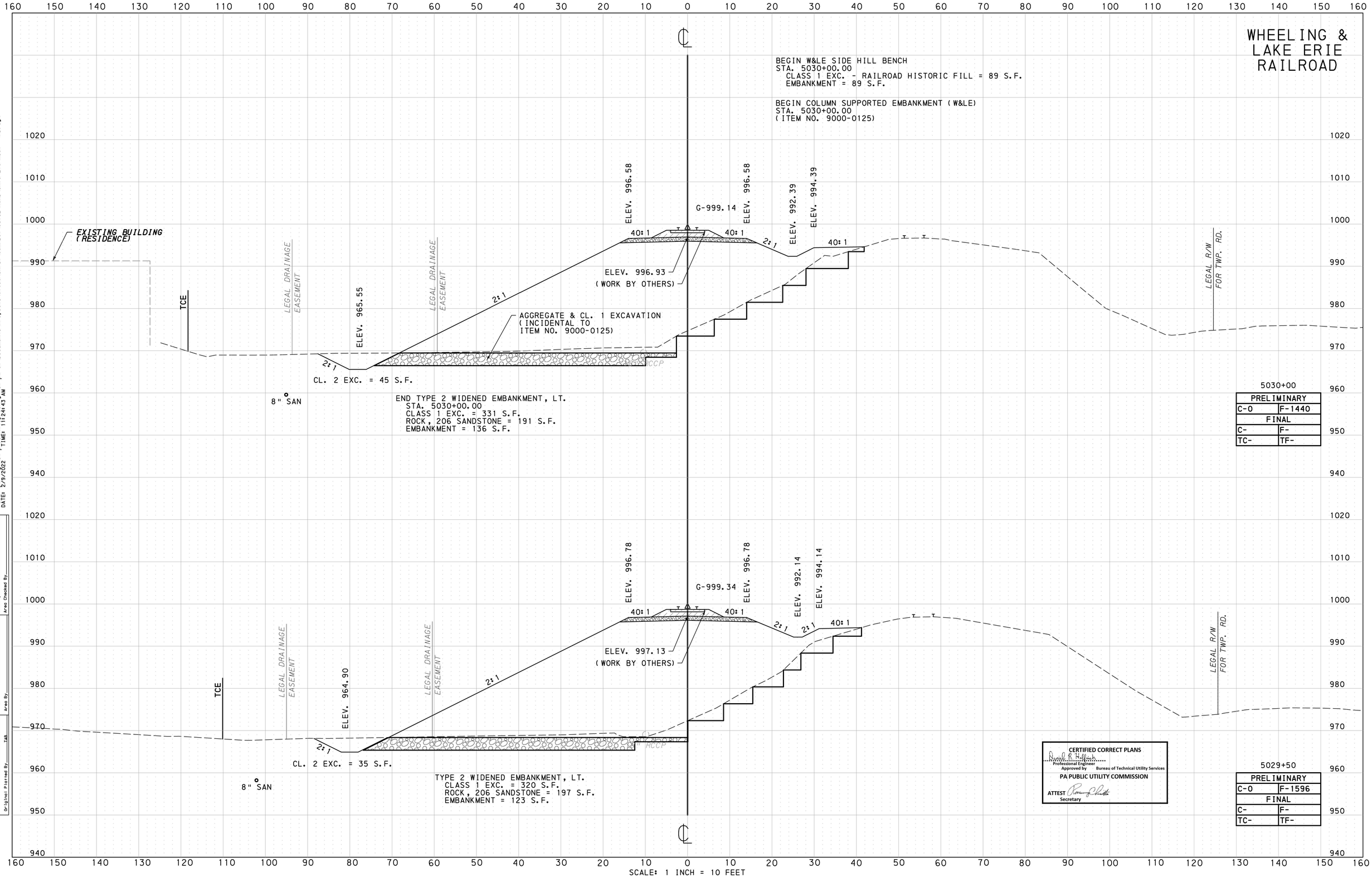

FILE: pw:\\gfnet-pw.bentley.com:gfnet-pw-01\Documents\Projects\61636\INPUT\COMP_01\CIVIL\ROAD\SR70-E10 XS01 - FD.dgn
DATE: 2/9/2022 TIME: 11:24:43 AM

Finals Plotted By
Finals Checked By
Area By
Area Checked By
Original Checked By
Template By
Area By
Application No.
Route No.
Original Plotted By TAB

PENNSYLVANIA DEPARTMENT OF TRANSPORTATION
CROSS SECTIONS

Dist.	County	Route	Sect.	Prelim. Bk. No.	Final Bk. No.	Sheet No.
12-0	WESTMORELAND	0070	E10			258 OF 287

WHEELING & LAKE ERIE RAILROAD

5031+00

PRELIMINARY	
C-0	F-1151
FINAL	
C-	F-
TC-	TF-

ELEV. 995.97
ELEV. 995.97
ELEV. 992.89
ELEV. 994.89
G-998.53
40:1
40:1
2:1
2:1
40:1
ELEV. 996.32
(WORK BY OTHERS)
2:1
TCE
LEGAL DRAINAGE EASEMENT
LEGAL DRAINAGE EASEMENT
AGGREGATE & CL. 1 EXCAVATION
(INCIDENTAL TO
ITEM NO. 9000-0125)
ROCK, CLASS R-7
24" TCP
8" SAN
51-A30
END SECTION FOR 36" OR 42" PIPE
STA. 783+89.00 65.50' LT
S.R. 0051
INV. 967.15 IN (FROM 51-A29)

W&LE SIDE HILL BENCH
CLASS 1 EXC. - RAILROAD HISTORIC FILL = 69 S.F.
EMBANKMENT = 69 S.F.

8" SAN

ELEV. 996.32
ELEV. 996.32
ELEV. 994.64
G-998.87
40:1
40:1
2:1
2:1
40:1
ELEV. 996.67
(WORK BY OTHERS)
2:1
TCE
LEGAL DRAINAGE EASEMENT
LEGAL DRAINAGE EASEMENT
ELEV. 966.20
AGGREGATE & CL. 1 EXCAVATION
(INCIDENTAL TO
ITEM NO. 9000-0125)
18" RCCP
2:1
CL. 2 EXC. = 64 S.F.
8" SAN

W&LE SIDE HILL BENCH
CLASS 1 EXC. - RAILROAD HISTORIC FILL = 90 S.F.
EMBANKMENT = 90 S.F.

LEGAL R/W
FOR TWP. RD.

CERTIFIED CORRECT PLANS
Donald R. Hilbert
Professional Engineer
Approved by Bureau of Technical Utility Services
PA PUBLIC UTILITY COMMISSION
ATTEST Rosemary J. Chiavetta
Secretary

5030+50

PRELIMINARY	
C-0	F-1256
FINAL	
C-	F-
TC-	TF-

SCALE: 1 INCH = 10 FEET

FILE: pw:\\dfnet-pw.bentley.com:dfnet-pw-01\Documents\Projects\61636\INPUT\COMP_01\C1V1L\ROAD\SR70-E10 XS01 - FD.dgn
DATE: 2/9/2022
TIME: 11:25:00 AM

Finals Plotted By
Finals Checked By
Area By
Area Checked By
Original Checked By
Template By
Area By
Application No.
Route No.
Original Plotted By TAB

PENNSYLVANIA DEPARTMENT OF TRANSPORTATION
CROSS SECTIONS

Dist.	County	Route	Sect.	Prelim. Bk. No.	Final Bk. No.	Sheet No.
12-0	WESTMORELAND	0070	E10			259 OF 287

WHEELING & LAKE ERIE RAILROAD

BEGIN COLUMN SUPPORTED EMBANKMENT (W&LE)
STA. 5032+40.00
(ITEM NO. 9000-0125)

G-997.67

EXISTING TOP OF TRACK

EXISTING WHEELING & LAKE ERIE BRIDGE OVER S.R. 0051
STEEL RIVETED I-BEAMS (1 SPAN)

24" RCCP

15" RCP

15" RCP

15" RCCP

8" SAN

36" PIPE

24" OR 30" PIPE

24" PIPE

8" SAN IN 16" STEEL CASING

5032+00

PRELIMINARY	
C-0	F-0
FINAL	
C-	F-
TC-	TF-

END W&LE SIDE HILL BENCH
STA. 5031+80.00
CLASS 1 EXC. - RAILROAD HISTORIC FILL = 0 S.F.
EMBANKMENT = 0 S.F.

END COLUMN SUPPORTED EMBANKMENT (W&LE)
STA. 5031+80.00
(ITEM NO. 9000-0125)

ELEV. 995.56

ELEV. 995.56

ELEV. 993.14

G-998.12

40:1

40:1

2:1

2:1

2:1

ELEV. 995.91

(WORK BY OTHERS)

LEGAL R/W

15" CPP

24" RCCP

8" SAN

36" OR 42" PIPE

W&LE SIDE HILL BENCH
CLASS 1 EXC. - RAILROAD HISTORIC FILL = 47 S.F.
EMBANKMENT = 47 S.F.

8" SAN

5031+50

PRELIMINARY	
C-140	F-0
FINAL	
C-	F-
TC-	TF-

CERTIFIED CORRECT PLANS
Professional Engineer
Approved by Bureau of Technical Utility Services
PA PUBLIC UTILITY COMMISSION
ATTEST Secretary

SCALE: 1 INCH = 10 FEET

FILE: pw:\\gfnet-pw.bentley.com:gfnet-pw-01\Documents\Projects\61636\INPUT\COMP_01\C1V1L\ROAD\SR70-E10 XS01 - FD.dgn
DATE: 2/9/2022 TIME: 11:25:18 AM

Finals Plotted By
Finals Checked By
Area By
Area Checked By
Original Checked By
Template By
Area By
Application No.
Route No.
Original Plotted By
TAB

Dist.	County	Route	Sect.	Prelim. Bk. No.	Final Bk. No.	Sheet No.
12-0	WESTMORELAND	0070	E10			260 OF 287

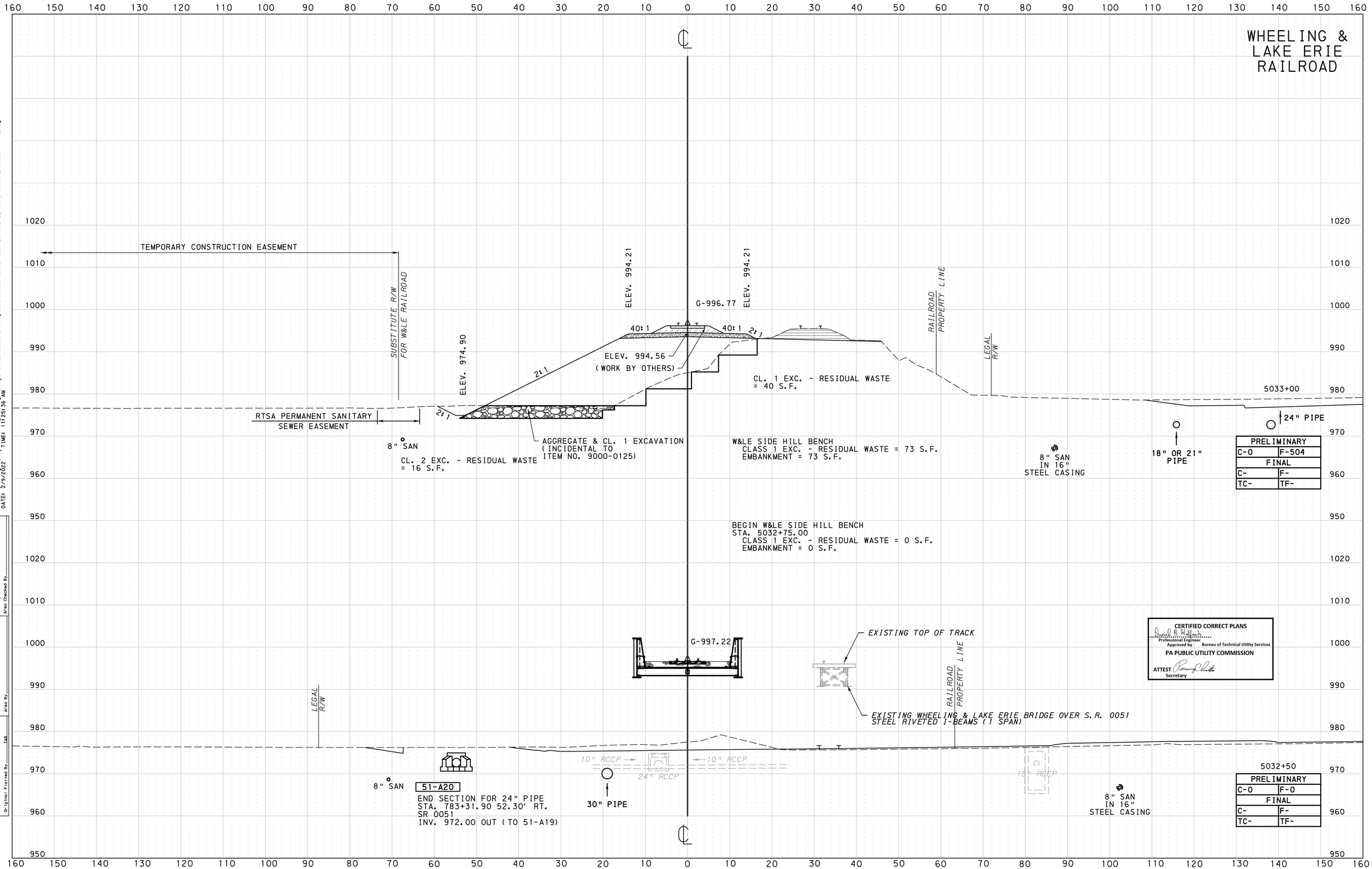

FILE: pw:\\gfnet-pw.bentley.com:gfnet-pw-01\Documents\Projects\61636\INPUT\COMP_01\CIVIL\ROAD\SR70-E10 XS01 - FD.dgn
DATE: 2/9/2022 TIME: 11:25:36 AM

Finals Plotted By
Finals Checked By
Area By
Area Checked By
Original Checked By
Template By
Area By
Application No.
Route No.
Original Plotted By TAB

PENNSYLVANIA DEPARTMENT OF TRANSPORTATION
CROSS SECTIONS

Dist.	County	Route	Sect.	Prelim. Bk. No.	Final Bk. No.	Sheet No.
12-0	WESTMORELAND	0070	E10			261 OF 287

WHEELING & LAKE ERIE RAILROAD

TEMPORARY CONSTRUCTION EASEMENT

SUBSTITUTE R/W FOR W&LE RAILROAD

RTSA PERMANENT SANITARY SEWER EASEMENT

8" SAN

CL. 2 EXC. - RESIDUAL WASTE = 9 S.F.

AGGREGATE & CL. 1 EXCAVATION (INCIDENTAL TO ITEM NO. 9000-0125)

ELEV. 976.20

ELEV. 993.66

G-995.87

ELEV. 993.66

40:1

40:1

2:1

2:1

(WORK BY OTHERS)

ELEV. 993.66

CL. 1 EXC. - RESIDUAL WASTE = 41 S.F.

W&LE SIDE HILL BENCH
CLASS 1 EXC. - RESIDUAL WASTE = 67 S.F.
EMBANKMENT = 67 S.F.

RAILROAD PROPERTY LINE

TCE

BLDG

BLDG

5034+00

PRELIMINARY	
C-0	F-302
FINAL	
C-	F-
TC-	TF-

TEMPORARY CONSTRUCTION EASEMENT

SUBSTITUTE R/W FOR W&LE RAILROAD

RTSA PERMANENT SANITARY SEWER EASEMENT

8" SAN

CL. 2 EXC. - RESIDUAL WASTE = 15 S.F.

AGGREGATE & CL. 1 EXCAVATION (INCIDENTAL TO ITEM NO. 9000-0125)

ELEV. 975.55

ELEV. 993.76

G-996.32

ELEV. 993.76

40:1

40:1

2:1

2:1

ELEV. 994.11

(WORK BY OTHERS)

CL. 1 EXC. - RESIDUAL WASTE = 40 S.F.

W&LE SIDE HILL BENCH
CLASS 1 EXC. - RESIDUAL WASTE = 85 S.F.
EMBANKMENT = 85 S.F.

RAILROAD PROPERTY LINE

TCE

TCE

BLDG

BLDG

CERTIFIED CORRECT PLANS
Professional Engineer
Approved by Bureau of Technical Utility Services
PA PUBLIC UTILITY COMMISSION
ATTEST
Secretary

5033+50

PRELIMINARY	
C-0	F-372
FINAL	
C-	F-
TC-	TF-

SCALE: 1 INCH = 10 FEET

File: pw:\\dfnet-pw.bentley.com:dfnet-pw-01\Documents\Projects\61636\INPUT\COMP_01\C1V1L\ROAD\SR70-E10 XS01 - FD.dgn
Date: 2/9/2022 Time: 11:25:53 AM

Finals Plotted By
Finals Checked By
Area By
Area Checked By
Original Checked By
Template By
Area By
Application No.
Route No.
Original Plotted By
TAB

PENNSYLVANIA DEPARTMENT OF TRANSPORTATION
CROSS SECTIONS

Dist.	County	Route	Sect.	Prelim. Bk. No.	Final Bk. No.	Sheet No.
12-0	WESTMORELAND	0070	E10			262 OF 287

WHEELING & LAKE ERIE RAILROAD

5035+00

RTSA TEMPORARY CONSTRUCTION EASEMENT

RTSA PERMANENT SANITARY SEWER EASEMENT

SUBSTITUTE R/W FOR W&LE RAILROAD

BLDG

8" SAN

ELEV. 978.11

2:1

AGGREGATE & CL. 1 EXCAVATION (INCIDENTAL TO ITEM NO. 9000-0125)

CL. 2 EXC. - RESIDUAL WASTE = 21 S.F.

G-994.97

ELEV. 992.41

40:1

(WORK BY OTHERS)

ELEV. 992.76

CL. 1 EXC. - RESIDUAL WASTE = 45 S.F.

TCE

RAILROAD PROPERTY LINE

W&LE SIDE HILL BENCH
CLASS 1 EXC. - RESIDUAL WASTE = 56 S.F.
EMBANKMENT = 56 S.F.

PRELIMINARY	
C-0	F-136
FINAL	
C-	F-
TC-	TF-

5034+50

KENNEL

BLDG

RTSA TEMPORARY CONSTRUCTION EASEMENT

RTSA PERMANENT SANITARY SEWER EASEMENT

SUBSTITUTE R/W FOR W&LE RAILROAD

8" SAN

ELEV. 977.11

2:1

AGGREGATE & CL. 1 EXCAVATION (INCIDENTAL TO ITEM NO. 9000-0125)

CL. 2 EXC. - RESIDUAL WASTE = 20 S.F.

G-995.42

ELEV. 992.86

40:1

(WORK BY OTHERS)

ELEV. 993.21

CL. 1 EXC. - RESIDUAL WASTE = 43 S.F.

TCE

RAILROAD PROPERTY LINE

W&LE SIDE HILL BENCH
CLASS 1 EXC. - RESIDUAL WASTE = 67 S.F.
EMBANKMENT = 67 S.F.

PRELIMINARY	
C-0	F-224
FINAL	
C-	F-
TC-	TF-

CERTIFIED CORRECT PLANS
Donald R. Hallbach
Professional Engineer
Approved by Bureau of Technical Utility Services
PA PUBLIC UTILITY COMMISSION
ATTEST
Secretary

SCALE: 1 INCH = 10 FEET

FILE: pw:\\dfnet-pw.bentley.com:dfnet-pw-01\Documents\Projects\61636\INPUT\COMP_01\C1V1L\ROAD\SR70-E10 XS01 - FD.dgn
DATE: 2/9/2022 TIME: 11:26:10 AM

Finals Plotted By
Finals Checked By
Area By
Area Checked By
Original Checked By
Template By
Area By
Application No.
Route No.
Original Plotted By TAB

PENNSYLVANIA DEPARTMENT OF TRANSPORTATION
CROSS SECTIONS

Dist.	County	Route	Sect.	Prelim. Bk. No.	Final Bk. No.	Sheet No.
12-0	WESTMORELAND	0070	E10			263 OF 287

File: pw:\\gfnet-pw.bentley.com:gfnet-pw-01\Documents\Projects\61636\INPUT\COMP_01\C1V1L\ROAD\SR70-E10 XS01 - FD.dgn
Date: 2/9/2022 Time: 11:26:28 AM

Finals Plotted By
Finals Checked By
Area By
Area Checked By
Original Checked By
Template By
Area By
Application No.
Route No. 1AB
Original Plotted By

WHEELING & LAKE ERIE RAILROAD

5036+50

PRELIMINARY	
C-0	F-2
FINAL	
C-	F-
TC-	TF-

SUBSTITUTE R/W FOR W&LE RAILROAD
ELEV. 982.88
ELEV. 991.11
G-993.67
ELEV. 991.11
ELEV. 989.11
RAILROAD PROPERTY LINE
TCE
40:1
2:1
2:1
40:1
2:1
(WORK BY OTHERS)
ELEV. 991.46
CL. 2 EXC. - RESIDUAL WASTE
= 12 S.F.
CL. 1 EXC. - RESIDUAL WASTE
= 98 S.F.

END COLUMN SUPPORTED EMBANKMENT (W&LE)
STA. 5036+00.00
(ITEM NO. 9000-0125)

5036+00

PRELIMINARY	
C-0	F-19
FINAL	
C-	F-
TC-	TF-

RTSA TEMPORARY CONSTRUCTION EASEMENT
BLDG
BLDG
BLDG
SUBSTITUTE R/W FOR W&LE RAILROAD
ELEV. 980.88
ELEV. 991.51
G-994.07
ELEV. 991.51
RAILROAD PROPERTY LINE
TCE
40:1
2:1
2:1
40:1
(WORK BY OTHERS)
ELEV. 991.86
RTSA PERMANENT SANITARY SEWER EASEMENT
8" SAN
AGGREGATE & CL. 1 EXCAVATION (INCIDENTAL TO ITEM NO. 9000-0125)
CL. 1 EXC. - RESIDUAL WASTE
= 71 S.F.
CL. 2 EXC. - RESIDUAL WASTE
= 15 S.F.
END W&LE SIDE HILL BENCH
STA. 5036+00.00
CLASS 1 EXC. - RESIDUAL WASTE = 62 S.F.
EMBANKMENT = 62 S.F.

RAILROAD PROPERTY LINE
SUBSTITUTE R/W FOR W&LE RAILROAD
ELEV. 979.37
ELEV. 991.96
G-994.52
ELEV. 991.96
TCE
40:1
2:1
2:1
40:1
(WORK BY OTHERS)
ELEV. 992.31
RTSA TEMPORARY CONSTRUCTION EASEMENT
RTSA PERMANENT SANITARY SEWER EASEMENT
8" SAN
AGGREGATE & CL. 1 EXCAVATION (INCIDENTAL TO ITEM NO. 9000-0125)
CL. 1 EXC. - RESIDUAL WASTE
= 50 S.F.
W&LE SIDE HILL BENCH
CLASS 1 EXC. - RESIDUAL WASTE = 52 S.F.
EMBANKMENT = 52 S.F.
CL. 2 EXC. - RESIDUAL WASTE
= 13 S.F.

CERTIFIED CORRECT PLANS
Professional Engineer
Approved by Bureau of Technical Utility Services
PA PUBLIC UTILITY COMMISSION
ATTEST Secretary

5035+50

PRELIMINARY	
C-0	F-60
FINAL	
C-	F-
TC-	TF-

SCALE: 1 INCH = 10 FEET

PENNSYLVANIA DEPARTMENT OF TRANSPORTATION
CROSS SECTIONS

Dist.	County	Route	Sect.	Prelim. Bk. No.	Final Bk. No.	Sheet No.
12-0	WESTMORELAND	0070	E10			264 OF 287

FILE: pw:\\gfnet-pw.bentley.com:gfnet-pw-01\Documents\Projects\61636\INPUT\COMP_01\C1V1LLROAD\SR70-E10 XS01 - F0.dgn
DATE: 2/9/2022 TIME: 11:26:45 AM

WHEELING & LAKE ERIE RAILROAD

STOP WORK
STA. 5037+90.00
RAILROAD

RAILROAD PROPERTY LINE

TCE

5038+00

PRELIMINARY	
C-0	F-0
FINAL	
C-	F-
TC-	TF-

ELEV. 990.50
G-993.06
ELEV. 990.50
ELEV. 988.50
40:1
2:1
(WORK BY OTHERS)
ELEV. 990.85
CL. 1 EXC. - RESIDUAL WASTE
= 97 S.F.

5037+50

PRELIMINARY	
C-0	F-0
FINAL	
C-	F-
TC-	TF-

ELEV. 990.78
G-993.34
ELEV. 990.78
ELEV. 988.78
(WORK BY OTHERS)
ELEV. 991.13
CL. 1 EXC. - RESIDUAL WASTE
= 96 S.F.

CERTIFIED CORRECT PLANS
Professional Engineer
Approved by Bureau of Technical Utility Services
PA PUBLIC UTILITY COMMISSION
ATTEST
Secretary

5037+00

PRELIMINARY	
C-0	F-1
FINAL	
C-	F-
TC-	TF-

Finals Plotted By
Finals Checked By
Area By
Area Checked By
Original Checked By
Template By
Area By
Application No.
Route No.
Original Plotted By TAB

SCALE: 1 INCH = 10 FEET

DISTRICT	COUNTY	ROUTE	SECTION	SHEET
12-0	WESTMORELAND	0070	E10	1 OF 135
ROSTRAVER AND SOUTH HUNTINGDON TOWNSHIPS				

REVISION NUMBER	REVISIONS	DATE	BY

REVIEWING AGENCIES:
PADEP SOUTHWEST REGIONAL OFFICE
400 WATERFRONT DRIVE
PITTSBURGH, PA 15222-4745
412-442-4000

WESTMORELAND CONSERVATION DISTRICT
218 DONOHOE ROAD
GREENSBURG, PA 15601-6987
724-837-5271

OWNER:
PENNSYLVANIA DEPARTMENT OF TRANSPORTATION - DISTRICT 12-0
825 N. GALLATIN AVE. EXT.
UNIONTOWN, PA 15401-2105
724-439-7315

PLAN PREPARER:
GANNETT FLEMING
FOSTER PLAZA 8, SUITE 400, 730 HOLIDAY DRIVE
PITTISBURGH, PA 15220
610-783-3731

EROSION AND SEDIMENT POLLUTION CONTROL PLAN

SR 0070 SECTION E10
INTERSTATE 70 (I-70) / SR 51 INTERCHANGE PROJECT
WESTMORELAND COUNTY

SHEET INDEX

DESCRIPTION	SHEET
TITLE SHEET	1
INDEX MAP	2-6
NOTES	7-11
CONSTRUCTION SEQUENCE	12-16
E&S PLANS	17-112
E&S DETAILS	113-135

PLAN LEGEND

- EXISTING CONTOUR (185)
- PROPOSED CONTOUR (185)
- 100 YR FLOODPLAIN
- TEMPORARY GRADING (T945)
- DRAINAGE STRUCTURE DESIGNATION (70-A1)
- PROPOSED INLET AND PIPES
- PROPOSED MANHOLE
- PROPOSED ENDWALL
- FLOW ARROW
- STREAM
- DIVERSION BERM
- ROCK CONSTRUCTION ENTRANCE (RCE)
- INLET PROTECTION
- INLET CAP
- COMPOST FILTER SOCK (CF)
- PROPOSED DITCH
- RIPRAP APRON
- TEMPORARY EXTENDED-TERM, ROLLED EROSION CONTROL PRODUCT, TYPE3B
- RIPRAP APRON DESIGNATION (ES-1)
- SOIL BOUNDARY/SOIL TEXT (CIB)
- LIMIT OF DISTURBANCE (LOD)
- NPDES BOUNDARY (NPDES)
- WORK AREA
- CONCRETE WASHOUT FACILITY (CWF)
- PROPOSED TREE LINE
- WETLAND
- DRAINAGE AREA TO BMP
- TEMPORARY PAVEMENT
- WEIGHTED SEDIMENT FILTER TUBE
- TEMPORARY EXCAVATION SUPPORT
- TEMPORARY PROTECTIVE FENCING (PF)
- FOUNDATION GROUND IMPROVEMENT AREA
- ROCK FILTER
- CLEANOUT STAKE
- TURBIDITY CURTAIN (TC)
- WATER BAR (WB)

• THE "LIMIT OF DISTURBANCE" LINE INDICATES THE LIMIT OF DISTURBED AREA ASSOCIATED WITH THE PROJECT. NO EARTH DISTURBANCE IS PERMITTED BEYOND THIS "LIMIT OF DISTURBANCE"

THE "NPDES BOUNDARY" REFERS TO ALL AREAS WITHIN THE PROJECT AREA, INCLUDING AREAS TO BE DISTURBED AND THOSE TO BE UNDISTURBED. IT SIGNIFIES THE BOUNDARY FOR ALL PROJECT ACTIVITIES PERMITTED UNDER THE NPDES PERMIT, DISTRICT ROADWAY MAINTENANCE ACTIVITIES AND CHAPTER 105 PERMIT ACTIVITIES FOR THIS PROJECT.

CERTIFIED CORRECT PLANS
Professional Engineer
Approved by Bureau of Technical Utility Services
PA PUBLIC UTILITY COMMISSION
ATTEST Secretary

PA ONE-CALL TOLL FREE TELEPHONE NO. 1-800-242-1776

PA ONE-CALL SERIAL NUMBER: 20212571358 (ROSTRAVER TOWNSHIP SR 70)
20212571425 (SOUTH HUNTINGDON TOWNSHIP SR 70)
20212571387 (ROSTRAVER TOWNSHIP SR 51)

PREPARED BY
Gannett Fleming
PITTSBURGH, PA

REG. PROF. ENGINEER

02/03/2022
DATE

COMMONWEALTH OF PENNSYLVANIA
REGISTERED PROFESSIONAL
LILI BHATT
ENGINEER
PE089620

FILE: pw:\\pfner-pw.bentley.com:pfner-pw-01\Documents\Projects\61636\OUTPUT\COMP_01\CIVIL\EROS\SR70-E10 2Sec ES11.dgn
DATE: 2/2/2022 TIME: 12:31:37 PM

DISTRICT	COUNTY	ROUTE	SECTION	SHEET
12-0	WESTMORELAND	0070	E10	5 OF 135
ROSTRAVER AND SOUTH HUNTINGDON TOWNSHIPS				

REVISION NUMBER	REVISIONS	DATE	BY

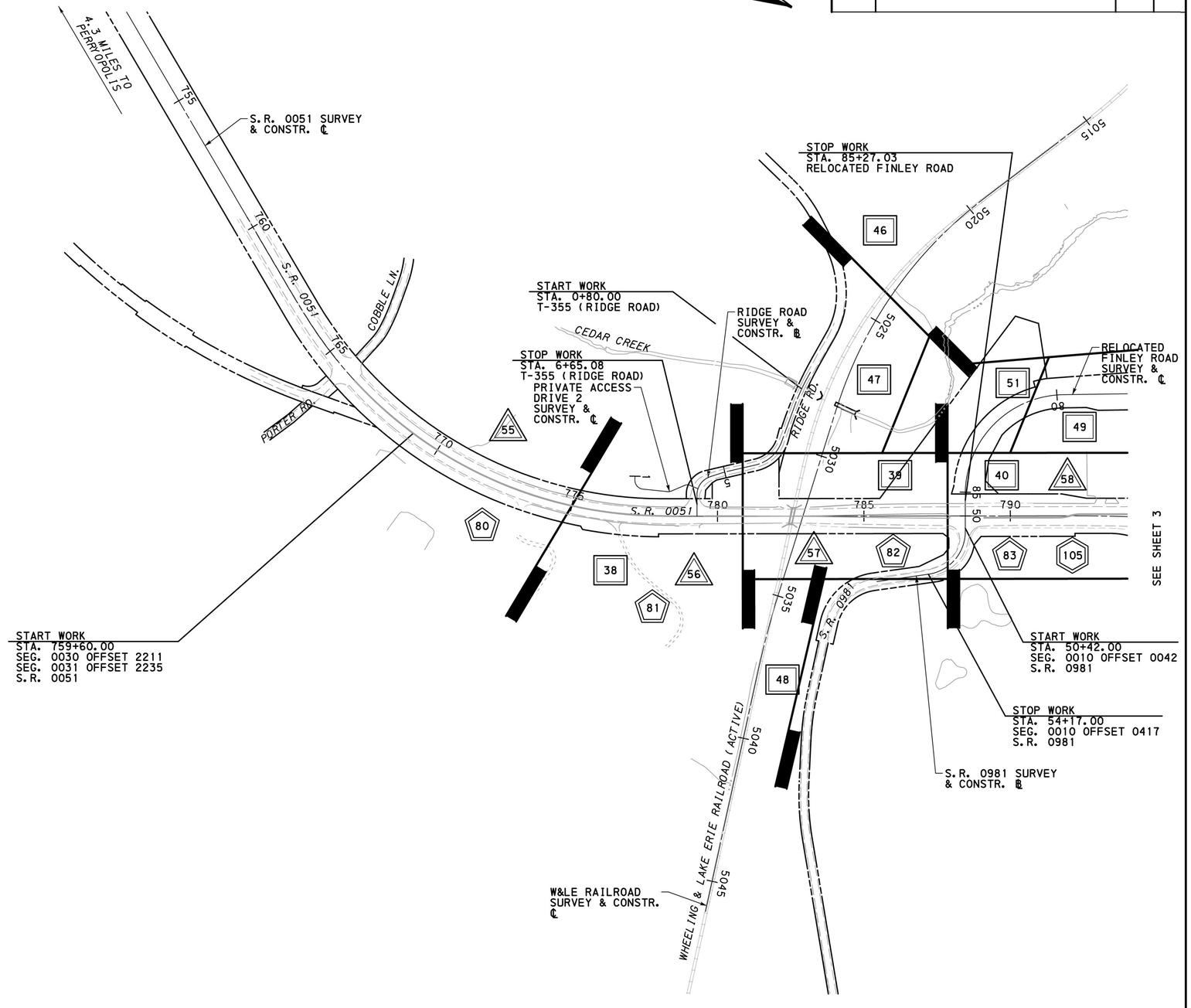

LEGEND

- SHEET BOUNDARY
- PLAN, STAGE 1
- PLAN, STAGE 2
- PLAN, STAGE 3
- PLAN, STAGE 4
- PLAN, STAGE 5

EROSION AND SEDIMENT POLLUTION CONTROL INDEX MAP

0 200 400 FEET

COMMONWEALTH OF PENNSYLVANIA
REGISTERED PROFESSIONAL ENGINEER
LILI BHATT
PE089620

FILE: pw:\\gfnet-pw.bentley.com:gfnet-pw-01\Documents\Projects\61636\OUTPUT\COMP_01\C1V1L\EROSS\SR70-E10 Index05.dgn
DATE: 2/3/2022 TIME: 12:31:55 PM

DISTRICT	COUNTY	ROUTE	SECTION	SHEET
12-0	WESTMORELAND	0070	E10	7 OF 135
ROSTRAVER AND SOUTH HUNTINGDON TOWNSHIPS				

REVISION NUMBER	REVISIONS	DATE	BY

STANDARD NOTES

1. ALL EARTH DISTURBANCES, INCLUDING CLEARING AND GRUBBING AS WELL AS CUTS AND FILLS SHALL BE DONE IN ACCORDANCE WITH THE APPROVED E&S PLAN. A COPY OF THE APPROVED DRAWINGS (STAMPED, SIGNED AND DATED BY THE REVIEWING AGENCY) MUST BE AVAILABLE AT THE PROJECT SITE AT ALL TIMES. THE REVIEWING AGENCY SHALL BE NOTIFIED OF ANY CHANGES TO THE APPROVED PLAN PRIOR TO IMPLEMENTATION OF THOSE CHANGES. THE REVIEWING AGENCY MAY REQUIRE A WRITTEN SUBMITTAL OF THOSE CHANGES FOR REVIEW AND APPROVAL AT ITS DISCRETION.

2. AT LEAST 7 DAYS PRIOR TO STARTING ANY EARTH DISTURBANCE ACTIVITIES, INCLUDING CLEARING AND GRUBBING, THE OWNER AND/OR OPERATOR SHALL INVITE ALL CONTRACTORS, THE LANDOWNER, APPROPRIATE MUNICIPAL OFFICIALS, THE E&S PLAN PREPARER, THE PCSM PLAN PREPARER, THE LICENSED PROFESSIONAL RESPONSIBLE FOR OVERSIGHT OF CRITICAL STAGES OF IMPLEMENTATION OF THE PCSM PLAN, AND A REPRESENTATIVE FROM THE LOCAL CONSERVATION DISTRICT TO AN ON-SITE PRECONSTRUCTION MEETING.

3. AT LEAST 3 DAYS PRIOR TO STARTING ANY EARTH DISTURBANCE ACTIVITIES, OR EXPANDING INTO AN AREA PREVIOUSLY UNMARKED, THE PENNSYLVANIA ONE CALL SYSTEM INC. SHALL BE NOTIFIED AT 1-800-242-1776 FOR THE LOCATION OF EXISTING UNDERGROUND UTILITIES.

4. ALL EARTH DISTURBANCE ACTIVITIES SHALL PROCEED IN ACCORDANCE WITH THE SEQUENCE PROVIDED ON THE PLAN DRAWINGS. DEVIATION FROM THAT SEQUENCE MUST BE APPROVED IN WRITING FROM THE LOCAL CONSERVATION DISTRICT OR BY THE DEPARTMENT PRIOR TO IMPLEMENTATION.

5. AREAS TO BE FILLED ARE TO BE CLEARED, GRUBBED, AND STRIPPED OF TOPSOIL TO REMOVE TREES, VEGETATION, ROOTS AND OTHER OBJECTIONABLE MATERIAL.

6. CLEARING, GRUBBING, AND TOPSOIL STRIPPING SHALL BE LIMITED TO THOSE AREAS DESCRIBED IN EACH STAGE OF THE CONSTRUCTION SEQUENCE. GENERAL SITE CLEARING, GRUBBING AND TOPSOIL STRIPPING MAY NOT COMMENCE IN ANY STAGE OR PHASE OF THE PROJECT UNTIL THE E&S BMPS SPECIFIED BY THE BMP SEQUENCE FOR THAT STAGE OR PHASE HAVE BEEN INSTALLED AND ARE FUNCTIONING AS DESCRIBED IN THIS E&S PLAN.

7. AT NO TIME SHALL CONSTRUCTION VEHICLES BE ALLOWED TO ENTER AREAS OUTSIDE THE LIMIT OF DISTURBANCE BOUNDARIES SHOWN ON THE PLAN MAPS. THESE AREAS MUST BE CLEARLY MARKED AND FENCED OFF BEFORE CLEARING AND GRUBBING OPERATIONS BEGIN.

8. TOPSOIL REQUIRED FOR THE ESTABLISHMENT OF VEGETATION SHALL BE STOCKPILED AT THE LOCATION(S) SHOWN ON THE PLAN MAPS(S) IN THE AMOUNT NECESSARY TO COMPLETE THE FINISH GRADING OF ALL EXPOSED AREAS THAT ARE TO BE STABILIZED BY VEGETATION. EACH STOCKPILE SHALL BE PROTECTED IN THE MANNER SHOWN ON THE PLAN DRAWINGS. STOCKPILE HEIGHTS SHALL NOT EXCEED 35 FEET. STOCKPILE SLOPES SHALL BE 2H:1V OR FLATTER.

9. IMMEDIATELY UPON DISCOVERING UNFORESEEN CIRCUMSTANCES POSING THE POTENTIAL FOR ACCELERATED EROSION AND/OR SEDIMENT POLLUTION, THE OPERATOR SHALL IMPLEMENT APPROPRIATE BEST MANAGEMENT PRACTICES TO MINIMIZE THE POTENTIAL FOR EROSION AND SEDIMENT POLLUTION AND NOTIFY THE LOCAL CONSERVATION DISTRICT AND/OR THE REGIONAL OFFICE OF THE DEPARTMENT.

10. ALL BUILDING MATERIALS AND WASTES SHALL BE REMOVED FROM THE SITE AND RECYCLED OR DISPOSED OF IN ACCORDANCE WITH THE DEPARTMENT'S SOLID WASTE MANAGEMENT REGULATIONS AT 25 PA. CODE 260.1 ET SEQ., 271.1, AND 287.1 ET. SEQ. NO BUILDING MATERIALS OR WASTES OR UNUSED BUILDING MATERIALS SHALL BE BURNED, BURIED, DUMPED, OR DISCHARGED AT THE SITE.

11. ALL OFF-SITE WASTE AND BORROW AREAS MUST HAVE AN E&S PLAN APPROVED BY THE LOCAL CONSERVATION DISTRICT OR THE DEPARTMENT FULLY IMPLEMENTED PRIOR TO BEING ACTIVATED.

12. THE CONTRACTOR IS RESPONSIBLE FOR ENSURING THAT ANY MATERIAL BROUGHT ON SITE IS CLEAN FILL. FORM FP-001 MUST BE RETAINED BY THE PROPERTY OWNER FOR ANY FILL MATERIAL AFFECTED BY A SPILL OR RELEASE OF A REGULATED SUBSTANCE BUT QUALIFYING AS CLEAN FILL DUE TO ANALYTICAL TESTING.

13. ALL PUMPING OF WATER FROM ANY WORK AREA SHALL BE DONE ACCORDING TO THE PROCEDURE DESCRIBED IN THIS PLAN, OVER UNDISTURBED VEGETATED AREAS.

14. VEHICLES AND EQUIPMENT MAY NEITHER ENTER DIRECTLY NOR EXIT DIRECTLY FROM ADJACENT LOTS WITHOUT FIRST RECEIVING WRITTEN APPROVAL FROM THE PROPERTY OWNER. ALL INTENT TO USE ADJACENT PROPERTIES FOR ACCESS MUST ALSO BE APPROVED BY THE PENNDOT REPRESENTATIVE. A ROCK CONSTRUCTION ENTRANCE MUST BE UTILIZED BY ALL VEHICLES AND EQUIPMENT TO ENTER AND EXIT ALL AREAS OUTSIDE PAVEMENT LIMITS.

15. UNTIL THE SITE IS STABILIZED, ALL EROSION AND SEDIMENT BMPS SHALL BE MAINTAINED PROPERLY. MAINTENANCE SHALL INCLUDE INSPECTIONS OF ALL EROSION AND SEDIMENT BMPS AFTER EACH RUNOFF EVENT AND ON A WEEKLY BASIS. ALL PREVENTATIVE AND REMEDIAL MAINTENANCE WORK, INCLUDING CLEAN OUT, REPAIR, REPLACEMENT, REGRADING, RESEEDING, REMULCHING AND RENETTING MUST BE PERFORMED IMMEDIATELY. IF THE E&S BMPS FAIL TO PERFORM AS EXPECTED, REPLACEMENT BMPS, OR MODIFICATIONS OF THOSE INSTALLED WILL BE REQUIRED.

16. A LOG SHOWING DATES THAT E&S BMPS WERE INSPECTED AS WELL AS ANY DEFICIENCIES FOUND AND THE DATE THEY WERE CORRECTED SHALL BE MAINTAINED ON THE SITE AND BE MADE AVAILABLE TO REGULATORY AGENCY OFFICIALS AT THE TIME OF INSPECTION.

17. SEDIMENT TRACKED ONTO ANY PUBLIC ROADWAY OR SIDEWALK SHALL BE RETURNED TO THE CONSTRUCTION SITE BY THE END OF EACH WORK DAY AND DISPOSED IN THE MANNER DESCRIBED IN THIS PLAN. IN NO CASE SHALL THE SEDIMENT BE WASHED, SHOVELED, OR SWEPT INTO ANY ROADSIDE DITCH, STORM SEWER, OR SURFACE WATER.

18. ALL SEDIMENT REMOVED FROM BMPS SHALL BE DISPOSED OF IN THE MANNER DESCRIBED ON THE PLAN DRAWINGS.

19. AREAS WHICH ARE TO BE TOPSOILED SHALL BE SCARIFIED TO A MINIMUM DEPTH OF 3 TO 5 INCHES 6 TO 12 INCHES ON COMPACTED SOILS PRIOR TO PLACEMENT OF TOPSOIL. AREAS TO BE VEGETATED SHALL HAVE A MINIMUM 4 INCHES OF TOPSOIL IN PLACE PRIOR TO SEEDING AND MULCHING. FILL OUTSLOPES SHALL HAVE A MINIMUM OF 2 INCHES OF TOPSOIL.

20. ALL FILLS SHALL BE COMPACTED AS REQUIRED TO REDUCE EROSION, SLIPPAGE, SETTLEMENT, SUBSIDENCE OR OTHER RELATED PROBLEMS. FILL INTENDED TO SUPPORT BUILDINGS, STRUCTURES AND CONDUITS, ETC. SHALL BE COMPACTED IN ACCORDANCE WITH LOCAL REQUIREMENTS OR CODES.

21. ALL EARTHEN FILLS SHALL BE PLACED IN COMPACTED LAYERS NOT TO EXCEED 9 INCHES IN THICKNESS.

22. FILL MATERIALS SHALL BE FREE OF FROZEN PARTICLES, BRUSH, ROOTS, SOD, OR OTHER FOREIGN OR OBJECTIONABLE MATERIALS THAT WOULD INTERFERE WITH OR PREVENT CONSTRUCTION OF SATISFACTORY FILLS.

23. FROZEN MATERIALS OR SOFT, MUCKY, OR HIGHLY COMPRESSIBLE MATERIALS SHALL NOT BE INCORPORATED INTO FILLS.

24. FILL SHALL NOT BE PLACED ON SATURATED OR FROZEN SURFACES.

25. SEEPS OR SPRINGS ENCOUNTERED DURING CONSTRUCTION SHALL BE HANDLED IN ACCORDANCE WITH THE STANDARD AND SPECIFICATION FOR SUBSURFACE DRAIN OR OTHER APPROVED METHOD.

26. ALL GRADED AREAS SHALL BE PERMANENTLY STABILIZED IMMEDIATELY UPON REACHING FINISHED GRADE. CUT SLOPES IN COMPETENT BEDROCK AND ROCK FILLS NEED NOT BE VEGETATED. SEEDED AREAS WITHIN 50 FEET OF A SURFACE WATER, OR AS OTHERWISE SHOWN ON THE PLAN DRAWINGS, SHALL BE BLANKETED ACCORDING TO THE STANDARDS OF THIS PLAN.

27. IMMEDIATELY AFTER EARTH DISTURBANCE ACTIVITIES CEASE IN ANY AREA OR SUBAREA OF THE PROJECT, THE OPERATOR SHALL STABILIZE ALL DISTURBED AREAS. DURING NON-GERMINATING MONTHS, MULCH OR PROTECTIVE BLANKETING SHALL BE APPLIED AS DESCRIBED IN THE PLAN. AREAS NOT AT FINISHED GRADE, WHICH WILL BE REACTIVATED WITHIN 1 YEAR, MAY BE STABILIZED IN ACCORDANCE WITH THE TEMPORARY STABILIZATION SPECIFICATIONS. THOSE AREAS WHICH WILL NOT BE REACTIVATED WITHIN 1 YEAR SHALL BE STABILIZED IN ACCORDANCE WITH THE PERMANENT STABILIZATION SPECIFICATIONS.

28. PERMANENT STABILIZATION IS DEFINED AS A MINIMUM UNIFORM, PERENNIAL 70% VEGETATIVE COVER OR OTHER PERMANENT NON-VEGETATIVE COVER WITH A DENSITY SUFFICIENT TO RESIST ACCELERATED EROSION. CUT AND FILL SLOPES SHALL BE CAPABLE OF RESISTING FAILURE DUE TO SLUMPING, SLIDING, OR OTHER MOVEMENTS.

29. E&S BMPS SHALL REMAIN FUNCTIONAL AS SUCH UNTIL ALL AREAS TRIBUTARY TO THEM ARE PERMANENTLY STABILIZED OR UNTIL THEY ARE REPLACED BY ANOTHER BMP APPROVED BY THE LOCAL CONSERVATION DISTRICT OR THE DEPARTMENT.

30. UPON COMPLETION OF ALL EARTH DISTURBANCE ACTIVITIES AND PERMANENT STABILIZATION OF ALL DISTURBED AREAS, THE OWNER AND/OR OPERATOR SHALL CONTACT THE LOCAL CONSERVATION DISTRICT FOR AN INSPECTION PRIOR TO REMOVAL/CONVERSION OF THE E&S BMPS.

31. AFTER FINAL SITE STABILIZATION HAS BEEN ACHIEVED, TEMPORARY EROSION AND SEDIMENT BMPS MUST BE REMOVED OR CONVERTED TO PERMANENT POST CONSTRUCTION STORMWATER MANAGEMENT BMPS. AREAS DISTURBED DURING REMOVAL OR CONVERSION OF THE BMPS SHALL BE STABILIZED IMMEDIATELY. IN ORDER TO ENSURE RAPID REVEGETATION OF DISTURBED AREAS, SUCH REMOVAL/CONVERSIONS ARE TO BE DONE ONLY DURING THE GERMINATING SEASON.

32. UPON COMPLETION OF ALL EARTH DISTURBANCE ACTIVITIES AND PERMANENT STABILIZATION OF ALL DISTURBED AREAS, THE OWNER AND/OR OPERATOR SHALL CONTACT THE LOCAL CONSERVATION DISTRICT TO SCHEDULE A FINAL INSPECTION.

33. FAILURE TO CORRECTLY INSTALL E&S BMPS, FAILURE TO PREVENT SEDIMENT-LADEN RUNOFF FROM LEAVING THE CONSTRUCTION SITE, OR FAILURE TO TAKE IMMEDIATE CORRECTIVE ACTION TO RESOLVE FAILURE OF E&S BMPS MAY RESULT IN ADMINISTRATIVE, CIVIL, AND/OR CRIMINAL PENALTIES BEING INSTITUTED BY THE DEPARTMENT AS DEFINED IN SECTION 602 OF THE PENNSYLVANIA CLEAN STREAMS LAW. THE CLEAN STREAMS LAW PROVIDES FOR UP TO $10,000 PER DAY IN CIVIL PENALTIES, UP TO $10,000 IN SUMMARY CRIMINAL PENALTIES, AND UP TO $25,000 IN MISDEMEANOR CRIMINAL PENALTIES FOR EACH VIOLATION.

34. CONCRETE WASH WATER SHALL BE HANDLED IN THE MANNER DESCRIBED ON THE PLAN DRAWINGS. IN NO CASE SHALL IT BE ALLOWED TO ENTER ANY SURFACE WATERS OR GROUNDWATER SYSTEMS. FOR ALL CONCRETE WORK IN OR ALONG THE STREAM CHANNEL, ALLOW CONCRETE TO HARDEN ENOUGH TO SUPPORT FOOT TRAFFIC. FLUSH CONCRETE WITH STREAM WATER AND PUMP TO AN UPLAND AREA TO DISCHARGE IN A MANNER THAT PREVENTS EROSION AND RE-ENTRY OF THE WATER TO THE STREAM. USE A PROPERLY CALIBRATED PH METER TO MONITOR DISCHARGE UNTIL PH FALLS BELOW 9.0 BEFORE ALLOWING THE STREAM TO DIRECTLY CONTACT NEW CONCRETE.

35. ALL CHANNELS SHALL BE KEPT FREE OF OBSTRUCTIONS INCLUDING BUT NOT LIMITED TO FILL, ROCKS, LEAVES, WOODY DEBRIS, ACCUMULATED SEDIMENT, EXCESS VEGETATION, AND CONSTRUCTION MATERIAL/WASTES.

36. UNDERGROUND UTILITIES CUTTING THROUGH ANY ACTIVE CHANNEL SHALL BE IMMEDIATELY BACKFILLED AND THE CHANNEL RESTORED TO ITS ORIGINAL CROSS-SECTION AND PROTECTIVE LINING. ANY BASE FLOW WITHIN THE CHANNEL SHALL BE CONVEYED PAST THE WORK AREA IN THE MANNER DESCRIBED IN THIS PLAN UNTIL SUCH RESTORATION IS COMPLETE.

37. CHANNELS HAVING RIPRAP, RENO MATTRESS, OR GABION LININGS MUST BE SUFFICIENTLY OVER-EXCAVATED SO THAT THE DESIGN DIMENSIONS WILL BE PROVIDED AFTER PLACEMENT OF THE PROTECTIVE LINING.

38. SEDIMENT BASINS AND/OR TRAPS SHALL BE KEPT FREE OF ALL CONSTRUCTION WASTE, WASH WATER, AND OTHER DEBRIS HAVING POTENTIAL TO CLOG THE BASIN/TRAP OUTLET STRUCTURES AND/OR POLLUTE THE SURFACE WATERS.

39. SEDIMENT BASINS SHALL BE PROTECTED FROM UNAUTHORIZED ACTS BY THIRD PARTIES.

40. ANY DAMAGE THAT OCCURS IN WHOLE OR IN PART AS A RESULT OF BASIN OR TRAP DISCHARGE SHALL BE IMMEDIATELY REPAIRED BY THE PERMITTEE IN A PERMANENT MANNER SATISFACTORY TO THE MUNICIPALITY, LOCAL CONSERVATION DISTRICT, AND THE OWNER OF THE DAMAGED PROPERTY.

41. UPON REQUEST, THE APPLICANT OR HIS CONTRACTOR SHALL PROVIDE AN AS-BUILT (RECORD DRAWING) FOR ANY SEDIMENT BASIN OR TRAP TO THE MUNICIPAL INSPECTOR, LOCAL CONSERVATION DISTRICT OR THE DEPARTMENT.

42. EROSION CONTROL BLANKETING SHALL BE INSTALLED ON ALL SLOPES 3H:1V OR STEEPER WITHIN 50 FEET OF A SURFACE WATER AND ON ALL OTHER DISTURBED AREAS SPECIFIED ON THE PLAN MAPS AND/OR DETAIL SHEETS.

43. FILL MATERIAL FOR EMBANKMENTS SHALL BE FREE OF ROOTS, OR OTHER WOODY VEGETATION, ORGANIC MATERIAL, LARGE STONES, AND OTHER OBJECTIONABLE MATERIALS THAT WILL INTERFERE WITH OR PREVENT CONSTRUCTION OF SATISFACTORY FILLS.

PROJECT DESCRIPTION

I-70 SECTION E10 PROJECT INCLUDES RECONSTRUCTION OF I-70 FROM THE WESTERN LIMIT NEAR SPRING ROAD AND NICHOLLS HILL ROAD TO EAST OF THE SMITHTON HIGH-LEVEL BRIDGE OVER THE YOUGHIOGHENY RIVER. FINAL ROADWAY INCLUDES A 10' MEDIAN, FOUR 12' TRAVEL LANES AND 12' OUTSIDE SHOULDERS. LIMIT OF SR 51 INCLUDES SOUTH OF THE RAILROAD OVERPASS TO NORTH OF THE CONCORD LANE INTERSECTION. THE INTERCHANGE RECONFIGURATION INCLUDES REPLACEMENT OF A SUBSTANDARD CLOVERLEAF TO A DIVERGING DIAMOND INTERCHANGE (DDI). PROJECT ALSO INCLUDES ADDITION OF LEFT TURN LANE TO RIDGE ROAD, CONSTRUCTION OF RELOCATED FINLEY ROAD, RELOCATION OF SMITH ROAD AND CUL-DE-SACS AT THE ENDS OF OLD FINLEY ROAD, WEST MCCLAIN ROAD AND RELOCATED SMITH ROAD. THE PAST, PRESENT AND PROPSOED LAND USE IS TRANSPORTATION.

RECEIVING WATERS AND WETLANDS

PROJECT AREA FOR SR70-E10 FALLS UNDER LOWER YOUGHIOGHENY RIVER WATERSHED. AREA IS SUBDIVIDED INTO CEDAR CREEK AND PORT ROYAL (TRIB TO YOUGHIOGHENY RIVER) FOLLOWING ROSTRAVER TOWNSHIP ORDINANCE. PA CODE CHAPTER 93 CLASSIFICATION OF CEDAR CREEK IS TSF (TROUT STOCKED FISHES) AND IS IMPAIRED FOR SILTATION. TRIB TO YOUGHIOGHENY IS WWF (WARM WATER FISHES) AND THERE IS NO IMPAIRMENT IDENTIFIED. THERE IS NO IN STREAM RESTRICTION. WETLANDS WILL BE IMPACTED BY PROJECT AREA.

FLOODWAY RESTRICTION

NO BACKFILL MATERIALS FROM THE PROJECT MAY BE STORED WITHIN THE FLOODWAY.

THERMAL IMPACTS

THIS PROJECT PROPOSES AN INCREASE IN IMPERVIOUS AREA OF 6.76 ACRES. TO MITIGATE THERMAL IMPACTS TO RECEIVING WATERS, NINE EXTENDED DETENTION BASINS ARE PROPOSED THROUGHOUT THE PROJECT LIMIT. THESE NINE BASINS WILL TREAT WATER THROUGH EXTENDED DETENTION. ANY WATER NOT GETTING TO THESE BASINS WILL EITHER FLOW THROUGH THE PROPOSED VEGETATED CHANNEL OR WILL SHEET FLOW THROUGH THE GRASS AREA BEFORE GETTING BACK TO THE RECEIVING WATERS. THIS WILL ALLOW RUNOFF TO BE NATURALLY COOLED. NO NEGATIVE THERMAL IMPACTS TO RECEIVING STREAMS ARE EXPECTED.

GEOLOGIC SOIL CONDITIONS

THERE ARE NO ANTICIPATED GEOLOGIC CONDITIONS THAT MAY HAVE THE POTENTIAL TO CAUSE POLLUTION DURING EARTH DISTURBANCE ACTIVITIES.

EROSION AND SEDIMENT POLLUTION CONTROL NOTES

COMMONWEALTH OF PENNSYLVANIA
REGISTERED PROFESSIONAL
LILI BHATT
ENGINEER
PE089620

FILE: pw:\\pfner1-pw.bentley.com:pfner1-pw-01\Documents\Projects\61636\OUTPUT\COMP_01\CIVIL\ERDOSSR70-E10 ESGN01.dgn
DATE: 6/7/2022 TIME: 12:30:02 PM

STANDARD NOTES, CONT

ENVIRONMENTAL DUE DILIGENCE DEFINITION

TAKEN FROM "PERMIT SUMMARY SHEET FOR GENERAL (PAG-02) OR INDIVIDUAL NPDES PERMIT FOR STORMWATER DISCHARGES ASSOCIATED WITH CONSTRUCTION ACTIVITIES", PREPARED BY THE PENNSYLVANIA DEPARTMENT OF ENVIRONMENTAL PROTECTION, DATED MAY 2007

"INVESTIGATE TECHNIQUES, INCLUDING, BUT NOT LIMITED TO, VISUAL PROPERTY INSPECTIONS, ELECTRONIC DATA BASE SEARCHES, REVIEW OF PROPERTY OWNERSHIP, REVIEW OF PROPERTY USE HISTORY, SANBORN MAPS, ENVIRONMENTAL QUESTIONNAIRES, TRANSACTION SCREENS, ANALYTICAL TESTING, ENVIRONMENTAL ASSESSMENTS OR AUDITS.

ANALYTICAL TESTING IS NOT A REQUIRED PART OF DUE DILIGENCE UNLESS VISUAL INSPECTION AND/OR REVIEW OF THE PAST LAND USE OF THE PROPERTY INDICATES THAT THE FILL MAY HAVE BEEN SUBJECTED TO A SPILL OR RELEASE OF REGULATED SUBSTANCE. IF THE FILL MAY HAVE BEEN AFFECTED BY A SPILL OR RELEASE OF A REGULATED SUBSTANCE, IT MUST BE TESTED TO DETERMINE IF IT QUALIFIES AS CLEAN FILL. TESTING SHOULD BE PERFORMED IN ACCORDANCE WITH APPENDIX A OF THE DEPARTMENT'S POLICY 'MANAGEMENT OF FILL."

CLEAN FILL AND RECYCLING OF WASTE MATERIALS

THE OPERATOR SHALL REMOVE FROM THE SITE, RECYCLE, OR DISPOSE OF ALL BUILDING MATERIALS AND WASTE IN ACCORDANCE WITH THE DEPARTMENT'S SOLID WASTE MANAGEMENT REGULATIONS AT 25 PA CODE 260.1 ET SEQ., 271.1 ET DEQ., AND 287.1 ET SEQ. THE CONTRACTOR SHALL NOT ILLEGALLY BURY, DUMP, OR DISCHARGE ANY BUILDING MATERIALS OR WASTE AT THE SITE.

IF THE SITE WILL NEED TO IMPORT OR EXPORT MATERIAL FROM THE SITE, THE RESPONSIBILITY FOR PERFORMING ENVIRONMENTAL DUE DILIGENCE AND DETERMINATION OF CLEAN FILL WILL REST WITH THE CONTRACTOR. CLEAN FILL IS DEFINED AS: UNCONTAMINATED, NON-WATER SOLUBLE, NON-DECOMPOSABLE, INERT, SOLID MATERIAL. THE TERM INCLUDES SOIL, ROCK, STONE, DREDGED MATERIAL, USED ASPHALT, AND BRICK, BLOCK OR CONCRETE FROM CONSTRUCTION AND DEMOLITION ACTIVITIES THAT IS SEPARATE FROM OTHER WASTE AND IS RECOGNIZABLE AS SUCH. THE TERM DOES NOT INCLUDE MATERIALS PLACED IN OR ON THE WATERS OF THE COMMONWEALTH UNLESS OTHERWISE AUTHORIZED. (THE TERM "USED ASPHALT" DOES NOT INCLUDE MILLED ASPHALT OR ASPHALT THAT HAS BEEN PROCESSED FOR RE-USE).

CLEAN FILL AFFECTED BY A SPILL OR RELEASE OF A REGULATED SUBSTANCE: FILL MATERIALS AFFECTED BY A SPILL OR RELEASE OF A REGULATED SUBSTANCE STILL QUALIFIES AS CLEAN FILL PROVIDED THE TESTING REVEALS THAT THE FILL MATERIAL CONTAINS CONCENTRATIONS OF REGULATED SUBSTANCES THAT ARE BELOW THE RESIDENTIAL LIMITS IN TABLE FP-1A AND FP-1B FOUND IN THE DEPARTMENT'S POLICY "MANAGEMENT OF FILL".

ANY PERSON PLACING CLEAN FILL THAT HAS BEEN AFFECTED BY A SPILL OR RELEASE OF A REGULATED SUBSTANCE MUST USE FP-001 TO CERTIFY THE ORIGIN OF THE FILL MATERIAL AND THE RESULTS OF THE ANALYTICAL TESTING TO QUALIFY THE MATERIAL AS CLEAN FILL. FORM FP-001 MUST BE RETAINED BY THE OWNER OF THE PROPERTY RECEIVING THE FILL. A COPY OF FORM FP-001 CAN BE FOUND AT THE END OF THESE INSTRUCTIONS.

ENVIRONMENTAL DUE DILIGENCE: THE APPLICANT MUST PERFORM ENVIRONMENTAL DUE DILIGENCE TO DETERMINE IF FILL MATERIALS ASSOCIATED WITH THE PROJECT QUALIFY AS CLEAN FILL. ENVIROMENTAL DUE DILIGENCE IS DEFINED AS: INVESTIGATIVE TECHNIQUES, INCLUDING, BUT NOT LIMITED TO, VISUAL PROPERTY INSPECTIONS, ELETRONIC DATA BASE SEARCHES , REVIEW OF PROPERTY OWNERSHIP, REVIEW OF PROPERTY USE HISTORY, SANBORN MAPS, ENVIRONMENTAL QUESTIONAIRES, TRANSACTION SCREENS, ANALYTICAL TESTING, ENVIRONMENTAL ASSESSMENT OR AUDITS, ANALYTICAL TESTING IS NOT A REQUIRED PART OF DUE DILIGENCE UNLESS VISUAL INSPECTION AND/OR REVIEW OF THE PAST LAND USE OF THE PROPERTY INDICATES THAT THE FILL MAY HAVE BEEN SUBJECTED TO A SPILL OR RELEASE OF REGULATED SUBSTANCE. IF THE FILL MAY HAVE BEEN AFFECTED BY A SPILL OR RELEASE OF A REGULATED SUBSTANCE, IT MUST BE TESTED TO DETERMINE IF IT QUALIFIES AS CLEAN FILL. TESTING SHOULD BE PERFORMED IN ACCORDANCE WITH APPENDIX A OF THE DEPARTMENT'S POLICY "MANAGEMENT OF FILL".

FILL MATERIAL THAT DOES NOT QUALIFY AS CLEAN FILL IS REGULATED FILL. REGULATED FILL IS WASTE AND MUST BE MANAGED IN ACCORDANCE WITH THE DEPARTMENT'S MUNICIPAL OR RESIDUAL WASTE REGULATIONS BASED ON 25 PA CODE CHAPTERS 287 RESIDUAL WASTE MANAGEMENT OR 271 MUNICIPAL WASTE MANAGEMENT, WHICHEVER IS APPLICABLE. THESE REGULATIONS ARE AVAILABLE ON-LINE AT WWW.PACODE.COM

TRENCH EXCAVATION

1. LIMIT ADVANCE CLEARING AND GRUBBING OPERATIONS TO A DISTANCE EQUAL TO TWO TIMES THE LENGTH OF PIPE INSTALLATION THAT CAN BE COMPLETED IN ONE DAY.

2. WORK CREWS AND EQUIPMENT FOR TRENCHING, PLACEMENT OF PIPE, PLUG CONSTRUCTION AND BACKFILLING WILL BE SELF CONTAINED AND SEPERATE FROM CLEARING AND GRUBBING AND SITE RESTORATION AND STABILIZATION OPERATIONS.

3. ALL SOIL EXCAVATED FROM THE TRENCH WILL BE PLACED ON THE UPHILL SIDE OF THE TRENCH.
4. LIMIT DAILY TRENCH EXCAVATION TO THE LENGTH OF PIPE PLACEMENT AND BACKFILLING THAT CAN BE COMPLETED THE SAME DAY.

5. WATER WHICH ACCUMULATES IN THE OPEN TRENCH WILL BE COMPLETELY REMOVED BY PUMPING, BEFORE PIPE PLACEMENT AND/OR BACKFILLING OCCURS. WATER REMOVED FROM TRENCH SHALL BE PUMPED THROUGH A FILTRATION DEVICE.

6. ON THE DAY FOLLOWING PIPE PLACEMENT AND TRENCH BACKFILLING, THE DISTURBED AREA WILL BE GRADED TO FINAL CONTOURS AND APPROPRIATE TEMPORARY EROSION AND SEDIMENT POLLUTION CONTROL MEASURES/FACILITIES WILL BE INSTALLED. SEEDING AND MULCHING OF ALL DISTURBED AREAS WILL BE DONE AT THE END OF EACH WEEK.

PROJECT ANTICIPATED WASTE MATERIALS

CONSTRUCTION WASTES ANTICIPATED FOR THIS PROJECT ARE CONCRETE, STEEL, AND PAVEMENT ASSOCIATED WITH THE BRIDGE CONSTRUCTION AND ROADWAY IMPROVEMENTS. APPROVED MATERIALS MAY BE WASTED ON -SITE AT THESE PROVIDED LOCATIONS. ALL CONSTRUCTION MATERIALS NOT WASTED ON -SITE MUST BE RECYCLED OR DISPOSED OF IN ACCORDANCE WITH APPLICABLE LAWS AS SHOWN ON THIS PLAN.

EROSION AND SEDIMENT POLLUTION CONTROL NOTES

COMMONWEALTH OF PENNSYLVANIA
REGISTERED PROFESSIONAL ENGINEER
LILI BHATT
PE089620

FILE: pw:\\pfnet-pw.bentley.com:pfnet-pw-01\Documents\Projects\61636\OUTPUT\COMP_01\CIVIL\EROS\SR70-E10 ESGN01a.dgn
DATE: 2/3/2022 TIME: 12:25:05 PM

DISTRICT	COUNTY	ROUTE	SECTION	SHEET
12-0	WESTMORELAND	0070	E10	9 OF 135
ROSTRAVER AND SOUTH HUNTINGDON TOWNSHIPS				

REVISION NUMBER	REVISIONS	DATE	BY

WESTMORELAND COUNTY SOILS
SOIL USE LIMITATIONS AND RESOLUTIONS

MAP SYMBOL	SOIL	LOCAL ROADS AND STREETS	RESOLUTIONS*	TRENCH	RESOLUTIONS*	ROAD FILL	RESOLUTIONS*	TOPSOIL	RESOLUTIONS*	EMBANKMENTS	RESOLUTIONS*
CIB	CLARKSBURG SILT LOAM, 3 TO 8 PERCENT SLOPES	VERY LIMITED	C	VERY LIMITED	C	FAIR	F	FAIR	F	VERY LIMITED	A
CuD	CULLEOKA CHANNERY SILT LOAM, 15 TO 25 PERCENT SLOPES	VERY LIMITED	C	VERY LIMITED	C	POOR	B	POOR	F	SOMEWHAT LIMITED	C
DoB	DORMONT SILT LOAM, 3 TO 8 PERCENT SLOPES	VERY LIMITED	C	SOMEWHAT LIMITED	A	POOR	B	FAIR	F	SOMEWHAT LIMITED	C
DoC	DORMONT SILT LOAM, 8 TO 15 PERCENT SLOPES	VERY LIMITED	C	SOMEWHAT LIMITED	A	POOR	B	FAIR	F	SOMEWHAT LIMITED	C
DoD	DORMONT SILT LOAM, 15 TO 25 PERCENT SLOPES	VERY LIMITED	C	VERY LIMITED	C	POOR	B	POOR	B	SOMEWHAT LIMITED	C
DrD	DORMONT-CULLEOKA COMPLEX, 15 TO 25 PERCENT SLOPES	VERY LIMITED	C	VERY LIMITED	C	POOR	B	POOR	B	SOMEWHAT LIMITED	C
GoF	GILPIN-ROCK OUTCROP COMPLEX, 45 TO 100 PERCENT SLOPES	VERY LIMITED	C	VERY LIMITED	C	POOR	B	POOR	B	VERY LIMITED	A
GxA	GINAT SILT LOAM, 0 TO 2 PERCENT SLOPES	VERY LIMITED	C	VERY LIMITED	C	POOR	B	POOR	B	VERY LIMITED	A
GyC	GUERNSEY SILT LOAM, 8 TO 15 PERCENT SLOPES	VERY LIMITED	C	VERY LIMITED	C	POOR	B	FAIR	F	VERY LIMITED	A
LIC	LIBRARY SILT LOAM, 8 TO 15 PERCENT SLOPES	VERY LIMITED	C	VERY LIMITED	C	POOR	B	FAIR	F	VERY LIMITED	A
Mn	MELVIN AND NEWARK SILT LOAMS, 0 TO 2 PERCENT SLOPES	VERY LIMITED	C	VERY LIMITED	C	POOR	B	FAIR	F	VERY LIMITED	A
MoA	MONONGAHELA SILT LOAM, 0 TO 3 PERCENT SLOPES	VERY LIMITED	C	VERY LIMITED	C	POOR	B	FAIR	F	VERY LIMITED	A
MoB	MONONGAHELA SILT LOAM, 3 TO 8 PERCENT SLOPES	VERY LIMITED	C	VERY LIMITED	C	POOR	B	FAIR	F	VERY LIMITED	A
ThB	THORNDALE SILT LOAM, 3 TO 8 PERCENT SLOPES	VERY LIMITED	C	VERY LIMITED	C	POOR	B	POOR	B	VERY LIMITED	A
UdD	UDORTHENTS, 8 TO 25 PERCENT SLOPES	VERY LIMITED	C	VERY LIMITED	C	FAIR	F	POOR	B	SOMEWHAT LIMITED	C
UhB	URBAN LAND-GUERNSEY COMPLEX, 0 TO 8 PERCENT SLOPES	NOT RATED	E	NOT RATED	A	NOT RATED	A	NOT RATED	A	NOT RATED	A

*SOIL RESOLUTION KEY
A. CONSULT WITH ENGINEER
B. OVER-EXCAVATE MATERIAL AND REPLACE WITH SUITABLE MATERIAL
C. USE PUMP WATER FILTER BAG TO DEWATER EXCAVATION
E. ENSURE POSITIVE DRAINAGE AWAY FROM EXCAVATION
F. IMPORT SUITABLE TOPSOIL IF EXISTING MATERIAL IS INADEQUATE

EROSION AND SEDIMENT POLLUTION CONTROL NOTES

COMMONWEALTH OF PENNSYLVANIA
REGISTERED PROFESSIONAL ENGINEER
LILI BHATT
PE089620

FILE: pw:\\pfnet-pw.bentley.com:pfnet-pw-01\Documents\Projects\61636\OUTPUT\COMP_01\CIVIL\EROSSR70-E10 ESGN02.dgn
DATE: 2/2/2022 TIME: 12:20:07 PM

DISTRICT	COUNTY	ROUTE	SECTION	SHEET
12-0	WESTMORELAND	0070	E10	10 OF 135
ROSTRAVER AND SOUTH HUNTINGDON TOWNSHIPS				

REVISION NUMBER	REVISIONS	DATE	BY

BMP INSPECTION, MAINTENANCE, AND REPAIR SCHEDULE

BMP	INSPECTION	MAINTENANCE	REPAIR
COMPOST FILTER SOCK	WEEKLY AND AFTER EACH RAINFALL EVENT	REMOVE SEDIMENT WHEN IT HALF THE ABOVEGROUND HEIGHT OF THE SOCK.	DAMAGED SOCK SHALL BE REPAIRED ACCORDING TO MANUFACTURER'S SPECIFICATION OR REPLACED WITHIN 24 HOURS OF INSPECTION.
INLET FILTER BAG	WEEKLY AND AFTER EACH RAINFALL EVENT	REMOVE SEDIMENT WHEN IT REACHES 1/2 OF THE MAXIMUM CAPACITY OF THE BAG	IF DAMAGED, REPLACE WITH SPECIFIED FILTER BAG
STONE INLET PROTECTION	WEEKLY AND AFTER EACH RAINFALL EVENT	REMOVE SEDIMENT WHEN IT REACHES 1/2 THE HEIGHT OF THE STONE.	DAMAGED OR CLOGGED INSTALLATIONS SHALL BE REPAIRED OR REPLACED IMMEDIATELY.
PUMPED WATER FILTER BAG	DAILY	IF ANY PROBLEM IS DETECTED, PUMPING SHALL CEASE IMMEDIATELY AND NOT RESUME UNTIL THE PROBLEM IS CORRECTED.	REPLACE WITH NEW FILTER BAG.
RIPRAP APRON	WEEKLY AND AFTER EACH RAINFALL EVENT	DISPLACED ROCK WITHIN THE APRON SHALL BE REPLACED IMMEDIATELY.	DISPLACED RIPRAP WITHIN THE APRON SHALL BE REPLACED IMMEDIATELY.
ROCK CONSTRUCTION ENTRANCE	DAILY	REMOVE SEDIMENT FROM RCE AND ROADWAY AND REDISTRIBUTE ON SITE	MAINTAIN THICKNESS AND DIMENSIONS BY ADDING ROCK. A STOCKPILE SHALL BE MAINTAINED ON SITE FOR THIS PURPOSE.
ROCK FILTER	WEEKLY AND AFTER EACH RAINFALL EVENT	SEDIMENT SHALL BE REMOVED WHEN ACCUMULATION REACH ½ THE HEIGHT OF THE FILTER.*	NEEDED REPAIRS SHOULD BE INITIATED IMMEDIATELY AFTER INSPECTION. CLOGGED FILTER STONE (AASHTO #57) SHOULD BE REPLACED.
SEDIMENT BASIN/TRAP	WEEKLY AND AFTER EACH RAINFALL EVENT	REMOVE SEDIMENT WHEN IT REACHES THE ELEVATION INDICATED ON THE CLEAN OUT STAKE. REMOVE TRASH AND DERIS FROM BASIN AND OUTLET STRUCTURE	CHECK TRAP/BASIN BERMS, EMBANKMENTS, SPILLWAYS,AND OUTLETS FOR EROSION, PIPING AND SETTLEMENT.MAKE NECESSARY REPAIRS IMMEDIATELY. REPAIR CLOGGED OR DAMAGED SPILLWAYS IMMEDIATELY. RE-GRADE SEDIMENT TRAP IF DEFORMED DUE TO SEDIMENT REMOVAL. IF STONE EMBANKMENT OUTLET IS CLOGGED OR DISPLACED, REPLACE TO DESIGN DIMENSIONS. IF STONE RISER IS CLOGGED OR DISPLACED, REPLACE TO DESIGN DIMENSIONS.
SEEDING AND MULCHING	WEEKLY AND AFTER EACH RAINFALL EVENT	IF WASHOUTS OCCUR, EVALUATE IF CONCENTRATED FLOW IS LIKELY TO HAPPEN AGAIN. IF SO, RE-SEED AND STABILIZE WITH AN APPROPRIATE RECP. IF CONCENTRATED FLOW IS NOT LIKELY TO HAPPEN AGAIN, RE-SEED AND APPLY MULCH	
ROLLED EROSION CONTROL PRODUCTS	WEEKLY AND AFTER EACH RAINFALL EVENT	IF WASHOUTS OCCUR, EVALUATE IF CONCENTRATED FLOW IS LIKELY TO HAPPEN AGAIN. IF SO, RE-SEED AND STABILIZE WITH AN APPROPRIATE RECP UTILIZING HIGH SHEAR STRESS INSTALLATION AS RECOMENDED BY MANUFACTURER.	IF WASHOUTS OCCUR, EVALUATE IF CONCENTRATED FLOW IS LIKELY TO HAPPEN AGAIN. IF SO, RE-SEED AND STABILIZE WITH AN APPROPRIATE RECP UTILIZING HIGH SHEAR STRESS INSTALLATION AS RECOMENDED BY MANUFACTURER.
FLUME THROUGH WORK AREA	DAILY AND AFTER EACH RAINFALL EVENT	ENSURE FLUME OPENING STAYS CLEAR OF DEBRIS	REPLACE DAMAGED OUTLET ENERGY DISSAPATOR.
TEMPORARY BYPASS CHANNEL	DAILY AND AFTER EACH RAINFALL EVENT	REMOVE ACCUMULATED SEDIMENT AND DEBRIS.	REPLACE DAMAGED CHANNEL LINING AS NECESSARY.
TEMPORARY STREAM CROSSING	DAILY AND AFTER EACH RAINFALL EVENT	REMOVE ACCUMULATED SEDIMENT AND DEBRIS.	REPLACE DAMAGED STREAM CROSSING AS NECESSARY.
CONCRETE WASHOUT	DAILY	ACCUMULATED MATERIALS SHOULD BE REMOVED WHEN THEY REACH 75% CAPACITY. PLASTIC LINERS SHOULD BE REPLACED WITH EACH CLEANING OF THE WASHOUT FACILITY.	DAMGED OR LEAKING WASHOUTS SHOULD BE DEACTIVATED AND REPAIRED OR REPLACED IMMEDIATELY.
WEIGHTED SEDIMENT FILTER TUBE	WEEKLY AND AFTER EACH RAINFALL EVENT	ACCUMULATED SEDIMENT SHALL BE REMOVED WHEN IT REACHES HALF THE HEIGHT OF THE TUBE AND DISPOSED AS DIRECTED.	DAMAGED TUBES SHALL BE REPAIRED OR REPLACED WITHIN 24 HOURS OF INSPECTION. A SUPPLY OF TUBES SHALL BE KEPT ON SITE FOR THIS PURPOSE.
DIVERSION BERM	WEEKLY AND AFTER EACH RAINFALL EVENT	DIVERSION BERM SHOULD BE MAINTAINED FOR 90% VEGETATION. SEDIMENT SHOULD BE REMOVED WHEN ACCUMULATION REACH HALF THE HEIGHT OF THE BERM.	DAMAGED PORTIONS OF THE BERM SHOULD BE REBUILD IMMEDIATELY. BERM SHOULD MAINTAIN ORIGINAL DESIGN DIMENSIONS.
ENERGY DISSIPATER	WEEKLY AND AFTER EACH RAINFALL EVENT	DISPLACED PIECES WITHIN THE DISSIPATER SHALL BE REPLACED IMMEDIATELY.	DISPLACED PIECES WITHIN THE DISSIPATER SHALL BE REPLACED IMMEDIATELY. CLEAN SEDIMENT DEPOSIT IMMEDIATELY AFTER INSPECTION.
TEMPORARY PROTECTIVE FENCE	WEEKLY AND AFTER EACH RAINFALL EVENT	SHOULD BE CHECKED FOR WEAR AND TEAR AND REPLACED AS NEEDED.	DAMAGED PIECE SHOULD BE REPLACED WITHIN 24 HOURS.

EROSION AND SEDIMENT POLLUTION CONTROL NOTES

COMMONWEALTH OF PENNSYLVANIA
REGISTERED PROFESSIONAL
LILI BHATT
ENGINEER
PE089620

FILE: pw:\\gfnet-pw.bentley.com:gfnet-pw-01\Documents\Projects\61636\OUTPUTVCOMP_01\CIVIL\EROSS\SR70-E10 ESGN03.dgn
DATE: 2/3/2022 TIME: 12:32:10 PM

DISTRICT	COUNTY	ROUTE	SECTION	SHEET
12-0	WESTMORELAND	0070	E10	11 OF 135
ROSTRAVER AND SOUTH HUNTINGDON TOWNSHIPS				

REVISION NUMBER	REVISIONS	DATE	BY

TABLE A SEEDING REQUIREMENTS

FORMULA AND SPECIES	WEIGHT	MINIMUM % PURITY	MINIMUM % GERMINATION	MAXIMUM % WEED SEED	SEEDING RATE LBS. PER 1000 S.Y.
FORMULA B					44.0 TOTAL
◉ PERENNIAL RYEGRASS MIXTURE(LOLIUM PERENNE). A COMBINATION OF IMPROVED CERTIFIED VARIETIES WITH NO ONE VARIETY EXCEEDING 50% OF THE TOTAL RYEGRASS COMPONENT.	20	97	90	0.10	8.5
◉ CREEPING RED FESCUE OR CHEWINGS FESCUE (FESTUCA RUBRA OR SSP COMMUTATE)(IMPROVED AND CERTIFIED).	30	97	85	0.10	12.5
◉ KENTUCKY BLUEGRASS MIXTURE (POA PRATENSIS). A COMBINATION OF IMPROVED CERTIFIED VARIETIES WITH NO ONE VARIETY EXCEEDING 50% OF THE TOTAL BLUEGRASS COMPONENT.	45	97	80	0.15	21.0
◉ ANNUAL RYEGRASS (LOLIUM MULTIFLORUM)	5	95	90	0.10	2.0
FORMULA D CONSERVATION MIX					50.0 TOTAL
◉ TALL FESCUE (FESTUCA ARUNDINACEA VAR. KENTUCKY 31)	60	96	85	0.10	30.0
◉ CREEPING RED FESCUE OR CHEWINGS FESCUE (FESTUCA RUBRA OR SSP COMMUTATE)(IMPROVED AND CERTIFIED).	30	97	85	0.10	15.0
◉ ANNUAL RYEGRASS (LOLIUM MULTIFLORUM)	10	95	90	0.10	5.0
FORMULA E CONSERVATION MIX					10.0 TOTAL
◉ ANNUAL RYEGRASS (LOLIUM MULTIFLORUM)	100	95	90	0.10	10.0
FORMULA L MIX					48.0 TOTAL
◉ HARD FESCUE MIXTURE (FESTUCA LONGIFOLIA) A COMBINATION OF IMPROVED CERTIFIED VARIETIES WITH NO ONE VARIETY EXCEEDING 50% OF THE TOTAL HARD FESCUE COMPONENT.	55	97	85	0.10	26.4
◉ CREEPING RED FESCUE OR CHEWINGS FESCUE (FESTUCA RUBRA OR SSP COMMUTATE)(IMPROVED AND CERTIFIED).	35	97	85	0.10	16.8
◉ ANNUAL RYEGRASS (LOLIUM MULTIFLORUM)	10	95	90	0.10	4.8
FORMULA W					15.0 TOTAL
◉ TALL FESCUE (FESTUCA ARUNDINACEA VAR. KENTUCKY 31)	30	96	85	0.10	4.5
◉ BIRDSFOOT TREFOIL (LOTUS CORNICULATUS)	10	92	80*	0.10	1.5
◉ REDTOP (AGROSTIS ALBA)	10	92	80	0.20	1.5
◉ VIRGINIA WILD RYE (ELYMUS VIRGINICUS)	24	85	70	0.20	3.6
◉ TIOGA DEERTONGUE (PANICUM CLANDESTINUM)	14	95	80	0.20	2.1
◉ FOX SEDGE (CAREX VULPINODES)	12	85	60	0.20	1.8

INCLUDING HARDSEED AND NORMAL SEEDLINGS.

SEEDING APPLICATION DATES*

GENERAL. SPREAD SEEDS WHERE INDICATED AND AT THE RATES SPECIFIED IN TABLE A, OR AS OTHERWISE INDICATED. SPREAD SEEDS WITHIN THE FOLLOWING DATES, OR AS OTHERWISE INDICATED OR DIRECTED.

- ◉ FORMULA B, D & L ——— MARCH 15 TO JUNE 1; AUGUST 1 TO OCTOBER 15
- ◉ FORMULA E ——— MARCH 15 TO OCTOBER 15
- ◉ FORMULA W ——— APRIL 1 TO JUNE 15; AUGUST 16 TO SEPTEMBER 15

WHEN PROJECT CONDITIONS WARRANT, SEEDING DATES MAY BE EXTENDED. IF EXTENDED, EITHER APPLY FULL TREATMENT OR APPLY ONLY 50% OF THE PERMANENT SEEDING AND SOIL SUPPLEMENTS AND APPLY THE REMAINING 50% WITHIN THE NEXT SEEDING DATES, AS DIRECTED IN WRITING BY ENGINEER.

ON TOPSOILED AREAS, WHERE TEMPORARY SEEDING OR MULCHING HAS BEEN APPLIED, USE TILLAGE AND SOIL SUPPLEMENTS PRIOR TO PERMANENT SEEDING.

ON NONTOPSOILED AREAS, WHERE TEMPORARY SEEDING OR MULCHING HAS BEEN APPLIED, PERMANENT SEED AND/OR SOIL SUPPLEMENTS MAY BE APPLIED WITHOUT TILLING.

ALL FINISHED SLOPES SHALL BE SEEDED AND/OR MULCHED IN APPROXIMATELY 15-FOOT INCREMENTS WITH PERMANENT IN-SEASON SEEDING AS INDICATED IN THE SEEDING SCHEDULE SHOWN IN TABLE B. THIS SHALL BE DONE IMMEDIATELY AFTER GRADING IS COMPLETED, AT THE FULL APPLICATION RATES SPECIFIED FOR SEED, SOIL SUPPLEMENTS, MULCH OR OTHER STABILIZATION METHODS.

UPON COMPLETION OR TEMPORARY CESSATION OF THE EARTH DISTURBANCE ACTIVITY THAT WILL EXCEED 4 DAYS, OR ANY STAGE THEREOF, THE PROJECT SITE SHALL BE IMMEDIATELY STABILIZED WITH THE APPROPRIATE TEMPORARY OR PERMANENT STABILIZATION. DISTURBED AREAS WHICH ARE NOT AT FINISHED GRADE AND WHICH WILL BE REDISTURBED WITHIN 1 YEAR MAY BE SEEDED AND MULCHED WITH A QUICK GROWING TEMPORARY SEEDING MIXTURE AND MULCH. DISTURBED AREAS WHICH ARE EITHER AT FINISHED GRADE OR WILL NOT BE REDISTURBED WITHIN 1 YEAR MUST BE SEEDED AND MULCHED WITH A PERMANENT SEED MIXTURE AND MULCH. NOTE: HYDROSEED IS NOT CONSIDERED STABILIZATION UNTIL IT GERMINATES.

SOIL SUPPLEMENTS *

1. PULVERIZED AGRICULTURAL LIMESTONE.

   CONFORMING TO THE REQUIREMENTS OF THE AGRICULTURAL LIMING MATERIALS ACT OF 1978, P.L. 15, NO. 9, AS AMENDED; CONFORMING TO THE CURRENT STATE SPECIFICATIONS NO. L-37 FOR GROUP 1, CLASS B, TYPE MO MATERIAL.

   FURNISH MATERIAL HAVING AN EFFECTIVE NEUTRALIZING POWER OF NOT LESS THAN 64 WHEN CALCULATED, USING THE GUARANTEED CHEMICAL ANALYSIS AND FINENESS, IN ACCORDANCE WITH THE AGRICULTURAL LIMING MATERIALS RULES AND REGULATIONS (TITLE 7 PA. CODE, PART V, CHAPTER 108).

2. COMMERCIAL FERTILIZER.

   CONFORMING TO THE REQUIREMENTS OF THE PENNSYLVANIA SOIL CONDITIONER AND PLANT GROWTH SUBSTANCE LAW, ACT OF DECEMBER 1, 1977, P.L. 258, NO. 86 (3P.S.68.2), AS AMENDED.

   USE DRY FORMULATIONS OF 10-20-20 ANALYSIS FOR SEEDED AND SODDED AREAS. USE DRY FORMULATIONS OF 20-10-5 AND 16-8-16 ANALYSIS CONTROLLED RELEASE FOR TREE, SHRUB, AND VINE TYPE PLANTING OPERATIONS. USE DRY FORMULATIONS OF 19-6-12 ANALYSIS CONTROLLED RELEASE FOR HERBACEOUS WETLAND PLANTING OPERATIONS. USE OTHER ANALYSIS AS INDICATED OR SPECIFIED IN THE PROPOSAL.

   DO NOT USE LIQUID FERTILIZER FORMULATIONS FOR THE FORMULA BT-1 OR FORMULA BT-2.

SEEDING AND MULCHING NOTES

3. SLOW-RELEASE NITROGEN FERTILIZER.

CONFORMING TO THE REQUIREMENTS OF THE PENNSYLVANIA SOIL CONDITIONER AND PLANT GROWTH SUBSTANCE LAW, ACT OF DECEMBER 1, 1977, P.L.258, NO.86 (3P.S.68.2) , AS AMENDED.

USE DRY FORMULATIONS OF EITHER 38-0-0 UREAFORM, 32-0-0 TO 38-0-0 SULFUR COATED UREA, 31-0-0 IBDU, OR ANOTHER ANALYSIS AS INDICATED; AND MEETING THE FOLLOWING REQUIREMENTS:

- ◉ 38-0-0 UREAFORM ——— 38.0% MINIMUM
  - TOTAL NITROGEN (TN) ——— 25.0% MINIMUM
  - COLD WATER INSOLUBLE NITROGEN (WIN) ——— 40.0% MINIMUM
  - ACTIVITY INDEX (AI)
  - UREA NITROGEN ——— 3.5% MINIMUM
- ◉ 32-0-0 TO 38-0-0 SULFUR COATED UREA WITH A 7-DAY DISSOLUTION RANGE OF 20% TO 30%
- ◉ 31-0-0 IBDU ——— COARSE GRADE (0.7 TO 2.5MM)
- ◉ WATER INSOLUBLE NITROGEN (WIN) — 27.0% MINIMUM
- ◉ OTHER ANALYSIS AS INDICATED.

MULCHING APPLICATION RATES *

MULCHING SEEDED AREAS.

PLACE MULCH, OF THE KIND INDICATED, IMMEDIATELY AFTER SEEDING OR WITHIN 48 HOURS AFTER SEEDING IS COMPLETED. UNLESS OTHERWISE INDICATED, PLACE ONLY STRAW OR WOOD FIBER OVER TOPSOILED AREAS. USE HAY, STRAW, OR WOOD FIBER IN OTHER AREAS, AS INDICATED OR SPECIFIED.

PLACE HAY OR STRAW UNIFORMLY, IN A CONTINUOUS BLANKET, AT A MINIMUM RATE OF 1,200 POUNDS PER 1,000 SQUARE YARDS (3.0 TONS/ACRE), OR AS OTHERWISE INDICATED. IF DIRECTED, INCREASE THE RATE OF APPLICATION, DEPENDING UPON THE MATERIAL USED, SEASON, SOIL CONDITIONS, OR METHOD OF APPLICATION. AN ACCEPTABLE MECHANICAL BLOWER MAY BE USED TO APPLY MULCH. MACHINES WHICH CUT MULCH INTO SHORT PIECES WILL NOT BE PERMITTED. ANCHOR MULCH WITH SPECIFIED MULCH BINDERS APPLIED AT THE FOLLOWING RATES:

- ◉ RECYCLED CELLULOSE FIBER. 160 POUNDS PER 1,000 SQUARE YARDS
- ◉ WOOD FIBER. 160 POUNDS PER 1,000 SQUARE YARDS.
- ◉ NONASPHALTIC EMULSION. AT MANUFACTURER'S RECOMMENDED RATE
- ◉ POLYVINYL ACETATE.
- ◉ RECYCLED CELLULOSE FIBER/WOOD FIBER MIXTURE. 160 POUNDS PER 1,000 SQUARE YARDS.

APPLY WOOD FIBER MULCH HYDRAULICALLY IN ACCORDANCE WITH THE MANUFACTURER'S TANK- MIXING INSTRUCTION. IT MAY BE INCORPORATED AS AN INTEGRAL PART OF THE SLURRY AFTER THE SEED AND SOIL SUPPLEMENTS HAVE BEEN THOROUGHLY MIXED. APPLY UNIFORMLY AT THE RATE OF 320 POUNDS PER 1,000 SQUARE YARDS, UNLESS OTHERWISE INDICATED.

MULCH TEMPORARY SEEDED AREAS WITH HAY.

MULCHING PLANTED AREAS.

UNIFORMLY MULCH ENTIRE PLANT PIT BASINS, SHRUB BEDS, AND OTHER AREAS AS DIRECTED TO A LOOSE DEPTH OF 3-INCHES, OR AS INDICATED. DO NOT MULCH AREAS PLANTED WITH CROWNVETCH OR REFORESTATION AREAS.

PLACE MULCH EITHER BY HAND OR USING MECHANICAL SPREADING EQUIPMENT MANUFACTURED FOR THIS PURPOSE. TEST APPLICATION PROCEDURES TO ENSURE CONFORMANCE WITH DEPTH REQUIREMENTS. REDISTRIBUTE MULCH IN AREAS OF EXCESSIVE DEPTH. APPLY MULCH WITHIN 48 HOURS AFTER COMPLETION OF EACH PLANTED AREA.

SOIL SUPPLEMENTS APPLICATION RATES

UNIFORMLY APPLY SUPPLEMENTS TO THE AREAS TO BE SEEDED, EXCEPT AREAS TO BE SEEDED WITH FORMULA E. PROPERLY DOCUMENT BULK DELIVERY, AS SPECIFIED IN SECTION 804.2(A)2.

ON TOPSOILED AREAS, BLEND THE INITIAL SOIL SUPPLEMENTS INTO THE SOIL AT LEAST 2-INCHES, BY RAKING, DISKING, HARROWING, OR BY ANOTHER ACCEPTABLE METHOD. THE BLENDING OF THE SUPPLEMENTS INTO SOIL MAY BE PERFORMED DURING TILLAGE OPERATIONS.

PRIOR TO PROJECT COMPLETION, APPLY SLOW-RELEASE, NITROGEN FERTILIZER TO THE SURFACE OF AREAS THAT HAVE BEEN SEEDED WITH FORMULA B, D, L, W, BT1, BT-2 & SALT TOLERANT NATURALIZING MIXTURE.

APPLY SOIL SUPPLEMENTS AS FOLLOWS, UNLESS OTHERWISE INDICATED:

- PULVERIZED AGRICULTURAL LIMESTONE —— 800 POUNDS PER 1,000 S.Y.
- 10-20-20 ANALYSIS COMMERCIAL FERTILIZER ——— 140 POUNDS PER 1,000 S.Y.
- 38-0-0 UREAFORM FERTILIZER ——— 50 POUNDS PER 1,000 S.Y.
  OR
- 32-0-0 TO 38-0-0 SULFUR COATED UREA FERTILIZER ——— 59 TO 50 POUNDS PER 1,000 S.Y. AS DIRECTED
  OR
- 31-0-0 IBDU FERTILIZER ——— 61 POUNDS PER 1,000 S.Y.

ON FORMULA BT-1, BT-2 AND SALT TOLERANT NATURALING MIXTURE, APPLY 10-20-20 ANALYSIS COMMECIAL FERTILIZER AT 140 POUNDS PER 1000 SQUARE YARDS.

MULCH TYPES *

FREE FROM FOREIGN MATERIAL, COARSE STEMS, AND ANY SUBSTANCES TOXIC TO PLANT GROWTH. ALSO, FREE FROM MATURE SEED BEARING STALKS OR ROOTS OF PROHIBITED AND NOXIOUS WEEDS, BOTH AS DEFINED BY LAW.

WHEN REQUESTED, AND PRIOR TO PROJECT DELIVERY, FURNISH A CERTIFIED PHYSICAL AND CHEMICAL ANALYSIS FOR MULCHES.

USE MULCHES SEPARATELY OR, IF INDICATED, IN COMBINATION WITH WEED BARRIER MAT, AS SPECIFIED IN SECTION 808.2(Q), BUT DO NOT USE CRUSHED AGGREGATE WITH WEED BARRIER MAT.

1. SEEDED AREAS.
   EITHER ONE OR A COMBINATION OF THE FOLLOWING, AS SPECIFIED:

1.A HAY.
   TIMOTHY HAY, MIXED CLOVER AND TIMOTHY HAY, OR OTHER ACCEPTABLE NATIVE OR FORAGE GRASSES, WELL- CURED TO LESS THAN 20% MOISTURE CONTENT, BY WEIGHT.

1.B STRAW.
   EITHER WHEAT OR OAT STRAW, REASONABLY FREE OF VIABLE SEED, WELL CURED TO LESS THAN 20% MOISTURE CONTENT, BY WEIGHT.

MULCH CONTROL NETTING *

1. PLASTIC.
   A UNIFORMLY EXTRUDED, RECTANGULAR, PLASTIC MESH MEETING THE FOLLOWING REQUIREMENTS:
   - ◉ COLOR ——— BLACK, GREEN OR CLEAR
   - ◉ WEIGHT ——— 0.23 OUNCE PER SQUARE YARD, MINIMUM
   - ◉ MESH OPENING ——— NOMINAL 3/4-INCH X 3/4-INCH
2. COCONUT COIR.
   UNDYED, BIODEGRADABLE COCONUT COIR YARN WOVEN INTO A MESH MEETING THE FOLLOWING REQUIREMENTS
   - ◉ WEIGHT ——— 6 OUNCES PER SQUARE YARD, MINIMUM
   - ◉ MESH OPENING ——— NOMINAL 2-INCH X 2-INCH

* FOR INFORMATION ONLY

THE CONTRACTOR WILL BE RESPONSIBLE FOR THE PROPER CONSTRUCTION, STABILIZATION AND MAINTENANCE OF ALL EROSION AND SEDIMENTATION CONTROLS AND RELATED ITEMS INCLUDED IN THIS PERMIT.

SEEDING AND MULCHING NOTES

STRAW. THIS MATERIAL IS ONE OF THE BEST PREFERRED AND ONE OF THE LEAST EXPENSIVE MULCHES FOR MOST SEEDING OPERATIONS. USE ON ALL TOPSIOLED AREAS. STRAW NEEDS TO BE SECURED IN PLACE WITH EITHER APPROVED MULCH CONTROL BINDERS OR MULCH CONTROL NETTING TO PREVENT LOSS OF MATERIAL BY NATURAL WINDS OR BREEZES CAUSED BY VEHICULAR MOVEMENT.

HAY. THIS IS MORE APT TO INTRODUCE UNDESIRABLE WEED SEEDS BUT IS MORE ADAPTABLE TO STEEPER SLOPE CONDITIONS THAN STRAW. MAY HAVE WIDE USE IN WILDLIFE HABITAT AREA DEVELOPMENT TO INTRODUCE MORE DIVERSE PLANT TYPES. USE ON UNTOPSOILED AREAS.

* FOR INFORMATION ONLY
THE CONTRACTOR WILL BE RESPONSIBLE FOR THE PROPER CONSTRUCTION, STABILIZATION AND MAINTENANCE OF ALL EROSION AND SEDIMENTATION CONTROLS AND RELATED ITEMS INCLUDED IN THIS PERMIT.

EROSION AND SEDIMENT POLLUTION CONTROL NOTES

COMMONWEALTH OF PENNSYLVANIA — REGISTERED PROFESSIONAL ENGINEER — LILI BHATT — PE089620

FILE: pw:\\rpr-pw.ben1.qcm.com:rpr-pw-01\Documents\Projects\61636\OUTPUT\COMP_01\C1VIL\EROSSSR70-E10 ESGN04.dgn
DATE: 7/22/2022 TIME: 12:32:12 PM

DISTRICT	COUNTY	ROUTE	SECTION	SHEET
12-0	WESTMORELAND	0070	E10	12 OF 135
ROSTRAVER AND SOUTH HUNTINGDON TOWNSHIPS				

REVISION NUMBER	REVISIONS	DATE	BY

SEQUENCE OF CONSTRUCTION

ALL EARTH DISTURBANCE ACTIVITIES SHALL PROCEED IN ACCORDANCE WITH THE FOLLOWING SEQUENCE, UNLESS OTHERWISE SPECIFIED BY THE CONTRACT DOCUMENTS OR PERMITTING REQUIREMENTS. WHERE SPECIFIED IN THE SEQUENCE, SELECT STAGES MAY OCCUR SIMULTANEOUSLY OR IN NUMERIC ORDER AS DESCRIBED BELOW.

PRE-CONSTRUCTION

AT LEAST SEVEN (7) DAYS BEFORE STARTING ANY EARTH DISTURBANCE ACTIVITY, THE OWNER SHALL INVITE ALL CONTRACTORS INVOLVED IN THAT ACTIVITY, THE LANDOWNER, ALL APPROPRIATE OFFICIALS, THE EROSION AND SEDIMENT CONTROL (E&S) PLAN DESIGNER AND THE WESTMORELAND CONSERVATION DISTRICT (WCD) TO A PRE-CONSTRUCTION MEETING.

AT LEAST THREE (3) DAYS BEFORE STARTING ANY EARTH DISTURBANCE ACTIVITY, ALL CONTRACTORS INVOLVED IN THAT ACTIVITY SHALL NOTIFY THE PENNSYLVANIA ONE-CALL SYSTEM AT 1-800-242-1776 TO DETERMINE ANY UNDERGROUND UTILITY LOCATIONS.

ALTERNATIVES TO THE STAGING OR SPECIFICATIONS AS PROVIDED IN THE APPROVED PLANS MUST FIRST BE APPROVED BY THE WESTMORELAND CONSERVATION DISTRICT PRIOR TO IMPLEMENTATION. IT IS RESPONSIBILITY OF THE SELECTED CONTRACTOR TO HAVE ALL PROPOSED CHANGES TO THE E&S PLAN DOCUMENTED AND COORDINATED WITH THE WESTMORELAND CONSERVATION DISTRICT.

ALL CHANNELS MUST BE CONSTRUCTED FROM DOWNSTREAM TO UPSTREAM. CHANNEL LINING SHOULD BE INSTALLED AND SEEDED IMMEDIATELY PER THE DETAIL PROVIDED.

CONSTRUCTION OF CROSS PIPES AND PIPE RUNS MUST BE CONSTRUCTED FROM DOWNSLOPE TO UPSLOPE UNLESS OTHERWISE NOTED FOR ANY STAGE. CONSTRUCT TEMPORARY CONNECTIONS BETWEEN THE NEWLY CONSTRUCTED INLETS AND EXISTING CROSS PIPES AS REQUIRED. MAINTAIN POSITIVE FLOW AT ALL TIMES FOR BOTH EXISTING AND PROPOSED PIPE RUNS. PLACE INLET PROTECTION ON NEW AND EXISTING INLETS AS INDICATED ON THE PLANS.

REMOVE EXISTING INLETS AND PIPES SIMULTANEOUSLY AS PROPOSED DRAINAGE SYSTEM IS BUILT AT ANY LOCATION UNLESS OTHERWISE NOTED IN ANY STAGE.

A ROCK CONSTRUCTION ENTRANCE MUST BE CONSTRUCTED AND UTILIZED BY ALL VEHICLES AND EQUIPMENT TO ENTER AND EXIT OUTSIDE THE PAVEMENT LIMITS. ROCK CONSTRUCTION ENTRANCES NOT DISPLAYED ON PLANS SHOULD BE INSTALLED IN CONSULTATION AND AS DIRECTED BY THE REPRESENTATIVE IN CHARGE.

THE RESULTS OF THE PHASE III ESA INVESTIGATIONS WILL DETERMINE IF PROJECT EXCAVATIONS WILL POTENTIALLY ENCOUNTER MATERIAL THAT EXCEEDS PA CLEAN FILL LIMITS AT SPECIFIC LOCATIONS. THE PROJECT CONSTRUCTION DOCUMENTS WILL INCLUDE ITEMS OF WORK AND SPECIAL PROVISIONS THAT THE CONTRACTOR MUST FOLLOW REGARDING THE PHASE III SITES INVESTIGATION RESULTS. THE PROJECT INCLUDES DESIGNATED WASTE AREAS IN THE WESTERN SIDE OF THE INTERCHANGE THAT ARE ONLY TO BE UTILIZED FOR THE PLACEMENT OF SLAG MATERIAL EXCAVATED WITHIN THE PROJECT LIMITS AND SUBJECT TO THE RESULTS OF THE PHASE III INVESTIGATION AND SPECIAL PROVISIONS PROVIDED IN THE CONTRACT DOCUMENT.

FOR ALL INLET PROTECTION, EXTEND BERM OVER CURB AS SHOWN IN THE INLET PROTECTION DETAIL IF FLOW IS NOT CAPTURED BY INLET AND RUNOFF BYPASSES THE INLET PROTECTION.
DELINEATE THE LIMIT OF DISTURBANCE FOR THE PROJECT AREA.

STAGE 1

INCLUDES CONSTRUCTION OF TEMPORARY AND PERMANENT PAVEMENT ALONG WESTERN END ALONG SR 0070 FROM STA 265+ 75 TO STA 306+05, STAGE 1 WORK FOLLOWS THE WORK DETAILED IN PHASE 1A-1F OF TRAFFIC CONTROL PLAN (TCP).

PRIOR TO REMOVING/PLACING ANY PAVEMENT FROM SR 0070, CONSTRUCT ROCK CONSTRUCTION ENTRANCES (RCE) AND INSTALL COMPOST FILTER SOCK TO PREPARE FOR THE "DESIGNATED PROJECT WASTE AREA" AT EXISTING RAMP E AS SHOWN IN PLANS.

SR 0070

PHASE 1A

THIS INCLUDES REMOVAL EXISTING CONCRETE BARRIER AND PLACEMENT TEMPORARY PAVEMENT IN THE EXISTING MEDIAN FROM STA 265+75 TO STA 306+65 IN ACCORDANCE WITH THE TCP PHASE 1A PLANS.

1) JACK AND BORE THE FOLLOWING PIPES UNDER SR 0070: 48"PIPE AT STA 281+13, 30" PIPE AT STA 288+25 AND 36" PIPE AT STA 294+50. UTILIZE THE PUMP BYPASS TO MAINTAIN FLOW IN EXISTING PIPE DURING CONSTRUCTION. INSTALL INLETS, MANHOLES, HEADWALL, CONNECTING CHANNEL AND ROCK APRONS AS SHOWN. IMMEDIATELY STABILIZE THE DISTURBED AREA WITH SEED, MULCH AND ROLLED EROSION CONTROL PRODUCT (RECP).

PHASE 1B

THIS INCLUDES REBUILDING EXISTING SHOULDER AND TEMPORARY PAVEMENT WIDENING ALONG SR 0070 EB FROM STA 269+40 TO STA 297+60 IN ACCORDANCE WITH THE TCP PHASE 1B PLANS.

1) CONSTRUCT THE ROCK CONSTRUCTION ENTRANCES (RCE) FROM FINLEY ROAD AND ALONG SMITH DRIVE. COMMENCE CLEARING AND GRUBBING ACTIVITIES ASSOCIATED WITH CONSTRUCTION OF TRAP 1 AND TRAP 2.
2) INSTALL COMPOST FILTER SOCK AT TRAP 1 LOCATION AS SHOWN. CONSTRUCT TEMPORARY DIVERSION BERM ALONG TRAP 2 AS INDICATED IN PLAN. IMMEDIATELY STABILIZE THE DIVERSION BERM WITH RECP AS SHOWN IN DETAIL.
3) CONSTRUCT OUTLET PIPE, OUTLET STRUCTURE AND TRAP 1 AS SHOWN ON PLANS AND DETAILS. IMMEDIATELY STABILIZE THE DISTURBED AREA WITH SEED, MULCH AND RECP.
4) CONSTRUCT TEMPORARY OUTLET PIPE, OUTLET STRUCTURE AND TRAP 2 AS SHOWN ON PLANS AND DETAILS. IMMEDIATELY STABILIZE THE DISTURBED AREA WITH SEED, MULCH AND RECP.
5) CONSTRUCT THE RCE ALONG SR 0070 EB FOR REBUILDING EXISTING SHOULDER AND TEMPORARY PAVEMENT WIDENING ALONG SR 0070 EB FROM STA 269+40 TO STA 297+60.CONSTRUCT CFS TRAP 4 AND 11 AS SHOWN IN THE PLANS.
6) CONSTRUCT DRAINAGE SYSTEM INCLUDING ROADSIDE SWALE, PIPES, INLETS AND MANHOLE ALONG SR 0070 EB FROM 70-A3 TO 70-A17 AND CONNECT TO TRAP 1. TEMPORARILY ADJUST THE PROPOSED INLET GRADES AND SWALE GRADING TO MATCH THE TEMPORARY PAVEMENT ELEVATIONS AS INDICATED IN TCP PLANS. USE TEMPORARY PIPES TO CONNECT THE EXISTING INLETS TO THE PROPOSED INLETS TO PROVIDE POSITIVE FLOW AS SHOWN IN PLANS. CAP AND ADJUST GRADE ELEVATIONS OF EXISTING INLETS TO REMAIN PER TCP PLANS. IMMEDIATELY STABILIZE THE DISTURBED AREA WITH SEED, MULCH AND RECP.
7) INSTALL INLET PROTECTION TO THE EXISTING INLETS AS SHOWN IN PLANS. CONSTRUCT ROADSIDE SWALE ALONG SR 0070 EB FROM STA 283+00 TO STA 288+25 AND STA 288+50 TO STA 294+40, INSTALL ROCK FILTER AND WEIGHTED SEDIMENT FILTER TUBE AS SHOWN IN PLANS. CAP AND ADJUST GRADE ELEVATIONS OF EXISTING INLETS TO REMAIN PER TCP PLANS. IMMEDIATELY STABILIZE THE DISTURBED AREA WITH SEED, MULCH AND RECP.
8) REBUILD EXISTING SHOULDER AND CONSTRUCT TEMPORARY PAVEMENT WIDENING ALONG SR 0070 EB FROM STA 269+40 TO STA 297+60, IN ACCORDANCE WITH TCP PHASE 1B PLANS.

PHASE 1C

THIS INCLUDES SHOULDER RECONSTRUCTION, TEMPORARY AND PERMANENT PAVEMENT WORK ALONG SR 0070 WB STA 266+30 TO 306+10 IN ACCORDANCE WITH TCP PHASE 1C PLANS.

1) INSTALL RCE'S AND CLEAR AND GRUB THE AREA NEEDED TO CONSTRUCT THE DIVERSION BERM. CONSTRUCT TEMPORARY DIVERSION BERM AS INDICATED IN PLAN. IMMEDIATELY STABILIZE THE DIVERSION BERM WITH RECP AS SHOWN IN DETAIL. ADD INLET PROTECTION TO THE EXISTING INLETS AND WEIGHTED SEDIMENT FILTER TUBE AS SHOWN IN PLANS. ADD TEMPORARY INLET AND INLET PROTECTION TO THE EXISTING DRAINAGE STRUCTURE AT SR 0070 302+53 LT.
2) CLEAR AND GRUB THE REMAINING AREA. CONSTRUCT PERMANENT DRAINAGE SYSTEM INCLUDING ROADSIDE EMBANKMENT, ROADSIDE SWALE, PIPES AND INLETS ALONG SR 0070 WB FROM 70-B1 TO 70-B10 TO CONNECT TO MANHOLE 70-B12, ADD INLET PROTECTION TO PROPOSED INLETS AS SHOWN IN PLANS. CONSTRUCT PERMANENT DRAINAGE SYSTEM INCLUDING ROADSIDE SWALE, PIPES AND INLETS ALONG SR 0070 WB FROM 70-C1 TO 70-C5 TO CONNECT TO INLET 70-C6, ADD INLET PROTECTION TO PROPOSED INLETS AS SHOWN IN PLANS. CONSTRUCT PERMANENT DRAINAGE SYSTEM INCLUDING ROADSIDE SWALE, PIPES AND INLETS ALONG SR 0070 WB FROM 70-D3 TO 70-D8, USE 24" TEMP PIPE TO CONNECT THIS SYSTEM TO TRAP 2 AS SHOWN IN PLANS. IMMEDIATELY STABILIZE THE DISTURBED AREA WITH SEED, MULCH AND RECP.
3) CONSTRUCT PORTIONS OF PERMANENT AND TEMPORARY PAVEMENT ALONG SR 0070 WB IN ACCORDANCE WITH THE TCP PHASE 1C PLANS AND CONSTRUCTION PLANS.

PHASE 1D

1) CONSTRUCT PORTIONS OF PERMANENT AND TEMPORARY PAVEMENT ALONG SR 0070 WB FROM STA 274+65 TO STA 276+75 AND STA 293+75 TO 296+00 IN ACCORDANCE WITH THE TCP PHASE 1C PLANS.

PHASE 1E

THIS INCLUDES THE CONSTRUCTION OF THE PERMANENT AND TEMPORARY PAVEMENT ALONG EASTBOUND STA 270+75 TO 296+00.

1) CONSTRUCT THE RCE. INSTALL ROCK BARRIER AND WEIGHTED SEDIMENT FILTER TUBE AS INDICATED IN THE PLANS.
2) FINAL GRADE THE SWALE ON EASTBOUND SR 0070 AND ADJUST INLET TOPS TO MATCH THE FINAL TOP OF GRADE ELEVATION PER CONSTRUCTION PLANS. IMMEDIATELY STABILIZE THE DISTURBED AREA WITH SEED, MULCH AND RECP.
3) CONSTRUCT PERMANENT AND TEMPORARY PAVEMENT ALONG SR 0070 FROM STA 274+65 TO STA 296+00, LT/RT IN ACCORDANCE WITH THE TCP PHASE 1 E PLANS AND CONSTRUCTION PLANS.

PHASE 1F

THIS INCLUDES CONSTRUCTION ALONG SR 0070 WB FROM STA 268+80 TO STA 287+00 AS INDICATED IN TCP PHASE 1F PLANS.

1) CONSTRUCT THE RCE.
2) REMOVE THE PORTION OF TEMPORARY PAVEMENT ALONG SR 0070 WB FROM STA 268+80 TO STA 287+00 AS INDICATED IN TCP PHASE 1F PLANS. FINAL GRADE THE ROADSIDE SWALE AND ADJUST INLET TOPS TO FINAL TOP OF GRADE ELEVATION PER CONSTRUCTION PLANS. IMMEDIATELY STABILIZE THE DISTURBED AREA WITH SEED, MULCH AND RECP.

EROSION AND SEDIMENT POLLUTION CONTROL
CONSTRUCTION SEQUENCE

COMMONWEALTH OF PENNSYLVANIA
REGISTERED PROFESSIONAL
LILI BHATT
ENGINEER
PE089620

FILE: pw:\\dfnet-pw.ben1.bv.com:dfnet-pw-01\Documents\Projects\61636\OUTPUT\COMP_01\CIVIL\EROSS\SR70-E10 ESGN05.dgn
DATE: 2/3/2022 TIME: 12:32:15 PM

DISTRICT	COUNTY	ROUTE	SECTION	SHEET
12-0	WESTMORELAND	0070	E10	13 OF 135
ROSTRAVER AND SOUTH HUNTINGDON TOWNSHIPS				

REVISION NUMBER	REVISIONS	DATE	BY

GOLF COURSE TUNNEL EXTENSION

FOLLOWING CONSTRUCTION WORK CAN BE CARRIED OUT ANY TIME DURING WINTER MONTHS AS A PART OF PHASE 1 OR 2.

1) CONSTRUCT THE RCE AS SHOWN IN THE PLANS.
2) DURING THE DRY WEATHER CONDITION, CONSTRUCT GOLF COURSE TUNNEL EXTENSION AND REHABILITATION (SR 0070 STA 324+76.77) ACCORDING TO THE STRUCTURE PLANS. UTILIZE THE PUMP BYPASS AS NEEDED DURING CONSTRUCTION.

MAINTAIN ALL BMPS THROUGHOUT EACH PHASE OF THE CONSTRUCTION OR UNTIL NOTICE IS GIVEN BY THE REPRESENTATIVE IN CHARGE. ONCE AREA IS STABILIZED AND PRIOR TO REMOVING E&S BMPS, SCHEDULE SITE INSPECTION BY WESTMORELAND CONSERVATION DISTRICT.

UPON APPROVAL BY CONSERVATION DISTRICT, CONVERT TRAP 1 TO SWM BASIN 1 AND ADD UNDERDRAINS PER THE CONSTRUCTION PLANS. ANY DISTURBED AREA MUST BE IMMEDIATELY REPAIRED AND PERMANENTLY STABILIZED. CONVERSION OF SEDIMENT TRAP TO SWM BASIN IS CRITICAL STAGE OF CONSTRUCTION AND NEED TO BE OVERSIGHTED BY THE LICENSED PROFESSIONAL.

WHEN REMOVAL OF E&S BMPS IS APPROVED BY WESTMORELAND CONSERVATION DISTRICT, REMOVE ALL E&S BMPS NOT TO BE USED IN FUTURE STAGES.

ALL AREAS DISTURBED BY REMOVAL OF BMPS OR TEMPORARY FACILITIES MUST BE IMMEDIATELY REPAIRED AND PERMANENTLY STABILIZED.

STAGE 2

INCLUDES CONSTRUCTION OF TEMPORARY PAVEMENT ALONG SR 0070 MEDIAN, TEMPORARY PAVEMENT ON MEDIAN AND SHOULDER ALONG SR 0051, CONSTRUCTION OF RELOCATED FINLEY ROAD, CONSTRUCTION OF SMITH ROAD, CONSTRUCTION OF NEW SR 0051 EASTERN BRIDGE AND CONSTRUCTION OF W&LE RAILROAD AND DITCHES ASSOCIATED WITH RAILROAD.

CONSTRUCTION ACTIVITIES ASSOCIATED WITH FOUNDATION GROUND IMPROVEMENT AREA THAT DIRECTLY IMPACTS THE OTHER WORK NEEDS TO BE CARRIED OUT BEFORE OTHER STAGE 2 WORK. UTILITY RELOCATION ACTIVITIES ALONG W&LE RAILROAD AREA NEEDS TO BE STARTED EARLY IN STAGE 2.

CONSTRUCTION ACTIVITIES FOR SR 0070, SR 0051, SMITH ROAD AND FINLEY ROAD CAN BE CARRIED OUT SIMULTANEOUSLY UNLESS OTHERWISE NOTED, STAGE 2 WORK FOLLOWS THE WORK DETAILED IN PHASE 2A-2C OF TRAFFIC CONTROL PLAN (TCP).

FOUNDATION GROUND IMPROVEMENT AREAS

1) CONSTRUCT THE RCE FOR FOUNDATION GROUND IMPROVEMENT AREAS AS SHOWN IN PLANS.
2) INSTALL COMPOST FILTER SOCK AND ROCK FILTER AS SHOWN IN PLANS.
3) COMMENCE CLEARING AND GRUBBING ACTIVITIES ASSOCIATED WITH FOUNDATION GROUND IMPROVEMENT AREAS.
4) JACK AND BORE THE FOLLOWING PIPES UNDER SR 0051: 24" PIPE AT STA 802+50 AND 24" PIPE AT 805+00. INSTALL TEMPORARY PIPE AS SHOWN. REGRADE THE UPSTREAM AREA TO PROVIDE FLOW TOWARDS 70-G1 AND 70-G3. IMMEDIATELY STABILIZE THE DISTURBED AREA WITH SEED, MULCH AND RECP.
5) CARRY OUT FOUNDATION GROUND IMPROVEMENT WORK ACCORDING TO GEOTECHNICAL ENGINEERING PLANS DEVELOPED BY THE CONTRACTOR.

W&LE RAILROAD

1) INSTALL RCE AS SHOWN IN PLANS. CONSTRUCT TEMPORARY ACCESS FROM SR 0051 TO CEDAR CREEK AS SHOWN IN PLAN.
2) CONSTRUCT CROSS PIPE AT STA 783+60 INCLUDING PIPES, INLETS AND OUTLET STRUCTURE FROM 51-A19 TO 51-A30. CONSTRUCT TOE OF FILL DITCH FROM STA. 5028+43 TO 5031+26, LT. INSTALL WEIGHTED SEDIMENT FILTER TUBE AS INDICATED. IMMEDIATELY STABILIZE THE DISTURBED AREA WITH SEED, MULCH AND RECP.
3) CONSTRUCT INLET 51-A26 AND PIPE TO CONNECT TO INLET 51-A29. USE TEMPORARY 18" PIPE TO CONNECT EXISTING INLET AT STA.783+32, LT. TO INLET 51-A26 AS SHOWN IN PLANS. UTILIZE THE PUMP BYPASS TO MAINTAIN FLOW TO THE EXISTING INLET DURING CONSTRUCTION.
4) CONSTRUCT SANITARY SEWER RELOCATION AND EXTENSION WORK ASSOCIATED WITH THE RAILROAD BRIDGE AND EMBANKMENTS (REFER TO SEPARATE PLAN FOR E&S MEASURES).
5) INSTALL INLET PROTECTION AS INDICATED IN THE PLANS.
6) INSTALL TEMPORARY SHORING AND BEGIN CONSTRUCTION OF THE WESTERN BRIDGE ABUTMENT.
7) INSTALL TEMPORARY SHORING AND BEGIN CONSTRUCTION OF THE EASTERN BRIDGE ABUTMENT.
8) INSTALL PROTECTIVE FENCE AROUND THE WETLAND AREA ADJACENT TO 5037+30, RT AS SHOWN IN E&S PLANS. INSTALL COMPOST FILTER SOCK AS SHOWN ON PLANS.

SEQUENCE OF CONSTRUCTION

9) CONSTRUCT HEADWALL AND PIPE AT 51-A20.
10) CONSTRUCT TOE OF FILL DITCH FROM STA. 5032+52 TO 5036+85, LT. IMMEDIATELY STABILIZE THE DISTURBED AREA WITH SEED, MULCH AND RECP.
11) ONCE DITCH IS STABILIZED FROM STA. 5032+52 TO 5036+85, LT BEGIN CONSTRUCTION OF EMBANKMENT. IMMEDIATELY STABILIZE THE DISTURBED AREA WITH SEED, MULCH AND RECP.
12) CONSTRUCT TEMPORARY STREAM CROSSING AT CEDAR CREEK AS SHOWN IN "CULVERT EXTENSION W&LE RAILROAD" DETAIL.
13) BEGIN CONSTRUCTION OF CULVERT EXTENSION PER THE STRUCTURE PLANS.
14) ONCE CULVERT EXTENSION IS CONSTRUCTED, CONSTRUCT 24" TEMP PIPE AS SHOWN IN PLANS TO PROVIDE THE POSITIVE FLOW OUT OF THE AREA BETWEEN EXISTING AND PROPOSED TRACKS. BEGIN CONSTRUCTION OF EMBANKMENT FROM STA. 5025+00 TO THE BRIDGE. INSTALL COMPOST FILTER SOCK AS INDICATED IN PLANS. IMMEDIATELY STABILIZE THE DISTURBED AREA WITH SEED, MULCH AND RECP.
15) CONSTRUCT THE DITCH FROM 5018+60 TO 5025+00, LT AND INSTALL ROCK FILTER AS SHOWN IN THE PLANS. IMMEDIATELY STABILIZE THE DISTURBED AREA WITH SEED, MULCH AND RECP.
16) ONCE BRIDGE ABUTMENTS ARE COMPLETED, CONSTRUCT BRIDGE AND COMPLETE CONSTRUCTION OF THE EMBANKMENTS UP TO THE TOP OF SUBBALLAST. INSTALL COMPOST FILTER SOCK RUN AT EVERY 15" VERTICAL INCREMENT TO CONTROL THE SEDIMENT RUNOFF AS SHOWN IN PLANS. USE PUMP BYPASS AS NEEDED. IMMEDIATELY STABILIZE THE DISTURBED AREA WITH SEED, MULCH AND RECP.
17) WHEELING & LAKE ERIE RAILROAD CONTRACTOR WILL CONSTRUCT BALLAST AND RAILS.
18) REMOVE UPSTREAM END OF THE CULVERT AND INSTALL PARALLEL/SLOPE DITCHES DOWN TO CEDAR CREEK FROM STA. 5022+00 TO 5031+56, RT. INSTALL WEIGHTED SEDIMENT FILTER TUBE AND CFS TRAP 5 AND 6 AS INDICATED. IMMEDIATELY STABILIZE THE DISTURBED AREA WITH SEED, MULCH AND RECP.
19) MAINTAIN ALL BMPS THROUGHOUT EACH PHASE OF THE CONSTRUCTION OR UNTIL NOTICE IS GIVEN BY THE REPRESENTATIVE IN CHARGE. ONCE AREA IS STABILIZED AND PRIOR TO REMOVING E&S BMPS, SCHEDULE SITE INSPECTION BY WESTMORELAND CONSERVATION DISTRICT.
20) WHEN REMOVAL OF E&S FEATURES IS APPROVED BY WESTMORELAND CONSERVATION DISTRICT, REMOVE ALL E&S FEATURES NOT TO BE USED IN FUTURE STAGES.
21) ALL AREAS DISTURBED BY REMOVAL OF BMPS OF TEMPORARY FACILITIES MUST BE IMMEDIATELY REPAIRED AND PERMANENTLY STABILIZED.

SR 0070

1) REMOVE EXISTING BARRIER AND CONSTRUCT TEMPORARY PAVEMENT ALONG SR 0070 MEDIAN BETWEEN STA 306+65 AND STA 352+50 AS SHOWN IN TCP PHASE 2A PLANS.
2) RECONSTRUCT EXISTING EASTBOUND SHOULDER WITH TEMPORARY PAVEMENT FROM STA 297+60 TO STA 364+48 RT IN ACCORDANCE WITH THE TCP STAGE 2B PLANS. LAYOUT E&S CONTROL REQUIRED FOR THIS WORK AS SHOWN IN THE PLANS. SEED AND STABILIZE THE DISTURBED AREA IMMEDIATELY.
3) CONSTRUCTION OF DRAINAGE SYSTEM AND SLOPE EXCAVATION BETWEEN STA 325+00 TO STA 366+80, LT. AND RT.
   A. CONSTRUCT THE RCE'S AS SHOWN IN STAGE 2 PLANS.
   B. CONSTRUCT TEMPORARY EARTHEN EMBANKMENT AS INDICATED IN PLAN. ADD RECP AS SHOWN IN DETAIL AND STABILIZE THE DIVERSION BERM.
   C. COMMENCE CLEARING AND GRUBBING ACTIVITIES ASSOCIATED WITH CONSTRUCTION.
   D. JACK AND BORE 36" PIPE UNDER SR 0070 AT STA 356+03. UTILIZE THE PUMP BYPASS TO MAINTAIN FLOW DURING CONSTRUCTION. INSTALL INLETS, MANHOLES AND ROCK APRONS AS SHOWN. IMMEDIATELY STABILIZE THE DISTURBED AREA WITH SEED, MULCH AND RECP .
   E. AFTER CROSS PIPE IS CONSTRUCTED, BEGIN CONSTRUCTION OF SLOPE EXCAVATION AND DRAINAGE SYSTEMS INCLUDING ROADSIDE SWALE, PIPES, MANHOLES AND INLETS FROM STA 325+00 TO STA 366+80 RT, IN ACCORDANCE WITH THE CONSTRUCTION PLAN.
   F. CONNECT FLOW FROM THE ROADSIDE SWALE TO THE EXISTING CROSS PIPE AT STA 334+33 AND STA 338+44 IN TEMPORARY CONDITION. IMMEDIATELY STABILIZE THE DISTURBED AREA WITH SEED, MULCH AND RECP .
   G. ADD INLET PROTECTION TO EXISTING INLETS AS SHOWN IN PLANS BETWEEN STA 356+00 TO 366+80 RT. BEGIN CONSTRUCTION OF SLOPE EXCAVATION, CONSTRUCT DRAINAGE SYSTEMS INCLUDING ROADSIDE SWALE, PIPES,MANHOLES, OUTFALL AND INLETS FROM STA 356+00 TO STA 366+80, RT TO OUTLET TO THE YOUGHIOGHENY RIVER, IN ACCORDANCE WITH THE CONSTRUCTION PLAN. IMMEDIATELY STABILIZE THE DISTURBED AREA WITH SEED, MULCH AND RECP. ADD INLET PROTECTION TO THE PROPOSED INLETS.
   H. THIS WORK CAN CONTINUE IN STAGE 3, IF NEEDED
4) CONSTRUCTION OF W. MCCLAIN DRIVE, DRAINAGE SYSTEM AND SLOPE EXCAVATION BETWEEN STA 347+00 TO STA 366+80, LT.
   A. INSTALL THE RCE, COMPOST FILTER SOCK, CFS TRAP7 AND WEIGHTED SEDIMENT FILTER TUBE AS SHOWN IN PLANS.
   B. COMMENCE CLEARING AND GRUBBING ACTIVITIES ASSOCIATED WITH CONSTRUCTION.
   C. CONSTRUCT THE CULVERT EXTENSION OVER UNKNOWN TRIBUTARY (SR 0070 STA 355+15) PER DETAIL PROVIDED AND IN ACCORDANCE TO THE STRUCTURE PLANS.
   D. CONSTRUCT SWM BASIN 10 INCLUDING OUTLET STRUCTURE AS SHOWN IN CONSTRUCTION PLANS. CONTRUCT TEMPORARY OUTLET, OUTLET STRUCTURE AND TRAP 8 AS SHOWN IN PLANS AND DETAILS. IMMEDIATELY STABILIZE THE DISTURBED AREA WITH SEED, MULCH AND RECP. SWM BASIN CONSTRUCTION IS CRITICAL STAGE AND NEED TO BE OVERSIGHTED BY THE LICENSED PROFESSIONAL.
   E. CONSTRUCT PRIVATE DRIVEWAY FROM STA 90+00 TO STA 106+37 IN ACCORDANCE WITH THE CONSTRUCTION PLAN. ADD WATER BAR AS INDICATED IN PLANS.
   F. ADD INLET PROTECTION TO EXISTING INLETS AS SHOWN IN PLANS BETWEEN STA 356+00 TO 366+80 LT. BEGIN CONSTRUCTION OF SLOPE EXCAVATION. CONSTRUCT DRAINAGE SYSTEMS INCLUDING ROADSIDE SWALE, PIPES, MANHOLES, OUTFALL AND INLETS FROM STA 356+00 TO STA 366+80, LT TO THE YOUGHIOGHENY RIVER, IN ACCORDANCE WITH THE CONSTRUCTION PLAN. IMMEDIATELY STABILIZE THE DISTURBED AREA WITH SEED, MULCH AND RECP. ADD INLET PROTECTION TO THE PROPOSED INLETS.
   G. CONSTRUCT W. MCCLAIN ROAD FROM STA 802+95 TO STA 804+00 INCLUDING CUL-DE-SAC IN ACCORDANCE WITH THE CONSTRUCTION PLAN.
5) MAINTAIN ALL BMPS THROUGHOUT EACH PHASE OF THECONSTRUCTION OR UNTIL NOTICE IS GIVEN BY THE REPRESENTATIVE IN CHARGE. ONCE AREA ISSTABILIZED AND PRIOR TO REMOVING E&S BMPS, SCHEDULE SITE INSPECTION BY WESTMORELAND CONSERVATION DISTRICT.
6) WHEN REMOVAL OF E&S FEATURES IS APPROVED BY WESTMORELAND CONSERVATION DISTRICT, REMOVE ALL E&S FEATURES NOT TO BE USED IN FUTURE STAGES.
7) ALL AREAS DISTURBED BY REMOVAL OF BMPS OF TEMPORARY FACILITIES MUST BE IMMEDIATELY REPAIRED AND PERMANENTLY STABILIZED.

SR 0051

1) CONSTRUCT THE RCE FOR SR 0051 AS SHOWN IN PLANS. INSTALL COMPOST FILTER SOCK, INLET PROTECTION AND ROCK FILTER AS SHOWN.
2) COMMENCE CLEARING AND GRUBBING ACTIVITIES ASSOCIATED WITH CONSTRUCTION OF TEMPORARY RAMPS AND SR 0051 EASTERN BRIDGE.
3) CONSTRUCT TEMPORARY PIPES AT STA 807+50 TO 810+50, LT AND STA 798+50 TO 799+50, LT AS SHOWN IN PLAN. IMMEDIATELY STABILIZE THE DISTURBED AREA WITH SEED, MULCH AND RECP.
4) CONSTRUCT TEMP RAMPS C-1, G-1, A-1 AND E-1 IN ACCORDANCE WITH THE TCP PHASE 2 PLANS. CUT THE TEMP PIPE BETWEEN TEMP RAMPS E-1 AND A-1 TO DRAIN OUT THE AREA WHILE MAINTAINING THE POSITIVE FLOW.
5) RECONSTRUCT THE EXISTING SOUTHBOUND SR 0051 SHOULDER IN ACCORDANCE WITH THE TCP PHASE 2 PLANS. IMMEDIATELY STABILIZE THE DISTURBED AREA WITH SEED, MULCH AND RECP.
6) CONSTRUCT THE PROPOSED CHANNEL OUTLETTING TO CEDAR CREEK AT STA 824+60 LT. IMMEDIATELY STABILIZE THE PROPOSED CHANNEL WITH SEED, MULCH AND RECP AS NOTED IN PLANS, ADD ROCK FILTER AS SHOWN ON PLANS. CONSTRUCT THE PROPOSED DRAINAGE SYSTEM INCLUDING INLETS, PIPES, OUTLET STRUCTURE AND ROCK APRON FROM 51-P8 TO 51-N11 TO PROPOSED CHANNEL IN ACCORDANCE WITH CONSTRUCTION PLAN. IMMEDIATELY STABILIZE THE DISTURBED AREA WITH SEED, MULCH AND RECP. INSTALL COMPOST FILTER SOCK AS SHOWN ON PLANS.
7) INSTALL TEMPORARY EXCAVATION SUPPORT AND PROTECTION SYSTEM. BEGIN CONSTRUCTION OF SR 0051 EASTERN BRIDGE (SR 0051 STA 803+68.95 RT) OVER SR 0070 (FUTURE SOUTHBOUND SR 0051 DDI BRIDGE) IN ACCORDANCE WITH THE STRUCTURE PLAN. CONSTRUCT TEMPORARY PIPE AS SHOWN IN PLANS. ADD INLET CAP TO EXISTING INLETS AT BRIDGE AS SHOWN IN PLANS, ENSURE POSITIVE FLOW IS MAINTAINED OFF SR 0051.
8) MAINTAIN ALL BMPS THROUGHOUT EACH PHASE OF THE CONSTRUCTION OR UNTIL NOTICE IS GIVEN BY THE REPRESENTATIVE IN CHARGE. ONCE AREA IS STABILIZED AND PRIOR TO REMOVING E&S BMPS, SCHEDULE SITE INSPECTION BY WESTMORELAND CONSERVATION DISTRICT.
9) WHEN REMOVAL OF E&S FEATURES IS APPROVED BY WESTMORELAND CONSERVATION DISTRICT, REMOVE ALL E&S FEATURES NOT TO BE USED IN FUTURE STAGES.
10) ALL AREAS DISTURBED BY REMOVAL OF BMPS OF TEMPORARY FACILITIES MUST BE IMMEDIATELY REPAIRED AND PERMANENTLY STABILIZED.

EROSION AND SEDIMENT POLLUTION CONTROL CONSTRUCTION SEQUENCE

COMMONWEALTH OF PENNSYLVANIA
REGISTERED PROFESSIONAL
LILI BHATT
ENGINEER
PE089620

FILE: pw:\\pfnet-pw.bentley.com:pfnet-pw-01\Documents\Projects\61636\OUTPUT\COMP_01\CIVIL\EROS\SR70-E10 ESGN06.dgn
DATE: 2/2/2022 TIME: 12:32:20 PM

DISTRICT	COUNTY	ROUTE	SECTION	SHEET
12-0	WESTMORELAND	0070	E10	14 OF 135
ROSTRAVER AND SOUTH HUNTINGDON TOWNSHIPS				

REVISION NUMBER	REVISIONS	DATE	BY

SEQUENCE OF CONSTRUCTION

SMITH ROAD

1) CONSTRUCT THE RCE FOR SMITH ROAD AS SHOWN IN PLANS. INSTALL PROTECTIVE FENCE AROUND THE WETLAND AREA AS SHOWN IN E&S PLANS. INSTALL COMPOST FILTER SOCK AND INLET PROTECTION AS SHOWN.
2) COMMENCE CLEARING AND GRUBBING ACTIVITIES ASSOCIATED WITH CONSTRUCTION OF SMITH ROAD, SEDIMENT BASIN 1 AND OUTLET STRUCTURE.
3) CONSTRUCT SMITH ROAD FROM STA 504+00 TO 512+00 IN ACCORDANCE WITH THE CONSTRUCTION PLAN. IMMEDIATELY STABILIZE THE DISTURBED AREA WITH SEED, MULCH AND RECP.
4) FOLLOWING ACTIVITIES CAN BE CARRIED OUT SIMULTANEOUSLY;
   A) CONSTRUCT SEDIMENT BASIN 1 AS SHOWN ON PLAN AND DETAILS. IMMEDIATELY STABILIZE THE DISTURBED AREA WITH SEED, MULCH AND RECP.
   B) COMMENCE CLEARING AND GRUBBING ACTIVITIES ASSOCIATED WITH CONSTRUCTION OF CFS TRAP 1 AND CFS TRAP 2.
   C) CONSTRUCT CFS TRAP 1 AND CFS TRAP 2 AS SHOWN IN PLANS.
   D) CONSTRUCT CULVERT EXTENSION AT CEDAR CREEK (SMITH ROAD STA 103+90 TO 104+40 LT) USING "CULVERT EXTENSION OVER CEDAR CREEK "DETAIL AND IN ACCORDANCE WITH THE STRUCTURE PLANS. IMMEDIATELY STABILIZE THE DISTURBED AREA WITH SEED, MULCH AND RECP.
5) WHEN CULVERT EXTENSION WORK IS COMPLETED, CONSTRUCT 1.5:1 STEEPENED ROCK EMBANKMENT IN ACCORDANCE WITH THE DETAIL PROVIDED IN CONSTRUCTION PLAN. CONSTRUCT DRAINAGE SYSTEM FROM 70-D8 TO 70-D13.
6) WHEN DRAINAGE SYSTEM GOING TO TRAP 2 IS CONNECTED TO SEDIMENT BASIN 1 REMOVE TRAP 2 AS DIRECTED BY THE REPRESENTATIVE. IMMEDIATELY STABILIZE THE DISTURBED AREA WITH SEED, MULCH AND RECP.
7) CONSTRUCT SMITH ROAD FROM STA 500+00 TO 504+00 INCLUDING CUL-DE-SAC AND CONNECT TO THE EXISTING SMITH ROAD. IMMEDIATELY STABILIZE THE DISTURBED AREA WITH SEED, MULCH AND RECP.
8) MAINTAIN ALL BMPS THROUGHOUT EACH PHASE OF THE CONSTRUCTION OR UNTIL NOTICE IS GIVEN BY THE REPRESENTATIVE IN CHARGE. ONCE AREA IS STABILIZED AND PRIOR TO REMOVING E&S BMPS, SCHEDULE SITE INSPECTION BY WESTMORELAND CONSERVATION DISTRICT.
9) WHEN REMOVAL OF E&S FEATURES IS APPROVED BY WESTMORELAND CONSERVATION DISTRICT, REMOVE ALL E&S BMPS NOT TO BE USED IN THE FUTURE STAGES AND CFS TRAP 1 AND CFS TRAP 2. IMMEDIATELY STABILIZE THE DISTURBED AREA WITH SEED, MULCH AND RECP. SEDIMENT BASIN 1 IS TO REMAIN AND TO BE USED IN STAGE 4 CONSTRUCTION.
10) ALL AREAS DISTURBED BY REMOVAL OF BMPS OF TEMPORARY FACILITIES MUST BE IMMEDIATELY REPAIRED AND PERMANENTLY STABILIZED.

FINLEY ROAD AND RELOCATED FINLEY ROAD CONSTRUCTION

1) CONSTRUCT THE RCE FOR RELOCATED FINLEY ROAD AS SHOWN IN PLANS. INSTALL COMPOST FILTER SOCK, WEIGHTED SEDIMENT FILTER TUBE AND INLET PROTECTION AS SHOWN.
2) COMMENCE CLEARING AND GRUBBING ACTIVITIES ASSOCIATED WITH RELOCATED FINLEY ROAD CONSTRUCTION AND ASSOCIATED SWM BASINS 4 AND 5.
3) CONSTRUCT OUTLET PROTECTION, OUTLET STRUCTURE, INLET STRUCTURE AND DRAINAGE PIPE FROM RFR-A16 TO RFR- A15 AND RFR-A14 TO RFR-A13. INSTALL TEMPORARY PIPE FROM RFR-A12 TO RFR-A13 AND RFR-A14 TO RFR-A15 AS SHOWN ON PLANS.
4) CONSTRUCT RELOCATED FINLEY ROAD FROM STA 74+00 TO 85+00 AND CONNECT TO EXISTING SR 0051. CONSTRUCT PERMANENT DRAINAGE SYSTEM INCLUDING PIPES, INLETS, ROCK APRON AND OUTLET STRUCTURES ALONG RELOCATED FINLEY ROAD BETWEEN RFR-B1 TO RFR-B9 FROM STA 74+45 TO 76+75, RFR-C1 TO RFR-C5 AND RFR-A1 TO RFR-A12. ADD INLET CAP TO TEMPORARILY PREVENT THE WATER FROM ENTERING THEM AS INDICATED ON PLAN, ADD INLET PROTECTION ON REMAINING INLETS. IMMEDIATELY STABILIZE THE DISTURBED AREA WITH SEED, MULCH AND RECP.
5) CONSTRUCT PERMANENT PAVEMENT ON RELOCATED FINLEY ROAD AS SHOWN IN TCP PHASE 2A PLANS AND CONSTRUCTION PLANS.
6) CONSTRUCT PERMANENT DRAINAGE SYSTEM INCLUDING PIPES, INLETS AND OUTLET STRUCTURES ALONG RELOCATED FINLEY ROAD BETWEEN RFR-B5 TO RFR-B7 INCLUDING DRAINAGE SYSTEM FROM RFR-B11 AND RFR-B12. ADD INLET CAP TO TEMPORARILY PREVENT THE WATER FROM ENTERING THEM.
7) CONSTRUCT RELOCATED FINLEY ROAD BETWEEN STA 70+50 TO 74+00 AND FINLEY ROAD FROM STA 60+00 TO STA 64+00, INCLUDING ALL DRIVEWAY CONNECTIONS, CUL-DE-SAC, INLETS AND CONNECTING PIPES FROM FR-A1 TO FR-A3 TO CONNECT TO EXISTING INLET AT STA 795+22, LT AS SHOWN IN PLANS.
8) CONSTRUCT PERMANENT PAVEMENT AS SHOWN IN TCP PHASE 2B AND 2C PLANS AND CONSTRUCTION PLANS.
9) CONSTRUCT SWM BASINS 4 AND 5 AND OUTFALLS AS SHOWN IN THE CONSTRUCTION PLANS. SWM BASIN CONSTRUCTION IS CRITICAL STAGE AND NEED TO BE OVERSIGHTED BY THE LICENSED PROFESSIONAL.
10) MAINTAIN ALL BMPS THROUGHOUT EACH PHASE OF THE CONSTRUCTION OR UNTIL NOTICE IS GIVEN BY THE REPRESENTATIVE IN CHARGE. ONCE AREA IS STABILIZED AND PRIOR TO REMOVING E&S BMPS, SCHEDULE SITE INSPECTION BY WESTMORELAND CONSERVATION DISTRICT.
11) WHEN REMOVAL OF E&S FEATURES IS APPROVED BY WESTMORELAND CONSERVATION DISTRICT, REMOVE ALL E&S FEATURES NOT TO BE USED IN THE FUTURE STAGES.
12) ALL AREAS DISTURBED BY REMOVAL OF BMPS MUST BE IMMEDIATELY REPAIRED AND PERMANENTLY STABILIZED.

STAGE 3

INCLUDES CONSTRUCTION OF PERMANENT PAVEMENT ALONG SR 0070 FROM STA 352+50 TO THE SMITHTON BRIDGE, PRESERVATION WORK ON THE SMITHTON BRIDGE, PERMANENT PAVEMENT ALONG SR 0051 SB AND RAMP WORK AT THE INTERCHANGE.

CONSTRUCTION ACTIVITIES ALONG SR0070 AND SR 0051 CAN BE CARRIED OUT SIMULTANEOUSLY UNLESS OTHERWISE NOTED, STAGE 3 WORK FOLLOWS THE WORK DETAILED IN PHASE 3A-3D OF TRAFFIC CONTROL PLAN (TCP).

SR 0070 (PHASE 3A-3C)

PHASE 3A

THIS INCLUDES THE CONSTRUCTION OF SR 0070 WB SHOULDER AND TRAVEL LANE FROM STA 352+50 TO SMITHTON BRIDGE AS INDICATED IN TCP PHASE 3A PLANS.

1. CONSTRUCT THE RCE AND ADD COMPOST FILTER SOCK AS SHOWN IN PLANS.
2. CONSTRUCT PERMANENT DRAINAGE SYSTEM INCLUDING PIPES, OUTLET STRUCTURE, ROCK APRON AND INLET 70-Q4 TO CONNECT TO THE OUTLET 70-Q5. ADD INLET PROTECTION AS INDICATED.
3. FINAL GRADE THE DITCHES AS NEEDED. SEED AND STABILIZE ANY DISTURBED AREA IMMEDIATELY.
4. CONSTRUCT SR 0070 PAVEMENT FROM STA 352+50 TO SMITHTON BRIDGE AS SHOWN IN TCP PHASE 3A PLANS AND CONSTRUCTION PLANS. IMMEDIATELY STABILIZE THE DISTURBED AREA WITH SEED, MULCH AND RECP.

PHASE 3B

THIS INCLUDES THE CONSTRUCTION OF PERMANENT PAVEMENT WORK ALONG SR 0070 WB, FROM STA 352+50 TO SMITHTON BRIDGE IN ACCORDANCE WITH TCP PHASE 3B PLANS.

1. CONSTRUCT THE RCE.
2. CONSTRUCT PERMANENT DRAINAGE SYSTEM INCLUDING PIPES AND INLETS 70-Q3 AND 70-Q2 TO CONNECT TO THE DRAINAGE SYSTEM BUILT IN PHASE 3A. ADD INLET PROTECTION AS INDICATED.
3. CONSTRUCT PERMANENT DRAINAGE SYSTEM INCLUDING PIPES AND INLETS ALONG SR 0070 FROM 70-R1 TO 70-R4. ADD INLET CAP AS INDICATED.
4. CONSTRUCT PORTION OF PERMANENT PIPE BETWEEN 70-R4 AND 70-R5 WITHIN THE PAVEMENT LIMIT, CAP THE END OF THE PIPE.
4. CONSTRUCT SR 0070 EB/WB PAVEMENT, FROM STA 352+50 TO SMITHTON BRIDGE IN ACCORDANCE WITH THE PHASE 3B OF TRAFFIC CONTROL PLAN AND CONSTRUCTION PLANS.

PHASE 3C

THIS INCLUDES THE CONSTRUCTION OF SR 0070 EB SHOULDER AND TRAVEL LANE FROM STA 352+50 TO SMITHTON BRIDGE.

1. CONSTRUCT THE RCE.
2. CONSTRUCT PORTION OF PERMANENT PIPE BETWEEN 70-R4 AND 70-R5 WITHIN THE PAVEMENT LIMIT.
3. CONSTRUCT THE SR 0070 EB SHOULDER AND TRAVEL LANE FROM STA 352+50 TO SMITHTON BRIDGE IN ACCORDANCE WITH THE TCP PHASE 3C PLANS AND CONSTRUCTION PLANS.

MAINTAIN ALL BMPS THROUGHOUT EACH PHASE OF THE CONSTRUCTION OR UNTIL NOTICE IS GIVEN BY THE REPRESENTATIVE IN CHARGE. ONCE AREA IS STABILIZED AND PRIOR TO REMOVING E&S BMPS, SCHEDULE SITE INSPECTION BY WESTMORELAND CONSERVATION DISTRICT.

WHEN REMOVAL OF E&S FEATURES IS APPROVED BY WESTMORELAND CONSERVATION DISTRICT, REMOVE ALL E&S FEATURES NOT TO BE USED IN THE FUTURE STAGES.

ALL AREAS DISTURBED BY REMOVAL OF BMPS MUST BE IMMEDIATELY REPAIRED AND PERMANENTLY STABILIZED.

INTERCHANGE AREA

1) INSTALL PROTECTIVE FENCE AROUND THE WETLAND AREA ADJACENT TO RAMP B AS SHOWN IN E&S PLANS.
2) CONSTRUCT THE RCE FOR THE INTERCHANGE AREA AS SHOWN IN PLANS. INSTALL COMPOST FILTER SOCK, ROCK FILTER, WEIGHTED SEDIMENT FILTER TUBE AND INLET PROTECTION AS SHOWN.
3) COMMENCE CLEARING AND GRUBBING ACTIVITIES ASSOCIATED AT CHANNEL ALONG RAMP D STA 406+33 TO 408+68, LT. CONSTRUCT PERMANENT CHANNEL AND TEMPORARY BYPASS CHANNEL PER DETAIL "TEMPORARY BYPASS CHANNEL FOR 72" PIPE". JACK AND BORE THE 72" CROSS PIPE AT STA 322+13. INSTALL MANHOLE, OUTLET STRUCTURES AND ROCK APRON AS SHOWN. IMMEDIATELY STABILIZE THE DISTURBED AREA WITH SEED, MULCH AND RECP.
4) COMMENCE CLEARING AND GRUBBING ACTIVITIES ASSOCIATED AT SEDIMENT BASIN 2 AND TRAP 5. CONSTRUCT SEDIMENT BASIN 2 AND TRAP 5 AS SHOWN IN PLAN AND DETAILS. CONSTRUCT THE DRAINAGE SYSTEM INCLUDING PIPES, OUTLET STRUCTURE, ROCK APRON AND INLETS BETWEEN RD-A2 TO RD-A3 OUTLET STRUCTURE AS SHOWN IN THE PLANS. CONNECT OUTLET STRUCTURE FROM TRAP 5 TO RD-A2 IN TEMPORARY CONDITION. IMMEDIATELY STABILIZE THE DISTURBED AREA WITH SEED, MULCH AND RECP.
   NOTE: SEDIMENT BASIN 2 CANNOT BE CONSTRUCTED UNTIL 72" CROSS PIPE AT SR 0070 STA 322+13 IS BUILT. ANY ROADWAY AREA CONTRIBUTING FLOW TO THIS BASIN SHOULD NOT BE BUILT UNTIL 72" IS IN PLACE.
5) CONSTRUCT CROSS PIPE AT RAMP D STA 404+00 INCLUDING PIPE AND OUTLET STRUCTURES. CONNECT TO THE INLET RD-A2 BUILT PREVIOUSLY.
6) ADD WEIGHTED SEDIMENT FILTER TUBE AT RD-A1 AS SHOWN. CONSTRUCT THE CHANNEL BETWEEN RD-A1 AND 70-G21 INCLUDING CHANNEL CONNECTING TO THE OUTLET 70-G4 AND 51-J6 AS SHOWN IN PLANS. USE TEMPORARY 24" PIPE TO CONNECT THE EXISTING PIPE TO THE PROPOSED CHANNEL AS SHOWN. IMMEDIATELY STABILIZE THE DISTURBED AREA WITH SEED, MULCH AND RECP.
7) CONSTRUCT PERMANENT DRAINAGE SYSTEM INCLUDING HEADWALL 70-H3 AND PIPE TO CONNECT TO THE MANHOLE 70-H4. ADD WEIGHTED SEDIMENT FILTER TUBE AS SHOWN IN THE PLANS. CONSTRUCT CHANNEL FROM STA 208+20 TO 211+38 TO CONNECT TO THE HEADWALL 70-H3. CONSTRUCT DRAINAGE SYSTEM RB-B4 TO RB-B6 AND RB-B1 TO RB-B3 INCLUDING PIPES, MANHOLES, OUTLET STRUCTURES, ROCK APRONS AND INLETS TO CONNECT TO THIS CHANNEL AS SHOWN IN PLANS. IMMEDIATELY STABILIZE THE DISTURBED AREA WITH SEED, MULCH AND RECP.
8) ONCE THE FLOW COMING TO THE EXISTING 72" PIPE ALONG SR 0070 STA 324+00 IS DIVERTED TO THE PROPOSED 72" PIPE REMOVE TEMPORARY BYPASS CHANNEL AND CONSTRUCT PERMANENT CHANNEL BETWEEN RAMP D STA 408+68 TO STA 411+40 AND CONNECT TO THE PERMANENT CHANNEL AT STA 408+68. IMMEDIATELY STABILIZE THE DISTURBED AREA WITH SEED, MULCH AND RECP.
9) FOLLOWING ACTIVITIES CAN BE CARRIED OUT SIMULTANEOUSLY;
   A) CONSTRUCT PERMANENT DRAINAGE SYSTEM INCLUDING PIPES, INLETS, ROCK APRON AND OUTLET STRUCTURE ALONG SR 0051 NB BETWEEN 51-G7 AND 51-G22. TEMPORARILY COVER THE INLETS IN ACCORDANCE WITH TCP PHASE 3.
   B) CONSTRUCT PERMANENT DRAINAGE SYSTEM INCLUDING PIPES, INLETS, ROCK APRON AND OUTLET STRUCTURE ALONG SR 0051 NB BETWEEN 51-K1 AND 51-K9 OUTLETTING TO TRAP 5. CONSTRUCT TEMPORARY DRAINAGE SYSTEM INCLUDING PIPES AND INLETS BETWEEN T-IN3 TO T-IN7 TO CONNECT TO 51-K7 AS SHOWN. TEMPORARILY COVER THE INLETS PER THE DETAILS TO ALLOW THE TRAFFIC TO DRIVE THROUGH IN LATER PHASES IN ACCORDANCE WITH TCP PHASE 3 PLANS.
   C) CONSTRUCT CROSS PIPE AT RAMP B STA 206+45. CONSTRUCT RAMP B, RAMP B AND SR 0051 EMBANKMENTS. CONSTRUCT PERMANENT ROADWAY SWALE ALONG RAMP B TO OUTLET INTO SEDIMENT BASIN 2 THROUGH THE CROSS PIPE. IMMEDIATELY STABILIZE THE DISTURBED AREA WITH SEED, MULCH AND RECP.
   D) TEMPORARILY GRADE THE AREA FROM 70-G2 TO CONNECT TO THE EXISTING CROSS PIPE ALONG SR 0070 AT STA 316+95 RT. CONSTRUCT PERMANENT DRAINAGE SYSTEM INCLUDING PIPES, INLETS, ROCK APRON AND OUTLET STRUCTURE ALONG SR 0051 NB BETWEEN 51-H3 AND 51-H5. CONSTRUCT TEMPORARY DRAINAGE INCLUDING PIPES AND INLETS BETWEEN T-IN1 TO T-IN2 TO CONNECT TO 51-H3PROVIDING OPENING IN THE TEMPORARY SHORING. ADD INLET CAPS TO INLET 51-H2 AND 51-H3 AS SHOWN IN PLANS TO ALLOW THE TRAFFIC TO DRIVE THROUGH IN LATER PHASES IN ACCORDANCE WITH TCP PHASE 3 PLANS. IMMEDIATELY STABILIZE THE DISTURBED AREA WITH SEED, MULCH AND RECP.
   E) CONSTRUCT PERMANENT DRAINAGE INCLUDING PIPES, INLETS, CHANNEL, ROCK APRON AND OUTLET STRUCTURE ALONG SR 0051 NB BETWEEN 51-J3 AND 51-J6. ADD INLET CAP TO INLET 51-J3 TO ALLOW THE TRAFFIC TO DRIVE THROUGH IN LATER PHASES IN ACCORDANCE WITH TCP PHASE 3 PLANS. IMMEDIATELY STABILIZE THE DISTURBED AREA WITH SEED, MULCH AND RECP.

EROSION AND SEDIMENT POLLUTION CONTROL CONSTRUCTION SEQUENCE

COMMONWEALTH OF PENNSYLVANIA
REGISTERED PROFESSIONAL ENGINEER
LILI BHATT
PE069620

FILE: P:\\Gfnet-Pw_ben1@x_com.gfnet-pw-01\Documents\Projects\61636\OUTPUT\COMP_01VC1VIL\EROSS\SR70-E10 ESSN07.dgn
DATE: 2/3/2022 TIME: 12:32:23 PM

DISTRICT	COUNTY	ROUTE	SECTION	SHEET
12-0	WESTMORELAND	0070	E10	15 OF 135
ROSTRAVER AND SOUTH HUNTINGDON TOWNSHIPS				

REVISION NUMBER	REVISIONS	DATE	BY

SEQUENCE OF CONSTRUCTION

F) CONSTRUCT PERMANENT DRAINAGE SYSTEM INCLUDING PIPES, INLETS, AND OUTLET STRUCTURE ALONG SR 0051 NB BETWEEN 51-K1 AND 51-K9 OUTLETTING TO TRAP 5.
10) COMPLETE THE CONSTRUCTION OF SR 0051 EASTERN BRIDGE (SR 0051 STA 803+68.95 RT) OVER SR 0070 (FUTURE SOUTHBOUND SR 0051 DDI BRIDGE) IN ACCORDANCE WITH THE STRUCTURE PLAN AND TCP PHASE 3 PLANS.
11) CONSTRUCT PERMANENT AND TEMPORARY PAVEMENT ON PROPOSED SR 0051 NB AND RAMPS IN THE INTERCHANGE AREA AS SHOWN IN TCP PHASE 3 PLANS AND CONSTRUCTION PLANS. IMMEDIATELY STABILIZE THE DISTURBED AREA WITH SEED, MULCH AND RECP.
12) MAINTAIN ALL BMPS THROUGHOUT EACH PHASE OF THE CONSTRUCTION OR UNTIL NOTICE IS GIVEN BY THE REPRESENTATIVE IN CHARGE. ONCE AREA IS STABILIZED AND PRIOR TO REMOVING E&S BMPS, SCHEDULE SITE INSPECTION BY WESTMORELAND CONSERVATION DISTRICT.
13) UPON APPROVAL BY THE REPRESENTATIVE IN CHARGE AND WESTMORELAND CONSERVATION DISTRICT, REPLACE THE OUTLET STRUCTURE FOR SEDIMENT BASIN 2 AND CONVERT TO SWM BASIN 3. REPLACE TEMPORARY OUTLET STRUCTURE WITH HEADWALL AND CONVERT TRAP 5 TO FUNCTION AS ROADSIDE SWALE AS SHOWN IN THE CONSTRUCTION PLANS. SWM BASIN CONSTRUCTION IS CRITICAL STAGE AND NEED TO BE OVERSIGHTED BY THE LICENSED PROFESSIONAL. ANY DISTURBED AREA MUST BE IMMEDIATELY REPAIRED AND PERMANENTLY STABILIZED.
14) WHEN REMOVAL OF E&S FEATURES IS APPROVED BY WESTMORELAND CONSERVATION DISTRICT, REMOVE ALL E&S FEATURES NOT TO BE USED IN THE FUTURE STAGES.
15) ALL AREAS DISTURBED BY REMOVAL OF BMPS MUST BE IMMEDIATELY REPAIRED AND PERMANENTLY STABILIZED.

SR 0051

1) CONSTRUCT THE RCE FOR SR 0051 AS SHOWN IN PLANS. INSTALL COMPOST FILTER SOCK, ROCK FILTER, WEIGHTED SEDIMENT FILTER TUBE AND INLET PROTECTION AS SHOWN.
2) CONSTRUCT PERMANENT DRAINAGE SYSTEM INCLUDING ROADWAY SWALE, PIPES AND INLETS ALONG SR 0051 NB BETWEEN 51-A1 AND 51-A18 TO CONNECT TO INLET 51-A19, ADD INLET PROTECTION AS SHOWN IN PLANS. IMMEDIATELY STABILIZE THE DISTURBED AREA WITH SEED, MULCH AND RECP.
3) CONSTRUCT PERMANENT ROADWAY SWALE ALONG SR 0051 NB FROM STA 783+33 TO STA 786+40, RT. IMMEDIATELY STABILIZE THE DISTURBED AREA WITH SEED, MULCH AND RECP.
4) CONSTRUCT PERMANENT DRAINAGE SYSTEM INCLUDING PIPES AND INLETS ALONG SR 0051 NB BETWEEN 51-M4 AND 51-M13 TO CONNECT TO THE EXISTING INLET AT STA 817+50, LT IN TEMPORARY CONDITION, ADD INLET PROTECTION AS SHOWN IN PLANS.
5) CONSTRUCT PERMANENT DRAINAGE SYSTEM INCLUDING PIPES AND INLETS ALONG SR 0051 NB BETWEEN 51-P1 AND 51-P4 TO CONNECT TO THE EXISTING INLET AT STA 819+50, RT IN TEMPORARY CONDITION USING TEMPORARY 18" PIPE AS INDICATED, ADD INLET PROTECTION AS SHOWN IN PLANS.
6) CONSTRUCT INLET 51-P7 AND PIPE FROM 51-P7 TO 51-P8 AS INDICATED, ADD INLET PROTECTION AS SHOWN IN PLANS.
7) CONSTRUCT SR 0051 NB AS SHOWN IN TCP PHASE 3 PLANS AND CONSTRUCTION PLANS. IMMEDIATELY STABILIZE THE DISTURBED AREA WITH SEED, MULCH AND RECP.
8) MAINTAIN ALL BMPS THROUGHOUT EACH PHASE OF THE CONSTRUCTION OR UNTIL NOTICE IS GIVEN BY THE REPRESENTATIVE IN CHARGE. ONCE AREA IS STABILIZATION AND UPON APPROVAL BY THE REPRESENTATIVE IN CHARGE PRIOR TO REMOVING E&S BMPS, SCHEDULE SITE INSPECTION BY WESTMORELAND CONSERVATION DISTRICT.
9) WHEN REMOVAL OF E&S FEATURES IS APPROVED BY WESTMORELAND CONSERVATION DISTRICT, REMOVE ALL E&S FEATURES NOT TO BE USED IN THE FUTURE STAGES.
10) ALL AREAS DISTURBED BY REMOVAL OF BMPS MUST BE IMMEDIATELY REPAIRED AND PERMANENTLY STABILIZED.

STAGE 4

INCLUDES CONSTRUCTION OF SHOULDER, PERMANENT/TEMPORARY PAVEMENT ALONG SR 0070 WB, PARTIAL RAMP CONSTRUCTION, PERMANENT PAVEMENT ALONG SR 0051 SB AND ROCK ARMOR ALONG SR 0051.

CONSTRUCTION ACTIVITIES ALONG SR0070 AND SR 0051 CAN BE CARRIED OUT SIMULTANEOUSLY UNLESS OTHERWISE NOTED, STAGE 4 WORK FOLLOWS THE WORK DETAILED IN PHASE 4A-4D OF TRAFFIC CONTROL PLAN (TCP).

SR 0070

PHASE 4A-4C

THIS INCLUDES CONSTRUCTION OF SR 0070 WB PAVEMENT AND RAMPS A AND D FROM STA 293+75 TO STA 352+50 IN ACCORDANCE WITH TCP PHASE 4A-4C PLANS.

1) INSTALL PROTECTIVE FENCE AROUND THE WETLAND AREA ADJACENT TO SR 0070 STA 331+65 TO 334+81, LT AS SHOWN IN E&S PLANS.
2) CONSTRUCT THE RCE. WORK AREAS WILL VARY IN THE VICINITY OF THE SR 8024 RAMPS; CONSTRUCT RCE FOR THOSE WORK AREA SHIFTS IN ACCORDANCE WITH TCP PHASE 4A-4C PLANS. INSTALL COMPOST FILTER SOCK, ROCK FILTER, WEIGHTED SEDIMENT FILTER TUBE AND INLET PROTECTION AS SHOWN.
3) COMMENCE CLEARING AND GRUBBING ACTIVITIES ASSOCIATED WITH THE CONSTRUCTION OF THE PERMANENT AND TEMPORARY PAVEMENT ALONG SR 0070 BETWEEN STA 325+00 AND 347+50 INCLUDING TRAP 7 AREA.
4) CONSTRUCT TRAP 7 AND OUTLET STRUCTURE AS SHOWN IN THE PLANS. IMMEDIATELY STABILIZE THE DISTURBED AREA WITH SEED, MULCH AND RECP.
5) FOLLOWING ACTIVITIES CAN BE CARRIED OUT SIMULTANEOUSLY;
   A) CONSTRUCT PERMANENT DRAINAGE SYSTEM INCLUDING PIPES, INLETS, DITCH, ROCK APRON AND OUTLET STRUCTURE ALONG SR 0070 WB BETWEEN 70-J4 AND 70-J7 OUTLETTING TO TRAP 7, CAP THE END OF THE PIPE TO INLET 70-J4 TO CONNECT IN LATER STAGE.
   B) CONSTRUCT PIPE, OUTLET STRUCTURE AND ROCK APRON ALONG SR 0070 BETWEEN 70-K7 AND 70-K8, CAP THE END OF THE PIPE AT 70-K7 TO CONNECT IN LATER STAGE.
   C) CONSTRUCT INLETS, PIPES, ROCK APRON AND OUTLET STRUCTURE ALONG SR 0070 BETWEEN 70-L7 AND 70-L8, CONSTRUCT 48" PIPE TO CONNECT EXISTING CROSS PIPE TO 70-L7 IN ORDER TO OUTLET THE FLOW TO THE STREAM.
   D) CONSTRUCT PIPES, OUTLET STRUCTURE, ROCK APRON AND DITCH ALONG SR 0070 BETWEEN 70-M3 AND 70-M4, CAP THE END OF THE PIPE AT 70-M3 TO CONNECT IN LATER STAGE. CONSTRUCT TEMPORARY 18" PIPE TO OUTLET THE FLOW COMING THROUGH THE EXISTING 18" PIPE TO THE PROPOSED CHANNEL.
   E) CONSTRUCT PERMANENT DRAINAGE SYSTEM INCLUDING PIPES, INLETS, ROADSIDE SWALE, ROCK APRON AND OUTLET STRUCTURE ALONG SR 0070 WB BETWEEN 70-N1 AND 70-N7 OUTLETTING TO TRAP 8.
   F) INSTALL PIPE BETWEEN 70-D15 AND 70-D8, TO CONNECT TO THE DRAINAGE SYSTEM AT 70-D8.
6) REMOVE AND REGRADE EXISTING SR 8024 RAMPS E AND G. IMMEDIATELY STABILIZE THE DISTURBED AREA WITH SEED, MULCH AND RECP.
7) CONSTRUCT PERMANENT AND TEMPORARY PAVEMENT ON PROPOSED SR 0070 WB AS SHOWN IN TCP PHASE 4A-4C PLANS AND CONSTRUCTION PLANS. IMMEDIATELY STABILIZE THE DISTURBED AREA WITH SEED, MULCH AND RECP.

PHASE 4D

THIS INCLUDES CONSTRUCTION OF PERMANENT PAVEMENT WORK ALONG SR 0070 EB PAVEMENT FROM STA 346+00 TO STA 352+50 IN ACCORDANCE WITH TCP PHASE 4D PLANS.

1) CONSTRUCT THE RCE.
2) CONSTRUCT SR 0070 EB PAVEMENT FROM STA 346+00 TO STA 352+50 IN ACCORDANCE WITH THE TCP PHASE 4D PLANS AND CONSTRUCTION PLANS.

MAINTAIN ALL BMPS THROUGHOUT EACH PHASE OF THE CONSTRUCTION OR UNTIL NOTICE IS GIVEN BY THE REPRESENTATIVE IN CHARGE. ONCE AREA IS STABILIZED AND PRIOR TO REMOVING E&S BMPS, SCHEDULE SITE INSPECTION BY WESTMORELAND CONSERVATION DISTRICT. LEAVE TRAP 7 AND CFS TRAP 3 TO CONTINUE WORKING AS THE E&S BMP FOR STAGE 5 WORK.

WHEN REMOVAL OF E&S FEATURES IS APPROVED BY WESTMORELAND CONSERVATION DISTRICT, REMOVE ALL E&S FEATURES NOT TO BE USED IN THE FUTURE STAGES.

ALL AREAS DISTURBED BY REMOVAL OF BMPS MUST BE IMMEDIATELY REPAIRED AND PERMANENTLY STABILIZED.

INTERCHANGE AREA

1) CONSTRUCT THE RCE FOR INTERCHANGE AREA AS SHOWN IN PLANS OR AS DIRECTED FOR THE WORK AREA SHIFTS IN ACCORDANCE WITH TCP PHASE 4A-4D PLANS. INSTALL COMPOST FILTER SOCK, CFS TRAP 8 AND 9, ROCK FILTER, WEIGHTED SEDIMENT FILTER TUBE AND INLET PROTECTION AS SHOWN.
2) COMMENCE CLEARING AND GRUBBING ACTIVITIES ASSOCIATED WITH THE CONSTRUCTION OF THE PERMANENT AND TEMPORARY PAVEMENT ALONG RAMP A AND RAMP C AREA.
3) CONSTRUCT PERMANENT DRAINAGE SYSTEM INCLUDING PIPES, ROADSIDE SWALE AND INLETS ALONG RAMP C AND SR 0051 BETWEEN RC-A1 AND RC-A12 TO CONNECT TO THE TEMPORARY INLET ALONG RAMP C AT STA 311+38, RT. USE A TEMPORARY 24" PIPE AS INDICATED TO OUTLET FLOW TO INTERCHANGE AREA. ADD INLET PROTECTION TO INLETS RC-A8 TO RC-A11 INCLUDING THE TEMPORARY INLET AND INLET CAP TO INLETS RC-A1 TO RC-A7 AS SHOWN IN PLANS.
4) JACK AND BORE THE 24" PIPE UNDER RAMP A AT STA 111+00 TO OUTLET TO SEDIMENT BASIN 1 CONSTRUCTED IN PHASE 2, PROVIDE E&S MEASURE AS NEEDED TO PROVIDE MINIMAL IMPACT TO THE SEDIMENT BASIN.
5) CONSTRUCT PERMANENT DRAINAGE SYSTEM INCLUDING PIPES, ROADSIDE SWALE, OUTLET STRUCTURE, ROCK APRON AND INLETS ALONG RAMP A AND SR 0070 BETWEEN 70-F5 AND 70-F8.
6) CONSTRUCT PERMANENT DRAINAGE SYSTEM INCLUDING PIPE AND INLET ALONG SR 0051 BETWEEN 51-G1 TO 51-G6 AND CONNECT TO THE SYSTEM BUILT IN PREVIOUS STAGE. ADD INLET CAP AS SHOWN.
7) CONSTRUCT PERMANENT ROADSIDE SWALE ALONG SR 0070 BETWEEN STA 309+00 AND 313+40 AS SHOWN IN PLANS.
8) CONSTRUCT INLET, PIPE, ROCK APRON AND OUTLET STRUCTURE ALONG SR 0070 BETWEEN 70-G20 AND 70-G21.
9) CONSTRUCT PERMANENT DRAINAGE SYSTEM INCLUDING PIPE AND INLETS ALONG SR 0051 BETWEEN 51-H1 TO CONNECT TO THE SYSTEM BUILT IN PREVIOUS STAGE AT 51-H2. ADD INLET CAP TO 51-H1.
10) CONSTRUCT PERMANENT DRAINAGE SYSTEM INCLUDING PIPE AND INLET ALONG SR 0051 BETWEEN 51-J1 TO 51-J2 AND CONNECT TO THE SYSTEM BUILT IN PREVIOUS STAGE. ADD INLET CAP TO 51-J2.
11) CONSTRUCT SR 0051 WESTERN BRIDGE (SR 0051 STA 803+68.95 LT) OVER SR 0070 (FUTURE NORTHBOUND SR 0051 DDI BRIDGE) IN ACCORDANCE WITH THE STRUCTURE PLAN AND TCP PHASE 4 PLANS.
12) CONSTRUCT PERMANENT AND TEMPORARY PAVEMENT ON PROPOSED RAMP C, RAMP A, SR 0070 AND SR 0051 AS SHOWN IN TCP PHASE 4A AND 4B PLANS AND CONSTRUCTION PLANS. IMMEDIATELY STABILIZE THE DISTURBED AREA WITH SEED, MULCH AND RECP.
13) WHEN TRAFFIC IS DIVERTED TO THE PROPOSED RAMP C/ TEMPORARY RAMP C-2 AS SHOWN IN TCP PHASE 4C/4D PLAN, CONSTRUCT PERMANENT DRAINAGE SYSTEM INCLUDING PIPES, ROADSIDE SWALE, OUTLET STRUCTURE, ROCK ARPON AND INLETS ALONG RAMP C BETWEEN RC-A12 AND RC-A21 TO OUTLET TO CEDAR CREEK. INSTALL INLET PROTECTION AND REGRADE THE SWALE TO THE FINAL CONDITION AS SHOWN IN PLANS. IMMEDIATELY STABILIZE THE DISTURBED AREA WITH SEED, MULCH AND RECP.
14) WHEN TRAFFIC IS DIVERTED TO THE PROPOSED RAMP A/TEMPORARY RAMP A-2 AS SHOWN IN TCP PHASE 4C/4D PLAN;
    CONSTRUCT PART OF SWM BASIN 2 AS PER THE CONSTRUCTION PLANS. SWM BASIN CONSTRUCTION IS CRITICAL STAGE AND NEED TO BE OVERSIGHTED BY THE LICENSED PROFESSIONAL. IMMEDIATELY STABILIZE THE DISTURBED AREA WITH SEED, MULCH AND RECP.
    CONSTRUCT PERMANENT DRAINAGE SYSTEM INCLUDING PIPE AND INLET ALONG SR 0051 BETWEEN 51-M1 TO 51-M3 AND CONNECT TO THE SYSTEM BUILT IN PREVIOUS STAGE. ADD INLET PROTECTION AS SHOWN IN PLANS.
15) MAINTAIN ALL BMPS THROUGHOUT EACH PHASE OF THE CONSTRUCTION OR UNTIL NOTICE IS GIVEN BY THE REPRESENTATIVE IN CHARGE. ONCE AREA IS STABILIZED AND PRIOR TO REMOVING E&S BMPS, SCHEDULE SITE INSPECTION BY WESTMORELAND CONSERVATION DISTRICT. UPON APPROVAL BY THE REPRESENTATIVE IN CHARGE, REGRADE AND CONVERT SEDIMENT BASIN 1 TO SWM BASIN 2 AND ADD UNDERDRAINS AS PER THE CONSTRUCTION PLANS. SWM BASIN CONSTRUCTION IS CRITICAL STAGE AND NEED TO BE OVERSIGHTED BY THE LICENSED PROFESSIONAL. ANY DISTURBED AREA MUST BE IMMEDIATELY REPAIRED AND PERMANENTLY STABILIZED. REMOVE INLET COVER ON THE 51-L16 AND 51-L15 AND PLACE TOP UNIT PER CONSTRUCTION PLANS.
16) WHEN REMOVAL OF E&S FEATURES IS APPROVED BY WESTMORELAND CONSERVATION DISTRICT, REMOVE ALL E&S FEATURES NOT TO BE USED IN THE FUTURE STAGES.
17) ALL AREAS DISTURBED BY REMOVAL OF BMPS MUST BE IMMEDIATELY REPAIRED AND PERMANENTLY STABILIZED.

EROSION AND SEDIMENT POLLUTION CONTROL
CONSTRUCTION SEQUENCE

COMMONWEALTH OF PENNSYLVANIA
REGISTERED PROFESSIONAL
LILI BHATT
ENGINEER
PE089620

FILE: pw:\\dfnet-pw.penndot.gov\dfnet-pw-01\Documents\Projects\6163\OUTPUT\COMP_01\C1VIL\EROSSSR70-E10 ESGN08.dgn
DATE: 2/23/2022 TIME: 12:32:25 PM

DISTRICT	COUNTY	ROUTE	SECTION	SHEET
12-0	WESTMORELAND	0070	E10	16 OF 135
ROSTRAVER AND SOUTH HUNTINGDON TOWNSHIPS				

REVISION NUMBER	REVISIONS	DATE	BY

SEQUENCE OF CONSTRUCTION

SR 0051

1) CONSTRUCT THE RCE FOR SR 0051 AREA AS SHOWN IN PLANS OR AS DIRECTED IN ACCORDANCE WITH TCP PHASE 4A-4D PLANS. INSTALL COMPOST FILTER SOCK, ROCK FILTER, WEIGHTED SEDIMENT FILTER TUBE AND INLET PROTECTION AS SHOWN.
2) COMMENCE CLEARING AND GRUBBING ACTIVITIES ASSOCIATED WITH TRAP 6.
3) CONSTRUCT PERMANENT DRAINAGE SYSTEM INCLUDING PIPES AND INLETS ALONG SR 0051 FROM 51-A23 TO CONNECT TO THE DRAINAGE SYSTEM BUILT IN PREVIOUS STAGE AT 51-A26, ADD INLET PROTECTION AS SHOWN IN PLANS.
4) CONSTRUCT SEDIMENT TRAP 6 AS SHOWN, USE TEMPORARY 18" PIPE TO CONNECT THE OUTLET TO INLET 51-A23. IMMEDIATELY STABILIZE THE DISTURBED AREA WITH SEED, MULCH AND RECP.
5) CONSTRUCT PERMANENT DRAINAGE SYSTEM INCLUDING PIPE AND INLETS ALONG SR 0051 BETWEEN 51-B1 AND 51-B7 TO CONNECT TO TRAP 6.
6) CONSTRUCT PERMANENT DRAINAGE SYSTEM INCLUDING PIPES AND INLETS ALONG SR 0051 FROM 51-A27 TO CONNECT TO THE DRAINAGE SYSTEM BUILT IN PREVIOUS STAGE AT 51-A29, ADD INLET PROTECTION AS SHOWN IN PLANS.
7) CONSTRUCT PERMANENT DRAINAGE SYSTEM INCLUDING PIPES AND INLETS ALONG SR 0051 FROM 51-E1 TO CONNECT TO THE DRAINAGE SYSTEM BUILT IN PREVIOUS STAGE AT 51-E13, ADD INLET PROTECTION AS SHOWN IN PLANS.
8) CONSTRUCT PERMANENT DRAINAGE SYSTEM INCLUDING PIPES AND INLETS ALONG SR 0051 FROM 51-N1 TO CONNECT TO THE DRAINAGE SYSTEM BUILT IN PREVIOUS STAGE AT 51-N8, ADD INLET PROTECTION AS SHOWN IN PLANS.
9) CONSTRUCT PERMANENT DRAINAGE SYSTEM INCLUDING PIPES AND INLETS ALONG SR 0051 FROM 51-P5 TO CONNECT TO THE DRAINAGE SYSTEM BUILT IN PREVIOUS STAGE AT 51-P8, ADD INLET PROTECTION AS SHOWN IN PLANS.
10) CONSTRUCT PERMANENT AND TEMPORARY PAVEMENT ON PROPOSED SR 0051 SB AS SHOWN IN TCP PHASE 4 PLANS AND CONSTRUCTION PLANS. IMMEDIATELY STABILIZE THE DISTURBED AREA WITH SEED, MULCH AND RECP.
11) MAINTAIN ALL BMPS THROUGHOUT EACH PHASE OF THE CONSTRUCTION OR UNTIL NOTICE IS GIVEN BY THE REPRESENTATIVE IN CHARGE. ONCE AREA IS STABILIZED AND UPON APPROVAL BY THE REPRESENTATIVE IN CHARGE AND WESTMORELAND CONSERVATION DISTRICT, CONVERT TRAP 6 TO SWM BASIN 6 AS PER THE CONSTRUCTION PLANS. ADD OUTLET STRUCTURE TO CONNECT TO INLET 51-A23 AS SHOWN IN THE CONSTRUCTION PLANS. SWM BASIN CONSTRUCTION IS CRITICAL STAGE AND NEED TO BE OVERSIGHTED BY THE LICENSED PROFESSIONAL. ANY DISTURBED AREA MUST BE IMMEDIATELY REPAIRED AND PERMANENTLY STABILIZED.
12) WHEN REMOVAL OF E&S FEATURES IS APPROVED BY WESTMORELAND CONSERVATION DISTRICT, REMOVE ALL E&S FEATURES NOT TO BE USED IN THE FUTURE STAGES.
13) ALL AREAS DISTURBED BY REMOVAL OF BMPS MUST BE IMMEDIATELY REPAIRED AND PERMANENTLY STABILIZED.

ROCK ARMOR ALONG SR 0051 (STA 824+00 TO STA 834+30, LT)

1) INSTALL PROTECTIVE FENCE AROUND THE WETLAND AREA ADJACENT TO WORK AREA AS SHOWN IN E&S PLANS.
2) INSTALL COMPOST FILTER SOCK AS SHOWN.
3) COMMENCE CLEARING AND GRUBBING ACTIVITIES ASSOCIATED WITH THE WORK.
4) CONSTRUCT ROCK ARMOR AS SHOWN IN CONSTRUCTION PLANS.
5) ONCE AREA IS STABILIZED AND PRIOR TO REMOVING E&S BMPS, SCHEDULE SITE INSPECTION BY WESTMORELAND CONSERVATION DISTRICT.
6) WHEN REMOVAL OF E&S FEATURES IS APPROVED BY WESTMORELAND CONSERVATION DISTRICT, REMOVE ALL E&S FEATURES.
7) ALL AREAS DISTURBED BY REMOVAL OF BMPS MUST BE IMMEDIATELY REPAIRED AND PERMANENTLY STABILIZED.

STAGE 5

INCLUDES CONSTRUCTION OF PERMANENT PAVEMENT ALONG SR 0070 EB BETWEEN STA 293+75 AND STA 352+50 AND REMOVAL OF TEMPORARY PAVEMENT ALONG SR 0070 WB AT THE END OF THE STAGE 5. PARTIAL RAMP CONSTRUCTION AND PERMANENT MEDIAN CONSTRUCTION ALONG SR 0051.

CONSTRUCTION ACTIVITIES ALONG SR 0070, RAMPS AND SR 0051 CAN BE CARRIED OUT SIMULTANEOUSLY UNLESS OTHERWISE NOTED, STAGE 5 WORK FOLLOWS THE WORK DETAILED IN PHASE 5A-5E OF TRAFFIC CONTROL PLAN (TCP).

SR 0070

PHASE 5A-5D

THIS INCLUDES CONSTRUCTION OF PAVEMENT ALONG SR 0070EB FROM STA 293+75 TO STA 359+90 IN ACCORDANCE WITH TCP PHASE 5A-5D PLANS.

1) CONSTRUCT THE RCE FOR SR 0070 AREA AS SHOWN IN PLANS OR AS DIRECTED IN ACCORDANCE WITH TCP PHASE 5A-5D PLANS. INSTALL COMPOST FILTER SOCK, CFS TRAP 10 AND 11, ROCK FILTER, WEIGHTED SEDIMENT FILTER TUBE AND INLET PROTECTION AS SHOWN.
2) CONSTRUCT PERMANENT DRAINAGE SYSTEM INCLUDING PIPES AND INLETS ALONG SR 0070 FROM 70-J1 TO CONNECT TO THE DRAINAGE SYSTEM BUILT IN PREVIOUS STAGE AT 70-J4, TO CONNECT TO THE TRAP 7 AS SHOWN IN PLANS.
3) CONSTRUCT PERMANENT DRAINAGE SYSTEM INCLUDING PIPES AND INLETS ALONG SR 0070 FROM 70-K1 TO CONNECT TO THE DRAINAGE SYSTEM BUILT IN PREVIOUS STAGE AT 70-K7 INCLUDING 70-K9 TO 70-K2, TO CONNECT TO THE TRAP 7 AS SHOWN IN PLANS.
4) CONSTRUCT PERMANENT DRAINAGE SYSTEM INCLUDING PIPES, HEADWALL AND INLETS ALONG SR 0070 FROM 70-L1 TO CONNECT TO THE DRAINAGE SYSTEM BUILT IN PREVIOUS STAGE AT 70-L6, ADD INLET PROTECTION AS SHOWN IN PLANS.
5) CONSTRUCT PERMANENT DRAINAGE SYSTEM INCLUDING PIPES, HEADWALL AND INLETS ALONG SR 0070 FROM 70-M1 TO CONNECT TO THE DRAINAGE SYSTEM BUILT IN PREVIOUS STAGE AT 70-M3, ADD INLET PROTECTION AS SHOWN IN PLANS.
6) CONSTRUCT PERMANENT DRAINAGE SYSTEM INCLUDING PIPES AND INLETS ALONG SR 0070 FROM 70-N8 TO CONNECT TO THE DRAINAGE SYSTEM BUILT IN PREVIOUS STAGE AT 70-N3, ADD INLET PROTECTION AS SHOWN IN PLANS.
7) CONSTRUCT PERMANENT DRAINAGE SYSTEM INCLUDING PIPES AND INLETS ALONG SR 0070 FROM 70-G5 TO CONNECT TO THE DRAINAGE SYSTEM BUILT IN PREVIOUS STAGE AT 70-G20, ADD INLET PROTECTION AS SHOWN IN THE PLANS.
8) CONSTRUCT PERMANENT DRAINAGE SYSTEM INCLUDING PIPES, OUTLET STRUCTURE, ROCK APRON AND INLETS ALONG SR 0070 FROM 70-H6 TO 70-H13 TO CONNECT TO SWM BASIN 3 AT 70-H11 CONSTRUCTED IN A PREVIOUS STAGE, ADD INLET PROTECTION AS SHOWN IN THE PLANS.
9) CONSTRUCT SR 0070 EB, RAMPS B AND C AS SHOWN IN TCP PHASE 5A-5D PLANS AND CONSTRUCTION PLANS. IMMEDIATELY STABILIZE THE DISTURBED AREA WITH SEED, MULCH AND RECP.

PHASE 5E

THIS INCLUDES REMOVAL OF TEMPORARY PAVEMENT ALONG SR 0070 WB IN ACCORDANCE WITH TCP PHASE 5E PLANS.

1) CONSTRUCT THE RCE FOR REMOVAL OF TEMPORARY PAVEMENT ALONG SR 0070 WB AREA AS DIRECTED AND IN ACCORDANCE WITH TCP PHASE 5E PLANS. CONTINUE THE USE OF COMPOST FILTER SOCK, SEDIMENT TRAPS AND INLET PROTECTION FROM PREVIOUS STAGE. INSTALL ADDITIONAL COMPOST FILTER SOCK, INLET PROTECTION AND SEDIMENT FILTER TUBE AS SHOWN IN PLANS.
2) REMOVE THE TEMPORARY PAVEMENT AND GRADE TO THE FINAL CONDITION SR 0070 WB AS SHOWN IN THE TCP PHASE 5E PLANS AND CONSTRUCTION PLANS. SET FINAL BARRIER AND INSTALL GUIDE RAIL AS NEEDED. IMMEDIATELY STABILIZE THE DISTURBED AREA WITH SEED, MULCH AND RECP.

MAINTAIN ALL BMPS THROUGHOUT EACH PHASE OF THE CONSTRUCTION OR UNTIL NOTICE IS GIVEN BY THE REPRESENTATIVE IN CHARGE. ONCE AREA IS STABILIZED AND UPON APPROVAL BY THE REPRESENTATIVE IN CHARGE PRIOR TO REMOVING E&S BMPS, SCHEDULE SITE INSPECTION BY WESTMORELAND CONSERVATION DISTRICT. UPON APPROVAL BY THE CONSERVATION DISTRICT CONVERT TRAP 7 TO SWM BASIN 8 AND TRAP 8 TO SWM BASIN 9. ADD UNDERDRAINS AS PER THE CONSTRUCTION PLANS. SWM BASIN CONSTRUCTION IS CRITICAL STAGE AND NEED TO BE OVERSIGHTED BY THE LICENSED PROFESSIONAL. ANY DISTURBED AREA MUST BE IMMEDIATELY REPAIRED AND PERMANENTLY STABILIZED.

WHEN REMOVAL OF E&S FEATURES IS APPROVED BY WESTMORELAND CONSERVATION DISTRICT, REMOVE ALL E&S FEATURES.

ALL AREAS DISTURBED BY REMOVAL OF BMPS MUST BE IMMEDIATELY REPAIRED AND PERMANENTLY STABILIZED.

SR 0051

1) FINISH OR BEGIN CONSTRUCTION OF CONCRETE DIVIDER ISLANDS, AND REGRADING OF SHOULDERS AROUND THESE ISLANDS. REMOVE ANY TEMPORARY PAVEMENT INSTALLED IN PREVIOUS STAGES IN THE AREA OF THIS WORK. NONE OF THIS WORK IS ANTICIPATED TO CREATE ANY EARTH DISTURBANCE.
2) INSTALL REMAINING PORTIONS OF FINAL GUIDE RAIL. IMMEDIATELY STABILIZE THE DISTURBED AREA WITH SEED, MULCH AND RECP.
3) ADD INLET PROTECTION AS SHOWN IN THE PLANS TO PERFORM THE REHABILITATION OF CEDAR CREEK STRUCTURE BETWEEN SR 0051 STA 834+00 TO STA 835+00 IN ACCORDANCE WITH THE STRUCTURE PLANS.
4) ADD INLET PROTECTION AND COMPOST FILTER SOCK AS SHOWN IN THE PLANS TO CONSTRUCT SIDEWALK AND CURB RAMPS AT INTERSECTION OF SR 0051 AND HARPER DRIVE/CONCORD LANE.

MAINTAIN ALL BMPS THROUGHOUT EACH PHASE OF THE CONSTRUCTION OR UNTIL NOTICE IS GIVEN BY THE REPRESENTATIVE IN CHARGE. ONCE AREA IS STABILIZED AND UPON APPROVAL BY THE REPRESENTATIVE IN CHARGE PRIOR TO REMOVING E&S BMPS, SCHEDULE SITE INSPECTION BY WESTMORELAND CONSERVATION DISTRICT.

WHEN REMOVAL OF E&S FEATURES IS APPROVED BY WESTMORELAND CONSERVATION DISTRICT, REMOVE ALL E&S FEATURES.

ALL AREAS DISTURBED BY REMOVAL OF BMPS MUST BE IMMEDIATELY REPAIRED AND PERMANENTLY STABILIZED.

EROSION AND SEDIMENT POLLUTION CONTROL CONSTRUCTION SEQUENCE

COMMONWEALTH OF PENNSYLVANIA
REGISTERED PROFESSIONAL
LILI BHATT
ENGINEER
PE089620

FILE: pw:\\pfnet-pw.bentley.com:pfnet-pw-01\Documents\Projects\61636\OUTPUT\COMP_01\CIVIL\EROS\SR70-E10 EGN09.dgn
DATE: 8/22/2022 TIME: 12:23:39 PM

DISTRICT	COUNTY	ROUTE	SECTION	SHEET
12-0	WESTMORELAND	0070	E10	39 OF 135
ROSTRAVER TOWNSHIP				

REVISION NUMBER	REVISIONS	DATE	BY

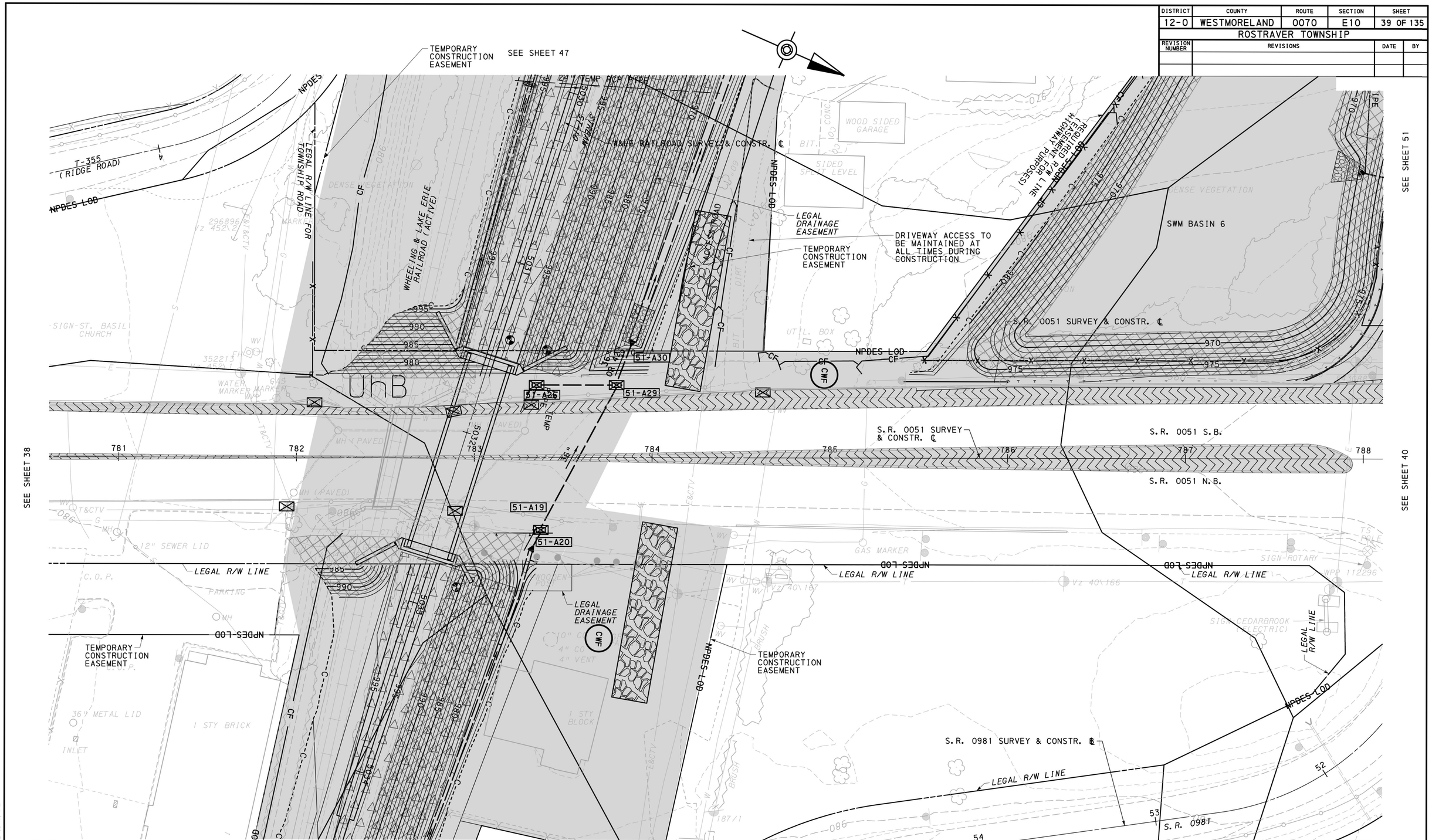

LEGEND

- 185 — EXISTING CONTOUR
- 185 — PROPOSED CONTOUR
- 100 YR FLOODPLAIN
- 70-A1 DRAINAGE STRUCTURE DESIGNATION
- INLET PROTECTION
- PROPOSED ENDWALL
- FLOW ARROW
- STREAM
- DIVERSION BERM
- PROPOSED INLET AND PIPES
- PROPOSED MANHOLE
- CF — COMPOST FILTER SOCK
- SEE SHEET 48
- PROPOSED DITCH
- RIPRAP APRON
- TEMPORARY EXTENDED-TERM, ROLLED EROSION CONTROL PRODUCT, TYPE 3B
- ROCK FILTER
- CIB — SOIL BOUNDARY/SOIL TEXT
- LOD — LIMIT OF DISTURBANCE
- NPDES — NPDES BOUNDARY
- WORK AREA
- CWF — CONCRETE WASHOUT FACILITY
- ES-1 — RIPRAP APRON DESIGNATION
- WETLAND
- DRAINAGE AREA TO BMP
- TEMPORARY PAVEMENT
- WEIGHTED SEDIMENT FILTER TUBE
- CLEANOUT STAKE
- INLET CAP
- RCE — ROCK CONSTRUCTION ENTRANCE
- TEMPORARY EXCAVATION SUPPORT
- PF — TEMPORARY PROTECTIVE FENCING
- FOUNDATION GROUND IMPROVEMENT AREA
- TC — TURBIDITY CURTAIN
- PROPOSED TREE LINE

EROSION AND SEDIMENT POLLUTION CONTROL SHEET
STAGE 2

0 25 50 FEET

COMMONWEALTH OF PENNSYLVANIA — REGISTERED PROFESSIONAL — LILI BHATT — ENGINEER — PE089620

FILE: pw:\\gfnet-pw.bentley.com:gfnet-pw-01\Documents\Projects\61636\OUTPUT\COMP_01\CIVIL\EROS\SR70-E10 25sc ES213.dgn
DATE: 2/3/2022 TIME: 12:35:43 PM

DISTRICT	COUNTY	ROUTE	SECTION	SHEET
12-0	WESTMORELAND	0070	E10	46 OF 135
	ROSTRAVER TOWNSHIP			

REVISION NUMBER	REVISIONS	DATE	BY

STREAM ST-15

STREAM ST-17

STREAM ST-16

DENSE WOODS

DENSE VEG

SHADOW

TEMPORARY CONSTRUCTION EASEMENT

NPDES LOD

CF

C

F

1005

1000

995

990

5017

5018

5019

5020

5021

5022

5023

5024

W&LE RAILROAD SURVEY & CONSTR. ℄

WHEELING & LAKE ERIE RAILROAD (ACTIVE)

SEE SHEET 47

LEGEND

- EXISTING CONTOUR
- PROPOSED CONTOUR
- 100 YR FLOODPLAIN
- 70-A1 DRAINAGE STRUCTURE DESIGNATION
- INLET PROTECTION
- PROPOSED ENDWALL
- FLOW ARROW
- STREAM
- DIVERSION BERM
- PROPOSED INLET AND PIPES
- PROPOSED MANHOLE
- CF COMPOST FILTER SOCK
- PROPOSED DITCH
- RIPRAP APRON
- TEMPORARY EXTENDED-TERM, ROLLED EROSION CONTROL PRODUCT, TYPE 3B
- ROCK FILTER
- CIB SOIL BOUNDARY/SOIL TEXT
- LOD LIMIT OF DISTURBANCE
- NPDES NPDES BOUNDARY
- WORK AREA
- CWF CONCRETE WASHOUT FACILITY
- ES-1 RIPRAP APRON DESIGNATION
- WETLAND
- DRAINAGE AREA TO BMP
- TEMPORARY PAVEMENT
- WEIGHTED SEDIMENT FILTER TUBE
- CLEANOUT STAKE
- INLET CAP
- RCE ROCK CONSTRUCTION ENTRANCE
- TEMPORARY EXCAVATION SUPPORT
- PF TEMPORARY PROTECTIVE FENCING
- FOUNDATION GROUND IMPROVEMENT AREA
- TC TURBIDITY CURTAIN
- PROPOSED TREE LINE

EROSION AND SEDIMENT POLLUTION CONTROL SHEET STAGE 2

0 25 50 FEET

COMMONWEALTH OF PENNSYLVANIA
REGISTERED PROFESSIONAL
LILI BHATT
ENGINEER
PE089620

FILE: pw:\\gfner-pw.bentley.com:gfner-pw-01\Documents\Projects\61636\OUTPUT\COMP_01\CIVIL\EROS\SR70-E10 25sc ES220.dgn
DATE: 2/7/2022 TIME: 12:56:46 PM

DISTRICT	COUNTY	ROUTE	SECTION	SHEET
12-0	WESTMORELAND	0070	E10	47 OF 135

ROSTRAVER TOWNSHIP

REVISION NUMBER	REVISIONS	DATE	BY

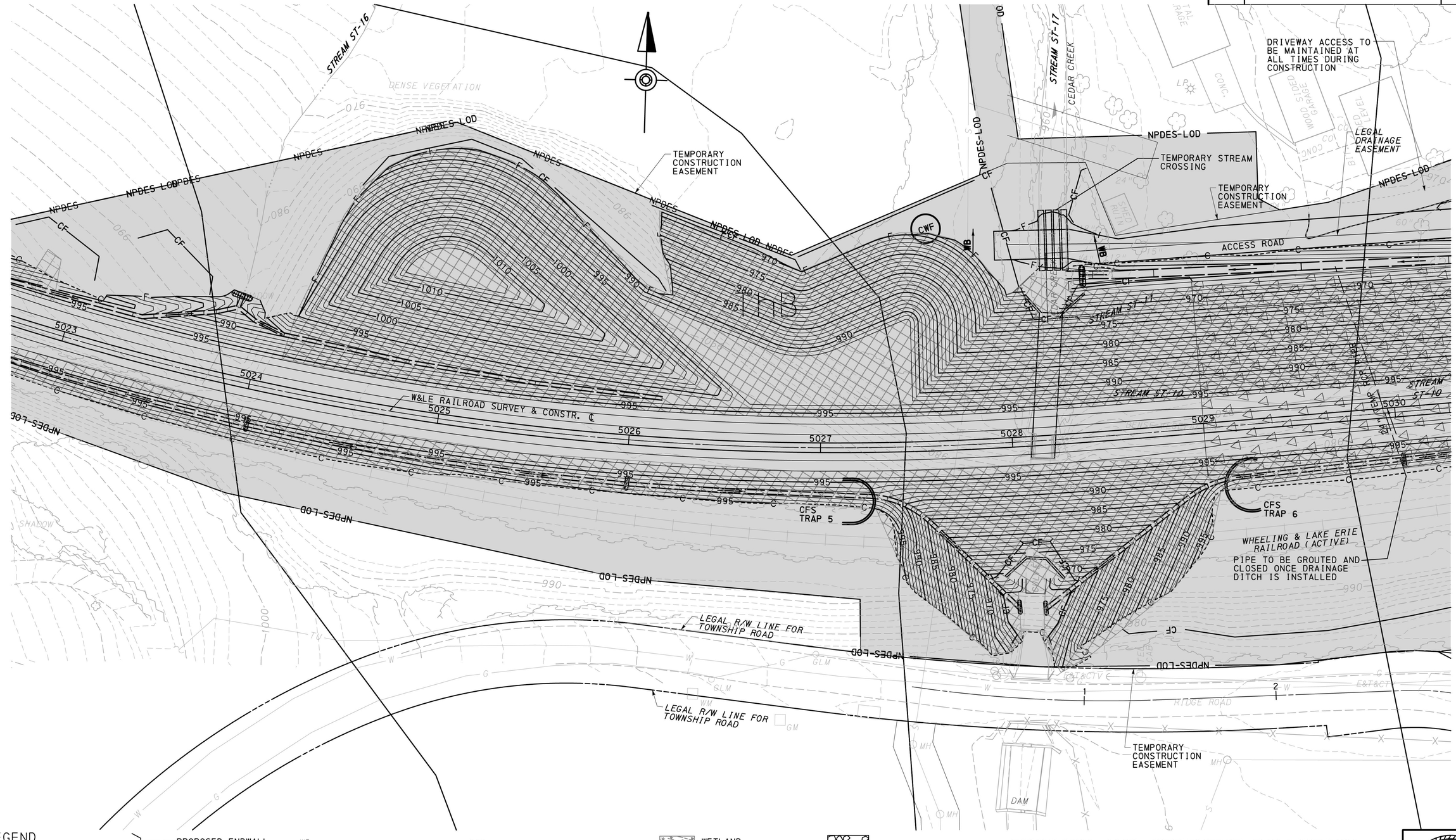

LEGEND

- 185 — EXISTING CONTOUR
- 185 — PROPOSED CONTOUR
- 100 YR FLOODPLAIN
- 70-A1 DRAINAGE STRUCTURE DESIGNATION
- INLET PROTECTION
- PROPOSED ENDWALL
- FLOW ARROW
- STREAM
- DIVERSION BERM
- PROPOSED INLET AND PIPES
- PROPOSED MANHOLE
- CF — COMPOST FILTER SOCK
- WB — WATERBAR
- PROPOSED DITCH
- RIPRAP APRON
- TEMPORARY EXTENDED-TERM, ROLLED EROSION CONTROL PRODUCT, TYPE 3B
- ROCK FILTER
- CIB — SOIL BOUNDARY/SOIL TEXT
- LOD — LIMIT OF DISTURBANCE
- NPDES — NPDES BOUNDARY
- WORK AREA
- CWF — CONCRETE WASHOUT FACILITY
- ES-1 — RIPRAP APRON DESIGNATION
- WETLAND
- DRAINAGE AREA TO BMP
- TEMPORARY PAVEMENT
- WEIGHTED SEDIMENT FILTER TUBE
- CLEANOUT STAKE
- INLET CAP
- RCE — ROCK CONSTRUCTION ENTRANCE
- TEMPORARY EXCAVATION SUPPORT
- PF — TEMPORARY PROTECTIVE FENCING
- FOUNDATION GROUND IMPROVEMENT AREA
- TC — TURBIDITY CURTAIN
- PROPOSED TREE LINE

EROSION AND SEDIMENT POLLUTION CONTROL SHEET
STAGE 2

0 25 50 FEET

COMMONWEALTH OF PENNSYLVANIA
REGISTERED PROFESSIONAL
LILI BHATT
ENGINEER
PE089620

FILE: pw:\\gfnet-pw.bentley.com:gfnet-pw-01\Documents\Projects\61636\OUTPUT\COMP_01\CIVIL\EROS\SR70-E10 25sc ES221.dgn
DATE: 2/3/2022 TIME: 12:36:54 PM

DISTRICT	COUNTY	ROUTE	SECTION	SHEET
12-0	WESTMORELAND	0070	E10	48 OF 135
	ROSTRAVER TOWNSHIP			

REVISION NUMBER	REVISIONS	DATE	BY

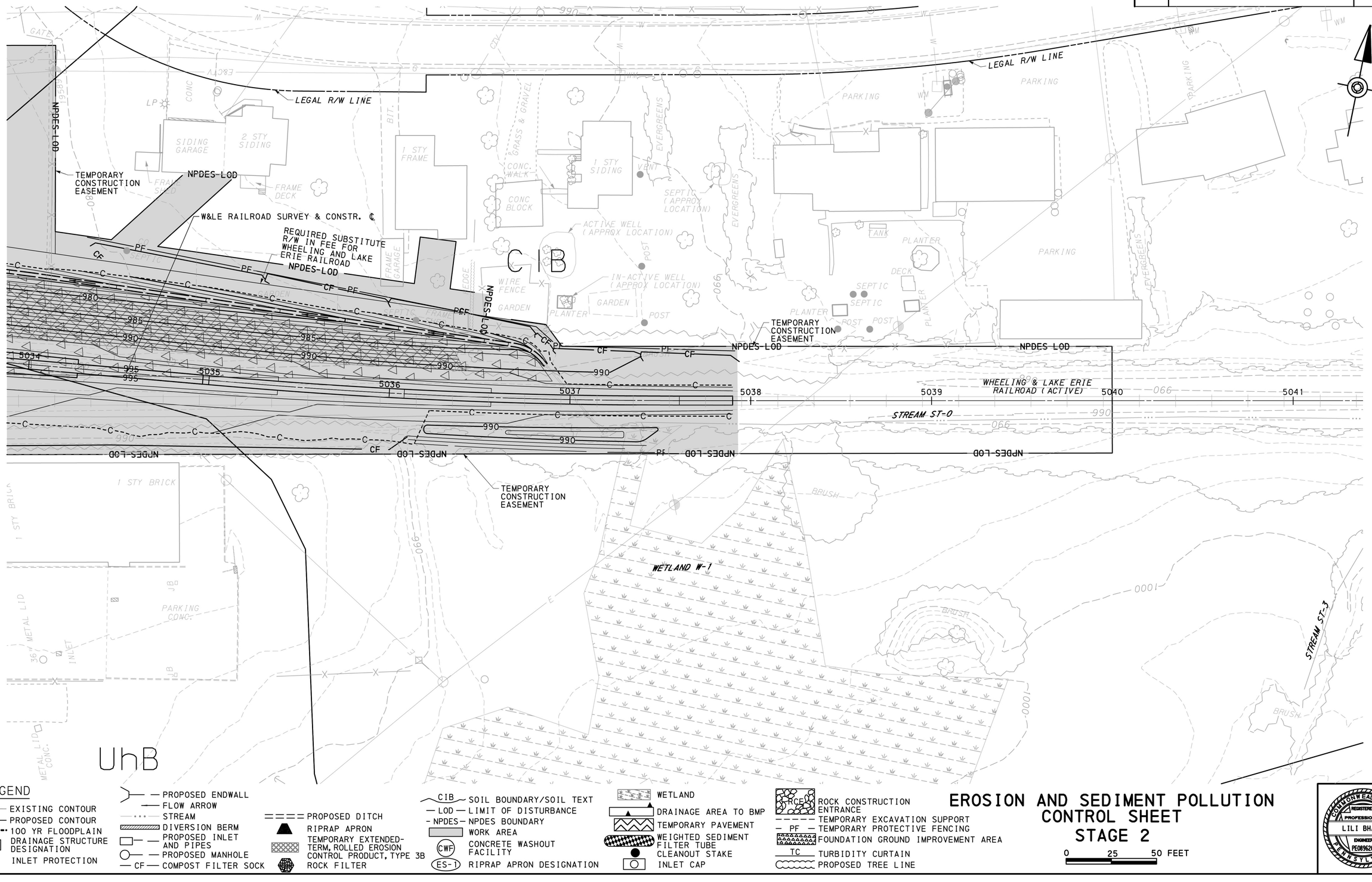

LEGEND

- EXISTING CONTOUR
- PROPOSED CONTOUR
- 100 YR FLOODPLAIN
- DRAINAGE STRUCTURE DESIGNATION
- INLET PROTECTION
- PROPOSED ENDWALL
- FLOW ARROW
- STREAM
- DIVERSION BERM
- PROPOSED INLET AND PIPES
- PROPOSED MANHOLE
- COMPOST FILTER SOCK
- PROPOSED DITCH
- RIPRAP APRON
- TEMPORARY EXTENDED-TERM, ROLLED EROSION CONTROL PRODUCT, TYPE 3B
- ROCK FILTER
- SOIL BOUNDARY/SOIL TEXT
- LIMIT OF DISTURBANCE
- NPDES BOUNDARY
- WORK AREA
- CONCRETE WASHOUT FACILITY
- RIPRAP APRON DESIGNATION
- WETLAND
- DRAINAGE AREA TO BMP
- TEMPORARY PAVEMENT
- WEIGHTED SEDIMENT FILTER TUBE
- CLEANOUT STAKE
- INLET CAP
- ROCK CONSTRUCTION ENTRANCE
- TEMPORARY EXCAVATION SUPPORT
- TEMPORARY PROTECTIVE FENCING
- FOUNDATION GROUND IMPROVEMENT AREA
- TURBIDITY CURTAIN
- PROPOSED TREE LINE

EROSION AND SEDIMENT POLLUTION CONTROL SHEET STAGE 2

0 25 50 FEET

COMMONWEALTH OF PENNSYLVANIA
REGISTERED PROFESSIONAL
LILI BHATT
ENGINEER
PE089620

FILE: pw:\\gfner-pw.bentley.com:gfner-pw-01\Documents\Projects\61636\OUTPUT\COMP_01\CIVIL\EROS\SR70-E10 25sec ES222.dgn
DATE: 2/7/2022 TIME: 12:31:02 PM

DISTRICT	COUNTY	ROUTE	SECTION	SHEET
12-0	WESTMORELAND	0070	E10	57 OF 135
	ROSTRAVER TOWNSHIP			

REVISION NUMBER	REVISIONS	DATE	BY

W&LE RAILROAD SURVEY & CONSTR. ℄

LEGAL R/W LINE FOR TOWNSHIP ROAD

T-355 (RIDGE ROAD)

NPDES LOD

LEGAL R/W LINE FOR TOWNSHIP ROAD

LEGAL R/W LINE

WHEELING & LAKE ERIE RAILROAD (ACTIVE)

NPDES LOD

LEGAL DRAINAGE EASEMENT

DRIVEWAY ACCESS TO BE MAINTAINED AT ALL TIMES DURING CONSTRUCTION

TEMPORARY CONSTRUCTION EASEMENT

REQUIRED R/W LINE EASEMENT FOR HIGHWAY PURPOSES

NPDES LOD

SWM BASIN 6

NPDES LOD

24" OR 30"

24" OR 30"

24" OR 30"

S.R. 0051 SURVEY & CONSTR. ℄

S.R. 0051 S.B.

S.R. 0051 N.B.

51-A12 51-A13 51-A14 51-A15 51-A16 51-A17 51-A18 51-A19 51-A20

CF

NPDES LOD

LEGAL R/W LINE

LEGAL R/W LINE

LEGAL DRAINAGE EASEMENT

TEMPORARY CONSTRUCTION EASEMENT

NPDES LOD

TEMPORARY CONSTRUCTION EASEMENT

NPDES LOD

S.R. 0981 SURVEY & CONSTR. ℄

LEGAL R/W LINE

SEE SHEET 56

SEE SHEET 58

LEGEND

- 185 — EXISTING CONTOUR
- 185 — PROPOSED CONTOUR
- 100 YR FLOODPLAIN
- 70-A1 DRAINAGE STRUCTURE DESIGNATION
- INLET PROTECTION
- PROPOSED ENDWALL
- FLOW ARROW
- STREAM
- DIVERSION BERM
- PROPOSED INLET AND PIPES
- PROPOSED MANHOLE
- CF — COMPOST FILTER SOCK
- PROPOSED DITCH
- RIPRAP APRON
- TEMPORARY EXTENDED-TERM, ROLLED EROSION CONTROL PRODUCT, TYPE 3B
- ROCK FILTER
- CIB — SOIL BOUNDARY/SOIL TEXT
- LOD — LIMIT OF DISTURBANCE
- NPDES — NPDES BOUNDARY
- WORK AREA
- CWF — CONCRETE WASHOUT FACILITY
- ES-1 — RIPRAP APRON DESIGNATION
- WETLAND
- DRAINAGE AREA TO BMP
- TEMPORARY PAVEMENT
- WEIGHTED SEDIMENT FILTER TUBE
- CLEANOUT STAKE
- INLET CAP
- RCE — ROCK CONSTRUCTION ENTRANCE
- TEMPORARY EXCAVATION SUPPORT
- PF — TEMPORARY PROTECTIVE FENCING
- FOUNDATION GROUND IMPROVEMENT AREA
- TC — TURBIDITY CURTAIN
- PROPOSED TREE LINE

EROSION AND SEDIMENT POLLUTION CONTROL SHEET STAGE 3

0 25 50 FEET

COMMONWEALTH OF PENNSYLVANIA — REGISTERED PROFESSIONAL ENGINEER — LILI BHATT — PE089620

FILE: pw:\\vpnet-pw.bentley.com:pwnet-pw-01\Documents\Projects\61636\OUTPUT\COMP_01\CIVIL\EROS\SR70-E10 25sc ES303.dgn
DATE: 2/8/2022 TIME: 3:15:18 PM

DISTRICT	COUNTY	ROUTE	SECTION	SHEET
12-0	WESTMORELAND	0070	E10	82 OF 135
ROSTRAVER TOWNSHIP				

REVISION NUMBER	REVISIONS	DATE	BY

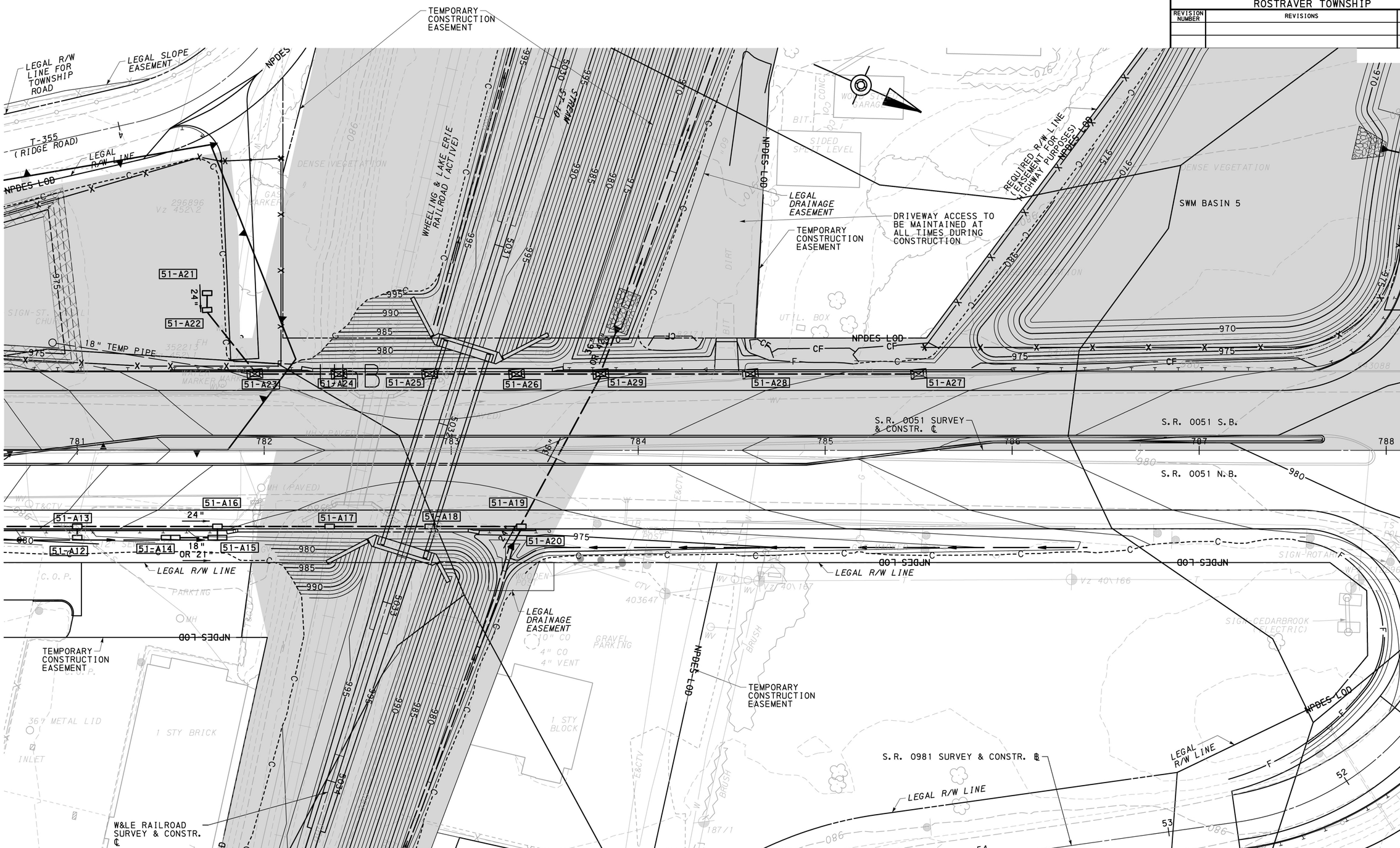

LEGEND

- 185 — EXISTING CONTOUR
- 185 — PROPOSED CONTOUR
- 100 YR FLOODPLAIN
- 70-A1 DRAINAGE STRUCTURE DESIGNATION
- INLET PROTECTION
- PROPOSED ENDWALL
- FLOW ARROW
- STREAM
- DIVERSION BERM
- PROPOSED INLET AND PIPES
- PROPOSED MANHOLE
- CF — COMPOST FILTER SOCK
- PROPOSED DITCH
- RIPRAP APRON
- TEMPORARY EXTENDED-TERM, ROLLED EROSION CONTROL PRODUCT, TYPE 3B
- ROCK FILTER
- CIB — SOIL BOUNDARY/SOIL TEXT
- LOD — LIMIT OF DISTURBANCE
- NPDES — NPDES BOUNDARY
- WORK AREA
- CWF — CONCRETE WASHOUT FACILITY
- ES-1 — RIPRAP APRON DESIGNATION
- WETLAND
- DRAINAGE AREA TO BMP
- TEMPORARY PAVEMENT
- WEIGHTED SEDIMENT FILTER TUBE
- CLEANOUT STAKE
- INLET CAP
- RCE — ROCK CONSTRUCTION ENTRANCE
- TEMPORARY EXCAVATION SUPPORT
- PF — TEMPORARY PROTECTIVE FENCING
- FOUNDATION GROUND IMPROVEMENT AREA
- TC — TURBIDITY CURTAIN
- PROPOSED TREE LINE

EROSION AND SEDIMENT POLLUTION CONTROL SHEET STAGE 4

0 25 50 FEET

COMMONWEALTH OF PENNSYLVANIA
REGISTERED PROFESSIONAL ENGINEER
LILI BHATT
PE089620

FILE: pw:\\gfnet-pw.bentley.com:gfnet-pw-01\Documents\Projects\61636\OUTPUT\COMP_01\CIVIL\EROS\SR70-E10 25sc ES415.dgn
DATE: 2/8/2022 TIME: 3:18:16 PM

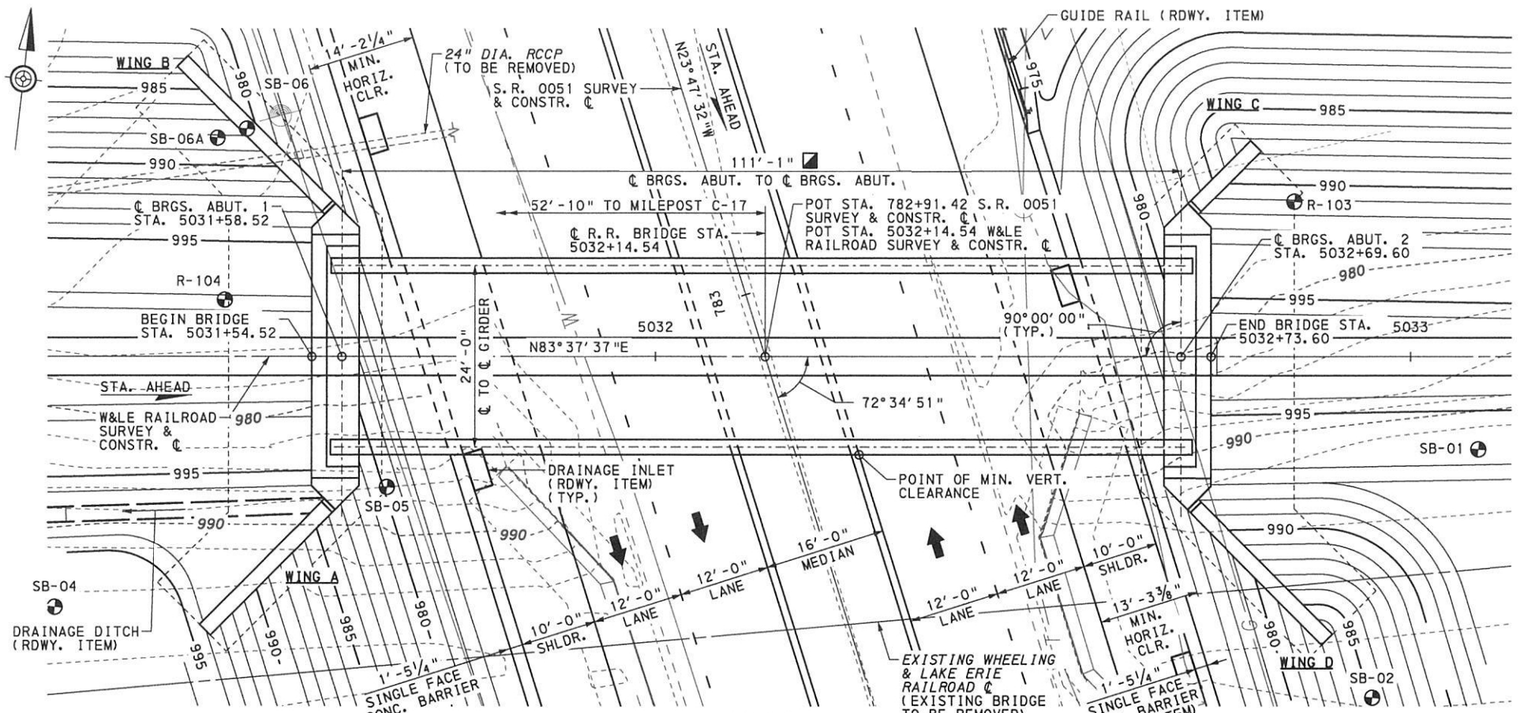

PLAN

5' 0 5' 10'

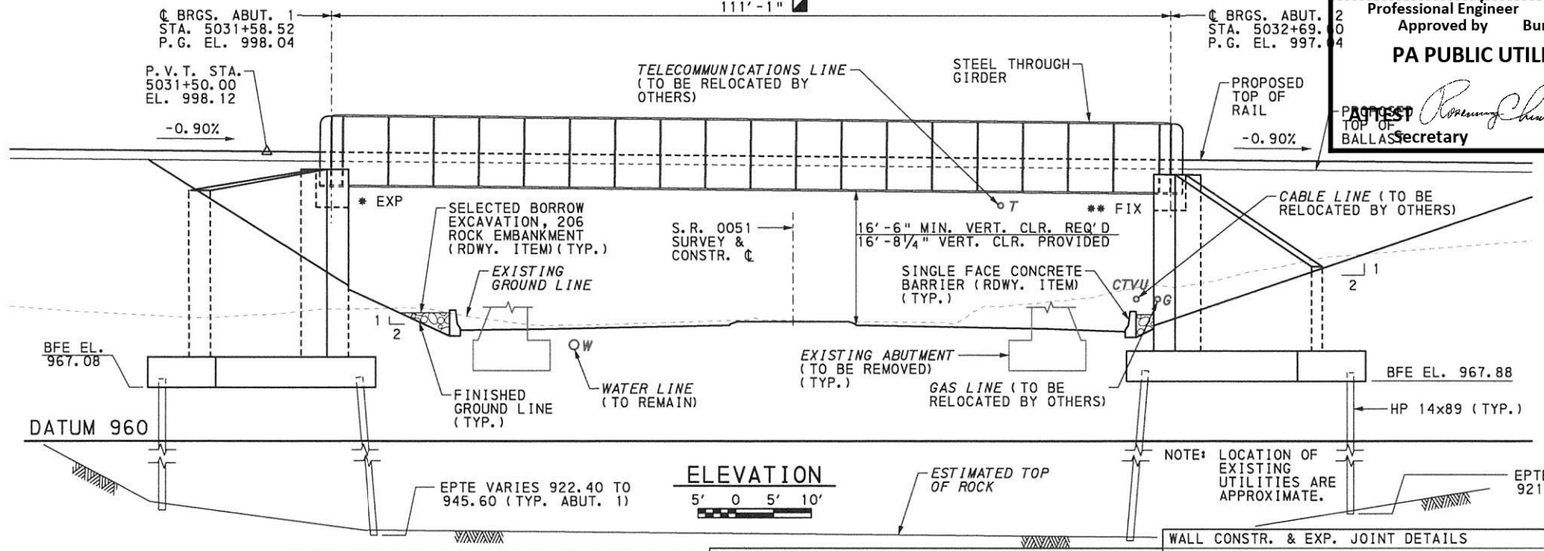

ELEVATION

5' 0 5' 10'

NOTE: LOCATION OF EXISTING UTILITIES ARE APPROXIMATE.

VERTICAL CURVE DATA

W&LE RAILROAD SURVEY & CONSTR. ℄

PVI STA. 5029+95.00
ELEV. 999.51
VC = 310.00'
MO = -0.35'

0.00% -0.90%

S.R. 0051 SURVEY & CONSTR. ℄

PVI STA. 781+75.00
ELEV. 974.94
VC = 375.00'
MO = 2.19'
S.S.D. = 369'

-3.75% 0.92%

HORIZONTAL CURVE DATA

W&LE RAILROAD SURVEY & CONSTR. ℄	S.R. 0051 SURVEY & CONSTR. ℄
TANGENT ALIGNMENT	TANGENT ALIGNMENT

NOTES:

1. FOR INDEX OF DRAWINGS, SEE SHEET 2.
2. FOR APPROXIMATE LIMITS OF TEMPORARY EXCAVATION SUPPORT AND PROTECTION SYSTEM, SEE SHEETS 5 AND 6.
3. FOR GIRDER LOAD AND STRESS SUMMARY, SEE SHEET 27.
4. FOR TYPICAL SECTION, SEE SHEET 2.

LEGEND:

*	- STEEL ROCKER BEARINGS
**	- STEEL PIN BEARINGS
⊕	- STRUCTURE BORING LOCATIONS
◪	- MEASURED ALONG W&LE RAILROAD SURVEY & CONSTR. ℄
------	- EXISTING CONTOURS (2' INTERVAL)
———	- PROPOSED CONTOURS (1' INTERVAL)
➡	- INDICATES DIRECTION OF TRAFFIC
BFE	- BOTTOM OF FOOTING ELEVATION
EPTE	- ESTIMATED PILE TIP ELEVATION

CERTIFIED CORRECT PLANS

Daniel R. Hilbrich
Professional Engineer
Approved by Bureau of Technical Utility Services

PA PUBLIC UTILITY COMMISSION

ATTEST Rosemary Chiavetta
Secretary

PUCNO. A-2019-3009782, DOT 472 722 J

Mark	Description	By	Chk'd.	Recm'd.	Date
REVISIONS					

S.R. 0051 PREVIOUSLY KNOWN AS L.R. 288

STRUCTURE BORINGS

BORING NUMBER	S.R. 0051 STATION	OFFSET
SB-01	782+51.50	86.40' RT.
SB-02	782+24.50	63.24' RT.
SB-04	782+88.05	99.53' LT.
SB-05	782+90.00	53.00' LT.
SB-06	783+40.70	56.50' LT.
SB-06A	783+40.70	60.50' LT.
R-103	782+90.00	73.00' RT.
R-104	783+20.00	66.00' LT.

DES: CJP | DWN: CJP | CHK: CTV

COMMONWEALTH OF PENNSYLVANIA REGISTERED PROFESSIONAL CHRISTOPHER T. VOLLMER ENGINEER NO. PE-068383

PREPARED BY:
GANNETT FLEMING, INC.
FOSTER PLAZA 8, SUITE 400
730 HOLIDAY DRIVE
PITTSBURGH, PA 15220

Christopher T. Vollmer 1-4-22

DESCRIPTION	DWG. NO.	APP. DATE
WALL CONSTR. & EXP. JOINT DETAILS	BC-735M	9/30/16
REINFORCEMENT BAR FABRICATION DETAILS	BC-736M	1/31/19
BRIDGE DRAINAGE	BC-751M	1/31/19
STEEL GIRDER DETAILS	BC-753M	1/31/19
BEARINGS	BC-755M	1/31/19
STEEL PILE TIP REINFORCEMENTS & SPLICES	BC-757M	9/30/16
TYPICAL WATERPROOFING AND EXPANSION DETAILS	BC-788M	1/31/19
CLASSIFICATION OF EARTHWORK FOR STRUCTURES	RC-11M	6/1/10
BACKFILL AT STRUCTURES	RC-12M	2/8/19
SUBSURFACE DRAINS	RC-30M	12/17/19
ENDWALLS	RC-31M	6/1/10

SUPPLEMENTAL DRAWINGS

COMMONWEALTH OF PENNSYLVANIA
DEPARTMENT OF TRANSPORTATION

WESTMORELAND COUNTY
S.R. 0070 SECTION E10

SEGMENT 40/41 OFFSET 1725 /1692 (NB/SB)
WHEELING & LAKE ERIE RAILROAD (MP C-17.01)
OVER S.R. 0051 STATION 782+91.42
SINGLE SPAN THROUGH GIRDER BRIDGE
GENERAL PLAN & ELEVATION

RECOMMENDED February 3rd, 2022

Jeremy Hughes
DISTRICT BRIDGE ENGINEER

SHEET 1 OF 44
+SUPPLEMENTAL DRAWINGS

pw:\\gfnet-pw.bentley.com:gfnet-pw-01\Documents\Projects\61636\INPUT\COMP_01\CIVIL\BRDG\W&LE RR BRIDGE\SHT01_PLAN_ELEVATION
1/4/2022 2:52:43 PM

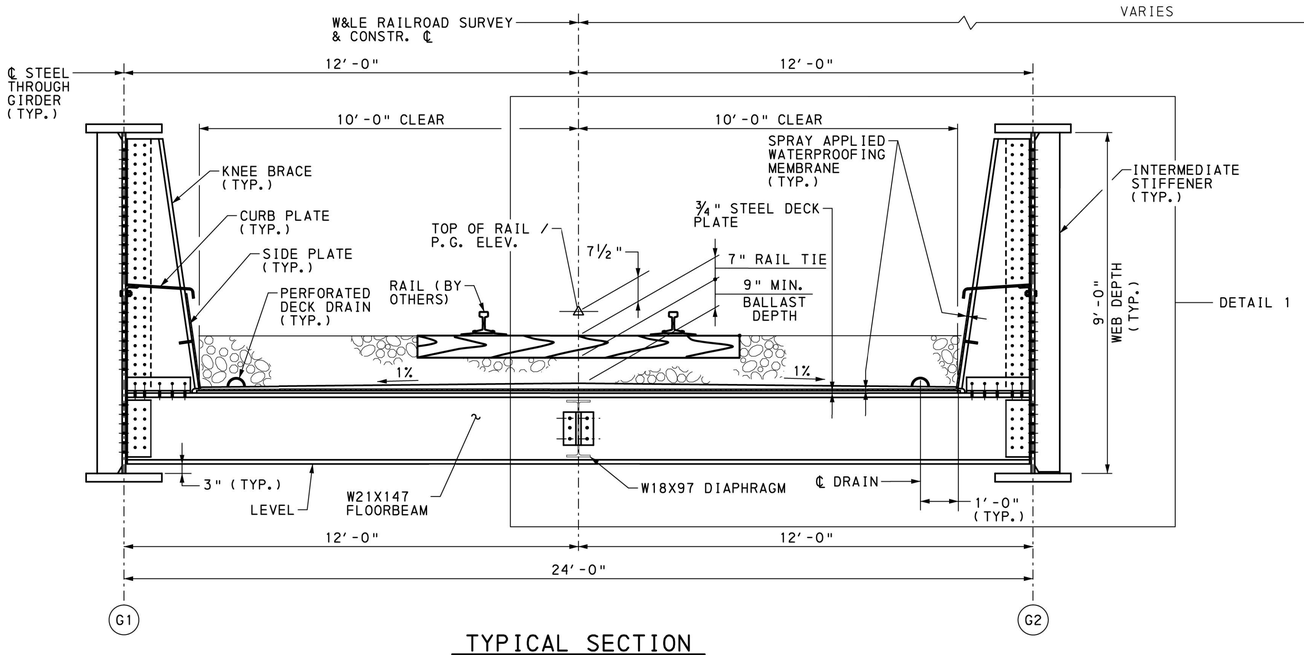

TYPICAL SECTION

1′ 0 1′ 2′

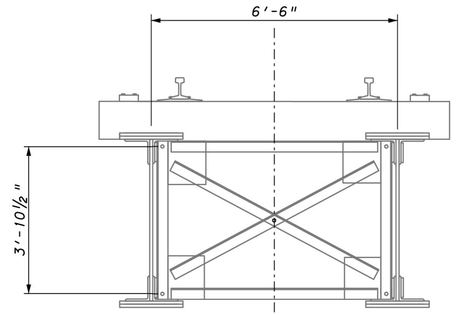

EXISTING TYPICAL SECTION

1′ 0 1′ 2′

INDEX OF DRAWINGS

SHEET NO.	TITLE
1	GENERAL PLAN & ELEVATION
2	TYPICAL SECTION
3	SUMMARY OF QUANTITIES
4	GENERAL NOTES
5	CONSTRUCTION STAGE 1 PLAN
6	CONSTRUCTION STAGE 2 PLAN
7	STAKE-OUT PLAN
8	ABUTMENT 1 FOOTING PLAN
9	ABUTMENT 1 PLAN
10	ABUTMENT 1 ELEVATION
11	ABUTMENT 1 SECTIONS
12	WING A
13	WING B
14	ABUTMENT 1 BAR SCHEDULE - STAGE 1
15	ABUTMENT 1 BAR SCHEDULE - STAGE 2
16	ABUTMENT 2 FOOTING PLAN
17	ABUTMENT 2 PLAN
18	ABUTMENT 2 ELEVATION
19	ABUTMENT 2 SECTIONS
20	WING C
21	WING D
22	ABUTMENT 2 BAR SCHEDULE - STAGE 1
23	ABUTMENT 2 BAR SCHEDULE - STAGE 2
24	BEARING LOCATION PLAN & NOTES
25	FIXED BEARING DETAILS
26	EXPANSION BEARING DETAILS
27	FRAMING PLAN
28	GIRDER ELEVATION
29	GIRDER DETAILS 1
30	GIRDER DETAILS 2
31	DECK PLATE PLAN
32	DECK DETAILS 1
33	DECK DETAILS 2
34	BORING LOCATION PLAN
35-42	CORE BORINGS
43	LABORATORY TEST SUMMARY 1
44	LABORATORY TEST SUMMARY 2

CERTIFIED CORRECT PLANS
Professional Engineer
Approved by Bureau of Technical Utility Services
PA PUBLIC UTILITY COMMISSION
ATTEST
Secretary

NOTES:

1. WHEELING & LAKE ERIE RAIL ROAD TO FURNISH AND PLACE BALLAST, AND FURNISH AND INSTALL TIES AND RAILS.
2. PLACE WATERPROOFING MEMEBRANE TO PROVIDE A 1.0% TRANSVERSE SLOPE FROM THE BRIDGE CENTERLINE TO THE DECK DRAIN LOCATION.
3. PLACE WATERPROOFING MEMEBRANE TO PROVIDE A 1.0% TRANSVERSE SLOPE FROM BASE OF THE SIDE PLATE TO THE DECK DRAIN LOCATION.
4. FOR DETAIL 1, SEE SHEET 30.

Mark	Description	By	Chk'd.	Recm'd.	Date
REVISIONS					

S.R. 0051 PREVIOUSLY KNOWN AS L.R. 288

COMMONWEALTH OF PENNSYLVANIA
DEPARTMENT OF TRANSPORTATION

WESTMORELAND COUNTY
S.R. 0070 SECTION E10
SEGMENT 40/41 OFFSET 1725/1692 (NB/SB)
WHEELING & LAKE ERIE RAILROAD (MP C-17.01)
OVER S.R. 0051 STATION 782+91.42
SINGLE SPAN THROUGH GIRDER BRIDGE
TYPICAL SECTION

COMMONWEALTH OF PENNSYLVANIA — REGISTERED PROFESSIONAL — CHRISTOPHER T. VOLLMER — ENGINEER NO PE-0683

RECOMMENDED February 3rd, 2022

SHEET 2 OF 44

DES: CJP | DWN: CJP | CHK: CTV

pw:\\gfnet-pw.bentley.com:gfnet-pw-01\Documents\Projects\61636\INPUT\COMP_01\CIVIL\BRDG\W&LE RR BRIDGE\SHT02_TYPICAL SECTION.dgn
1/4/2022 2:52:45 PM

APPROXIMATE QUANTITIES - BRIDGE STRUCTURE, AS DESIGNED

ITEM NO.	ITEM	UNIT	STAGE 1		STAGE 2		SUPERST.	TOTAL
			ABUT. 1	ABUT. 2	ABUT. 1	ABUT. 2		
8120-0001	BRIDGE STRUCTURE, AS DESIGNED, W&LE RAILROAD *	LS						LS
(1)	CLASS 3 EXCAVATION	CY	1516	1369	594	232		3711
(1)	NO. 57 COARSE AGGREGATE	CY	132	91	19	38		280
(1)	NO. 2A COARSE AGGREGATE	CY	1516	1037	95	296		2944
(1)	EMBANKMENT MATERIAL	CY	762	474	660	196		2092
(1)	GEOTEXTILE, CLASS 1	SY	179	107	40	76		402
(1)	8" STRUCTURE FOUNDATION DRAIN	LF	73	44	12	25		154
(1)	8" DIA. P.V.C. PIPE (SCHEDULE 40)	LF	20	-	23	-		43
(1)	CAST-IN-PLACE CONCRETE * (5)(6)	CY	486	334	52	123		995
(1)	STEEL HP14X89 TEST PILE (3)	LS	1 @ 49'	1 @ 58'	1 @ 41'	1 @ 58'		LS
(1)	PROTECTIVE COATING FOR REINFORCED CONCRETE SURFACES (PENETRATING SEALERS, REINFORCED CONCRETE SUBSTRUCTURE SURFACES)	SY	228	133	30	73		464
(1)	MEMBRANE WATERPROOFING * (4)	SY					331	331
(1)	FABRICATED STRUCTURAL STEEL *	LBS					465975	465975
(1)	THROUGH GIRDER BEARINGS, FIXED (2)	EACH					2	2
(1)	THROUGH GIRDER BEARINGS, EXPANSION (2)	EACH					2	2
(1)	HALF-CIRCLE PERFORATED DECK DRAIN	LF					251	251
1002-0053	REINFORCEMENT BARS, EPOXY COATED	LBS	36000	28600	2900	8900		76400
1002-0140	MECHANICAL SPLICE SYSTEM FOR NO. 5 REINFORCEMENT BARS, EPOXY COATED	EACH	50					50
1002-0142	MECHANICAL SPLICE SYSTEM FOR NO.6 REINFORCEMENT BARS, EPOXY COATED	EACH	27					27
1005-1841	STEEL HP14X89 PRODUCTION PILE	LF	1808	1611	203	460		4082
1005-1941	STEEL HP14x89 PILE TIP REINFORCEMENT (NORMAL DUTY)	EACH	47	35	6	10		98
5018-0001	REMOVAL OF EXISTING BRIDGE - W&LE RAILROAD *	LS						LS
9000-0930	DYNAMIC PILE TESTING	EACH	1	1	1	1		4
9203-0105	TEMPORARY EXCAVATION SUPPORT AND PROTECTION * SYSTEM	LS						LS

(1) ITEMS IN BRIDGE STRUCTURE LUMP SUM 8120-0001 ARE GIVEN FOR INFORMATION ONLY.

(2) QUANTITY FOR BEARINGS INCLUDES ANCHOR BOLTS

(3) INCLUDES PILE TIPS FOR ALL TEST PILES.

(4) INCLUDES SUPERSTRUCTURE SPRAY APPLIED WATERPROOFING MEMBRANE AND OTHER INCIDENTAL MATERIAL.

(5) INCLUDES ASPHALT PRIMER AND ASPHALT DAMP PROOFING OF CONCRETE SURFACE IN CONTACT WITH BACKFILL OR EMBANKMENT. ALSO INCLUDES WATERPROOF MEMBRANE AND POLYSTYRENE MATERIAL AT ABUTMENT / WING AND FOOTING / STEM INTERFACE.

(6) INCLUDES GALVANIZED STEEL PLATE AND STUDS EMBEDDED IN BACKWALL.

* SEE CONTRACT SPECIAL PROVISIONS

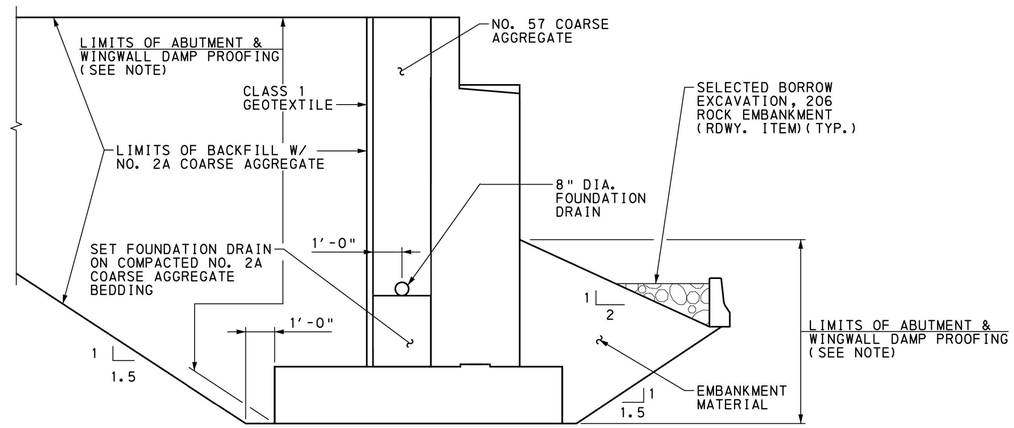

ABUTMENT / WING BACKFILL DETAIL

(ABUTMENT SHOWN - WING SIMILAR)
NOT TO SCALE

NOTE: APPLY ASPHALT PRIMER AND ASPHALT DAMP PROOFING TO ABUTMENT AND WINGWALL CONCRETE IN CONTACT WITH BACKFILL OR EMBANKMENT MATERIAL.

CERTIFIED CORRECT PLANS
Professional Engineer
Approved by Bureau of Technical Utility Services
PA PUBLIC UTILITY COMMISSION
ATTEST Secretary

Mark	Description	By	Chk'd.	Recm'd.	Date
REVISIONS					

S.R. 0051 PREVIOUSLY KNOWN AS L.R. 288

COMMONWEALTH OF PENNSYLVANIA
DEPARTMENT OF TRANSPORTATION

WESTMORELAND COUNTY
S.R. 0070 SECTION E10

SEGMENT 40/41 OFFSET 1725/1692 (NB/SB)
WHEELING & LAKE ERIE RAILROAD (MP C-17.01)
OVER S.R. 0051 STATION 782+91.42

SINGLE SPAN THROUGH GIRDER BRIDGE
SUMMARY OF QUANTITIES

COMMONWEALTH OF PENNSYLVANIA
REGISTERED PROFESSIONAL
CHRISTOPHER T. VOLLMER
ENGINEER NO PE-068383

RECOMMENDED February 3rd, 2022

SHEET 3 OF 44

DES: CJP | DWN: CJP | CHK: CTV

pw:\\gfnet-pw.bentley.com:gfnet-pw-01\Documents\Projects\61636\INPUT\COMP_01\CIVIL\BRDG\W&LE RR BRIDGE\SHT03_QUANTITIES.dgn
1/4/2022 2:52:47 PM

GENERAL NOTES

1. PROVIDE MATERIAL AND WORKMANSHIP IN ACCORDANCE WITH SPECIFICATIONS PUBLICATION 408/2020, ANSI/AASHTO/AWS D1.5 BRIDGE WELDING CODE/2015 AND CONTRACT SPECIAL PROVISIONS. (USE ANSI/AASHTO/AWS D1.1-2015 FOR WELDING NOT COVERED IN ANSI AASHTO/AWS D1.5-2015)

2. DESIGN SPECIFICATIONS:

   A.R.E.M.A. MANUAL FOR RAILWAY ENGINEERING, 2020 AS SUPPLEMENTED BY NORFOLK SOUTHERN PUBLIC PROJECTS MANUAL, 2015.

   LIVE LOAD DISTRIBUTION TO THROUGH GIRDERS IS BASED UPON SIMPLE BEAM METHOD.

   DESIGN IS IN ACCORDANCE WITH THE ALLOWABLE STRESS METHOD FOR STRUCTURAL STEEL AND THE LOAD FACTOR METHOD FOR REINFORCED CONCRETE.

3. DESIGN LIVE LOADS:

   (BASED ON A.R.E.M.A. MANUAL FOR RAILWAY ENGINEERING, 2020)

   SUPERSTRUCTURE - THE GREATER OF COOPER E-80 LIVE LOAD OR THE ALTERNATIVE LIVE LOAD OF 4 AXLES, 100,000 LBS. EACH, SPACED AT 5 FT. - 6 FT. - 5 FT., WITH DIESEL LOCOMOTIVE IMPACT.

   SUBSTRUCTURE - COOPER E-80 LIVE LOAD WITH DIESEL LOCOMOTIVE IMPACT.

   DESIGN SPEED: 40 MPH (FRA CLASS 3 TRACK)

   FATIGUE DESIGN:

   - TRANSVERSE FLOORBEAMS AND DECK PLATE > 2,000,000 CYCLES
   - THROUGH GIRDER (FRACTURE CRITICAL) = 2,000,000 CYCLES

4. DEAD LOADS:

   INCLUDES THE WEIGHT OF AN ADDITIONAL 6" OF BALLAST TO ACCOUNT FOR FUTURE TRACK SURFACING.

5. GENERAL:

   PROVIDE 2" CONCRETE COVER FOR REINFORCEMENT BARS EXCEPT AS NOTED.

   CHAMFER EXPOSED CONCRETE EDGES ¾" INCH X ¾" INCH EXCEPT AS NOTED.

   USE 4000 PSI CEMENT CONCRETE IN SUBSTRUCTURES AND FOUNDATIONS.

   A HIGHER CLASS OF CONCRETE MAY BE SUBSTITUTED FOR A LOWER CLASS OF CONCRETE AT NO ADDITIONAL COST TO THE DEPARTMENT.

   THE MINIMUM CEMENT CONTENT FOR CAST-IN-PLACE CONCRETE SHALL CONTAIN A MINIMUM OF 6.5 BAGS OF CEMENT PER CUBIC YARD. FLY ASH AND OTHER ADMIXTURES (IF APPROVED BY WHEELING AND LAKE ERIE RAILROAD) SHALL BE IN ADDITION TO, AND NOT IN LIEU OF THE CEMENT CONTENT.

   PROVIDE GRADE 60 REINFORCING STEEL BARS THAT MEET THE REQUIREMENTS OF ASTM A615, A996 OR A706. DO NOT WELD GRADE 60 REINFORCING STEEL BARS UNLESS SPECIFIED. DO NOT USE RAIL STEEL A996 REINFORCEMENT BARS IN REINFORCED CEMENT CONCRETE OR WHERE BENDING OR WELDING THE REINFORCING BARS IS INDICATED.

   EPOXY COATED ALL REINFORCING BARS.

   GALVANIZED REINFORCING BARS MAY BE SUBSTITUTED FOR EPOXY-COATED REINFORCING STEEL BARS AT NO ADDITIONAL COST TO THE DEPARTMENT.

   PROVIDE MINIMUM EMBEDMENT AND SPLICE LENGTHS IN ACCORDANCE WITH STANDARD DRAWING BC-736M, UNLESS OTHERWISE INDICATED.

   WELDING OF THE REINFORCEMENT BARS DURING FABRICATION OR CONSTRUCTION IS NOT PERMITTED UNLESS SPECIFIED.

   RAKE FINISH ALL HORIZONTAL CONSTRUCTION JOINTS EXCEPT AS INDICATED.

   DESIGN SEISMIC FORCES USED AN ACCELERATED COEFFICIENT OF 0.05 FOR A 100 YEAR RETURN PERIOD FOR ABUTMENT DESIGN AND 0.04 FOR A 475 RETURN PERIOD FOR BEARING DESIGN.

   VERIFY ALL DIMENSIONS AND GEOMETRY OF THE EXISTING STRUCTURE IN THE FIELD AS NECESSARY FOR PROPER FIT OF THE PROPOSED CONSTRUCTION.

   PLACE BACKWALL CONCRETE AFTER SUPERSTRUCTURE FRAMING IS SET IN POSITION.

   ALL DIMENSIONS ARE HORIZONTAL EXCEPT AS NOTED.

   ALL DIMENSIONS SHOWN ARE FOR A NORMAL TEMPERATURE OF 68° F.

   COORDINATE WORK WITH THE RAILROAD. THE RAILROAD TO FURNISH AND PLACE BALLAST, AND FURNISH AND INSTALL TIES AND RAILS.

6. STRUCTURAL STEEL NOTES:

   PROVIDE STRUCTURAL STEEL CONFORMING TO ASTM A709 GRADE 50-F2FOR FRACTURE CRITICAL MEMBERS AND ASTM A709 GRADE 50-T2 FOR ALL OTHER MEMBERS UNLESS NOTED.

   IMPACT TESTING IS REQUIRED FOR ALL STRUCTURAL STEEL IN ACCORDANCE WITH A.R.E.M.A. TABLE 15-9-3 FOR FCM MEMBERS AND TABLE 15-9-2 FOR NON-FCM MEMBERS.

   NO GIRDER FIELD SPLICES ARE PERMITTED. GIRDERS ARE TO BE FABRICATED AND SHIPPED FULL LENGTH WITHOUT SPLICES.

   ALL FASTENERS ARE ⅞" ø ASTM A325 BOLTS EXCEPT AS NOTED. HOT-DIPPED GALVANIZED BOLTS ARE NOT PERMITTED.

   PREPARE BEARING AREA AS SPECIFIED IN PENNDOT PUBLICATION 408, SECTION 1001.3(K)9.

   DO NOT USE ADHESIVE ANCHORS IN TENSION APPLICATION FOR PERMANENT INSTALLATIONS.

   DO NOT USE ADHESIVE ANCHORS IN A SUSTAINED TENSION APPLICATION FOR TEMPORARY INSTALLATIONS, INCLUDING DURING CONSTRUCTION.

   DO NOT MAKE WELDS BY MANUAL SHIELDED METAL ARC PROCESS FOR PRIMARY GIRDER WELDS, SUCH AS FLANGE TO WEB OR FOR SHOP SPLICES OF WEB AND FLANGES.

   PROVIDE WELDED STUD SHEAR CONNECTORS MANUFACTURED FROM STEEL CONFORMING TO ASTM A 108.

   SET ANCHOR BOLTS TO TEMPLATE OR IN PREFORMED HOLES. DO NOT DRILL UNLESS SPECIFICALLY INDICATED ON PLANS. FILL THE PREFORMED HOLES WITH NON-SHRINK GROUT. FILL THE CLEARANCE BETWEEN ANCHOR BOLTS AND HOLES IN MASONRY PLATES WITH APPROVED NON-HARDENING CAULKING COMPOUND CONFORMING TO PENNDOT PUBLICATION 408, SECTION 705.8.

   PAINT FABRICATED STRUCTURAL STEEL IN ACCORDANCE WITH SPECIFICATIONS FOR SHOP FABRICATED BRIDGE STEEL #02-15A INORGANIC ZINC-ACRYLIC SYSTEM - TOP COAT COLOR TO BE GRAY, SEE SPECIAL PROVISIONS.

   PROVIDE CHARPY V-NOTCH (CVN) TESTING FOR ZONE 2 IN ACCORDANCE WITH A.R.E.M.A. MANUAL FOR RAILWAY ENGINEERING AS SUPPLEMENTED BY SPECIFICATIONS FOR FABRICATED STRUCTURAL STEEL. TEST THE FOLLOWING COMPONENTS SUBJECT TO TENSILE STRESS IN ACCORDANCE WITH THESE REQUIREMENTS:

   (A) THROUGH GIRDERS: WEBS (FCM)
   FLANGES IN TENSION ZONES (FCM)
   STIFFENERS (FCM)
   (B) FLOORBEAMS (FCM) AND FLOORBEAM-TO-THROUGH GIRDER CONNECTION ANGLES (FCM)
   (C) LONGITUDINAL DIAPHRAGMS AND DIAPHRAGM-TO-FLOORBEAM CONNECTION ANGLES
   (D) DECK PLATE

   EXCLUDE THREADS FROM SHEAR PLANES FOR ALL FASTENERS.

   PROVIDE CLASS B SLIP CRITICAL BOLTED CONNECTIONS AT ALL LOCATIONS, UNLESS NOTED OTHERWISE.

   PROVIDE A SURFACE FINISH ON ALL COPED STRUCTURAL STEEL TO A MINIMUM ROUGHNESS TOLERANCE OF 250 MICRO-INCHES.

7. WELDING NOTES:

   WELDING SPECIFICATIONS: ANSI/AASHTO/AWS D1.5 BRIDGE WELDING CODE/2015 AND THE CONTRACT SPECIAL PROVISIONS. DO NOT FIELD WELD ON ANY PART OF THE BRIDGE, EXCEPT WHERE SHOWN ON THE DRAWINGS, WITHOUT PRIOR APPROVAL OF THE REPRESENTATIVE AND WHEELING & LAKE ERIE RAILROAD. FIELD WELD IS ONLY ALLOWED FOR THE ADJOINING DECK PLATES AND MINOR CONNECTIONS NOT SUBJECTED TO LIVE LOAD FORCE.

   WELDING OF STRUCTURAL STEEL: USE ONLY THE SHIELDED METAL ARC PROCESS (EXCEPT AS NOTED) OR THE SUBMERGED ARC WELDING PROCESS AND E-70XX LOW HYDROGEN ELECTRODES WHICH ARE COMPATIBLE WITH THE BASE METAL AS SPECIFIED AND USE OF ELECTRODE HEATING UNITS PER AWS SPECIFICATIONS. FOR MEMBERS DESIGNATED AS SHOWN FCM THE SUBMERGED ARC WELDING PROCESS IS TO BE USED.

   WELD INSPECTION IS TO BE IN ACCORDANCE FABRICATED STRUCTURAL STEEL SPECIFICATION.

   MAKE TACK WELDS WITH THE SAME TYPE OF ELECTRODES, AND INCORPORATE IN THE FINAL WELD. NO OTHER TACK WELDING WILL BE PERMITTED.

   DO NOT WELD WHEN SURFACES ARE MOIST OR EXPOSED TO RAIN OR WIND, OR WHEN WELDERS ARE EXPOSED TO INCLEMENT CONDITIONS THAT WILL ADVERSELY AFFECT THE QUALITY OF THE WORK.

   DO NOT WELD OR BURN WHEN THE TEMPERATURE IS BELOW 0 DEGREES F. PREHEAT AND MAINTAIN THE TEMPERATURE OF THE METAL TO AT LEAST 70 DEGREES F WHEN THE TEMPERATURE OF THE METAL IS BETWEEN 0 DEGREES F AND 32 DEGREES F DURING WELDING OR BURNING.

   PREHEAT STEEL TO THE SPECIFIED MINIMUM TEMPERATURE FOR A DISTANCE EQUAL TO THE THICKNESS OF THE PART BEING WELDED, BUT NOT LESS THAN 3" IN THE DIRECTION FROM THE POINT OF WELDING.

   REMOVE BY APPLICATION OF HEAT AND MOISTURE PRESENT AT POINT OF WELD. PROVIDE WINDBREAKS FOR PROTECTION FROM DIRECT WIND.

   PRIOR TO PLACING THE WELD, THOROUGHLY CLEAN ALL PORTIONS OF NEW AND EXISTING SURFACES TO RECEIVE WELDS OF ALL FOREIGN MATTER, INCLUDING PAINT FILM, FOR A DISTANCE OF 2 INCHES FROM EACH SIDE OF THE OUTSIDE LINES OF WELD.

8. PILES NOTES:

   SUBMIT PILE HAMMER INFORMATION TO THE DISTRICT GEOTECHNICAL ENGINEER FOR REVIEW AND APPROVAL PRIOR TO STARTING THE PILE DRIVING OPERATION.

   OBTAIN WRITTEN PERMISSION FROM THE DISTRICT GEOTECHNICAL ENGINEER OR STRUCTURAL CONTROL ENGINEER PRIOR TO CUTTING OR SPLICING PILES.

   DO NOT CUT PILE WEB, FLANGES OR FOOTING REINFORCEMENT BAR REPLACEMENT, UNLESS DIRECTED BY THE REPRESENTATIVE.

   USE HP14X89, GRADE 50 STEEL BEAM PILES AT ABUTMENTS 1 AND 2.

   DRIVING METHOD A (CASE 1) IN ACCORDANCE WITH PUBLICATION 408, SECTION 1005.3(B).

   THE ESTIMATED PILE TIP ELEVATIONS ARE PROVIDED FOR INFORMATION ONLY. THE CONTRACTOR SHOULD NOT USE ESTIMATED PILE TIP ELEVATIONS TO DETERMINE THE LENGTHS OF INDIVIDUAL PILES.

   CONTROL PILE DRIVING BY THE WAVE EQUATION ANALYSIS. DRIVE TEST PILES TO ABSOLUTE REFUSAL. THE DISTRICT GEOTECHNICAL ENGINEER SHALL VERIFY, FROM THE TEST PILE DRIVING RESULTS, THE CAPABILITY OF THE PILE HAMMER SELECTED BY THE CONTRACTOR. DRIVE BEARING PILES ELEVATION THAT IS PREDETERMINED BY THE DISTRICT GEOTECHNICAL ENGINEER FROM TEST PILES. THE DISTRICT GEOTECHNICAL ENGINEER SHALL DETERMINE THE ACCEPTABILITY OF THE BEARING PILES THAT ATTAIN ABSOLUTE REFUSAL ABOVE THE PREDETERMINED TIP ELEVATIONS.

   DO NOT DRIVE BEARING PILES UNTIL THE REPRESENTATIVE TEST PILES ARE COMPLETED FOR EACH STAGE OF CONSTRUCTION AND EVALUATED BY THE REPRESENTATIVE.

   DRIVE TWO (2) TEST PILES TO ABSOLUTE REFUSAL AT EACH ABUTMENT (4 TOTAL) PRIOR TO DRIVING OF REPRESENTATIVE BEARING PILES, UNLESS OTHERWISE DIRECTED BY THE REPRESENTATIVE. THE DISTRICT GEOTECHNICAL ENGINEER SHALL VERIFY, FROM THE TEST PILE DRIVING RESULTS, THE CAPABILITY OF THE PILE HAMMER SELECTED BY THE CONTRACTOR. DRIVE BEARING PILES TO A TIP ELEVATION AND A DRIVING RESISTANCE PREDETERMINED BY THE REPRESENTATIVE FROM A WAVE EQUATION ANALYSIS OF THE TEST PILES. THE REPRESENTATIVE SHALL DETERMINE THE ACCEPTABILITY OF THE BEARING PILES WHICH ATTAIN ABSOLUTE REFUSAL ABOVE THE PREDETERMINED TIP ELEVATION.

   BEFORE RE-DRIVING TEST PILES, WARM UP THE HAMMER BY STRIKING A MINIMUM OF 20 BLOWS OF THE HAMMER AT FULL STROKE ON A PRODUCTION PILE WITHIN THE SUBSTRUCTURE UNIT.

   RE-DRIVE TEST PILES TO ABSOLUTE REFUSAL AT LEAST 72 HOURS AFTER INITIAL DRIVING TO EVALUATE PILE RELAXATION. RE-DRIVE TEST PILE TO ABSOLUTE REFUSAL. BASED ON THE RESULTS OF THE TEST PILE RE-DRIVING, THE REPRESENTATIVE WILL DETERMINE THE NEED FOR RE-DRIVING BEARING PILES. IF ANALYSIS OF THE FIRST RE-STRIKE INDICATE PILE TIP RESISTANCE IS STILL GREATER THAN DESIGN LOADS, NO RE-DRIVING OF BEARING LOSS OF RESISTANCE, RE-DRIVING TERMINATION CRITERIA WILL BE DETERMINED FROM THE SUPPLEMENTAL DYNAMIC PILE TESTING REPORTS. IF DIRECTED PERFORM RE-DRIVING OF BEARING PILES TO TERMINATION CRITERIA PROVIDED.

   DRIVE EACH PILE WITH THE BUTT WITHIN 2" IN 10 FEET OR 1 DEGREE FROM VERTICAL OR BATTER INDICATED AND THE AXIS WITHIN 30 DEGREES OF ORIENTATION INDICATED.

   ALL PILES TO BE EQUIPPED WITH TIP REINFORCEMENT IN ACCORDANCE WITH BC-757M.

SUBSTRUCTURE UNIT	PILE TYPE	PILE TIP (NONE/NORMAL/ HEAVY DUTY)	PILE TIP ELEVATION	FACTORED DESIGN LOAD (KIPS)	ULTIMATE PILE CAPACITY AT END OF DRIVING (KIPS)	WEAP OR PDA
ABUTMENT 1	HP14X89					
ABUTMENT 2	HP14X89					

9. UTILITY NOTES:

   COORDINATE, LOCATE, AND CONDUCT ALL WORK RELATED TO PUBLIC AND PRIVATE UTILITIES IN ACCORDANCE WITH PUBLICATION 408/2020, SECTION 105.06 AND 107.12.

10. EXISTING STRUCTURE:

    DO NOT CONSIDER ANY OF THE DATA ON THE EXISTING STRUCTURE SUPPLIED IN THE ORIGINAL DESIGN DRAWINGS OR MADE AVAILABLE TO YOU BY THE DEPARTMENT OR ITS AUTHORIZED AGENTS AS POSITIVE REPRESENTATIONS OF ANY OF THE CONDITIONS THAT YOU WILL ENCOUNTER IN THE FIELD.

    THE INFORMATION SHOWN ON THE PLANS FOR THE EXISTING BRIDGE IS NOT PART OF THE PLANS, PROPOSAL, OR CONTRACT AND IS NOT TO BE CONSIDERED A BASIS FOR COMPUTATION OF THE UNIT PRICES USED FOR BIDDING PURPOSES. THERE IS NO EXPRESSED OR IMPLIED AGREEMENT THAT INFORMATION IS CORRECTLY SHOWN. THE BIDDER IS NOT TO RELY ON THIS INFORMATION, BUT IS TO ASSUME THE POSSIBILITY THAT CONDITIONS AFFECTING THE COST AND/OR QUANTITIES OF WORK TO BE PERFORMED MAY DIFFER FROM THOSE INDICATED.

    THE FOLLOWING EXISTING DRAWINGS ARE INCLUDED FOR REFERENCE ONLY:
    ORIGINAL DESIGN DRAWINGS, DATED 1930

CERTIFIED CORRECT PLANS
Professional Engineer
Approved by Bureau of Technical Utility Services
PA PUBLIC UTILITY COMMISSION
ATTEST Secretary

Mark	Description	By	Chk'd.	Recm'd.	Date
REVISIONS					

S.R. 0051 PREVIOUSLY KNOWN AS L.R. 288

COMMONWEALTH OF PENNSYLVANIA
DEPARTMENT OF TRANSPORTATION

WESTMORELAND COUNTY
S.R. 0070 SECTION E10
SEGMENT 40/41 OFFSET 1725/1692 (NB/SB)
WHEELING & LAKE ERIE RAILROAD (MP C-17.01)
OVER S.R. 0051 STATION 782+91.42
SINGLE SPAN THROUGH GIRDER BRIDGE
GENERAL NOTES

COMMONWEALTH OF PENNSYLVANIA REGISTERED PROFESSIONAL
CHRISTOPHER T. VOLLMER
ENGINEER NO. PE-0683

RECOMMENDED February 3rd, 2022

SHEET 4 OF 44

DES: CJP | DWN: CJP | CHK: CTV

pw:\\gfnet-pw.bentley.com:gfnet-pw-01\Documents\Projects\61636\INPUT\COMP_01\CIVIL\BRDGS\W&LE RR BRIDGE\SHT04_GENERAL NOTES.dgn
1/4/2022 2:52:49 PM

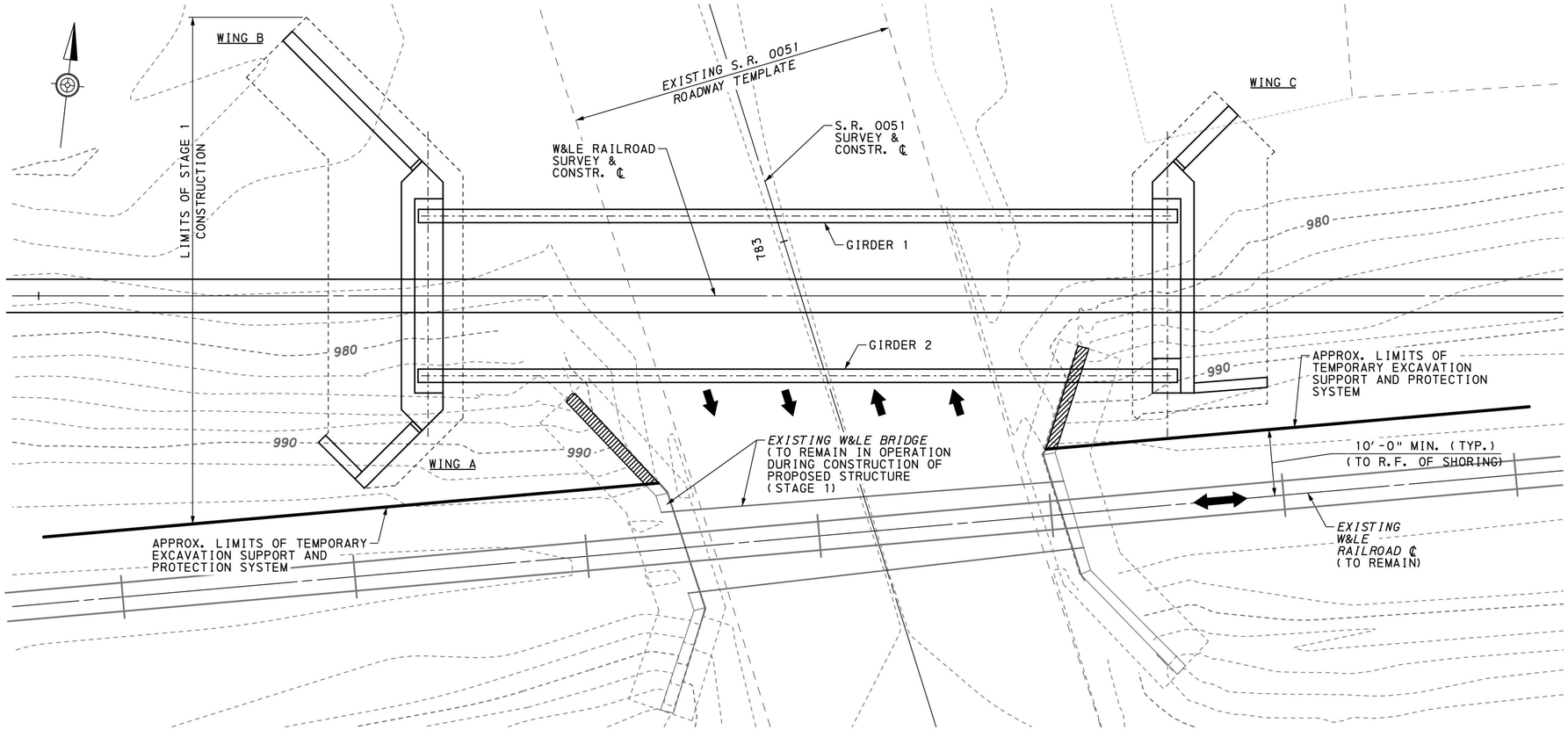

NOTE: REMOVE EXISTING BRIDGE ELEMENTS AS SHOWN IN THEIR ENTIRETY INCLUDING ABUTMENT AND WINGWALL FOOTINGS.

RAILROAD BRIDGE CONSTRUCTION PLAN (STAGE 1) *

5′ 0 5′ 10′

CERTIFIED CORRECT PLANS
Professional Engineer
Approved by Bureau of Technical Utility Services
PA PUBLIC UTILITY COMMISSION
ATTEST Secretary

NOTES:

1. FOR ABUTMENT DRAWINGS, SEE SHEETS 8 THRU 22.
2. FOR FRAMING PLAN, SEE SHEET 27.
3. FOR ADDITIONAL DETAILS, SEE TRAFFIC CONTROL PLANS.

LEGEND:

* - RAILROAD BRIDGE CONSTRUCTION AND DEMOLITION AS SHOWN FOR STAGE 1 IS TO BE COMPLETED AS PART OF PHASE 2 OF THE OVERALL PROJECT PHASING.

— - APPROXIMATE LIMITS OF TEMPORARY EXCAVATION SUPPORT AND PROTECTION SYSTEM

▨ - LIMITS OF REMOVAL

➡ - INDICATES DIRECTION OF ROADWAY TRAFFIC

⟷ - INDICATES DIRECTION OF RAIL TRAFFIC

GENERAL:

1. CONSTRUCTION SEQUENCE:
   a. THE CONSTRUCTION SEQUENCE SHOWN AND DESCRIBED IN THESE DRAWINGS IS A SUGGESTED SEQUENCE. ITS INCLUSION IN THESE DRAWINGS IS NOT TO INFER THAT THIS SEQUENCE OR METHOD IS MANDATED.
   b. SUBMIT A CONSTRUCTION SEQUENCE DETAILING THE SEQUENCE, MEANS, METHODS, ETC. BY WHICH THE BRIDGE WILL BE CONSTRUCTED.
   c. HAVE AN ENGINEER REGISTERED IN THE COMMONWEALTH OF PENNSYLVANIA DIRECT THE PREPARATION OF THE CALCULATIONS, DRAWINGS, DETAILS, ETC. AND SEAL EACH ITEM SUBMITTED.
   d. SUBMIT ITEMS REQUIRED BY THE DEPARTMENT AND RAILROAD, I.E., CALCULATIONS DRAWINGS, SKETCHES, ETC. FOR REVIEW AND ACCEPTANCE.
   e. OBTAIN THE DEPARTMENT'S AND RAILROAD'S APPROVAL OF THE CONSTRUCTION SEQUENCE PRIOR TO BEGINNING WORK ON THE BRIDGE.
   f. THE CONTRACTOR IS FULLY RESPONSIBLE FOR THE CONSTRUCTION SEQUENCE EVEN IF THE SEQUENCE CONTAINED IN THE PLANS IS FOLLOWED.
2. TEMPORARY EXCAVATION SUPPORT AND PROTECTION SYSTEM:
   a. PROVIDE DESIGN AND DETAILING. SEE SPECIAL PROVISIONS (ITEM 9203-0105).
   b. HAVE AN ENGINEER REGISTERED IN THE COMMONWEALTH OF PENNSYLVANIA DIRECT THE PREPARATIONS OF THE CALCULATIONS, DRAWING, DETAILS, ETC. AND SEAL EACH ITEM SUBMITTED.
   c. SUBMIT REQUIRED ITEMS TO THE DEPARTMENT AND RAILROAD FOR REVIEW AND OBTAIN APPROVAL.
   d. PROVIDE FALL PROTECTION RAILING ALONG THE TOP OF THE TEMPORARY EXCAVATION SUPPORT SYSTEM. RAILING IS TO EXTEND THE FULL LENGTH OF THE SHORING. RAILING IS INCIDENTAL TO ITEM 9203-0105.

CONCEPTUAL STAGE 1 RAILROAD BRIDGE CONSTRUCTION SEQUENCE:

1. IMPLEMENT PROJECT PHASE 2 MAINTENANCE PROTECTION OF TRAFFIC PLAN UTILIZING THE EXISTING S.R. 0051 ROADWAY ALIGNMENT.
2. INSTALL STAGE 1 TEMPORARY EXCAVATION SUPPORT AND PROTECTION SYSTEM IN ACCORDANCE WITH SPECIAL PROVISION FOR ITEM 9203-0105.
3. PARTIALLY DEMOLISH THE EXISTING BRIDGE WINGWALLS TO FACILITATE STAGE 1 BRIDGE CONSTRUCTION. REMOVE EXISTING STRUCTURE IN IT'S ENTIRETY INCLUDING THE ABUTMENT FOOTINGS.
4. EXCAVATE EMBANKMENT MATERIAL AS REQUIRED FOR CONSTRUCTION OF STAGE 1 STRUCTURE.
5. INSTALL COLUMN SUPPORTED EMBANKMENT (CSE) ELEMENTS AS PART OF ROADWAY ITEM 9000-0051 PRIOR TO INSTALLATION OF PILE FOUNDATIONS.
6. CONSTRUCT STAGE 1 ABUTMENTS TO BEAM SEAT LEVEL AND CONSTRUCT WINGWALLS B AND C AND PARTIAL WINGWALLS A AND D AS DETAILED.
7. INSTALL THE BRIDGE SUPERSTRUCTURE. WORK ASSOCIATED WITH ERECTION AND ANY TEMPORARY SUPPORTS IS INCIDENTAL TO ITEM 8120-0001.
8. COMPLETE CONSTRUCTION OF ABUTMENT BACKWALLS, CHEEKWALLS AND WINGWALLS.
9. BACKFILL ABUTMENTS AND CONSTRUCT EMBANKMENTS TO BOTTOM OF BALLAST ELEVATION.
10. WHEELING AND LAKE ERIE RAILROAD TO FURNISH AND PLACE BALLAST, AND FURNISH AND INSTALL TIES AND RAILS.

COMMONWEALTH OF PENNSYLVANIA REGISTERED PROFESSIONAL
CHRISTOPHER T. VOLLMER
ENGINEER NO PE-0683

Mark	Description	By	Chk'd.	Recm'd.	Date
REVISIONS					

S.R. 0051 PREVIOUSLY KNOWN AS L.R. 288

COMMONWEALTH OF PENNSYLVANIA
DEPARTMENT OF TRANSPORTATION

WESTMORELAND COUNTY
S.R. 0070 SECTION E10
SEGMENT 40/41 OFFSET 1725/1692 (NB/SB)
WHEELING & LAKE ERIE RAILROAD (MP C-17.01)
OVER S.R. 0051 STATION 782+91.42
SINGLE SPAN THROUGH GIRDER BRIDGE
CONSTRUCTION STAGE 1 PLAN

RECOMMENDED February 3rd, 2022

SHEET 5 OF 44

DES: CJP | DWN: CJP | CHK: CTV

pw:\\gfnet-pw.bentley.com:gfnet-pw-01\Documents\Projects\61636\INPUT\COMP_01\CIVIL\BRDG\W&LE RR BRIDGE\SHT05_CONSTRUCTION PHASING 1.dgn
1/4/2022 2:52:56 PM

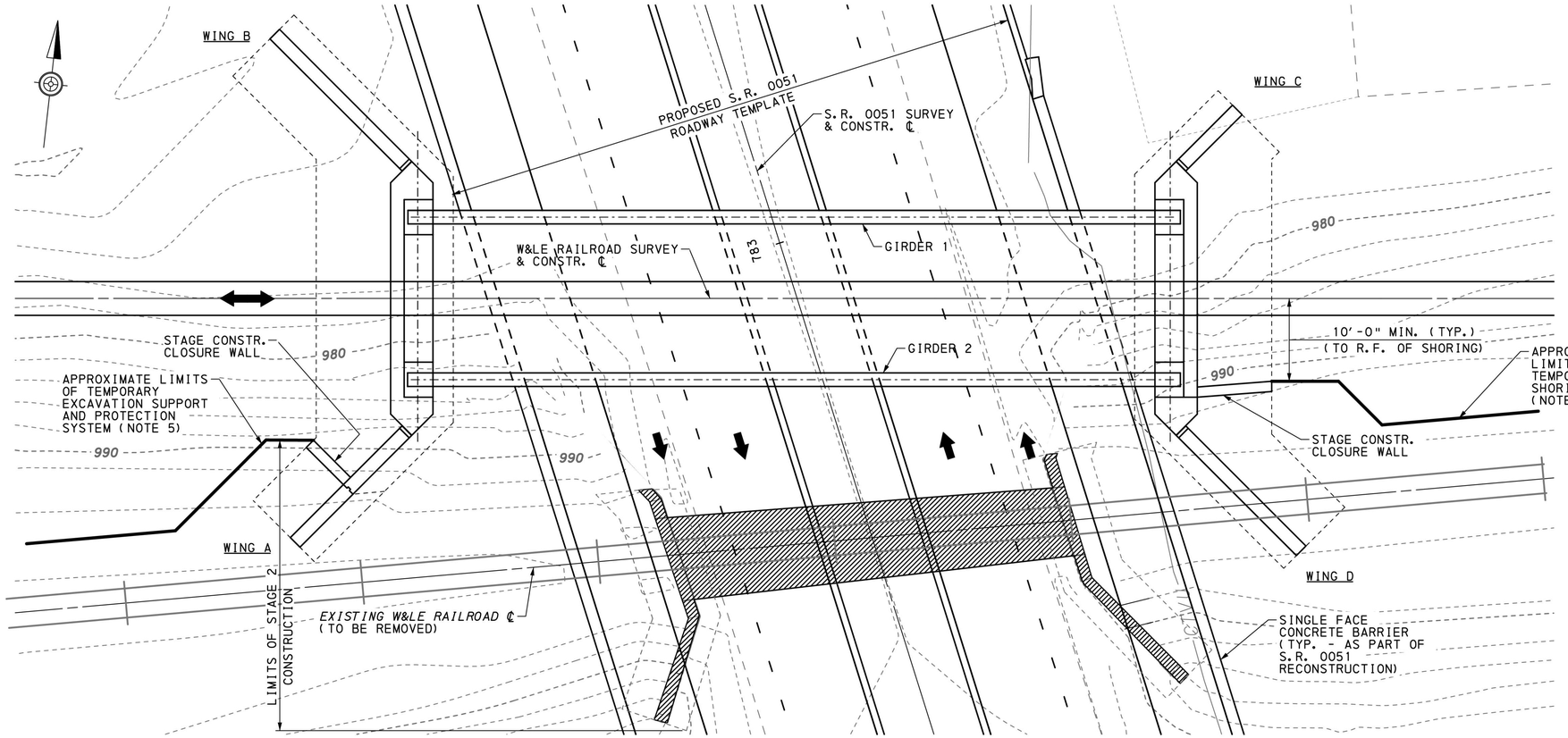

NOTE: REMOVE EXISTING BRIDGE ELEMENTS AS SHOWN IN THEIR ENTIRETY INCLUDING ABUTMENT AND WINGWALL FOOTINGS.

RAILROAD BRIDGE CONSTRUCTION PLAN (STAGE 2) *

5' 0 5' 10'

CONCEPTUAL STAGE 2 RAILROAD BRIDGE CONSTRUCTION SEQUENCE:

1. SHIFT RAILROAD TRAFFIC TO THE NEW RAIL ALIGNMENT.
2. RE-CONFIGURE AND INSTALL STAGE 2 TEMPORARY EXCAVATION SUPPORT AND PROTECTION SYSTEM.
3. REMOVE EXISTING BRIDGE SUPERSTRUCTURE AND REMAINING BRIDGE SUBSTRUCTURE TO FACILITATE S.R. 0051 CONSTRUCTION. NOTE THAT THE EXISTING FOOTINGS CAN BE REMOVED AS PART OF S.R. 0051 ROADWAY RECONSTRUCTION DURING PROJECT PHASES 3 AND 4 AND WOULD BE INCLUDED WITH THE ROADWAY WIDENING EXCAVATION.
4. REMOVE THE REMAINING EMBANKMENT MATERIAL AROUND ABUTMENTS 1 & 2 (ROADWAY ITEM) FOR THE WIDENING OF S.R. 0051.
5. INSTALL COLUMN SUPPORTED EMBANKMENT (CSE) ELEMENTS PRIOR TO INSTALLATION OF PILE FOUNDATIONS.
6. CONSTRUCT REMAINING SECTIONS OF WINGWALLS A AND D.
7. BACKFILL WINGWALLS AND CONSTRUCT EMBANKMENTS.
8. RE-CONSTRUCT S.R. 0051 TO THE PROPOSED TEMPLATE (AS PART OF OVERALL PROJECT PHASES 3 AND 4).

NOTES:

1. FOR ADDITIONAL NOTES, SEE SHEET 5.
2. FOR ABUTMENT DRAWINGS, SEE SHEETS 8 THRU 23.
3. FOR FRAMING PLAN, SEE SHEET 27.
4. FOR ADDITIONAL DETAILS, SEE TRAFFIC CONTROL PLANS.
5. CONFIGURE TEMPORARY EXCAVATION SUPPORT AND PROTECTION SYSTEM TO PROVIDE SUFFICIENT ROOM TO ALLOW INSTALLATION OF BATTERED PILES DURING STAGE 2 CONSTRUCTION.

LEGEND:

* - RAILROAD BRIDGE CONSTRUCTION AND DEMOLITION AS SHOWN FOR STAGE 2 IS TO BE COMPLETED AS PART OF PHASE 2 OF THE OVERALL PROJECT PHASING.

— - APPROXIMATE LIMITS OF TEMPORARY EXCAVATION SUPPORT AND PROTECTION SYSTEM

▨ - LIMITS OF REMOVAL

➡ - INDICATES DIRECTION OF ROADWAY TRAFFIC

⟷ - INDICATES DIRECTION OF RAIL TRAFFIC

Mark	Description	By	Chk'd.	Recm'd.	Date
	REVISIONS				

S.R. 0051 PREVIOUSLY KNOWN AS L.R. 288

CERTIFIED CORRECT PLANS
David A. Hollerich
Professional Engineer
Approved by Bureau of Technical Utility Services
PA PUBLIC UTILITY COMMISSION
ATTEST Secretary

COMMONWEALTH OF PENNSYLVANIA
REGISTERED PROFESSIONAL
CHRISTOPHER T. VOLLMER
ENGINEER NO PE-068183
COMMONWEALTH OF PENNSYLVANIA

COMMONWEALTH OF PENNSYLVANIA
DEPARTMENT OF TRANSPORTATION

WESTMORELAND COUNTY
S.R. 0070 SECTION E10
SEGMENT 40/41 OFFSET 1725/1692 (NB/SB)
WHEELING & LAKE ERIE RAILROAD (MP C-17.01)
OVER S.R. 0051 STATION 782+91.42
SINGLE SPAN THROUGH GIRDER BRIDGE
CONSTRUCTION STAGE 2 PLAN

RECOMMENDED February 3rd, 2022

SHEET 6 OF 44

DES: CJP | DWN: CJP | CHK: CTV

pw:\\gfnet-pw.bentley.com:gfnet-pw-01\Documents\Projects\61636\INPUT\COMP_01\CIVIL\BRDG\W&LE RR BRIDGE\SHT06_CONSTRUCTION PHASING 2.dgn
1/4/2022 2:53:01 PM

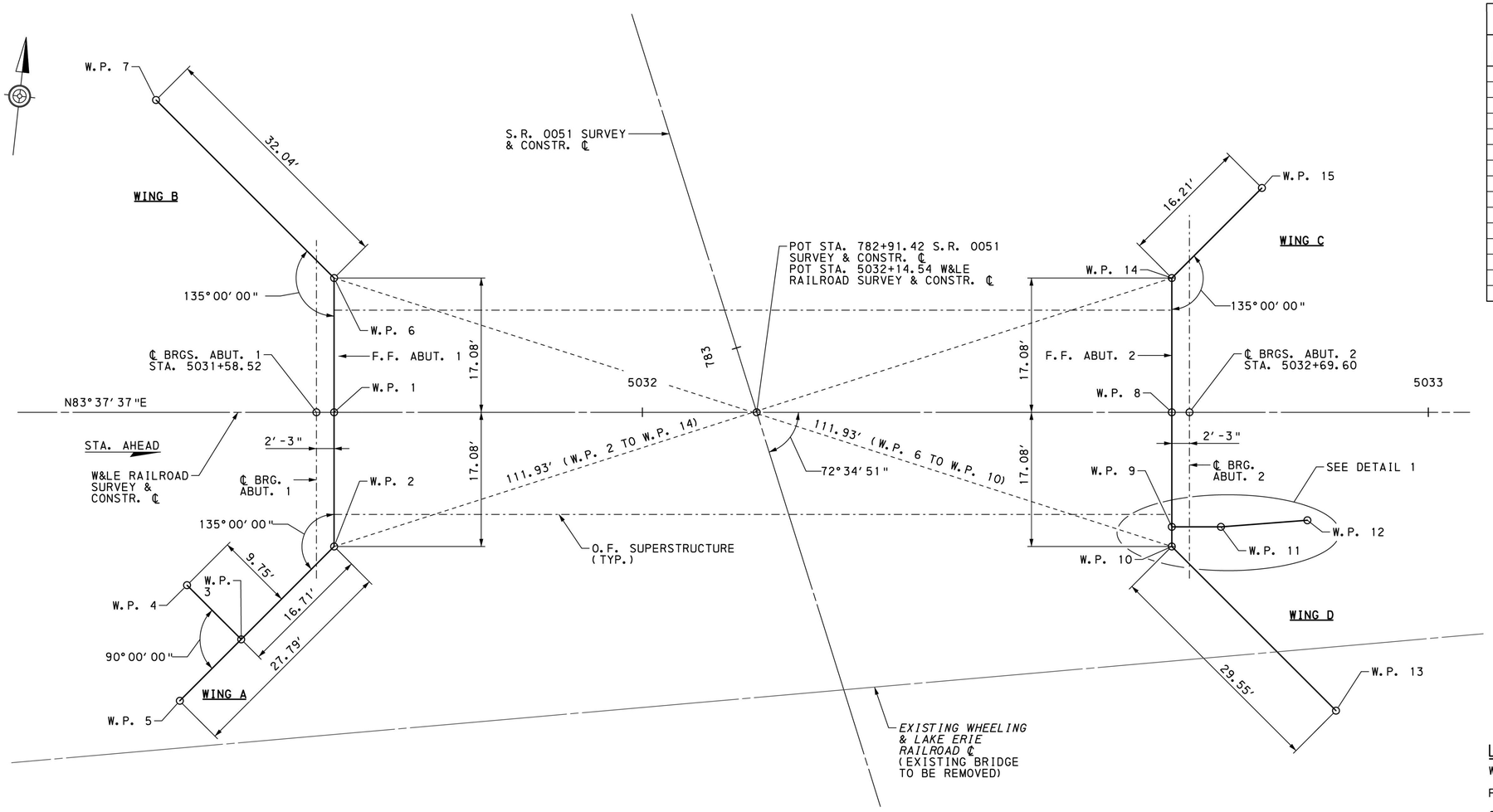

STAKE-OUT PLAN

2' 0 4' 8'

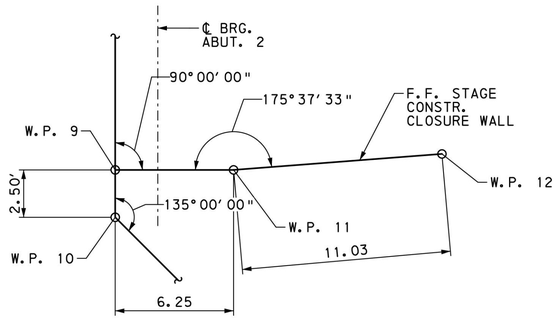

DETAIL 1

2' 0 2' 4'

SUMMARY OF COORDINATES

WORK POINT	W&LE RR CL STATION	OFFSET	COORDINATES	
			NORTH	EAST
1	5031+60.77	0.00	303931.8235	1403000.6242
2	5031+60.77	17.08' RT.	303914.8461	1403002.5204
3	5031+48.95	28.90' RT.	303901.7902	1402992.0880
4	5031+42.06	22.01' RT.	303907.8766	1402984.4710
5	5031+41.12	36.74' RT.	303893.1358	1402985.1726
6	5031+60.77	17.08' LT.	303948.8009	1402998.7279
7	5031+38.11	39.74' LT.	303968.8018	1402973.6974
8	5032+67.36	0.00	303943.6548	1403106.5525
9	5032+67.36	14.58' RT.	303929.1619	1403108.1712
10	5032+67.36	17.08' RT.	303926.6774	1403108.4487
11	5032+73.61	14.58' RT.	303929.8557	1403114.3826
12	5032+84.60	13.62' RT.	303932.0349	1403125.1972
13	5032+88.25	37.98' RT.	303908.2334	1403131.5309
14	5032+67.36	17.08' LT.	303960.6323	1403104.6563
15	5032+78.82	28.55' LT.	303973.2967	1403114.7759

LEGEND:

W.P. WORK POINT
F.F. FRONT FACE
O.F. OUTSIDE FACE

Mark	Description	By	Chk'd.	Recm'd.	Date
REVISIONS					

S.R. 0051 PREVIOUSLY KNOWN AS L.R. 288

CERTIFIED CORRECT PLANS
Professional Engineer
Approved by Bureau of Technical Utility Services
PA PUBLIC UTILITY COMMISSION
ATTEST Secretary

COMMONWEALTH OF PENNSYLVANIA
DEPARTMENT OF TRANSPORTATION

WESTMORELAND COUNTY
S.R. 0070 SECTION E10

SEGMENT 40/41 OFFSET 1725/1692 (NB/SB)
WHEELING & LAKE ERIE RAILROAD (MP C-17.01)
OVER S.R. 0051 STATION 782+91.42
SINGLE SPAN THROUGH GIRDER BRIDGE
STAKE-OUT PLAN

COMMONWEALTH OF PENNSYLVANIA REGISTERED PROFESSIONAL CHRISTOPHER T. VOLLMER ENGINEER NO PE-0683

RECOMMENDED February 3rd, 2022

SHEET 7 OF 44

DES: CJP | DWN: CJP | CHK: CTV

pw:\\gfnet-pw.bentley.com:gfnet-pw-01\Documents\Projects\61636\INPUT\COMP_01\CIVIL\BRDGS\W&LE RR BRIDGE\SHT07_STAKE OUT PLAN.dgn
1/4/2022 2:53:05 PM

PILE LOADS (SERVICE)			
LOCATION	AASHTO LOAD GROUP	AXIAL (KIP/PILE)	
		DESIGN LOAD	ALLOW. CAPACITY
ABUT. 1	GROUP III	256	320
WING A	GROUP III	173	320
WING B	GROUP III	184	320

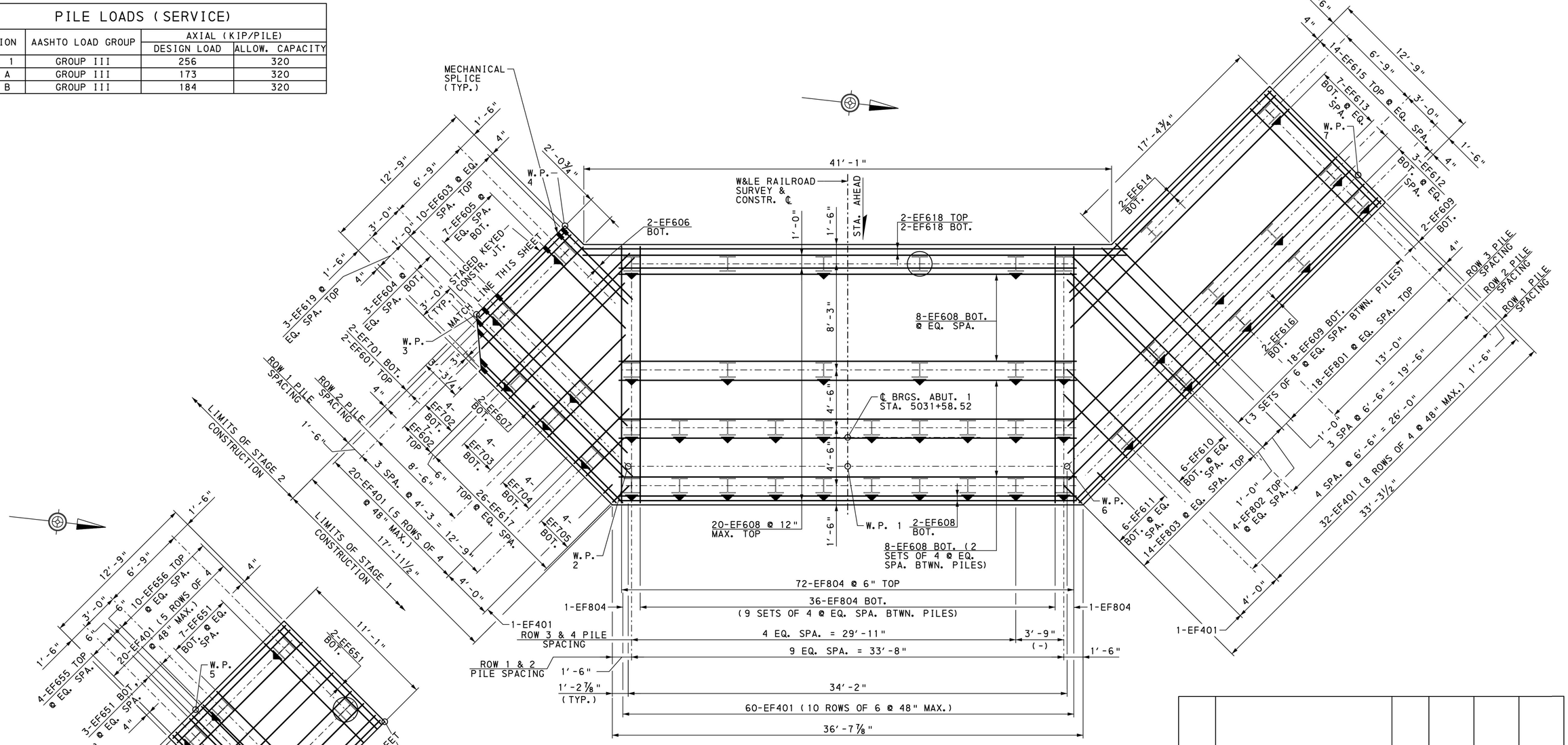

ABUTMENT 1 FOOTING PLAN - STAGE 1

2' 0 2' 4'

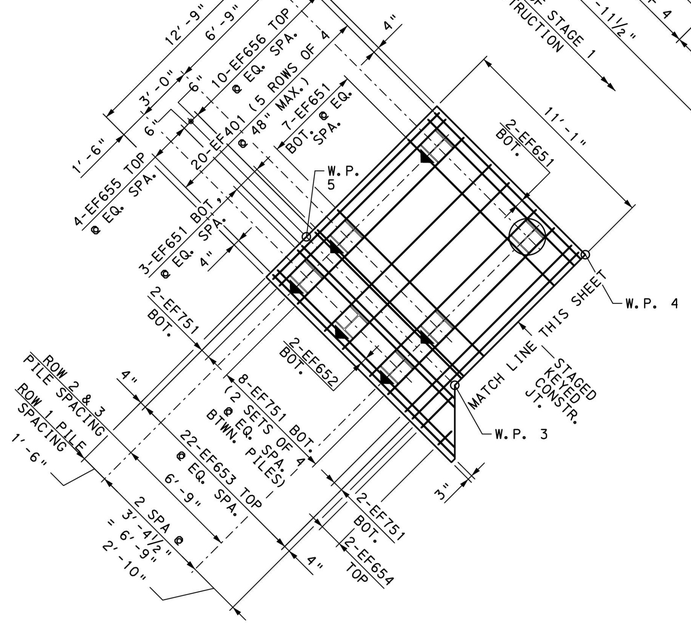

ABUTMENT 1 FOOTING PLAN - STAGE 2

2' 0 2' 4'

LEGEND:

- HP14x89 VERTICAL
- HP14x89 BATTERED
- TEST PILE

CERTIFIED CORRECT PLANS
Professional Engineer
Approved by Bureau of Technical Utility Services
PA PUBLIC UTILITY COMMISSION
ATTEST Secretary

NOTES:

1. FOR STAKE-OUT PLAN, SEE SHEET 7.
2. FOR BAR SCHEDULE, SEE SHEETS 14 & 15.
3. PRIOR TO INSTALLATION OF PILE FOUNDATION INSTALL COLUMN SUPPORTED EMBANKMENT IN ACCORDANCE WITH SPECIAL PROVISION FOR ROADWAY ITEM 9000-0051.

COMMONWEALTH OF PENNSYLVANIA REGISTERED PROFESSIONAL CHRISTOPHER T. VOLLMER ENGINEER NO PE-0683

Mark	Description	By	Chk'd.	Recm'd.	Date
REVISIONS					

S.R. 0051 PREVIOUSLY KNOWN AS L.R. 288

COMMONWEALTH OF PENNSYLVANIA
DEPARTMENT OF TRANSPORTATION

WESTMORELAND COUNTY
S.R. 0070 SECTION E10

SEGMENT 40/41 OFFSET 1725/1692 (NB/SB)
WHEELING & LAKE ERIE RAILROAD (MP C-17.01)
OVER S.R. 0051 STATION 782+91.42
SINGLE SPAN THROUGH GIRDER BRIDGE

ABUTMENT 1 FOOTING PLAN

RECOMMENDED February 3rd, 2022

SHEET 8 OF 44

DES: CJP | DWN: CJP | CHK: CTV

\\gfnet-pw.bentley.com\gfnet-pw-01\Documents\Projects\61636\INPUT\COMP_01\CIVIL\BRDG\W&LE RR BRIDGE\SHT08_ABUT1_FOOTING PLAN.dgn
1/4/2022 2:53:07 PM

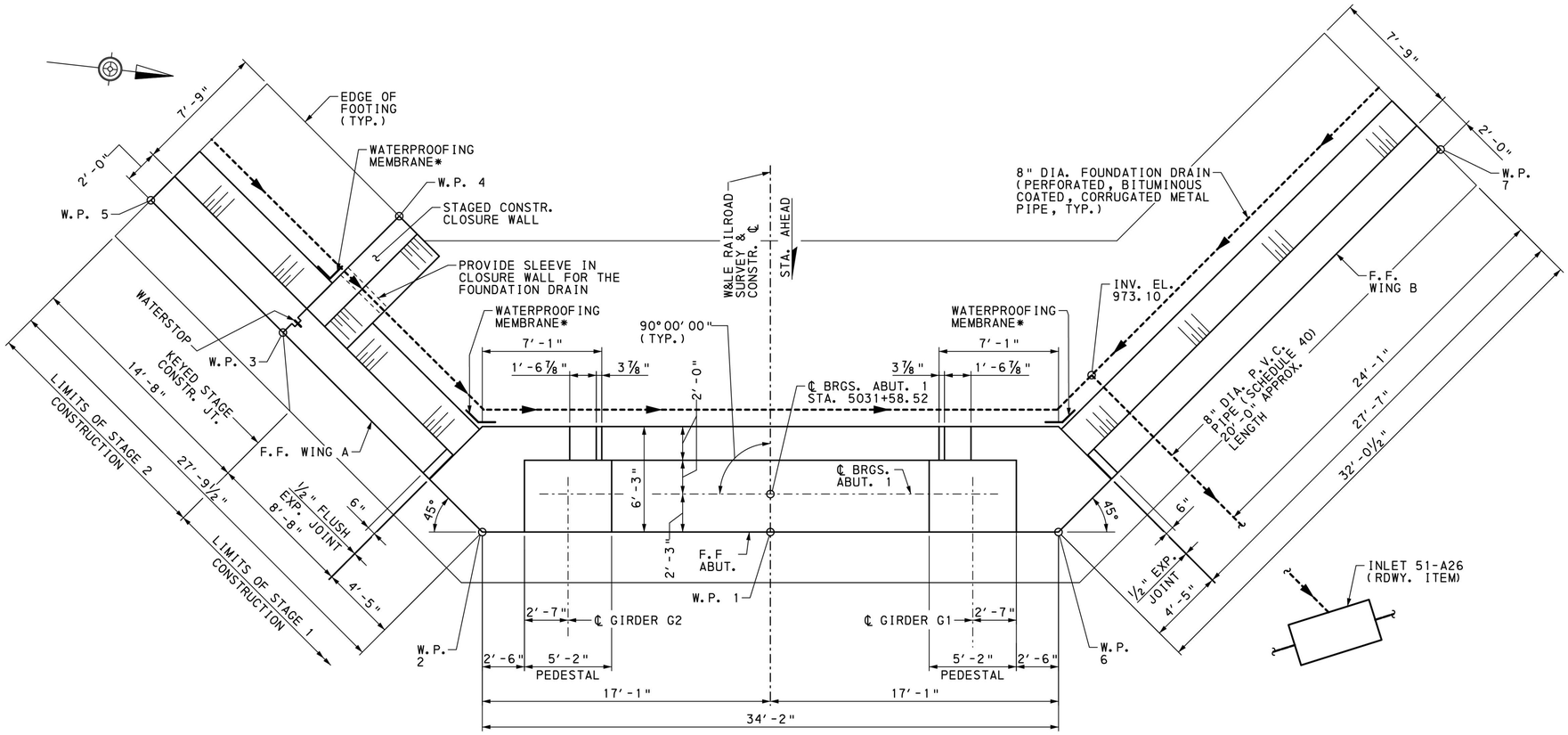

PLAN

2′ 0 2′ 4′

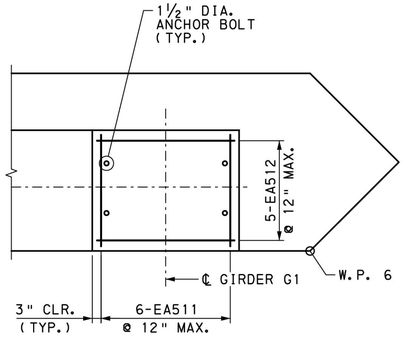

NOTE: PEDESTAL LEVEL IN BOTH DIRECTIONS.

PEDESTAL DETAILS

(GIRDER 1 SHOWN - GIRDER 2 SIMILAR)

1′ 0 1′ 2′ 3′

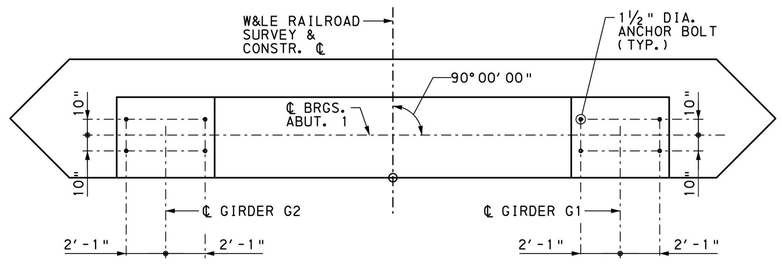

ANCHOR BOLT LAYOUT

2′ 0 2′ 4′

NOTES:

1. WATERSTOP IS INCIDENTAL TO CAST-IN-PLACE CONCRETE.
2. FOR STAKE-OUT PLAN, SEE SHEET 7.
3. FOR BAR SCHEDULE, SEE SHEETS 14 & 15.
4. FOR BEARING DETAILS, SEE SHEETS 24 & 26.

LEGEND:

----→ DIRECTION OF SLOPED FOUNDATION DRAIN. SLOPE ⅛" PER FOOT (MIN.)

* - 2′-0" WIDE PIECE BENT TO FIT ACROSS THE EXPANSION JOINT BETWEEN WING AND ABUTMENT STEMS. USE AN ADHESIVE BACKED, PREFORMED MEMBRANE WATERPROOFING SYSTEM PER PUB. 408, SECTION 680.2(b). MEMBRANE TO RUN CONTINUOUS FROM TOP OF FOOTING TO TOP OF WINGWALL.

Mark	Description	By	Chk'd.	Recm'd.	Date
REVISIONS					

S.R. 0051 PREVIOUSLY KNOWN AS L.R. 288

CERTIFIED CORRECT PLANS
Professional Engineer
Approved by Bureau of Technical Utility Services
PA PUBLIC UTILITY COMMISSION
ATTEST Secretary

COMMONWEALTH OF PENNSYLVANIA
DEPARTMENT OF TRANSPORTATION

WESTMORELAND COUNTY
S.R. 0070 SECTION E10

SEGMENT 40/41 OFFSET 1725/1692 (NB/SB)

WHEELING & LAKE ERIE RAILROAD (MP C-17.01)

OVER S.R. 0051 STATION 782+91.42

SINGLE SPAN THROUGH GIRDER BRIDGE

ABUTMENT 1 PLAN

COMMONWEALTH OF PENNSYLVANIA REGISTERED PROFESSIONAL CHRISTOPHER T. VOLLMER ENGINEER NO PE-068183

RECOMMENDED February 3rd, 2022

SHEET 9 OF 44

DES: CJP | DWN: CJP | CHK: CTV

pw:\\gfnet-pw.bentley.com:gfnet-pw-01\Documents\Projects\61636\INPUTYCOMP_01\CIVIL\BRDG\W&LE RR BRIDGE\SHT09_ABUT1_ PLAN.1.dgn
1/4/2022 2:53:14 PM

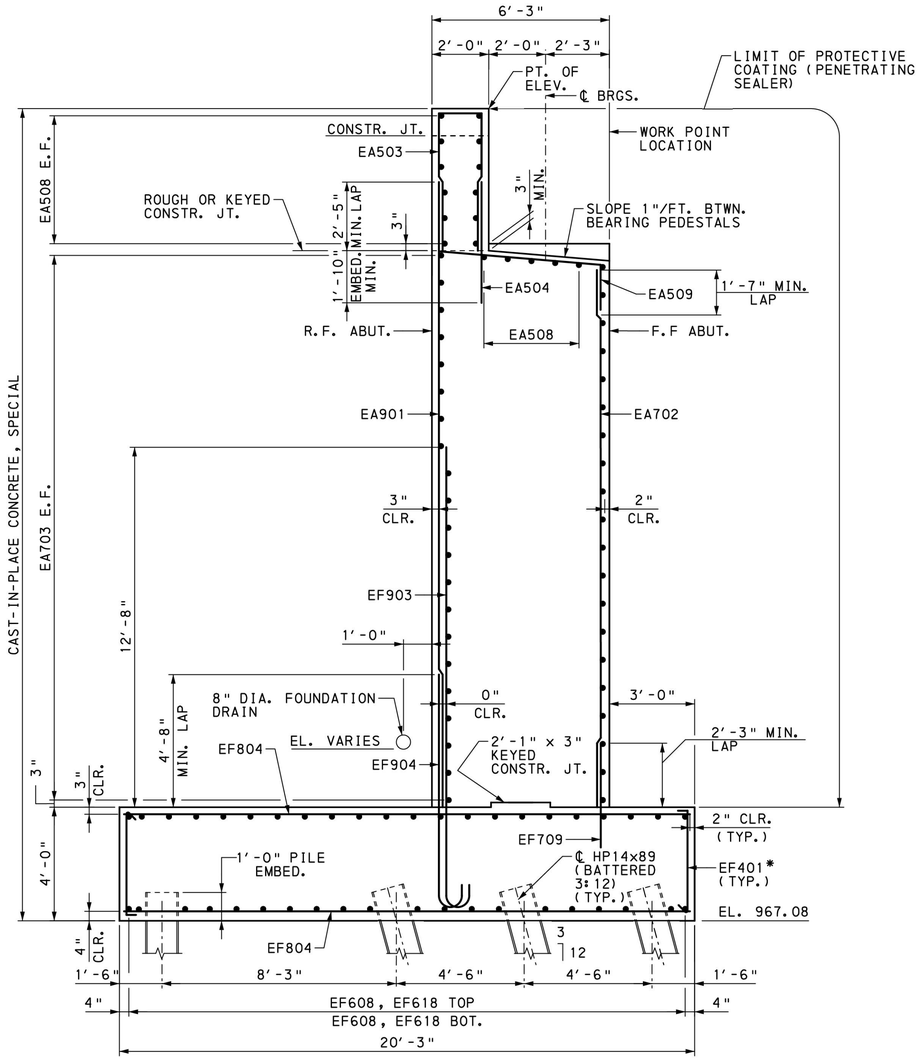

TYPICAL SECTION

1' 0 1' 2' 3'

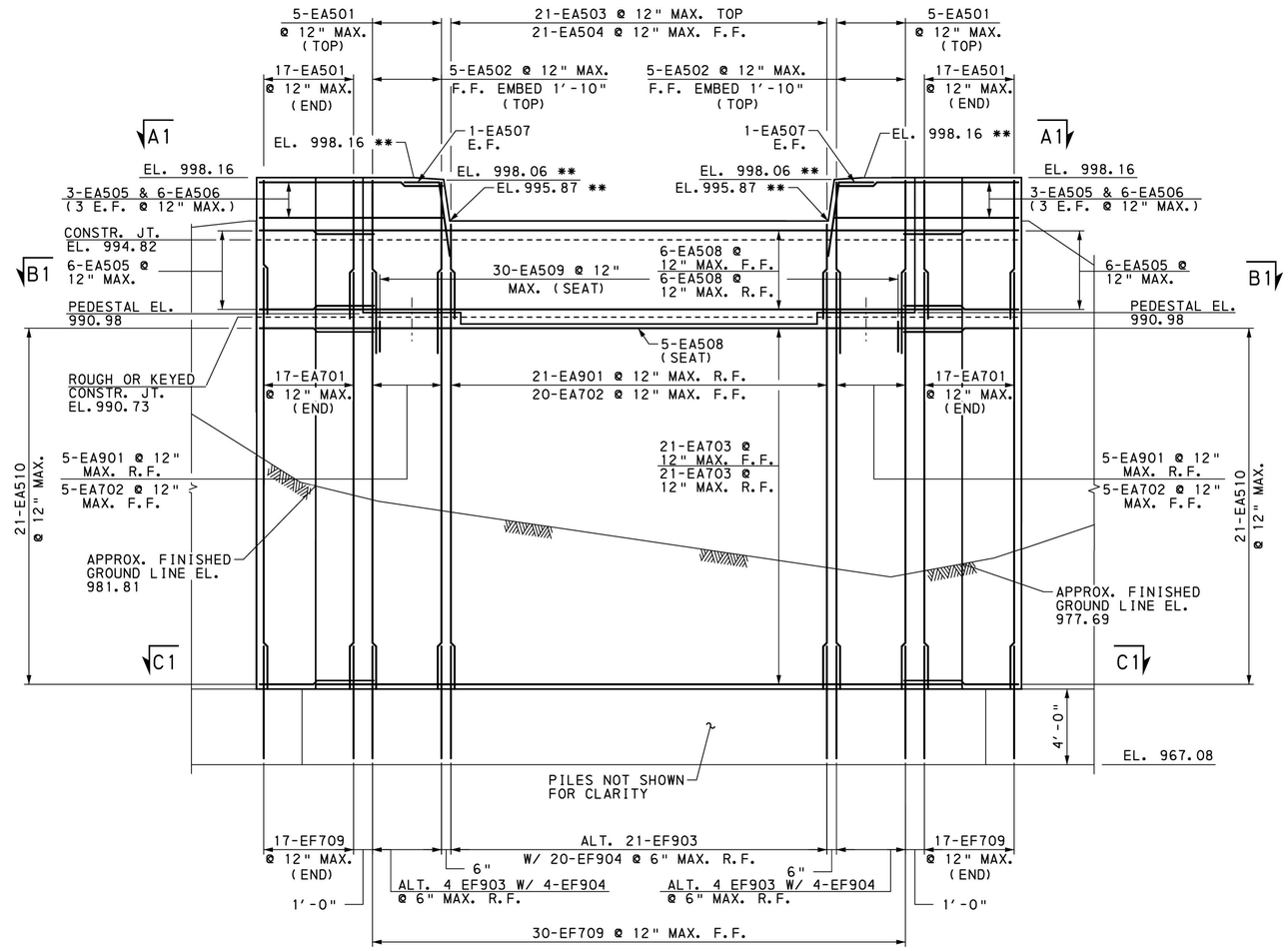

ELEVATION

2' 0 2' 4'

NOTES:

1. FOR BAR SCHEDULE, SEE SHEETS 14 & 15.
2. FOR SECTIONS A1-A1, B1-B1, AND C1-C1, SEE SHEET 11.
3. FOR WATERPROOFING DETAIL AT BASE OF ABUTMENT STEM, SEE SHEET 13.
4. FOR BACKFILL DETAIL, SEE SHEET 3.

FOUNDATION DRAIN NOTE:

1. ENCASE 8" DIA. FOUNDATION DRAIN BEHIND ABUTMENTS & WINGWALL IN CONTINUOUS 2'x2' NO. 57 COARSE AGGREGATE. AGGREGATE TO BE ENCASE IN GEOTEXTILE, CLASS I.

LEGEND:

* EF401 @ 48" MAX. SPACING IN BOTH DIRECTIONS. ALTERNATE 90° AND 135° HOOKS EVERY OTHER TIE.

** ELEVATIONS PROVIDED ARE TO THE TOP OF ¾" EMBEDDED BACKWALL PLATE, SEE SHEET 33 FOR PLATE DETAILS.

CERTIFIED CORRECT PLANS
Professional Engineer
Approved by Bureau of Technical Utility Services
PA PUBLIC UTILITY COMMISSION
ATTEST Secretary

Mark	Description	By	Chk'd.	Recm'd.	Date
REVISIONS					

S.R. 0051 PREVIOUSLY KNOWN AS L.R. 288

COMMONWEALTH OF PENNSYLVANIA
DEPARTMENT OF TRANSPORTATION

WESTMORELAND COUNTY
S.R. 0070 SECTION E10

SEGMENT 40/41 OFFSET 1725/1692 (NB/SB)
WHEELING & LAKE ERIE RAILROAD (MP C-17.01)
OVER S.R. 0051 STATION 782+91.42

SINGLE SPAN THROUGH GIRDER BRIDGE
ABUTMENT 1 ELEVATION

COMMONWEALTH OF PENNSYLVANIA REGISTERED PROFESSIONAL
CHRISTOPHER T. VOLLMER
ENGINEER NO PE-068113

RECOMMENDED February 3rd, 2022

SHEET 10 OF 44

DES: CJP | DWN: CJP | CHK: CTV

pw:\\gfnet-pw.bentley.com:gfnet-pw-01\Documents\Projects\61636\INPUT\COMP_01\CIVIL\BRDG\W&LE RR BRIDGE\SHT10_ABUT1_ELEVATION.dgn
1/4/2022 2:53:20 PM

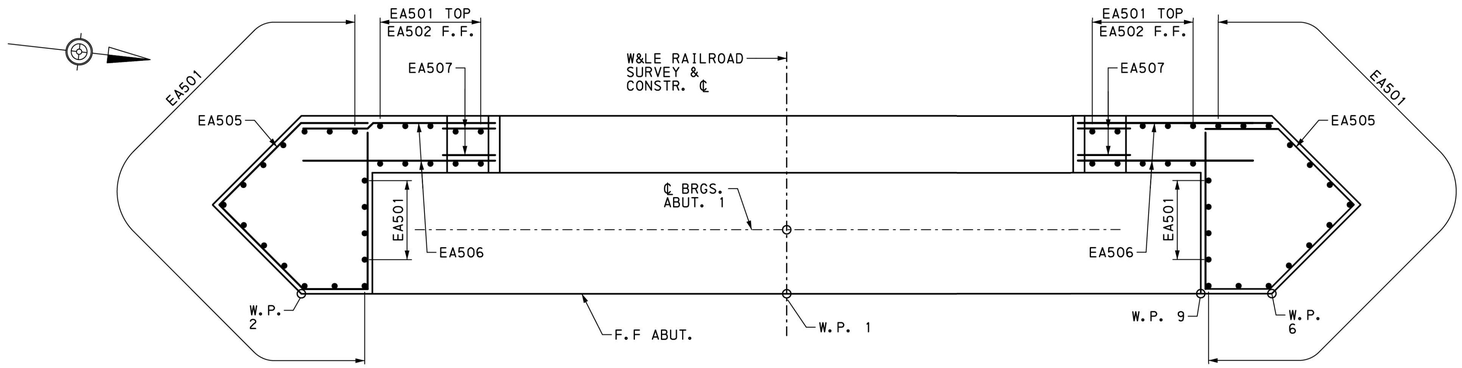

SECTION A1-A1 - STAGE 1

1′ 0 1′ 2′ 3′

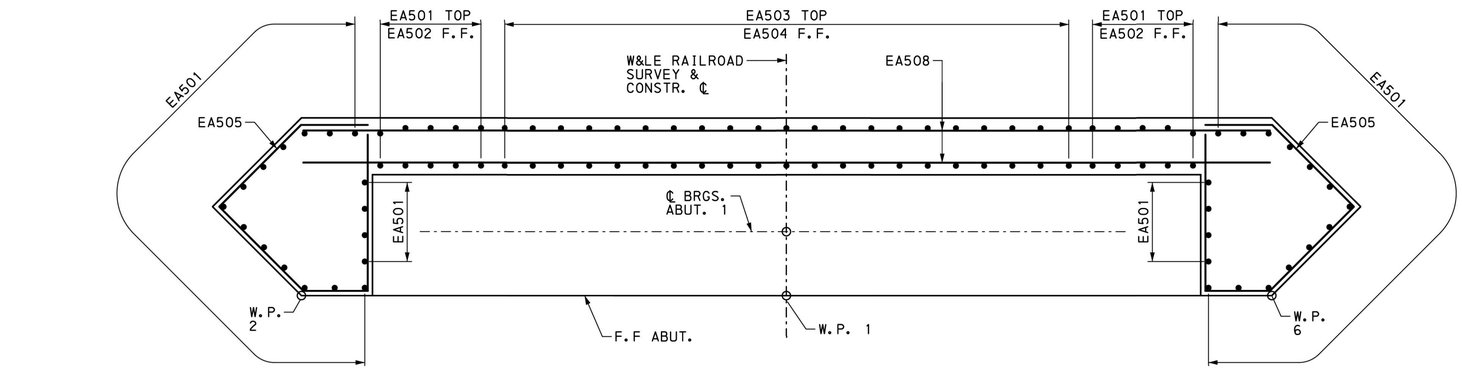

SECTION B1-B1 - STAGE 1

1′ 0 1′ 2′ 3′

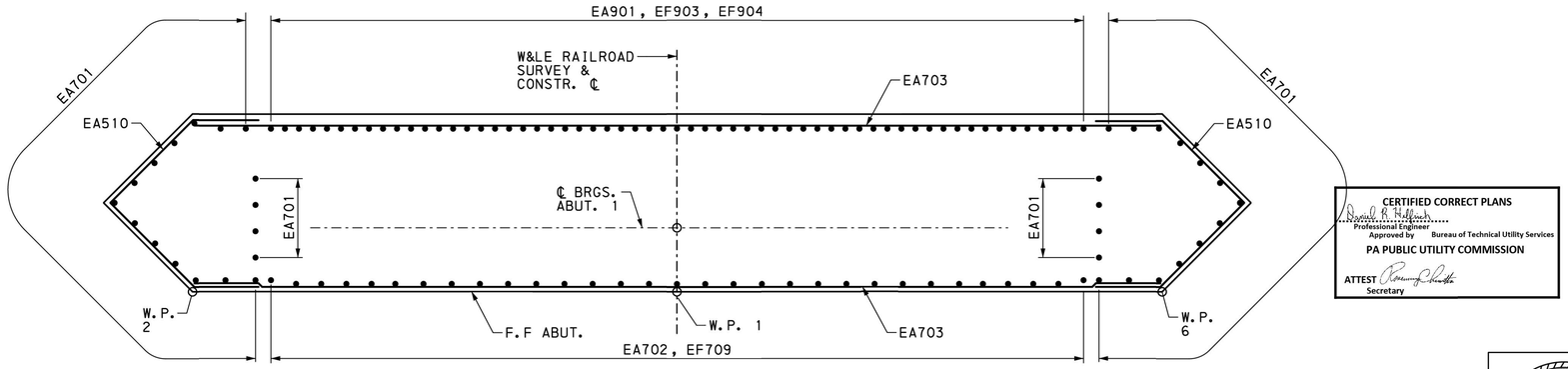

SECTION C1-C1 - STAGE 1

1′ 0 1′ 2′ 3′

CERTIFIED CORRECT PLANS
Professional Engineer
Approved by Bureau of Technical Utility Services
PA PUBLIC UTILITY COMMISSION
ATTEST
Secretary

Mark	Description	By	Chk'd.	Recm'd.	Date
REVISIONS					

S.R. 0051 PREVIOUSLY KNOWN AS L.R. 288

COMMONWEALTH OF PENNSYLVANIA
DEPARTMENT OF TRANSPORTATION

WESTMORELAND COUNTY
S.R. 0070 SECTION E10

SEGMENT 40/41 OFFSET 1725/1692 (NB/SB)
WHEELING & LAKE ERIE RAILROAD (MP C-17.01)
OVER S.R. 0051 STATION 782+91.42

SINGLE SPAN THROUGH GIRDER BRIDGE
ABUTMENT 1 SECTIONS

COMMONWEALTH OF PENNSYLVANIA
REGISTERED PROFESSIONAL
CHRISTOPHER T. VOLLMER
ENGINEER NO PE-068183

RECOMMENDED February 3rd, 2022

SHEET 11 OF 44

DES: CJP | DWN: CJP | CHK: CTV

pw:\\gfnet-pw.bentley.com:gfnet-pw-01\Documents\Projects\61636\INPUT\COMP_01\CIVIL\BRDG\W&LE RR BRIDGE\SHT11_ABUT1_SECTIONS.dgn
1/4/2022 2:53:23 PM

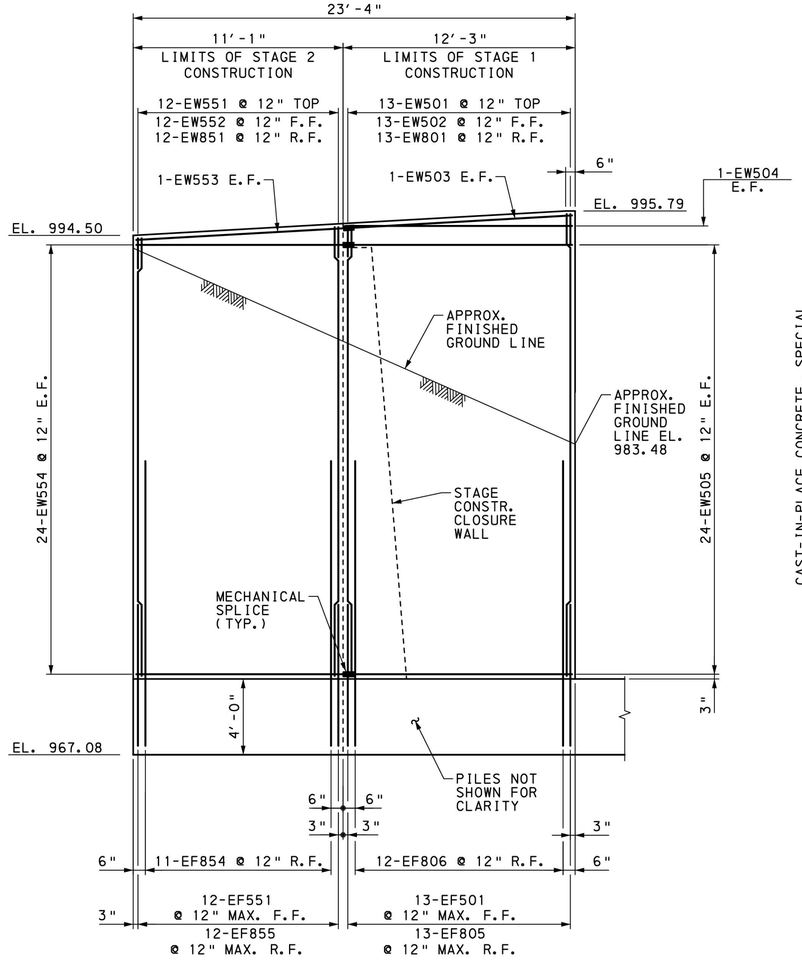

WING A ELEVATION

2′ 0 2′ 4′

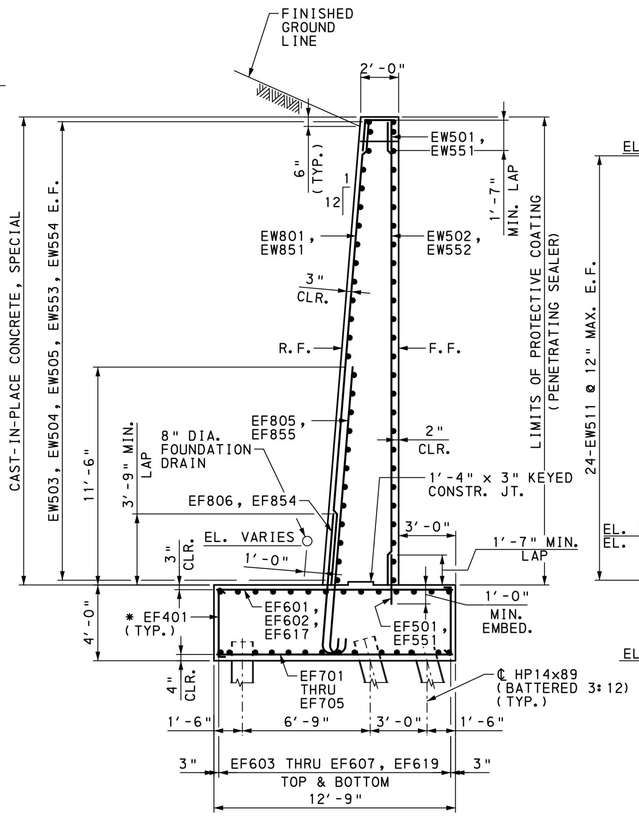

WING A TYPICAL SECTION

2′ 0 2′ 4′

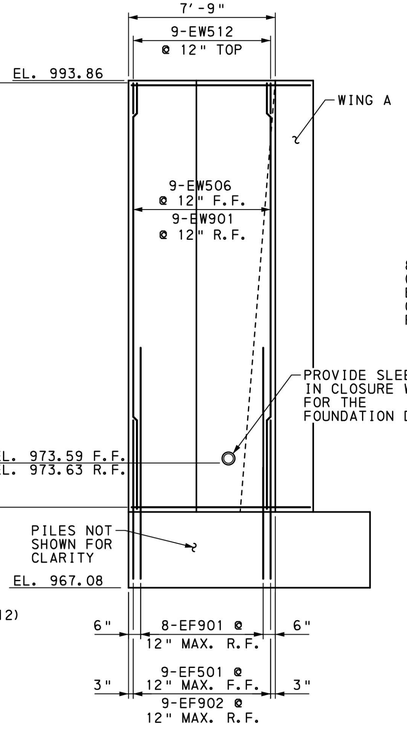

CLOSURE WALL ELEVATION

2′ 0 2′ 4′

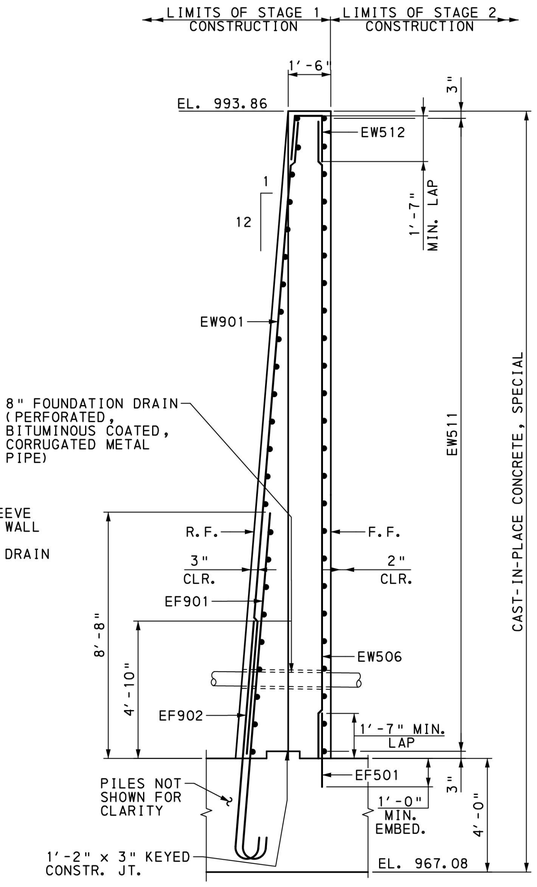

CLOSURE WALL TYPICAL SECTION

1′ 0 1′ 2′ 3′

Mark	Description	By	Chk'd.	Recm'd.	Date
REVISIONS					

S.R. 0051 PREVIOUSLY KNOWN AS L.R. 288

NOTES:

1. FOR WATERPROOFING DETAIL, SEE SHEET 13.
2. FOR BAR SCHEDULE, SEE SHEETS 14 & 15.
3. FOR BACKFILL DETAIL, SEE SHEET 3.

LEGEND:

* EF401 @ 48" MAX. SPACING IN BOTH DIRECTIONS. ALTERNATE 90° AND 135° HOOKS EVERY OTHER TIE.

CERTIFIED CORRECT PLANS
David R. Hilbish
Professional Engineer
Approved by Bureau of Technical Utility Services
PA PUBLIC UTILITY COMMISSION
ATTEST Rosemary Chiavetta
Secretary

COMMONWEALTH OF PENNSYLVANIA REGISTERED PROFESSIONAL CHRISTOPHER T. VOLLMER ENGINEER NO. PE-0683 COMMONWEALTH OF PENNSYLVANIA

COMMONWEALTH OF PENNSYLVANIA
DEPARTMENT OF TRANSPORTATION

WESTMORELAND COUNTY
S.R. 0070 SECTION E10
SEGMENT 40/41 OFFSET 1725/1692 (NB/SB)
WHEELING & LAKE ERIE RAILROAD (MP C-17.01)
OVER S.R. 0051 STATION 782+91.42
SINGLE SPAN THROUGH GIRDER BRIDGE
WING A DETAILS

RECOMMENDED February 3rd, 2022

SHEET 12 OF 44

DES: CJP | DWN: CJP | CHK: CTV

pw:\\gfnet-pw.bentley.com:gfnet-pw-01\Documents\Projects\61636\INPUT\COMP_01\CIVIL\BRDG\W&LE RR BRIDGE\SHT12_WING A.dgn
1/4/2022 2:53:30 PM

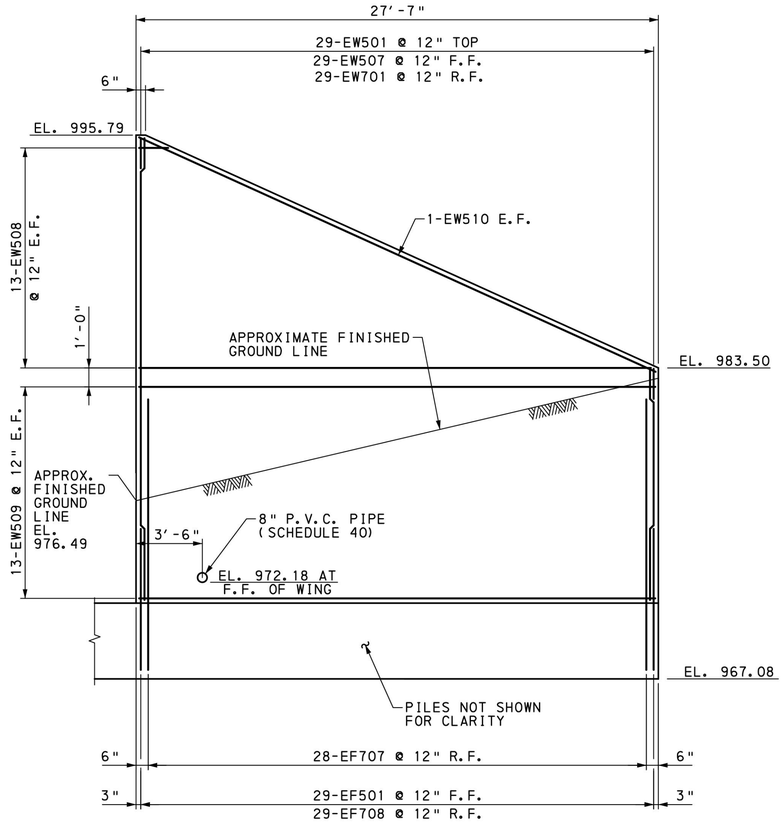

WING B ELEVATION

2' 0 2' 4'

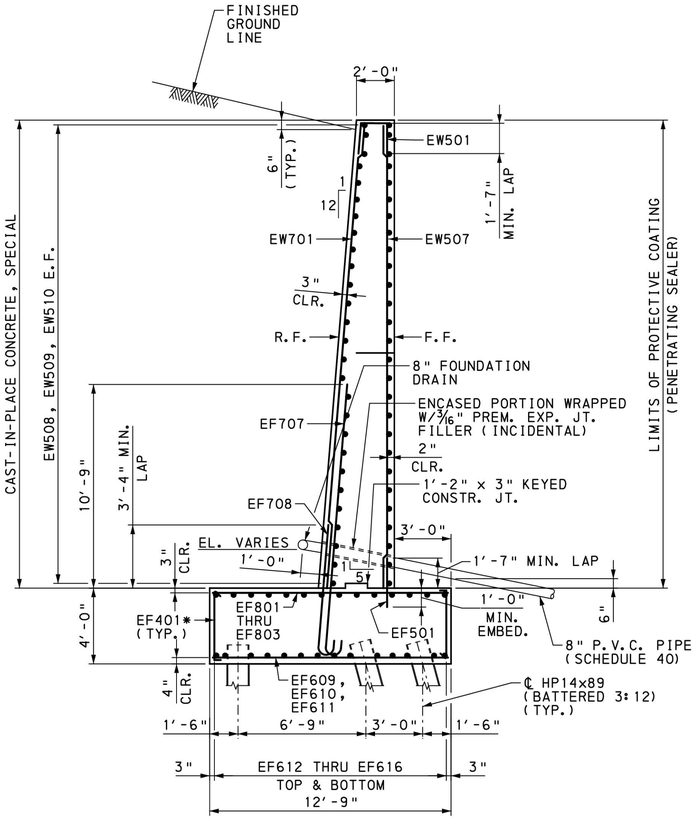

WING B TYPICAL SECTION

2' 0 2' 4'

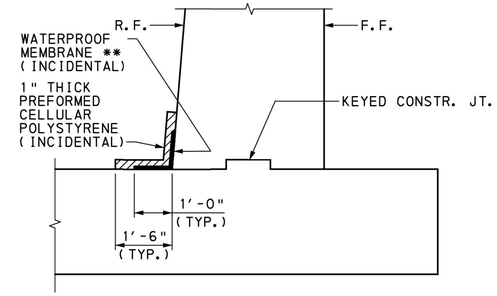

WATERPROOFING DETAIL

1' 0 1' 2'

NOTES:

1. FOR BAR SCHEDULE, SEE SHEETS 14 & 15.
2. FOR BACKFILL DETAIL, SEE SHEET 3.

LEGEND:

* EF401 @ 48" MAX. SPACING IN BOTH DIRECTIONS. ALTERNATE 90° AND 135° HOOKS EVERY OTHER TIE.

** 2'-0" WIDE PIECE BENT TO FIT STEM AND TOP OF FOOTING AS SHOWN. USE AN ADHESIVE-BACKED PREFORMED MEMBRANE WATERPROOFING SYSTEM PER PUB. 408 SECTION 680.2 (b).

Mark	Description	By	Chk'd.	Recm'd.	Date
REVISIONS					

S.R. 0051 PREVIOUSLY KNOWN AS L.R. 288

CERTIFIED CORRECT PLANS
Daniel R. Hilferty
Professional Engineer
Approved by Bureau of Technical Utility Services
PA PUBLIC UTILITY COMMISSION
ATTEST Rosemary Chiavetta
Secretary

COMMONWEALTH OF PENNSYLVANIA
DEPARTMENT OF TRANSPORTATION

WESTMORELAND COUNTY
S.R. 0070 SECTION E10
SEGMENT 40/41 OFFSET 1725/1692 (NB/SB)
WHEELING & LAKE ERIE RAILROAD (MP C-17.01)
OVER S.R. 0051 STATION 782+91.42
SINGLE SPAN THROUGH GIRDER BRIDGE
WING B DETAILS

COMMONWEALTH OF PENNSYLVANIA REGISTERED PROFESSIONAL CHRISTOPHER T. VOLLMER ENGINEER NO. PE-068I3

RECOMMENDED February 3rd, 2022

SHEET 13 OF 44

DES: CJP | DWN: CJP | CHK: CTV

P:\\gfnet-pw.bentley.com:gfnet-pw-01\Documents\Projects\61636\INPUT\COMP_01\CIVIL\BRDG\W&LE RR BRIDGE\SHT13_WING B.dgn
1/4/2022 2:53:36 PM

ABUTMENT 1 - STAGE 1

MARK	SIZE	NUMBER	LENGTH	TYPE	A	B	C	D	E	G	H	J	K	REMARKS
EA501	5	44	7′-1"	STR										
EA502	5	10	9′-2"	STR										
EA503	5	21	11′-1"	S10		4′-9½"	1′-6"	4′-9½"						
EA504	5	21	4′-3"	STR										
EA505	5	18	18′-3"	S11	2′-5"	4′-1"	4′-1"	2′-2"	5′-6"					
EA506	5	12	6′-10"	STR										
EA507	5	4	5′-10"	3	1′-10"	4′-0"	6⅞"							
EA508	5	17	34′-0"	STR										
EA509	5	30	7′-4"	3	1′-8"	5′-8"	5⅝"							
EA510	5	42	12′-9"	S11	2′-5"	4′-1"	4′-1"	2′-2"	-					
EA511	5	12	9′-11"	17		3′-0"	3′-11"	3′-0"						
EA512	5	10	10′-10"	17		3′-0"	4′-10"	3′-0"						
EA701	7	34	22′-10"	STR										
EA702	7	30	18′-11"	STR										
EA703	7	42	34′-0"	STR										
EA901	9	31	24′-2"	STR										
EF401	4	134	4′-2"	T9	4½"	3′-5"				4½"	3"			
EF501	5	51	2′-7"	STR										
EF601	6	2	10′-0" TO 9′-7"	STR										VARY 1 EA. BY 5"
EF602	6	7	14′-8" TO 11′-2"	STR										VARY 1 EA. BY 7"
EF603	6	10	17′-10" TO 8′-8"	STR										VARY 1 EA. BY 1′- 0¼" ✱
EF604	6	3	17′-9" TO 17′-4"	STR										VARY 1 EA. BY 2½" ✱
EF605	6	7	16′-5" TO 10′-11"	STR										VARY 1 EA. BY 11" ✱
EF606	6	2	8′-11"	STR										✱
EF607	6	2	15′-5" TO 14′-7"	STR										VARY 1 EA. BY 10" ✱
EF608	6	38	35′-7"	STR										
EF609	6	20	12′-5"	STR										
EF610	6	6	14′-8" TO 9′-9"	STR										VARY 1 EA. BY 1′-0"
EF611	6	6	8′-3" TO 3′-3"	STR										VARY 1 EA. BY 1′-0"
EF612	6	3	34′-3" TO 32′-9"	STR										VARY 1 EA. BY 9"
EF613	6	7	31′-3" TO 26′-0"	STR										VARY 1 EA. BY 10½"
EF614	6	2	24′-7"	STR										
EF615	6	14	33′-3" TO 24′-0"	STR										VARY 1 EA. BY 8½"
EF616	6	2	33′-2"	STR										
EF617	6	26	15′-7" TO 3′-4"	STR										VARY 1 EA. BY 6"
EF618	6	2	42′-5"	STR										
EF619	6	3	16′-10" TO 14′-7"	STR										VARY 1 EA. BY 1′-1½" ✱
EF701	7	2	10′-0" TO 9′-7"	STR										VARY 1 EA. BY 5"
EF702	7	4	14′-8" TO 11′-2"	STR										VARY 1 EA. BY 1′-2"
EF703	7	4	15′-2" TO 12′-3"	STR										VARY 1 EA. BY 11 11/16"
EF704	7	4	10′-11" TO 8′-0"	STR										VARY 1 EA. BY 11 11/16"
EF705	7	4	6′-7" TO 3′-9"	STR										VARY 1 EA. BY 11 5/16"
EF707	7	28	15′-4"	T5	10"	14′-6"						7"		
EF708	7	29	7′-11"	T5	10"	7′-1"						7"		
EF709	7	64	3′-8"	STR										
EF801	8	18	12′-5"	STR										
EF802	8	4	14′-0" TO 12′-11"	STR										VARY 1 EA. BY 4 3/8"
EF803	8	14	15′-11" TO 3′-11"	STR										VARY 1 EA. BY 11 1/16"
EF804	8	110	19′-11"	STR										
EF805	8	13	16′-2"	T5	11"	15′-3"						8"		
EF806	8	12	8′-5"	T5	11"	7′-6"						8"		
EF901	9	8	13′-8"	T5	1′-3"	12′-5"						11¾"		
EF902	9	9	9′-10"	T5	1′-3"	8′-7"						11¾"		
EF903	9	29	17′-7"	T5	1′-3"	16′-4"						11¾"		
EF904	9	28	9′-7"	T5	1′-3"	8′-4"						11¾"		
EW501	5	42	4′-9"	16		1′-7"	1′-7"	1′-7"			1′-6⅞"		1½"	
EW502	5	13	24′-4½" TO 23′-8½"	STR										VARY 1 EA. BY ⅝"
EW503	5	2	11′-10"	STR										✱
EW504	5	2	11′-11"	STR										
EW505	5	48	11′-10"	STR										✱
EW506	5	9	22′-5"	STR										
EW507	5	29	24′-4½" TO 12′-2"	STR										VARY 1 EA. BY 5¼"
EW508	5	26	27′-0" TO 1′-6"	STR										VARY 2 EA. BY 2′-1½"
EW509	5	26	27′-3"	STR										
EW510	5	2	29′-11"	STR										
EW511	5	48	9′-5"	STR										
EW512	5	9	4′-3"	16		1′-7"	1′-1"	1′-7"			1′-6⅞"			
EW701	7	29	24′-4½" TO 12′-2"	STR										VARY 1 EA. BY 5¼"
EW801	8	13	24′-4½" TO 23′-8½"	STR										VARY 1 EA. BY ⅝"
EW901	9	9	22′-6"	STR										

DES: CJP | DWN: CJP | CHK: CMC

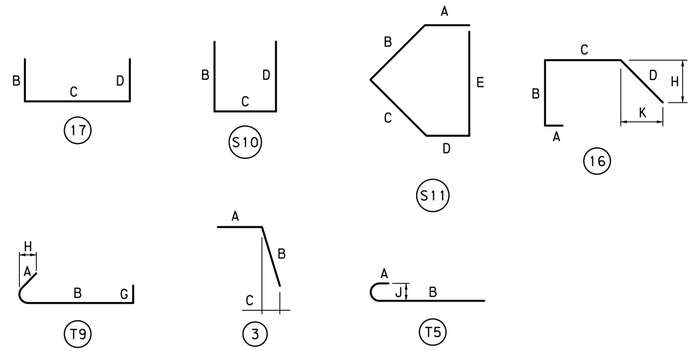

NOTES:

ALL DIMENSIONS ARE OUT-TO-OUT OF BAR EXCEPT "A" AND "G" ON STANDARD 180° AND 135° HOOKS.

"J" DIMENSIONS ON 180° HOOKS TO BE SHOWN ONLY WHERE NECESSARY TO RESTRICT HOOK SIZE, OTHERWISE STANDARD HOOK SIZES ARE TO BE USED.

FIGURES IN CIRCLES SHOW TYPES.

FOR REINFORCEMENT BAR FABRICATION DETAILS, REFER TO STANDARD DRAWING BC-736M.

BAR MARK LEGEND

EF501

- EPOXY COATED
- CODE LETTER
- SIZE
- NUMBERING

CODE LETTERS FOR BAR MARKS

A = ABUTMENT
F = FOOTING
W = WING

LEGEND:

✱ MECHANICAL SPLICE 1 END EA.

CERTIFIED CORRECT PLANS
Professional Engineer
Approved by Bureau of Technical Utility Services
PA PUBLIC UTILITY COMMISSION
ATTEST Secretary

Mark	Description	By	Chk'd.	Recm'd.	Date
	REVISIONS				

S.R. 0051 PREVIOUSLY KNOWN AS L.R. 288

COMMONWEALTH OF PENNSYLVANIA
DEPARTMENT OF TRANSPORTATION

WESTMORELAND COUNTY
S.R. 0070 SECTION E10

SEGMENT 40/41 OFFSET 1725/1692 (NB/SB)
WHEELING & LAKE ERIE RAILROAD (MP C-17.01)
OVER S.R. 0051 STATION 782+91.42
SINGLE SPAN THROUGH GIRDER BRIDGE

ABUTMENT 1 - STAGE 1 BAR SCHEDULE

COMMONWEALTH OF PENNSYLVANIA REGISTERED PROFESSIONAL
CHRISTOPHER T. VOLLMER
ENGINEER NO. PE-0683

RECOMMENDED February 3rd, 2022

SHEET 14 OF 44

pw:\\gfnet-pw.bentley.com:gfnet-pw-01\Documents\Projects\61636\INPUT\COMP_01\CIVIL\BRDG\M&LE RR BRIDGE\SHT14_ABUT1_REBAR SCHEDULE.dgn
1/4/2022 2:53:38 PM

ABUTMENT 1 - STAGE 2

MARK	SIZE	NUMBER	LENGTH	TYPE	A	B	C	D	E	G	H	J	K	REMARKS
EF651	6	12	11′-2"	STR										**
EF652	6	2	13′-10" TO 13′-6"	STR										VARY 1 EA. BY 4" **
EF653	6	22	12′-5"	STR										
EF654	6	3	2′-3" TO 1′-0"	STR										VARY 1 EA. BY 7½"
EF655	6	4	13′-10" TO 11′-8"	STR										VARY 1 EA. BY 8⅝" **
EF656	6	10	11′-2"	STR										**
EF751	7	12	12′-5"	STR										
EW551	5	12	4′-9"	16		1′-7"	1′-7"	1′-7"			1′-6⅞"		1½"	
EW552	5	12	23′-8" TO 23′-1"	STR										VARY 1 EA. BY ⅝"
EW553	5	2	11′-2"	STR										**
EW554	5	48	11′-2"	STR										**
EW851	8	12	23′-8" TO 23′-1"	STR										VARY 1 EA. BY ⅝"

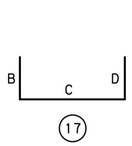

17

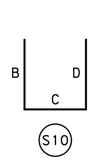

S10

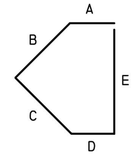

S11

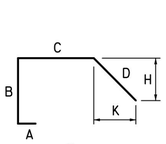

16

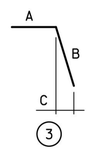

3

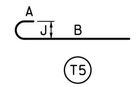

T5

NOTES:

ALL DIMENSIONS ARE OUT-TO-OUT OF BAR EXCEPT "A" AND "G" ON STANDARD 180° AND 135° HOOKS.

"J" DIMENSIONS ON 180° HOOKS TO BE SHOWN ONLY WHERE NECESSARY TO RESTRICT HOOK SIZE, OTHERWISE STANDARD HOOK SIZES ARE TO BE USED.

FIGURES IN CIRCLES SHOW TYPES.

FOR REINFORCEMENT BAR FABRICATION DETAILS, REFER TO STANDARD DRAWING BC-736M.

BAR MARK LEGEND

EF501
- EPOXY COATED
- CODE LETTER
- SIZE
- NUMBERING

CODE LETTERS FOR BAR MARKS

A = ABUTMENT
F = FOOTING
W = WING

LEGEND:

** THREAD ONE END 3"

CERTIFIED CORRECT PLANS
Professional Engineer
Approved by Bureau of Technical Utility Services
PA PUBLIC UTILITY COMMISSION
ATTEST Secretary

Mark	Description	By	Chk'd.	Recm'd.	Date
REVISIONS					

S.R. 0051 PREVIOUSLY KNOWN AS L.R. 288

COMMONWEALTH OF PENNSYLVANIA
DEPARTMENT OF TRANSPORTATION

WESTMORELAND COUNTY
S.R. 0070 SECTION E10
SEGMENT 40/41 OFFSET 1725/1692 (NB/SB)
WHEELING & LAKE ERIE RAILROAD (MP C-17.01)
OVER S.R. 0051 STATION 782+91.42
SINGLE SPAN THROUGH GIRDER BRIDGE
ABUTMENT 1 - STAGE 2 BAR SCHEDULE

COMMONWEALTH OF PENNSYLVANIA
REGISTERED PROFESSIONAL
CHRISTOPHER T. VOLLMER
ENGINEER NO PE-068I

RECOMMENDED February 3rd, 2022

SHEET 15 OF 44

DES: CJP | DWN: CJP | CHK: CMC

pw:\\gfnet-pw.bentley.com:gfnet-pw-01\Documents\Projects\61636\INPUT\COMP_01\CIVIL\BRDG\W&LE RR BRIDGE\BRIDGE\SHT14A_ABUT1_REBAR SCHEDULE (2).dgn
1/4/2022 2:53:40 PM

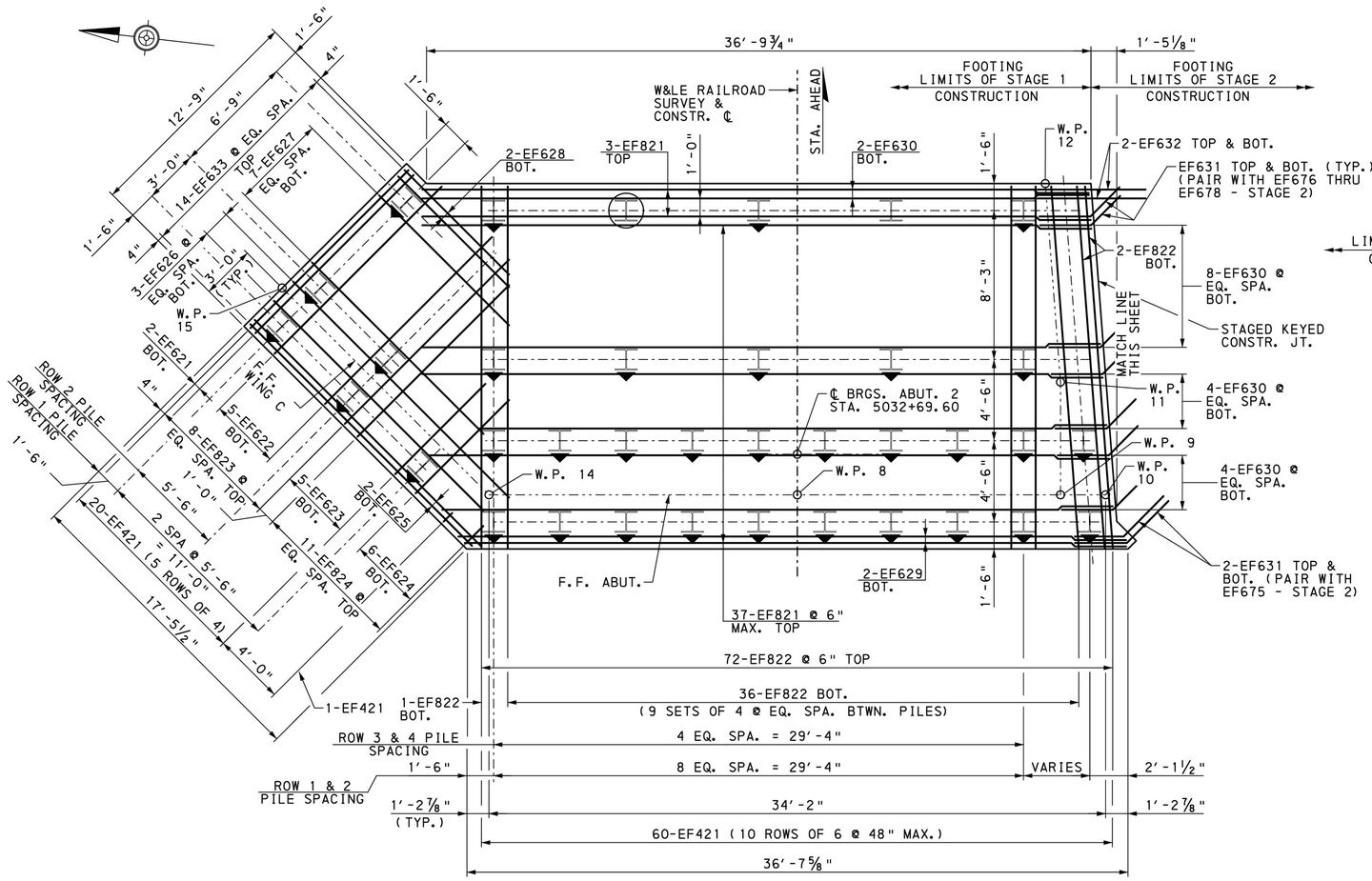

ABUTMENT 2 FOOTING PLAN - STAGE 1

2′ 0 2′ 4′

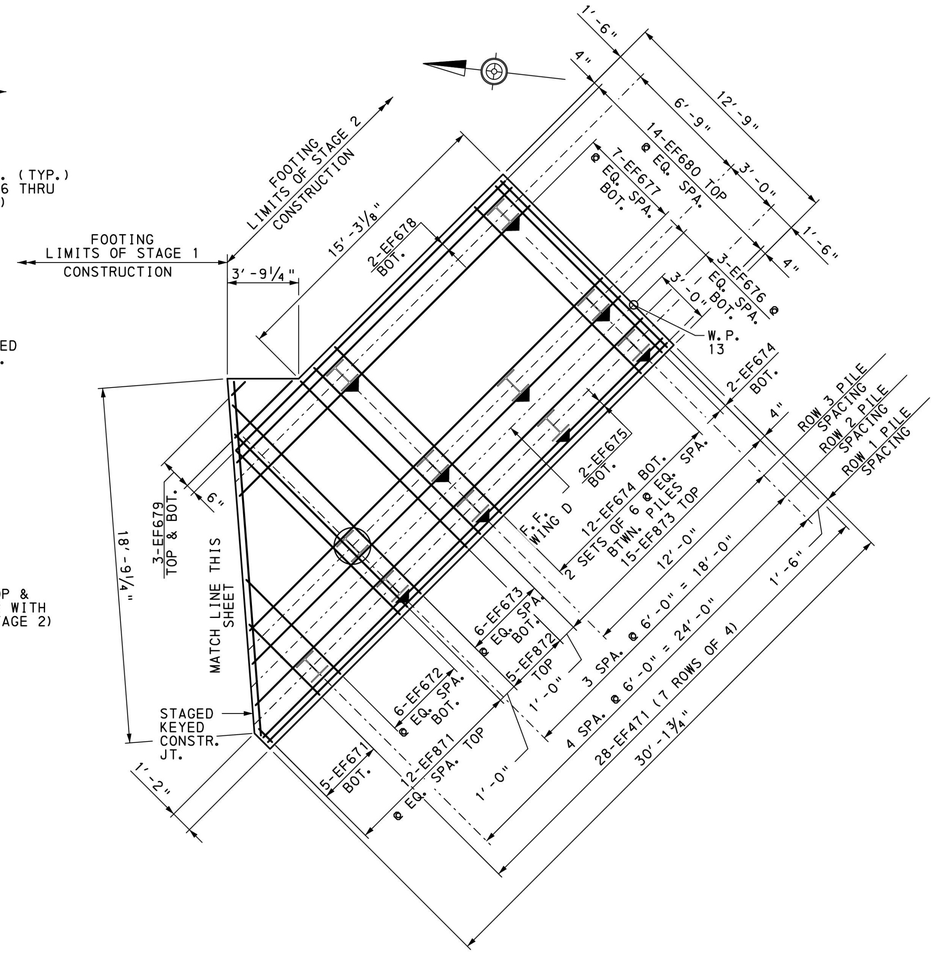

ABUTMENT 2 FOOTING PLAN - STAGE 2

2′ 0 2′ 4′

PILE LOADS (SERVICE)			
LOCATION	AASHTO LOAD GROUP	AXIAL (KIP/PILE)	
		DESIGN LOAD	ALLOW. CAPACITY
ABUT. 2	GROUP III	256	320
WING C	GROUP III	184	320
WING D	GROUP III	184	320

LEGEND:

HP14x89 VERTICAL

HP14x89 BATTERED

TEST PILE

NOTES:

1. FOR STAKE-OUT PLAN, SEE SHEET 7.
2. FOR BAR SCHEDULE, SEE SHEETS 22 & 23.
3. PRIOR TO INSTALLATION OF PILE FOUNDATION INSTALL COLUMN SUPPORTED EMBANKMENT IN ACCORDANCE WITH SPECIAL PROVISION FOR ROADWAY ITEM 9000-0051.

CERTIFIED CORRECT PLANS
Darrell R. Sullivan
Professional Engineer
Approved by Bureau of Technical Utility Services
PA PUBLIC UTILITY COMMISSION
ATTEST
Secretary

Mark	Description	By	Chk'd.	Recm'd.	Date
REVISIONS					

S.R. 0051 PREVIOUSLY KNOWN AS L.R. 288

COMMONWEALTH OF PENNSYLVANIA
DEPARTMENT OF TRANSPORTATION

WESTMORELAND COUNTY
S.R. 0070 SECTION E10
SEGMENT 40/41 OFFSET 1725/1692 (NB/SB)
WHEELING & LAKE ERIE RAILROAD (MP C-17.01)
OVER S.R. 0051 STATION 782+91.42
SINGLE SPAN THROUGH GIRDER BRIDGE
ABUTMENT 2 FOOTING PLAN

COMMONWEALTH OF PENNSYLVANIA REGISTERED PROFESSIONAL CHRISTOPHER T. VOLLMER ENGINEER NO PE-0683

RECOMMENDED February 3rd, 2022

SHEET 16 OF 44

DES: CJP | DWN: CJP | CHK: CTV

pw:\\gfnet-pw.bentley.com:gfnet-pw-01\Documents\Projects\61636\INPUT\COMP_01\CIVIL\BRDG\W&LE RR BRIDGE\SHT15_ABUT2_FOOTING PLAN.dgn
1/4/2022 2:53:42 PM

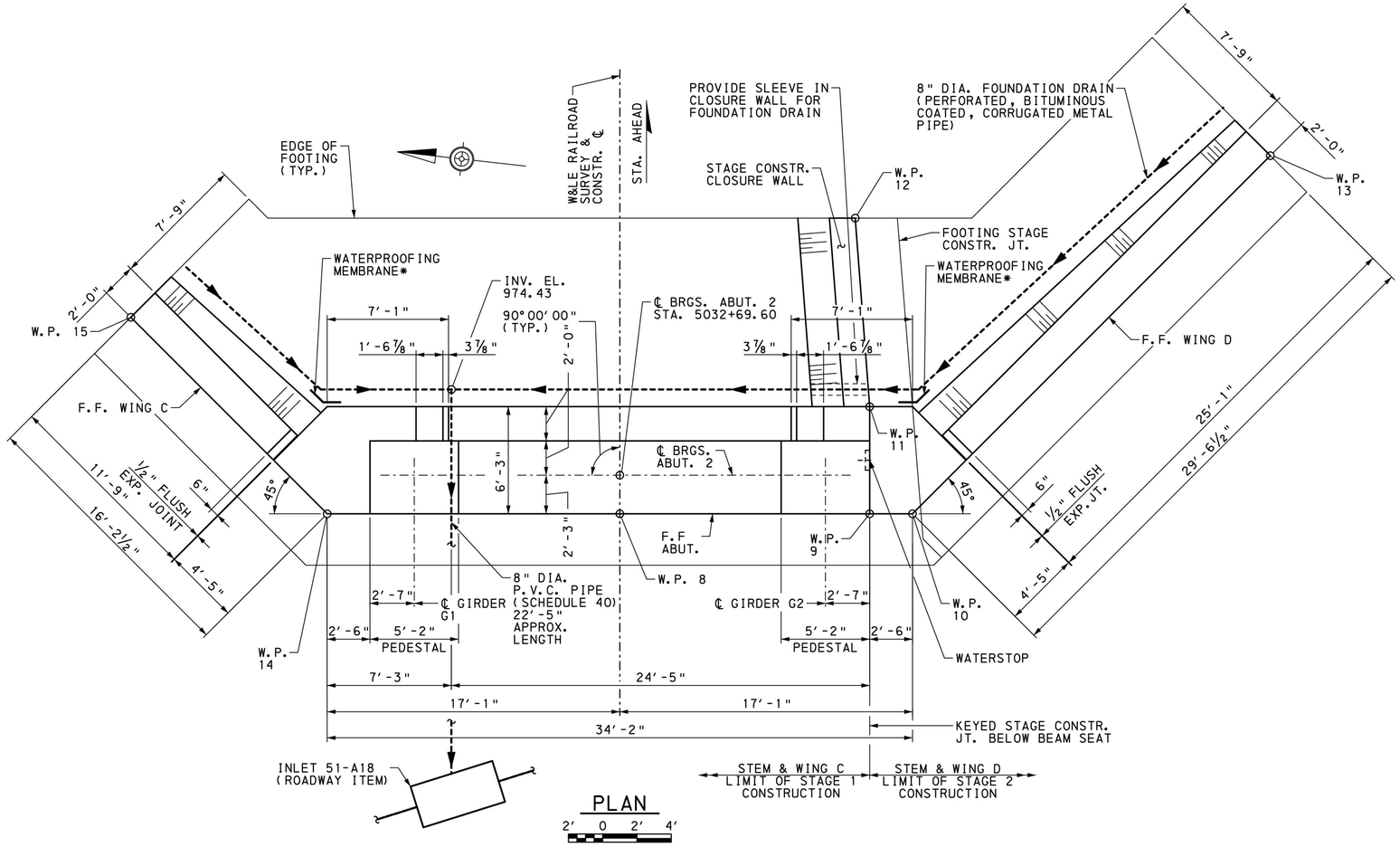

PLAN

2' 0 2' 4'

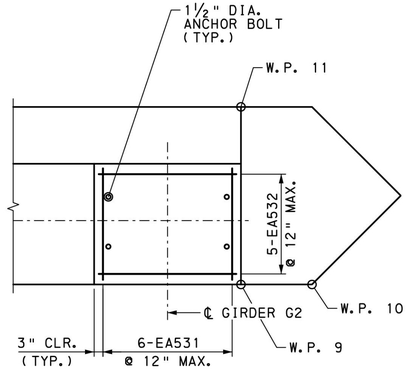

NOTE: PEDESTAL LEVEL IN BOTH DIRECTIONS.

PEDESTAL DETAILS

(GIRDER 2 SHOWN - GIRDER 1 SIMILAR)

1' 0 1' 2' 3'

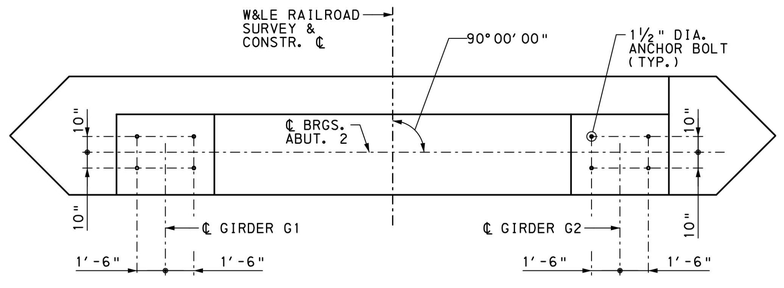

ANCHOR BOLT LAYOUT

2' 0 2' 4'

CERTIFIED CORRECT PLANS
Donald R. Hilferty
Professional Engineer
Approved by Bureau of Technical Utility Services
PA PUBLIC UTILITY COMMISSION
ATTEST Secretary

NOTES:

1. WATERSTOP IS INCIDENTAL TO CAST-IN-PLACE CONCRETE.
2. FOR STAKE-OUT PLAN, SEE SHEET 7.
3. FOR BAR SCHEDULE, SEE SHEETS 22 & 23.
4. FOR BEARING DETAILS, SEE SHEETS 25 & 26.

LEGEND:

----→ DIRECTION OF SLOPED FOUNDATION DRAIN. SLOPE ⅛" PER FOOT (MIN.)

* - 2'-0" WIDE PIECE BENT TO FIT ACROSS THE EXPANSION JOINT BETWEEN WING AND ABUTMENT STEMS. USE AN ADHESIVE BACKED, PREFORMED MEMBRANE WATERPROOFING SYSTEM PER PUB. 408, SECTION 680.2(b). MEMBRANE TO RUN CONTINUOUS FROM TOP OF FOOTING TO TOP OF WINGWALL.

Mark	Description	By	Chk'd.	Recm'd.	Date
REVISIONS					

S.R. 0051 PREVIOUSLY KNOWN AS L.R. 288

COMMONWEALTH OF PENNSYLVANIA
DEPARTMENT OF TRANSPORTATION

WESTMORELAND COUNTY
S.R. 0070 SECTION E10

SEGMENT 40/41 OFFSET 1725/1692 (NB/SB)
WHEELING & LAKE ERIE RAILROAD (MP C-17.01)
OVER S.R. 0051 STATION 782+91.42

SINGLE SPAN THROUGH GIRDER BRIDGE
ABUTMENT 2 PLAN

COMMONWEALTH OF PENNSYLVANIA — REGISTERED PROFESSIONAL — CHRISTOPHER T. VOLLMER — ENGINEER NO PE-068183

RECOMMENDED February 3rd, 2022

SHEET 17 OF 44

DES: CJP | DWN: CJP | CHK: CTV

pw:\\gfnet-pw.bentley.comgfnet-pw-01\Documents\Projects\61636\INPUT\COMP_01\CIVIL\BRDG\W&LE RR BRIDGE\SHT16_ABUT2_ PLAN.dgn
1/24/2022 2:53:48 PM

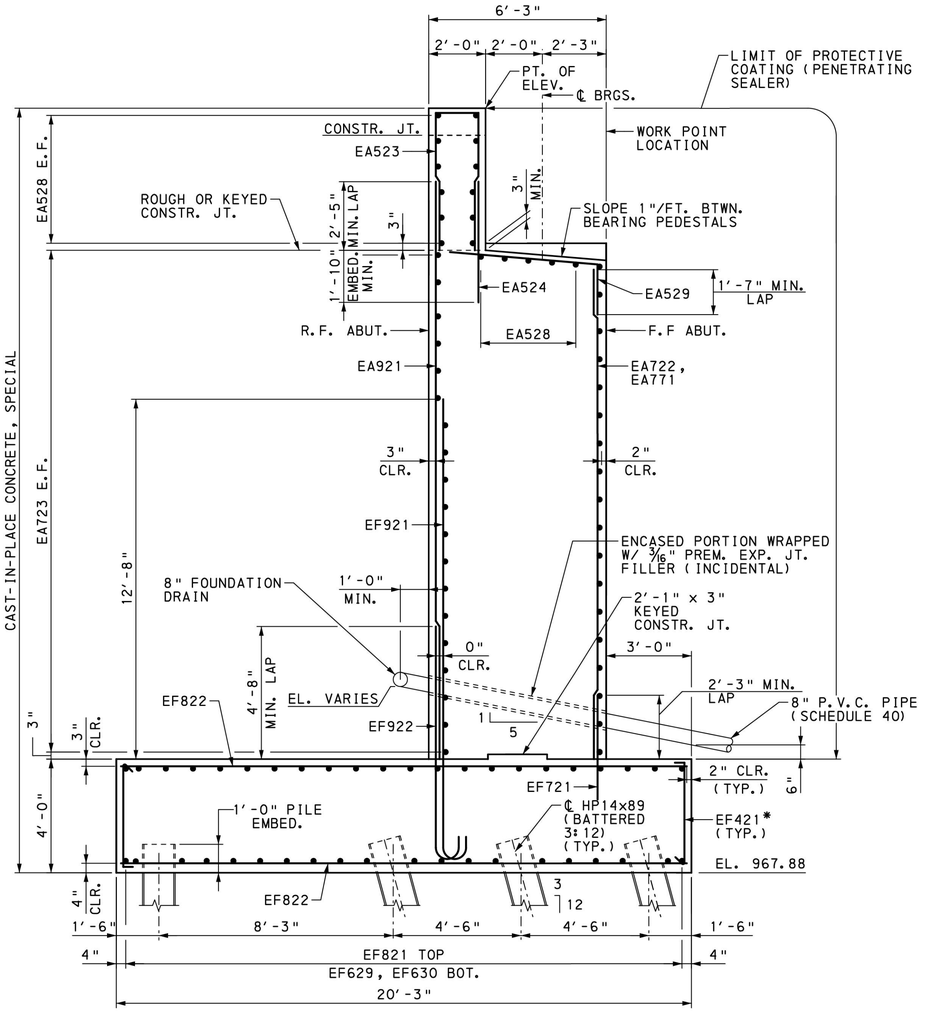

TYPICAL SECTION

1' 0 1' 2' 3'

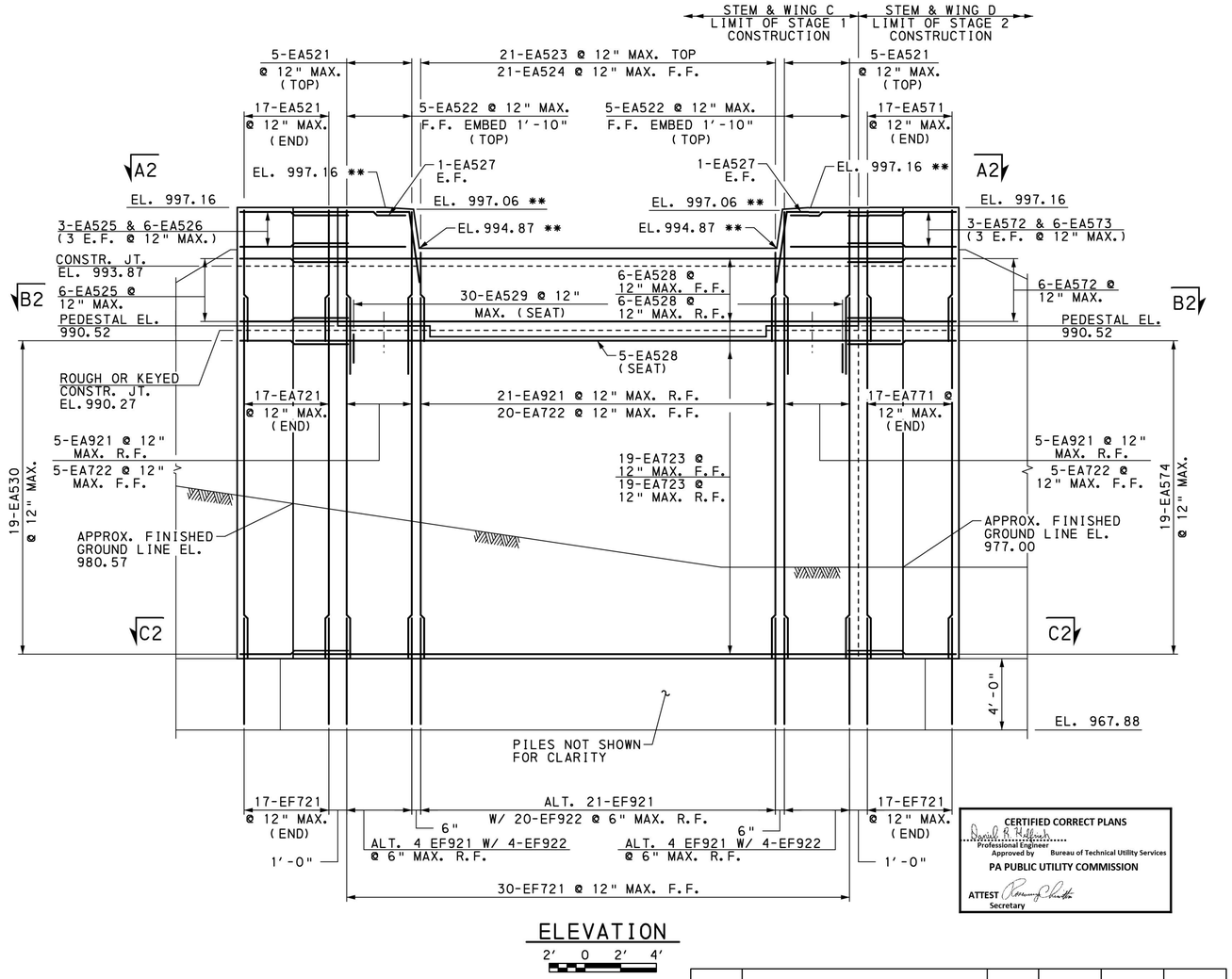

ELEVATION

2' 0 2' 4'

CERTIFIED CORRECT PLANS
Approved by Professional Engineer
Bureau of Technical Utility Services
PA PUBLIC UTILITY COMMISSION
ATTEST Secretary

NOTES:

1. FOR BAR SCHEDULE, SEE SHEETS 22 & 23.
2. FOR SECTIONS A2-A2, B2-B2, AND C2-C2, SEE SHEET 19.
3. FOR WATERPROOFING DETAIL AT BASE OF ABUTMENT STEM, SEE SHEET 13.
4. FOR BACKFILL DETAIL, SEE SHEET 3.

FOUNDATION DRAIN NOTE:

1. ENCASE 8" DIA. FOUNDATION DRAIN BEHIND ABUTMENTS & WINGWALL IN CONTINUOUS 2'x2' NO. 57 COARSE AGGREGATE. AGGREGATE TO BE ENCASE IN GEOTEXTILE, CLASS I.

LEGEND:

* EF421 @ 48" MAX. SPACING IN BOTH DIRECTIONS. ALTERNATE 90° AND 135° HOOKS EVERY OTHER TIE.

** ELEVATIONS PROVIDED ARE TO THE TOP OF 3/4" EMBEDDED BACKWALL PLATE, SEE SHEET 33 FOR PLATE DETAILS.

Mark	Description	By	Chk'd.	Recm'd.	Date
REVISIONS					

S.R. 0051 PREVIOUSLY KNOWN AS L.R. 288

COMMONWEALTH OF PENNSYLVANIA
DEPARTMENT OF TRANSPORTATION

WESTMORELAND COUNTY
S.R. 0070 SECTION E10

SEGMENT 40/41 OFFSET 1725/1692 (NB/SB)
WHEELING & LAKE ERIE RAILROAD (MP C-17.01)
OVER S.R. 0051 STATION 782+91.42

SINGLE SPAN THROUGH GIRDER BRIDGE
ABUTMENT 2 ELEVATION

COMMONWEALTH OF PENNSYLVANIA REGISTERED PROFESSIONAL CHRISTOPHER T. VOLLMER ENGINEER NO PE-0683

RECOMMENDED February 3rd, 2022

SHEET 18 OF 44

DES: CJP | DWN: CJP | CHK: CTV

pw:\\gfnet-pw.bentley.com:gfnet-pw-01\Documents\Projects\61636\INPUT\COMP_01\CIVIL\BRDG\W&LE RR BRIDGE\SHT17_ABUT2_ELEVATION.dgn
1/4/2022 2:53:55 PM

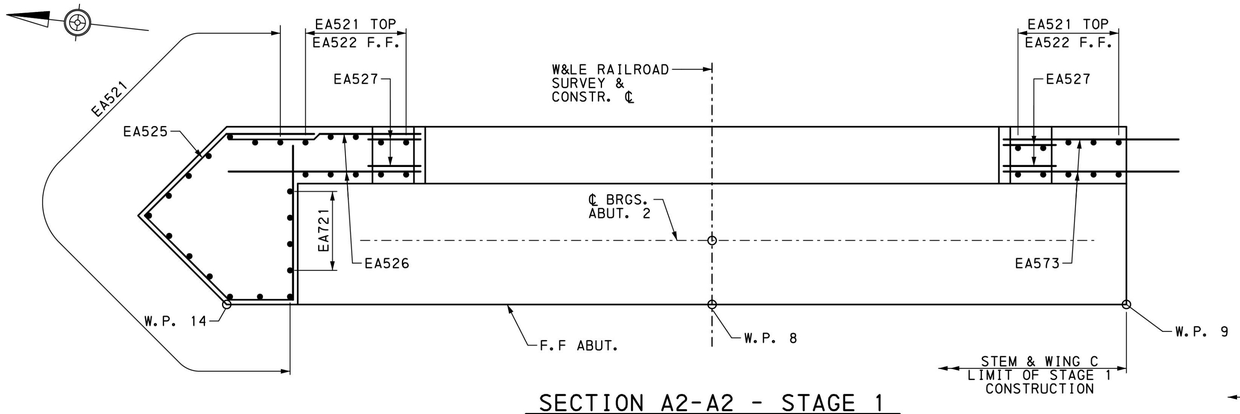

SECTION A2-A2 - STAGE 1

1' 0 1' 2' 3'

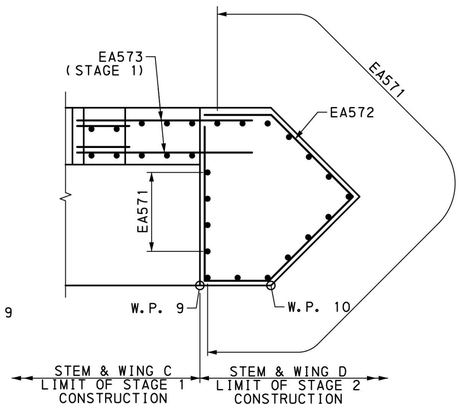

SECTION A-A - STAGE 2

1' 0 1' 2' 3'

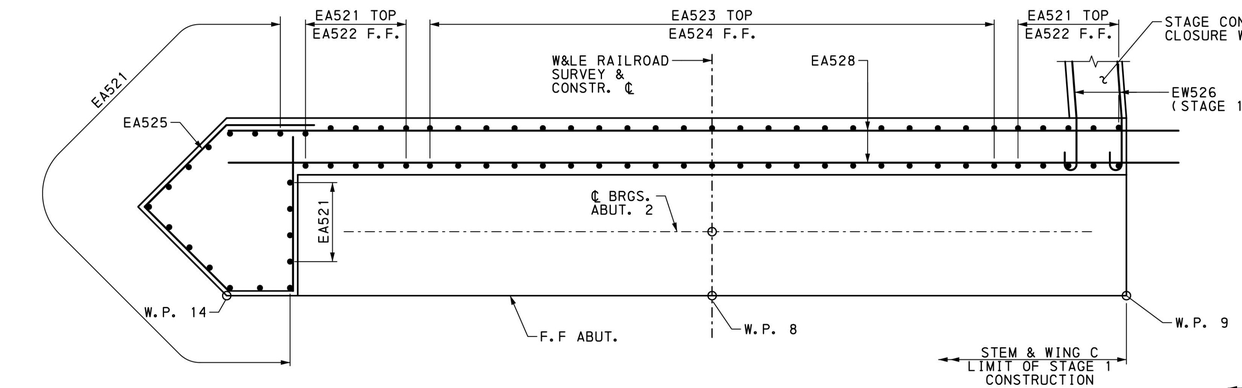

SECTION B2-B2 - STAGE 1

1' 0 1' 2' 3'

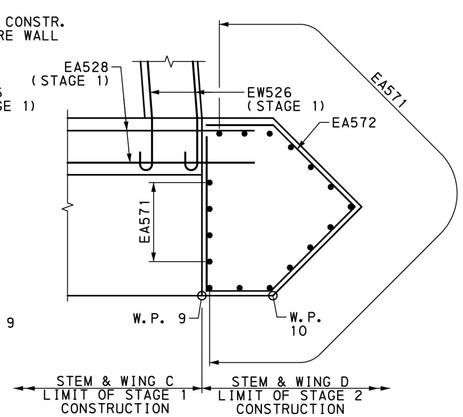

SECTION B-B - STAGE 2

1' 0 1' 2' 3'

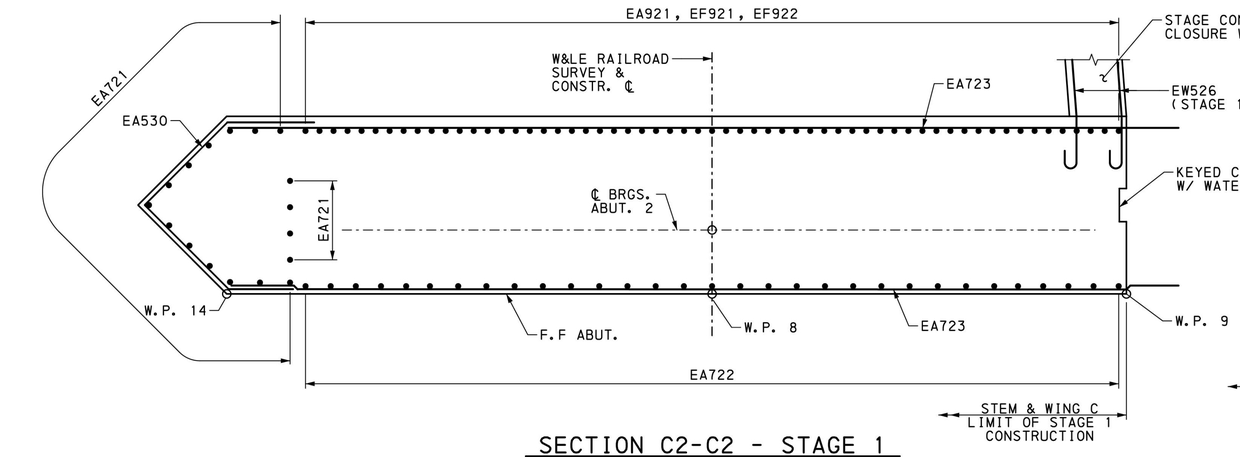

SECTION C2-C2 - STAGE 1

1' 0 1' 2' 3'

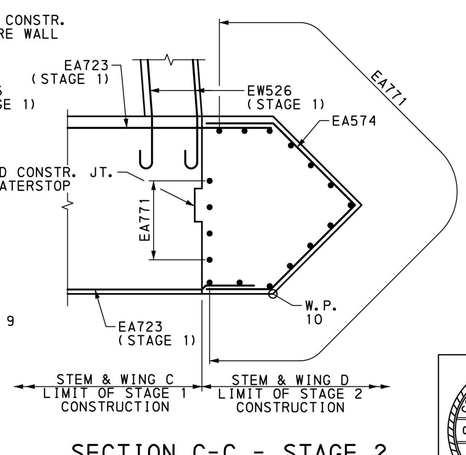

SECTION C-C - STAGE 2

1' 0 1' 2' 3'

DES: CJP | DWN: CJP | CHK: CTV

CERTIFIED CORRECT PLANS
David R Pollock
Professional Engineer
Approved by Bureau of Technical Utility Services
PA PUBLIC UTILITY COMMISSION
ATTEST
Secretary

Mark	Description	By	Chk'd.	Recm'd.	Date
REVISIONS					

S.R. 0051 PREVIOUSLY KNOWN AS L.R. 288

COMMONWEALTH OF PENNSYLVANIA
DEPARTMENT OF TRANSPORTATION

WESTMORELAND COUNTY
S.R. 0070 SECTION E10

SEGMENT 40/41 OFFSET 1725/1692 (NB/SB)
WHEELING & LAKE ERIE RAILROAD (MP C-17.01)
OVER S.R. 0051 STATION 782+91.42

SINGLE SPAN THROUGH GIRDER BRIDGE
ABUTMENT 2 SECTIONS

COMMONWEALTH OF PENNSYLVANIA
REGISTERED PROFESSIONAL
CHRISTOPHER T. VOLLMER
ENGINEER NO PE-068183

RECOMMENDED February 3rd, 2022

SHEET 19 OF 44

pw:\\gfnet-pw.bentley.com:gfnet-pw-01\Documents\Projects\61636\INPUT\COMP_01\CIVIL\BRDG\W&LE RR BRIDGE\SHT18_ABUT 2_SECTIONS.dgn
1/24/2022 2:53:57 PM

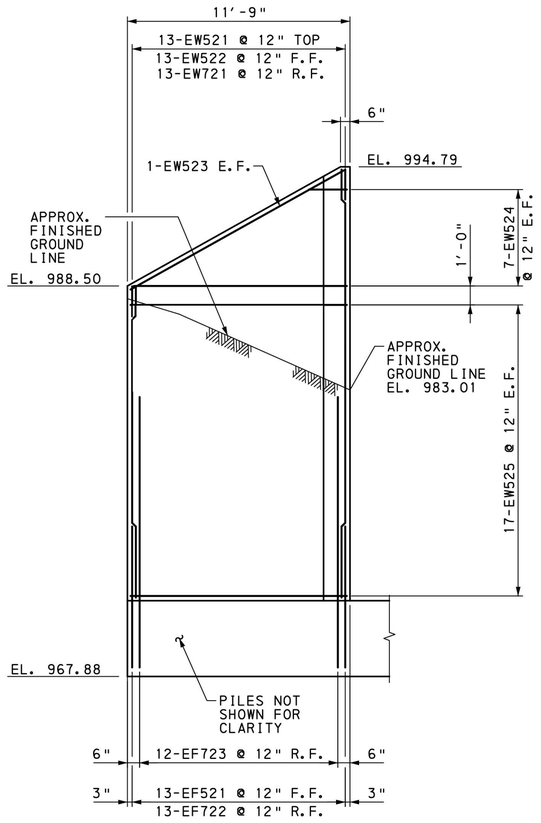

WING C ELEVATION

2′ 0 2′ 4′

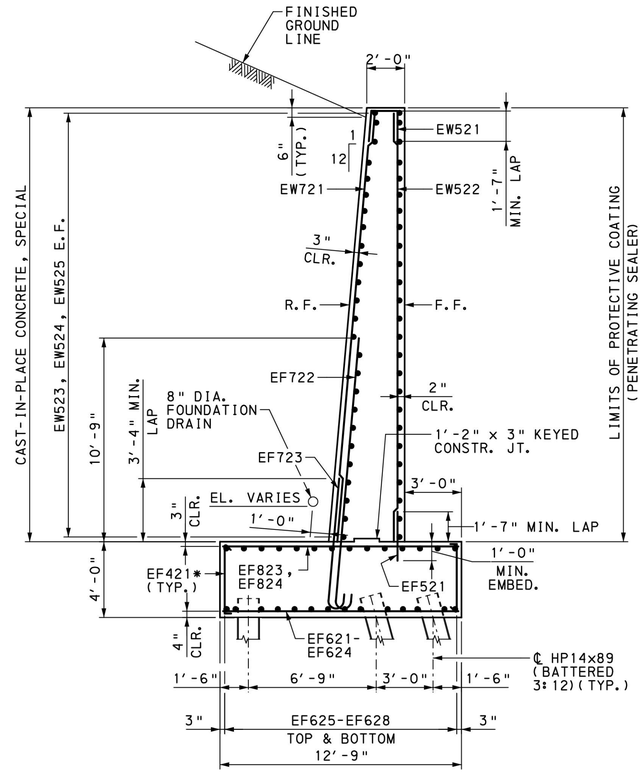

WING C TYPICAL SECTION

2′ 0 2′ 4′

NOTES:

1. FOR WATERPROOFING DETAIL, SEE SHEET 13.
2. FOR BAR SCHEDULE, SEE SHEETS 22 & 23.
3. FOR BACKFILL DETAIL, SEE SHEET 3.

LEGEND:

* EF421 @ 48" MAX. SPACING IN BOTH DIRECTIONS. ALTERNATE 90° AND 135° HOOKS EVERY OTHER TIE.

Mark	Description	By	Chk'd.	Recm'd.	Date
REVISIONS					

S.R. 0051 PREVIOUSLY KNOWN AS L.R. 288

CERTIFIED CORRECT PLANS
Professional Engineer
Approved by Bureau of Technical Utility Services
PA PUBLIC UTILITY COMMISSION
ATTEST Secretary

COMMONWEALTH OF PENNSYLVANIA
REGISTERED PROFESSIONAL
CHRISTOPHER T. VOLLMER
ENGINEER NO PE-0683

COMMONWEALTH OF PENNSYLVANIA
DEPARTMENT OF TRANSPORTATION

WESTMORELAND COUNTY
S.R. 0070 SECTION E10
SEGMENT 40/41 OFFSET 1725/1692 (NB/SB)
WHEELING & LAKE ERIE RAILROAD (MP C-17.01)
OVER S.R. 0051 STATION 782+91.42
SINGLE SPAN THROUGH GIRDER BRIDGE
WING C DETAILS

RECOMMENDED February 3rd, 2022

SHEET 20 OF 44

DES: CJP | DWN: CJP | CHK: CTV

\\gfnet-pw.bentley.com#gfnet-pw-01\Documents\Projects\61636\INPUT\COMP_01\CIVIL\BRDGS\W&LE RR BRIDGE\SHT19_WING C.dgn
1/4/2022 2:54:04 PM

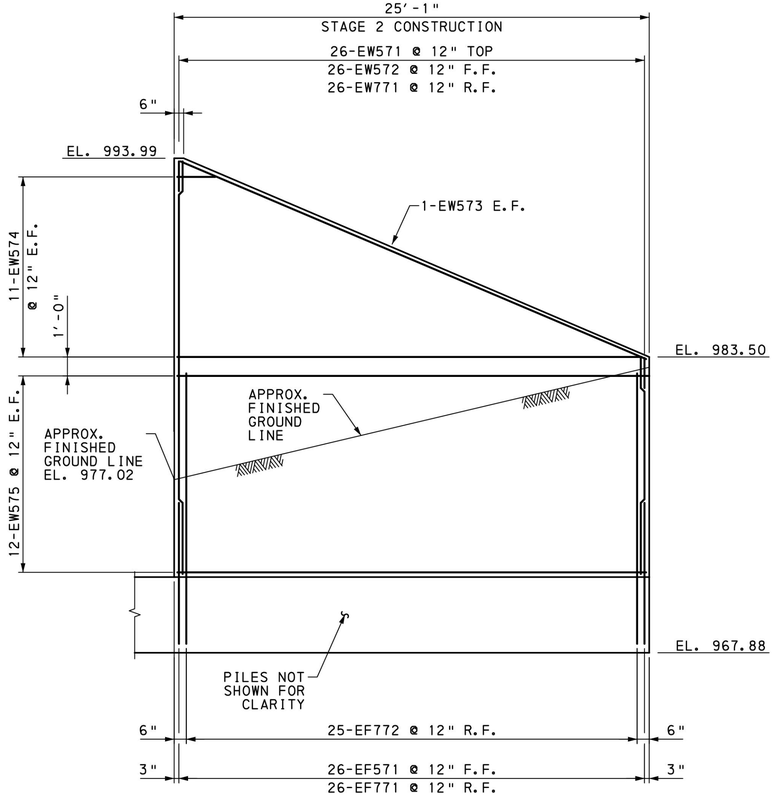

WING D ELEVATION

4' 2' 0 2'

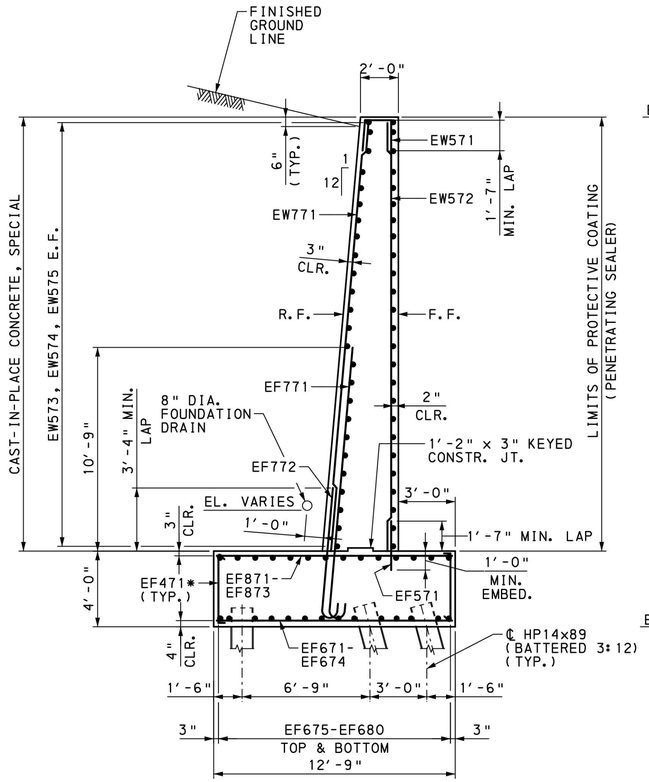

WING D TYPICAL SECTION

2' 0 2' 4'

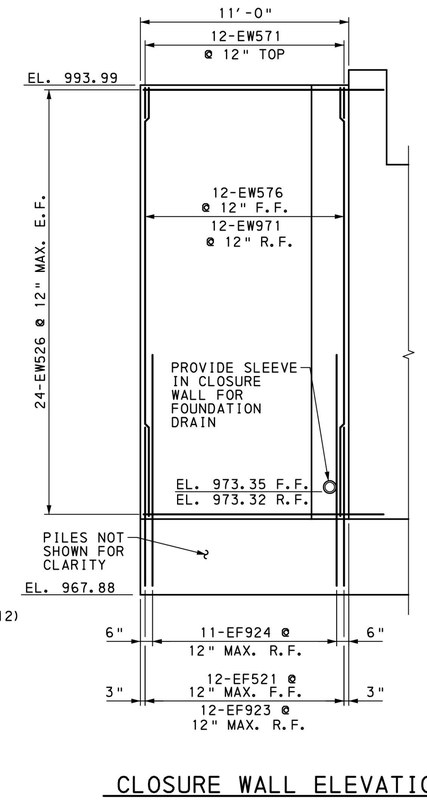

CLOSURE WALL ELEVATION

2' 0 2' 4'

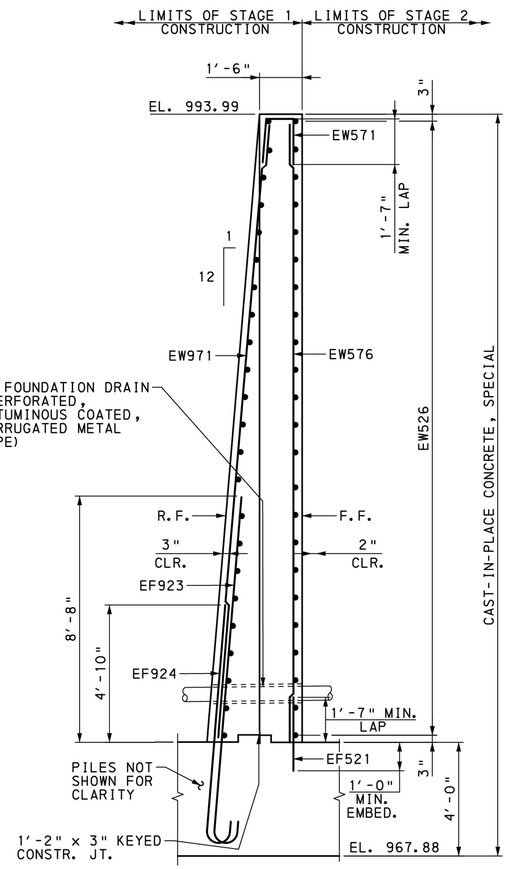

CLOSURE WALL TYPICAL SECTION

1' 0 1' 2' 3'

NOTES:

1. FOR WATERPROOFING DETAIL, SEE SHEET 13.
2. FOR BAR SCHEDULE, SEE SHEETS 22 & 23.
3. FOR BACKFILL DETAIL, SEE SHEET 3.

LEGEND:

* EF471 @ 48" MAX. SPACING IN BOTH DIRECTIONS. ALTERNATE 90° AND 135° HOOKS EVERY OTHER TIE.

CERTIFIED CORRECT PLANS
David R. Hallbach
Professional Engineer
Approved by Bureau of Technical Utility Services
PA PUBLIC UTILITY COMMISSION
ATTEST Secretary

COMMONWEALTH OF PENNSYLVANIA REGISTERED PROFESSIONAL CHRISTOPHER T. VOLLMER ENGINEER NO. PE-0683

Mark	Description	By	Chk'd.	Recm'd.	Date
REVISIONS					

S.R. 0051 PREVIOUSLY KNOWN AS L.R. 288

COMMONWEALTH OF PENNSYLVANIA
DEPARTMENT OF TRANSPORTATION

WESTMORELAND COUNTY
S.R. 0070 SECTION E10

SEGMENT 40/41 OFFSET 1725/1692 (NB/SB)
WHEELING & LAKE ERIE RAILROAD (MP C-17.01)
OVER S.R. 0051 STATION 782+91.42
SINGLE SPAN THROUGH GIRDER BRIDGE

WING D DETAILS

RECOMMENDED February 3rd, 2022

SHEET 21 OF 44

DES: CJP | DWN: CJP | CHK: CTV

pw:\\gfnet-pw.bentley.com:gfnet-pw-01\Documents\Projects\61636\INPUT\COMP_01\CIVIL\BRDG\W&LE RR BRIDGE\SHT20_WING D.dgn
1/4/2022 2:54:09 PM

ABUTMENT 2 - STAGE 1

MARK	SIZE	NUMBER	LENGTH	TYPE	A	B	C	D	E	G	H	J	K	REMARKS
EA521	5	27	6′-6½"	STR										
EA522	5	10	8′-6½"	STR										
EA523	5	21	10′-0"	S10		4′-3"	1′-6"	4′-3"						
EA524	5	21	4′-3"	STR										
EA525	5	9	18′-3"	S11	2′-5"	4′-1"	4′-1"	2′-2"	5′-6"					
EA526	5	6	6′-10"	STR										
EA527	5	4	5′-10"	3	1′-10"	4′-0"	6⅞"							
EA528	5	17	33′-10"	STR										
EA529	5	30	7′-4"	3	1′-8"	5′-8"	5⅝"							
EA530	5	19	12′-9"	S11	2′-5"	4′-1"	4′-1"	2′-2"	-					
EA531	5	12	9′-11"	17		3′-0"	3′-11"	3′-0"						
EA532	5	10	10′-10"	17		3′-0"	4′-10"	3′-0"						
EA721	7	17	21′-7"	STR										
EA722	7	30	17′-8"	STR										
EA723	7	38	33′-10"	STR										
EA921	9	31	22′-11"	STR										
EF421	4	81	4′-2"	T9	4½"	3′-5"				4½"	3"			
EF521	5	25	2′-7"	STR										
EF621	6	2	12′-5"	STR										
EF622	6	5	13′-1"	STR										
EF623	6	5	12′-11" TO 8′-11"	STR										VARY 1 EA. BY 1′-0"
EF624	6	6	7′-5" TO 3′-5"	STR										VARY 1 EA. BY 9⅝"
EF625	6	2	17′-8" TO 17′-3"	STR										VARY 1 EA. BY 5"
EF626	6	3	18′-6" TO 17′-0"	STR										VARY 1 EA. BY 9"
EF627	6	7	15′-6" TO 10′-3"	STR										VARY 1 EA. BY 10½"
EF628	6	2	8′-9" TO 8′-3"	STR										VARY 1 EA. BY 6"
EF629	6	2	37′-0" TO 36′-7"	STR										VARY 1 EA. BY 5"
EF630	6	18	37′-2"	STR										
EF631	6	28	6′-2"	3	2′-10"	3′-4"	2′-4"							
EF632	6	4	6′-0"	STR										
EF633	6	14	17′-4" TO 8′-3"	STR										VARY 1 EA. BY 8⅜"
EF721	7	64	3′-8"	STR										
EF722	7	13	15′-4"	T5	10"	14′-6"						7"		
EF723	7	12	7′-11"	T5	10"	7′-1"						7"		
EF821	8	40	37′-2"	STR										
EF822	8	110	20′-0"	STR										
EF823	8	8	12′-5"	STR										
EF824	8	11	12′-8" TO 4′-2"	STR										VARY 1 EA. BY 10¾6"
EF921	9	29	17′-7"	T5	1′-3"	16′-4"						11¾"		
EF922	9	28	9′-7"	T5	1′-3"	8′-4"						11¾"		
EF923	9	12	13′-8"	T5	1′-3"	12′-5"						11¾"		
EF924	9	11	9′-10"	T5	1′-3"	8′-7"						11¾"		
EW521	5	13	4′-9"	16		1′-7"	1′-7"	1′-7"			1′-6⅞"		1½"	
EW522	5	13	22′-7" TO 16′-5"	STR										VARY 1 EA. BY 6⅛"
EW523	5	2	12′-10"	STR										
EW524	5	14	11′-2" TO 2′-0"	STR										VARY 2 EA. BY 1′-6¼"
EW525	5	34	11′-5"	STR										
EW526	5	48	13′-3"	T5	7"	12′-8"						5"		
EW721	7	13	22′-7" TO 16′-5"	STR										VARY 1 EA. BY 6⅛"

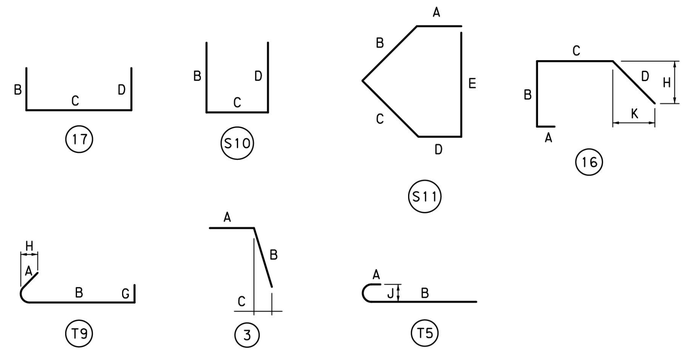

NOTES:

ALL DIMENSIONS ARE OUT-TO-OUT OF BAR EXCEPT "A" AND "G" ON STANDARD 180° AND 135° HOOKS.

"J" DIMENSIONS ON 180° HOOKS TO BE SHOWN ONLY WHERE NECESSARY TO RESTRICT HOOK SIZE, OTHERWISE STANDARD HOOK SIZES ARE TO BE USED.

FIGURES IN CIRCLES SHOW TYPES.

FOR REINFORCEMENT BAR FABRICATION DETAILS, REFER TO STANDARD DRAWING BC-736M.

BAR MARK LEGEND

EF501
- EPOXY COATED
- CODE LETTER
- SIZE
- NUMBERING

CODE LETTERS FOR BAR MARKS

A = ABUTMENT
F = FOOTING
W = WING

CERTIFIED CORRECT PLANS
Donald R. Pollock
Professional Engineer
Approved by Bureau of Technical Utility Services
PA PUBLIC UTILITY COMMISSION
ATTEST
Secretary

Mark	Description	By	Chk'd.	Recm'd.	Date
REVISIONS					

S.R. 0051 PREVIOUSLY KNOWN AS L.R. 288

COMMONWEALTH OF PENNSYLVANIA
DEPARTMENT OF TRANSPORTATION

WESTMORELAND COUNTY
S.R. 0070 SECTION E10
SEGMENT 40/41 OFFSET 1725/1692 (NB/SB)
WHEELING & LAKE ERIE RAILROAD (MP C-17.01)
OVER S.R. 0051 STATION 782+91.42
SINGLE SPAN THROUGH GIRDER BRIDGE
ABUTMENT 2 - STAGE 1 BAR SCHEDULE

COMMONWEALTH OF PENNSYLVANIA REGISTERED PROFESSIONAL
CHRISTOPHER T. VOLLMER
ENGINEER NO PE-068183

RECOMMENDED February 3rd, 2022

SHEET 22 OF 44

DES: CJP | DWN: CJP | CHK:

pw:\\gfnet-pw.bentley.com:gfnet-pw-01\Documents\Projects\61636\INPUT\COMP_01\CIVIL\BRDGW&LE RR BRIDGE\SHT21_ABUT 2_REBAR SCHEDULE.dgn
1/4/2022 2:54:10 PM

ABUTMENT 2 - STAGE 2

MARK	SIZE	NUMBER	LENGTH	TYPE	A	B	C	D	E	G	H	J	K	REMARKS
EA571	5	17	6′-6½"	STR										
EA572	5	9	18′-2"	S11	2′-4"	4′-1"	4′-1"	2′-2"	5′-6"					
EA573	5	6	6′-10"	STR										
EA574	5	19	12′-8"	S11	2′-4"	4′-1"	4′-1"	2′-2"						
EA771	7	17	21′-7"	STR										
EF471	4	28	4′-2"	T9	4½"	3′-5"				4½"	3"			
EF571	5	26	3′-5"	STR										
EF671	6	5	5′-3" TO 1′-0"	STR										VARY 1 EA. BY 1′-0¾"
EF672	6	6	12′-3" TO 7′-0"	STR										VARY 1 EA. BY 1′-0⅝"
EF673	6	6	14′-0" TO 12′-5"	STR										VARY 1 EA. BY 3¾"
EF674	6	14	12′-5"	STR										
EF675	6	2	29′-9"	STR										
EF676	6	3	28′-10" TO 27′-5"	STR										VARY 1 EA. BY 8½"
EF677	6	7	26′-3" TO 21′-8"	STR										VARY 1 EA. BY 9⅛"
EF678	6	2	20′-6" TO 20′-0"	STR										VARY 1 EA. BY 6"
EF679	6	3	4′-3" TO 1′-0"	STR										VARY 1 EA. BY 1′-7½"
EF680	6	14	29′-9" TO 20′-0"	STR										VARY 1 EA. BY 9"
EF771	7	26	15′-4"	T5	10"	14′-6"						7"		
EF772	7	25	7′-11"	T5	10"	7′-1"						7"		
EF871	8	12	12′-11" TO 1′-0"	STR										VARY 1 EA. BY 1′-1"
EF872	8	5	14′-1" TO 12′-5"	STR										VARY 1 EA. BY 5"
EF873	8	15	12′-5"	STR										
EW571	5	38	4′-3"	16		1′-7"	1′-1"	1′-7"			1′-6⅞"		1½"	
EW572	5	26	21′-8" TO 11′-4"	STR										VARY 1 EA. BY 5"
EW573	5	2	26′-8"	STR										
EW574	5	22	24′-6" TO 2′-0"	STR										VARY 2 EA. BY 2′-3"
EW575	5	24	24′-9"	STR										
EW576	5	12	21′-9"	STR										
EW771	7	26	21′-8" TO 11′-4"	STR										VARY 1 EA. BY 5"
EW971	9	12	21′-10"	STR										

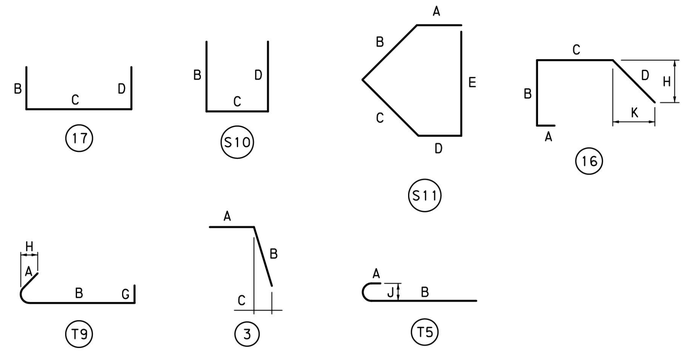

NOTES:

ALL DIMENSIONS ARE OUT-TO-OUT OF BAR EXCEPT "A" AND "G" ON STANDARD 180° AND 135° HOOKS.

"J" DIMENSIONS ON 180° HOOKS TO BE SHOWN ONLY WHERE NECESSARY TO RESTRICT HOOK SIZE, OTHERWISE STANDARD HOOK SIZES ARE TO BE USED.

FIGURES IN CIRCLES SHOW TYPES.

FOR REINFORCEMENT BAR FABRICATION DETAILS, REFER TO STANDARD DRAWING BC-736M.

BAR MARK LEGEND

EF501

EPOXY COATED
CODE LETTER
SIZE
NUMBERING

CODE LETTERS FOR BAR MARKS

A = ABUTMENT
F = FOOTING
W = WING

Mark	Description	By	Chk'd.	Recm'd.	Date
REVISIONS					

S.R. 0051 PREVIOUSLY KNOWN AS L.R. 288

CERTIFIED CORRECT PLANS
Professional Engineer
Approved by Bureau of Technical Utility Services
PA PUBLIC UTILITY COMMISSION
ATTEST Secretary

COMMONWEALTH OF PENNSYLVANIA
REGISTERED PROFESSIONAL
CHRISTOPHER T. VOLLMER
ENGINEER NO PE-068I3

COMMONWEALTH OF PENNSYLVANIA
DEPARTMENT OF TRANSPORTATION

WESTMORELAND COUNTY
S.R. 0070 SECTION E10
SEGMENT 40/41 OFFSET 1725/1692 (NB/SB)
WHEELING & LAKE ERIE RAILROAD (MP C-17.01)
OVER S.R. 0051 STATION 782+91.42
SINGLE SPAN THROUGH GIRDER BRIDGE
ABUTMENT 2 - STAGE 2 BAR SCHEDULE

RECOMMENDED February 3rd, 2022

SHEET 23 OF 44

DES: CJP | DWN: CJP | CHK: CMC

pw:\\gfnet-pw.bentley.com:gfnet-pw-01\Documents\Projects\61636\INPUT\COMP_01\CIVIL\BRDG\W&LE RR BRIDGE\SHT21A_ABUT 2_REBAR SCHEDULE(2).dgn
1/4/2022 2:54:13 PM

THROUGH GIRDER BEARING SCHEDULE

BEARING LOCATION			ABUTMENT 1		ABUTMENT 2	
BEARING TYPE			EXPANSION		FIXED	
			MIN.	MAX.	MIN.	MAX.
NUMBER REQUIRED			2		2	
LOAD COMB I	VERTICAL DESIGN LOAD (KIP)	DL	286	288	286	288
		LL+I+RE	0	506	0	506
	HORIZONTAL DESIGN LOAD (KIP)	TRANSVERSE	0	0	0	0
		LONGITUDINAL	0	0	0	0
LOAD COMB II	VERTICAL DESIGN LOAD (KIP)	DL	229	230	229	230
		W	-8	8	-8	8
	HORIZONTAL DESIGN LOAD (KIP)	TRANSVERSE	-17	17	-17	17
		LONGITUDINAL	0	0	-9	9
LOAD COMB III	VERTICAL DESIGN LOAD (KIP)	DL	229	230	229	230
		L+I+RE+0.5WL +WLL+LF+F	-34	438	-34	438
	HORIZONTAL DESIGN LOAD (KIP)	TRANSVERSE	-12	12	-12	12
		LONGITUDINAL	0	5	-113	113
LOAD COMB VII	VERTICAL DESIGN LOAD (KIP)	DL	191	192	191	192
		EQ	0	0	0	0
	HORIZONTAL DESIGN LOAD (KIP)	TRANSVERSE	0	20	6	20
		LONGITUDINAL	0	0	6	20
			6 ANCHOR BOLTS (PER BEARING)		4 ANCHOR BOLTS (PER BEARING)	

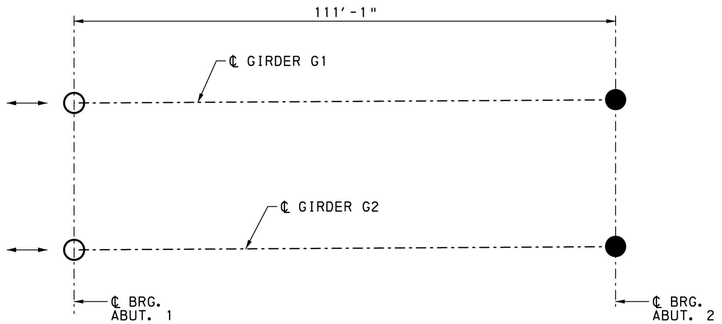

BEARING LOCATION PLAN
NOT TO SCALE

LEGEND:

- ● - FIXED BEARING
- ○ - EXPANSION BEARING
- ←→ - MOVEMENT DIRECTION

BEARING NOTES:

1. PIN MATERIAL SHALL BE ASTM A668, CLASS F GRADE 50.
2. MATERIAL FOR BEARING COMPONENTS SHALL BE ASTM A709 GRADE 50, EXCEPT AS NOTED. FOR PLATE THICKNESSES OVER 4" PROVIDE ASTM A572, GRADE 42.
3. BEARING ASSEMBLY WELDMENTS SHALL BE STRESS RELIEVED BY HEAT TREATMENT PER AASHTO/AWS D1.5 2015 BRIDGE WELDING CODE PRIOR TO FINISHED MACHINING.
4. THE PARTS OF MEMBERS IN CONTACT SHALL BE FACED AND BEARING SURFACES SHALL BE PLANED SMOOTH BEFORE ANY WELDING IS STARTED.
5. BEARING PINS, ROCKERS AND ALL SURFACES IN CONTACT WITH PINS OR ROCKERS SHALL BE GIVEN AN ALL-OVER SMOOTH FINISH. SURFACE FINISH ROUGHNESS AT THESE SURFACES TO BE AT LEAST 125 MICRO INCHES MEASURED IN ACCORDANCE WITH ANSI/ASME B46.1, SURFACE TEXTURE.
6. BEARINGS SHALL BE SHOP FITTED TO THROUGH GIRDERS AND MATCHED MARKED, THEN ASSEMBLED IN UNITS FOR SHIPMENT.
7. ANCHOR BOLTS: ASTM F1554 GRADE 105 GALVANIZED PER PUBLICATION 408 SECTION 1105.02 (c) 3.
8. ANCHOR BOLT NUTS TO BE INSTALLED SNUG-TIGHT, EXCEPT AS NOTED.
9. REFERENCE A.R.E.M.A. CHAPTER 15, PART 11 FOR ADDITIONAL FABRICATION, TESTING, AND CONSTRUCTION REQUIREMENTS.

BEARING SCHEDULE NOTES:

1. DL - MINIMUM DEAD LOAD VALUE BASED ON NORMAL BALLAST CONDITION (MINIMUM BALLAST = 16" AVERAGE TOTAL THICKNESS INCLUDING TIE DEPTH) MAXIMUM DEAD LOAD VALUE INCLUDES WEIGHT OF ADDITIONAL 6" OF FUTURE BALLAST
   LL + I + RE = LIVE LOAD + IMPACT + ROCKING EFFECT
   W = WIND LOAD ON UNLOADED STRUCTURE
   WL= WIND LOAD ON LOADED STRUCTURE
   WLL = WIND LOAD ON LIVE LOAD
   LF = LONGITUDINAL FORCE FROM LIVE LOAD
   F = LONGITUDINAL FORCE DUE TO FRICTION
   EQ = EARTHQUAKE (SERVICEABILITY LIMIT STATE)
2. THE NOTED FORCES ARE ACTUAL SERVICE LOADS. THE PERCENTAGE INCREASE OF THE ALLOWABLE UNIT STRESS (AS PER A.R.E.M.A. CHAPTER 15, SECTION 1.3.14.3) HAS NOT BEEN FACTORED INTO THESE VALUES.
3. GROUP LOADS SHOWN IN BEARING SCHEDULE REPRESENT GOVERNING LOAD CASES.
4. GROUP LOADS:
   I - DL + LL + I + RE
   II - DL + W
   III - DL + LL + I + RE + 0.5WL + WLL + LF + F
   VII - DL + EQ
5. BEARINGS DESIGNED AND DETAILED FOR A MAXIMUM ECCENTRICITY OF 1.42" IN MOVEMENT DIRECTION (INCLUDES THERMAL MOVEMENT, LIVE LOAD ROTATION AND CONSTRUCTION TOLERANCE). TOTAL MOVEMENT RANGE = 2.84".

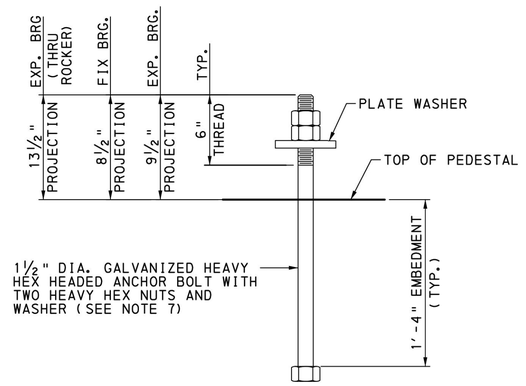

ANCHOR BOLT DETAIL
NOT TO SCALE

CERTIFIED CORRECT PLANS
Professional Engineer
Approved by Bureau of Technical Utility Services
PA PUBLIC UTILITY COMMISSION
ATTEST Secretary

NOTES:

1. FOR ANCHOR BOLT LAYOUT AT BEARINGS, SEE SHEETS 25 & 26.

Mark	Description	By	Chk'd.	Recm'd.	Date
REVISIONS					

S.R. 0051 PREVIOUSLY KNOWN AS L.R. 288

COMMONWEALTH OF PENNSYLVANIA
DEPARTMENT OF TRANSPORTATION

WESTMORELAND COUNTY
S.R. 0070 SECTION E10
SEGMENT 40/41 OFFSET 1725/1692 (NB/SB)
WHEELING & LAKE ERIE RAILROAD (MP C-17.01)
OVER S.R. 0051 STATION 782+91.42
SINGLE SPAN THROUGH GIRDER BRIDGE
BEARING LOCATION PLAN & NOTES

COMMONWEALTH OF PENNSYLVANIA
REGISTERED PROFESSIONAL
CHRISTOPHER T. VOLLMER
ENGINEER NO PE-068383

RECOMMENDED February 3rd, 2022

SHEET 24 OF 44

DES: CJP | DWN: CJP | CHK: CTV

pw:\\gfnet-pw.bentley.com:gfnet-pw-01\Documents\Projects\61636\INPUT\COMP_01\CIVIL\BRDG\W&LE RR BRIDGE\SHT22_BEARING LOCATION PLAN & NOTES.dgn
1/4/2022 2:54:15 PM

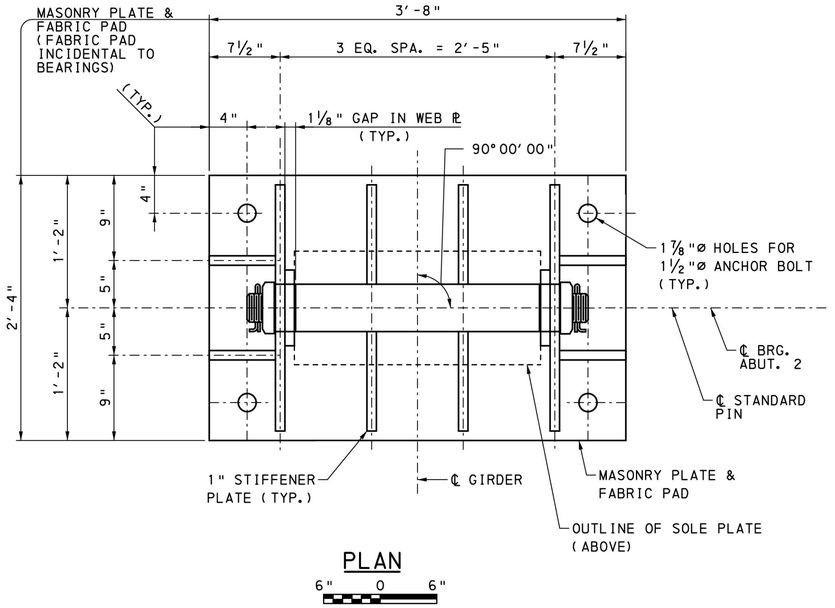

PLAN

6" 0 6"

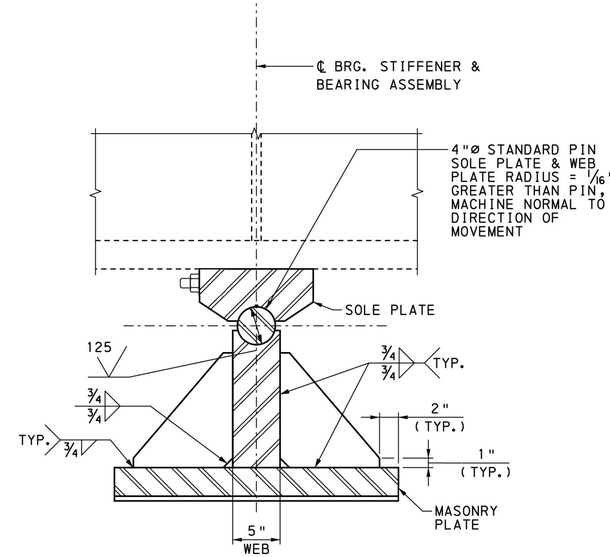

SECTION A-A

6" 0 6"

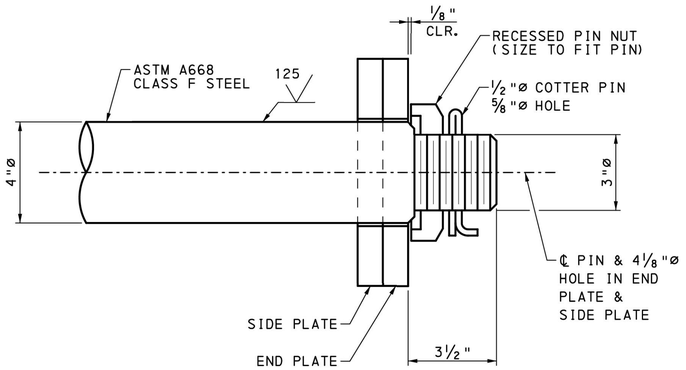

PIN DETAIL

NOT TO SCALE

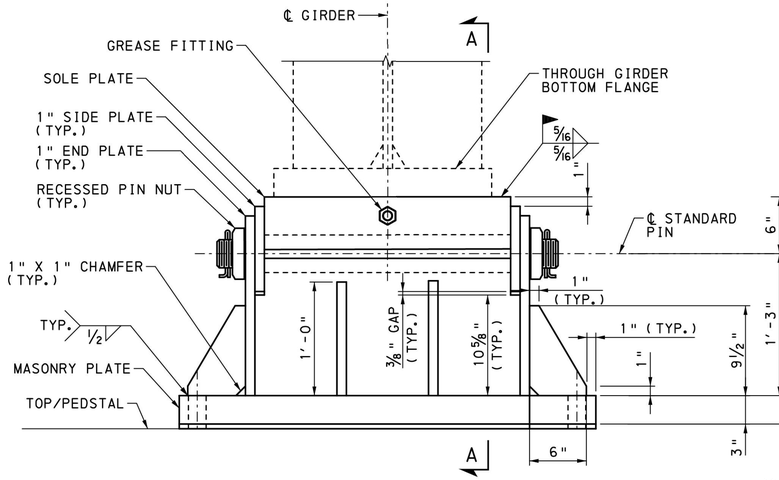

ELEVATION

6" 0 6"

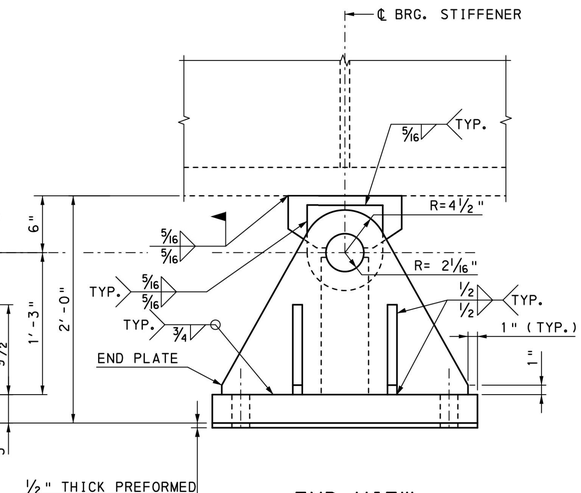

END VIEW

6" 0 6"

NOTES:

1. PROVIDE PREFORMED FABRIC BEARING PADS IN ACCORDANCE WITH THE SPECIFICATIONS FOR FABRICATED STRUCTURAL STEEL.
2. FOR BEARING NOTES, SEE SHEET 24.
3. FOR SOLE PLATE AND SIDE PLATE DETAILS, SEE SHEET 26.

Mark	Description	By	Chk'd.	Recm'd.	Date

REVISIONS

S.R. 0051 PREVIOUSLY KNOWN AS L.R. 288

CERTIFIED CORRECT PLANS
Daniel R. Hilbrich
Professional Engineer
Approved by Bureau of Technical Utility Services
PA PUBLIC UTILITY COMMISSION
ATTEST Rosemary Chiavetta
Secretary

COMMONWEALTH OF PENNSYLVANIA
REGISTERED PROFESSIONAL
CHRISTOPHER T. VOLLMER
ENGINEER NO PE-0683

COMMONWEALTH OF PENNSYLVANIA
DEPARTMENT OF TRANSPORTATION

WESTMORELAND COUNTY
S.R. 0070 SECTION E10
SEGMENT 40/41 OFFSET 1725/1692 (NB/SB)
WHEELING & LAKE ERIE RAILROAD (MP C-17.01)
OVER S.R. 0051 STATION 782+91.42
SINGLE SPAN THROUGH GIRDER BRIDGE
FIXED BEARING DETAILS

RECOMMENDED February 3rd, 2022

SHEET 25 OF 44

DES: CJP | DWN: CJP | CHK: CTV

pw:\\gfnet-pw.bentley.com:gfnet-pw-01\Documents\Projects\61636\INPUT\COMP_01\CIVIL\BRDG\W&LE RR BRIDGE\SHT23_FIXED BEARING DETAILS.dgn
1/4/2022 2:54:16 PM

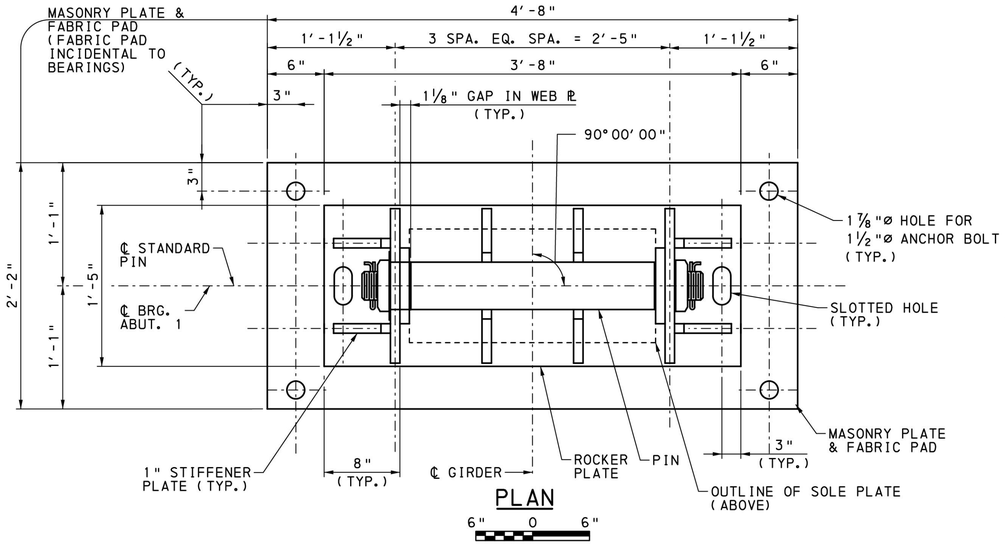

PLAN

6" 0 6"

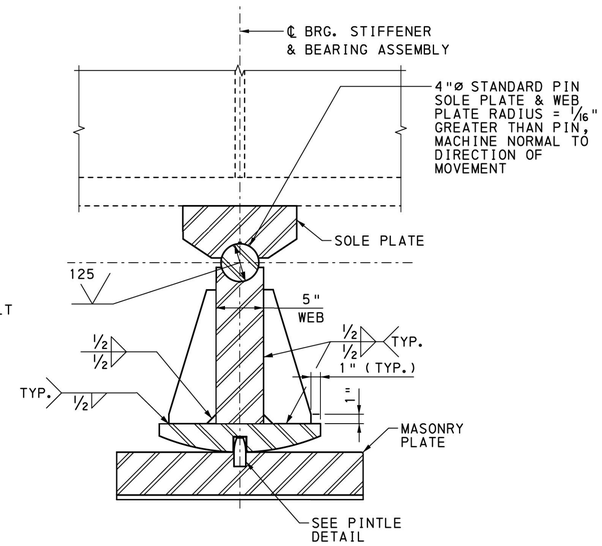

SECTION A-A

6" 0 6"

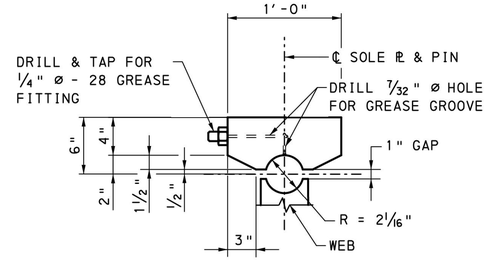

SOLE PLATE DETAIL

6" 0 6"

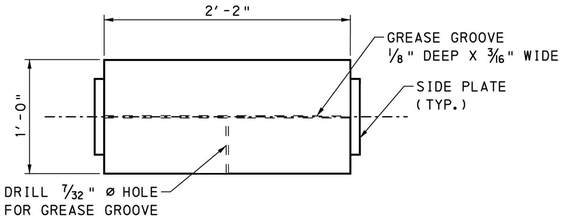

SOLE PLATE PLAN

6" 0 6"

ELEVATION

6" 0 6"

END VIEW

6" 0 6"

SIDE PLATE DETAIL

6" 0 6"

PINTLE DETAIL

6" 0 6"

NOTES:

1. PROVIDE PREFORMED FABRIC BEARING PADS IN ACCORDANCE WITH THE SPECIFICATIONS FOR FABRICATED STRUCTURAL STEEL.
2. FOR BEARING NOTES, SEE SHEET 24.

CERTIFIED CORRECT PLANS
Professional Engineer
Approved by Bureau of Technical Utility Services
PA PUBLIC UTILITY COMMISSION
ATTEST Secretary

Mark	Description	By	Chk'd.	Recm'd.	Date
	REVISIONS				

S.R. 0051 PREVIOUSLY KNOWN AS L.R. 288

COMMONWEALTH OF PENNSYLVANIA
DEPARTMENT OF TRANSPORTATION

WESTMORELAND COUNTY
S.R. 0070 SECTION E10

SEGMENT 40/41 OFFSET 1725/1692 (NB/SB)
WHEELING & LAKE ERIE RAILROAD (MP C-17.01)
OVER S.R. 0051 STATION 782+91.42
SINGLE SPAN THROUGH GIRDER BRIDGE

EXPANSION BEARING DETAILS

COMMONWEALTH OF PENNSYLVANIA REGISTERED PROFESSIONAL CHRISTOPHER T. VOLLMER ENGINEER NO PE-0683

RECOMMENDED February 3rd, 2022

SHEET 26 OF 44

DES: CJP | DWN: CJP | CHK: CTV

pw:\\gfnet-pw.bentley.com:gfnet-pw-01\Documents\Projects\61636\INPUT\COMP_01\CIVIL\BRDG\W&LE RR BRIDGE\SHT24_EXPANSION BEARING DETAILS.dgn
1/4/2022 2:54:18 PM

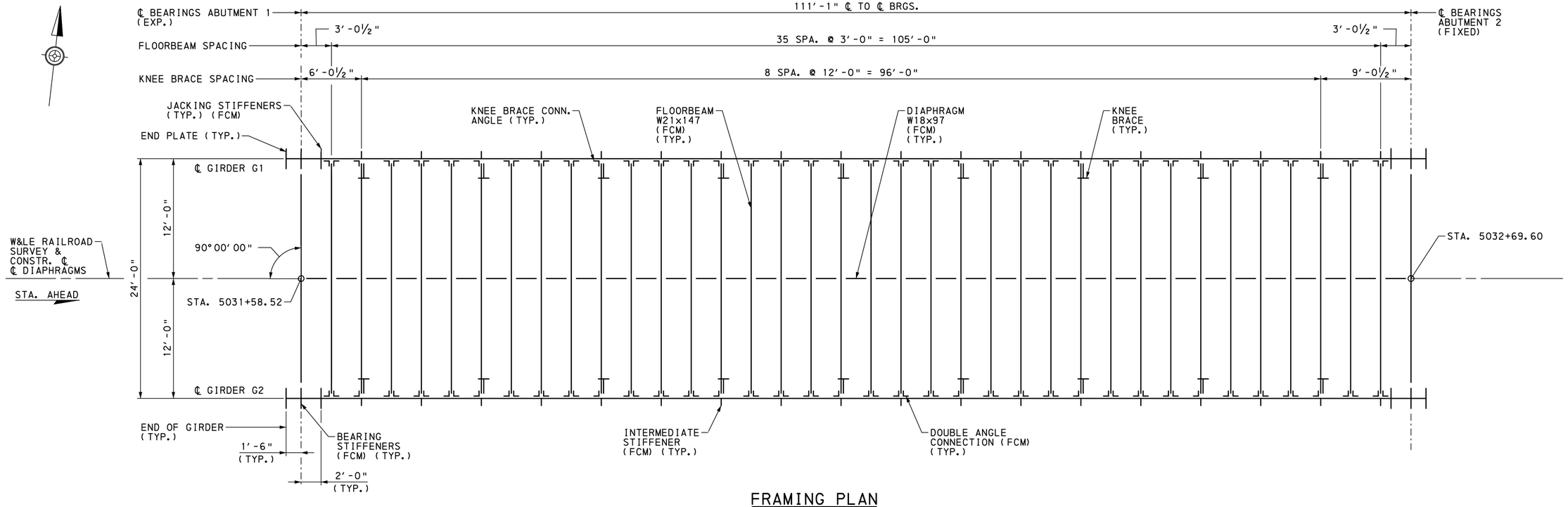

FRAMING PLAN

2′ 0 2′ 4′ 6′

SCHEDULE OF LOADS, STRESSES AND SECTIONS								
		GIRDER * (SIMPLE SPAN DESIGN)				FLOORBEAM ** (SIMPLE SPAN DESIGN)			
SPAN		111′-1" (SIMPLE)				24′-0" (SIMPLE)			
		MAX. MOMENT ℄ SPAN (K-FT)		MAX. SHEAR AT ABUTMENT (KIP)		MAX. MOMENT ℄ SPAN (K-FT)		MAX. SHEAR AT THROUGH GIRDER (KIP)	
DEAD LOAD		7,557		288		94		12	
LIVE LOAD + IMPACT		10,891		506		449		53	
TOTAL		18,448		794		543		65	
SECTION USED		2⅝" x 24" FLANGE PLATES ⅞" x 108" WEB PLATE				W21x147			
SECTION MODULUS OR AREA USED	NET	8432 in^3		94.5 in^2		329 in^3		13.5 in^2	
	GROSS	8432 in^3		94.5 in^2		329 in^3		13.5 in^2	
STRESSES		MAX. DESIGN	ALLOWABLE	MAX. DESIGN	ALLOWABLE	MAX. DESIGN	ALLOWABLE	MAX. DESIGN	ALLOWABLE
COMPRESSION		26.3 KSI	26.9 KSI	---	---	19.8 KSI	27.5 KSI	---	---
TENSION		26.3 KSI	27.5 KSI	---	---	19.8 KSI	27.5 KSI	---	---
SHEAR IN WEB PLATE		---	---	8.4 KSI	17.5 KSI	---	---	4.8 KSI	17.5 KSI

* CONTROLLING LIVE LOAD FOR THROUGH GIRDERS IS COOPER E-80 WITH IMPACT (INCLUDING ROCKING EFFECT)

** CONTROLLING LIVE LOAD FOR THROUGH GIRDERS IS ALTERNATE 4-AXLE LIVE LOAD WITH IMPACT (INCLUDING ROCKING EFFECT)

DES: CJP | DWN: CJP | CHK: CTV

NOTES:

1. PROVIDE INTERMEDIATE STIFFENERS ON THE OUTSIDE FACE OF THE GIRDER, UNLESS NOTED OTHERWISE.
2. FOR BEARING LAYOUT, SEE SHEET 24.
3. FOR ERECTION NOTES, SEE SHEET 31.

LEGEND:

FCM - FRACTURE CRITICAL MEMBER

CERTIFIED CORRECT PLANS
Daniel R. Hillman
Professional Engineer
Approved by Bureau of Technical Utility Services
PA PUBLIC UTILITY COMMISSION
ATTEST
Secretary

COMMONWEALTH OF PENNSYLVANIA REGISTERED PROFESSIONAL CHRISTOPHER T. VOLLMER ENGINEER NO PE-0683

Mark	Description	By	Chk'd.	Recm'd.	Date
REVISIONS					

S.R. 0051 PREVIOUSLY KNOWN AS L.R. 288

COMMONWEALTH OF PENNSYLVANIA
DEPARTMENT OF TRANSPORTATION

WESTMORELAND COUNTY
S.R. 0070 SECTION E10

SEGMENT 40/41 OFFSET 1725/1692 (NB/SB)
WHEELING & LAKE ERIE RAILROAD (MP C-17.01)
OVER S.R. 0051 STATION 782+91.42
SINGLE SPAN THROUGH GIRDER BRIDGE
FRAMING PLAN

RECOMMENDED February 3rd, 2022

SHEET 27 OF 44

pw:\\gfnet-pw.bentley.com:gfnet-pw-01\Documents\Projects\61636\INPUT\COMP_01\CIVIL\BRDGS\W&LE RR BRIDGE\SHT25_FRAMING PLAN.dgn
1/4/2022 2:54:21 PM

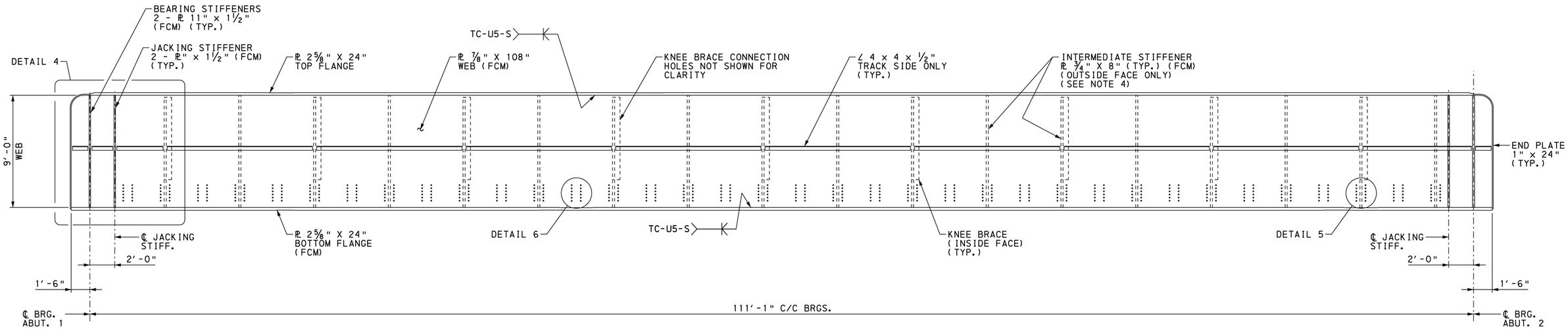

GIRDER ELEVATION

GIRDER G1 INSIDE FACE SHOWN
GIRDER G2 OPPOSITE HAND

2' 0 2' 4'

TABLE OF CAMBER ORDINATES (IN)											
	0.0L	0.1L	0.2L	0.3L	0.4L	0.5L	0.6L	0.7L	0.8L	0.9L	1.0L
STEEL DEAD LOAD	0.00	0.14	0.28	0.38	0.45	0.47	0.45	0.38	0.28	0.14	0.00
SUPERIMPOSED DEAD LOAD	0.00	0.18	0.36	0.47	0.56	0.59	0.56	0.47	0.36	0.18	0.00
FUTURE SUPERIMPOSED DEAD LOAD	0.00	0.06	0.11	0.15	0.17	0.18	0.17	0.15	0.11	0.06	0.00
TOTAL DEAD LOAD CAMBER	0.00	0.38	0.75	1.00	1.19	1.25	1.19	1.00	0.75	0.38	0.00

CAMBER NOTES:

1. STEEL DEAD LOAD CAMBER IS DUE TO THE WEIGHT OF THE STRUCTURAL STEEL ONLY. THIS INCLUDES THE WEIGHT OF THROUGH GIRDER AND ITS ATTACHMENTS, ALL FRAMING MEMBERS, CONNECTION PLATES, SIDE PLATES, CURB PLATES, AND ALL MISCELLANEOUS STEEL COMPONENTS.
2. SUPER IMPOSED DEAD LOAD CAMBER IS DUE TO THE WEIGHT OF BALLAST, WATERPROOFING, TIES AND RAILS.
3. FUTURE SUPERIMPOSED DEAD LOAD IS DUE TO THE WEIGHT OF ADDITIONAL 6 INCHES OF BALLAST.

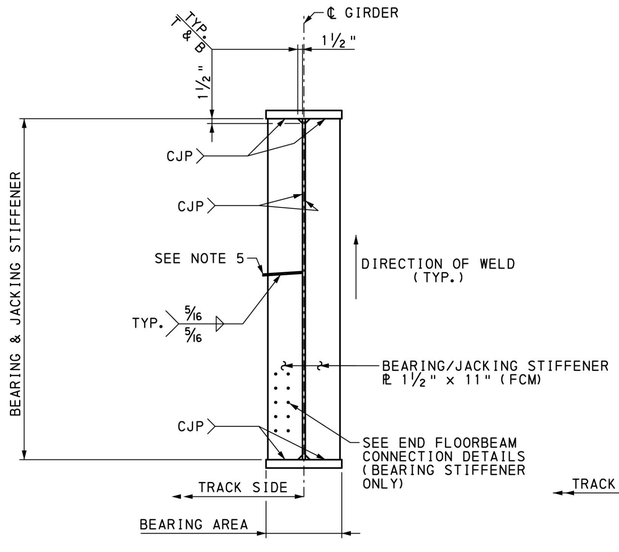

THROUGH GIRDER BEARING / JACKING STIFFENER DETAIL

NOT TO SCALE

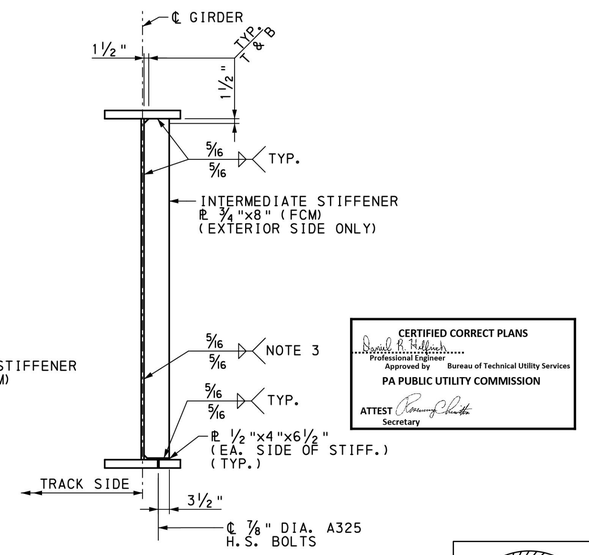

INTERMEDIATE STIFFENER DETAIL

NOT TO SCALE

NOTES:

1. MATERIAL OR MEMBERS DESIGNATED (FCM) ARE FRACTURE CRITICAL MEMBERS SUBJECTED TO THE REQUIREMENTS INDICATED IN THE GENERAL NOTES.
2. FABRICATE GIRDERS FOR FULL DEAD LOAD FIT SUCH THAT THE WEBS OF THE GIRDERS ARE VERTICAL AFTER THE FULL NON-COMPOSITE DEAD LOAD OF THE STEEL AND SUPERIMPOSED DEAD LOAD IS APPLIED.
3. UNDER FULL DEAD LOAD, BEAM ENDS AND BEARING STIFFENERS ARE VERTICAL TO WITHIN APPLICABLE A.R.E.M.A. FABRICATION AND CONSTRUCTION TOLERANCES.
4. PROVIDE INTERMEDIATE STIFFENER AS SHOWN ON EXTERIOR SIDE ONLY. SEE FRAMING PLAN FOR ADDITIONAL INFORMATION.
5. ½"x3" PLATE FOR CURB PLATE CONNECTION (TYP.). SEE CURB PLATE DETAILS FOR ADDITIONAL INFORMATION.
6. INTERMEDIATE STIFFENER TO WEB WELD TO TERMINATE A MINIMUM DISTANCE OF 6 TIMES THE THICKNESS OF THE WEB STARTING FROM THE TOE OF THE TENSION FLANGE.
7. FOR CURB PLATE DETAILS, SEE SHEET 32.
8. FOR DETAILS 4, 5, AND 6, SEE SHEET 29.
9. FOR STRUCTURAL STEEL NOTES, SEE SHEET 4.

LEGEND:

FCM - FRACTURE CRITICAL MEMBER

Mark	Description	By	Chk'd.	Recm'd.	Date
REVISIONS					

S.R. 0051 PREVIOUSLY KNOWN AS L.R. 288

CERTIFIED CORRECT PLANS
Professional Engineer
Approved by Bureau of Technical Utility Services
PA PUBLIC UTILITY COMMISSION
ATTEST Secretary

COMMONWEALTH OF PENNSYLVANIA
DEPARTMENT OF TRANSPORTATION

WESTMORELAND COUNTY
S.R. 0070 SECTION E10
SEGMENT 40/41 OFFSET 1725/1692 (NB/SB)
WHEELING & LAKE ERIE RAILROAD (MP C-17.01)
OVER S.R. 0051 STATION 782+91.42
SINGLE SPAN THROUGH GIRDER BRIDGE
GIRDER ELEVATION

COMMONWEALTH OF PENNSYLVANIA
REGISTERED PROFESSIONAL
CHRISTOPHER T. VOLLMER
ENGINEER NO PE-0683

RECOMMENDED February 3rd, 2022

SHEET 28 OF 44

DES: CJP | DWN: CJP | CHK: CTV

pw:\\gfnet-pw.bentley.com:gfnet-pw-01\Documents\Projects\61636\INPUT\COMP_01\CIVIL\BRDGS\W&LE RR BRIDGE\SHT26_GIRDER ELEVATION.dgn
1/4/2022 2:54:23 PM

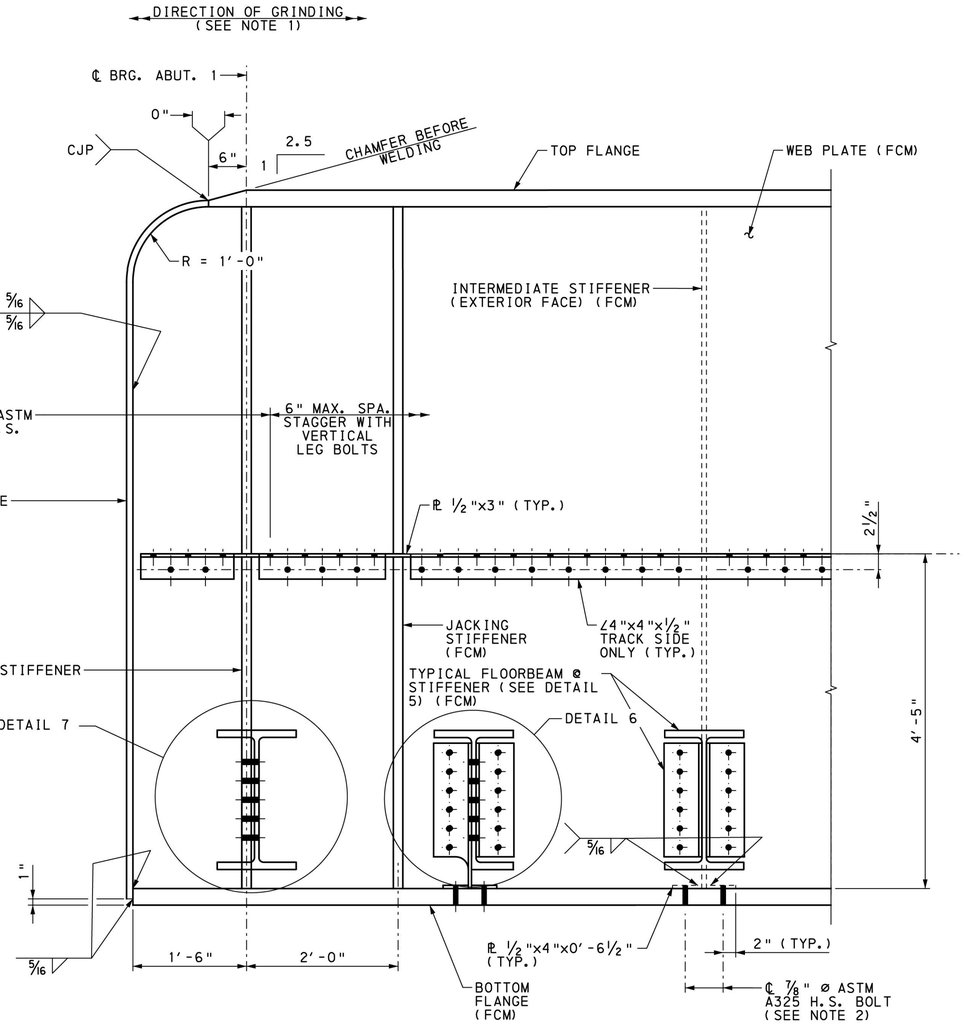

DETAIL 4

GIRDER G1 SHOWN AT ABUTMENT 1
GIRDER G2 SIMILAR AT BOTH ABUTMENTS

6" 0 6" 12"

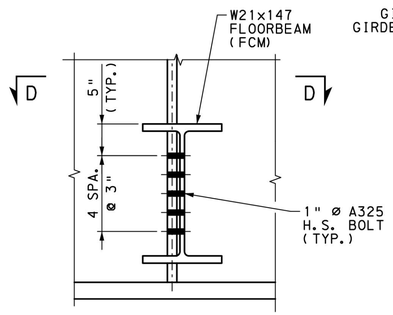

DETAIL 7

6" 0 6" 12"

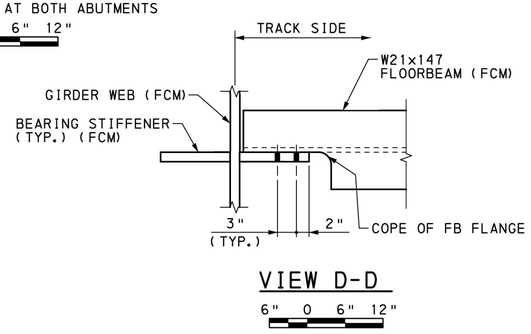

VIEW D-D

6" 0 6" 12"

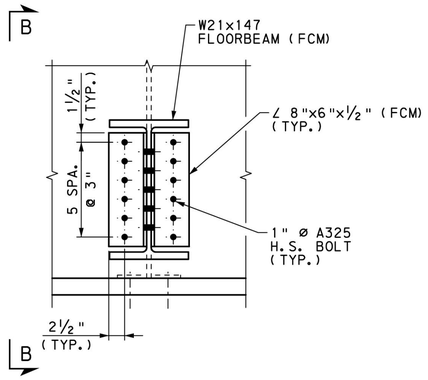

DETAIL 5

TYPICAL FLOORBEAM CONNECTION WITH INTERMEDIATE STIFFENER

6" 0 6" 12"

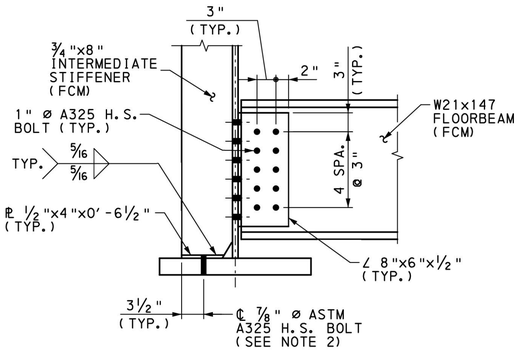

SECTION B-B

6" 0 6" 12"

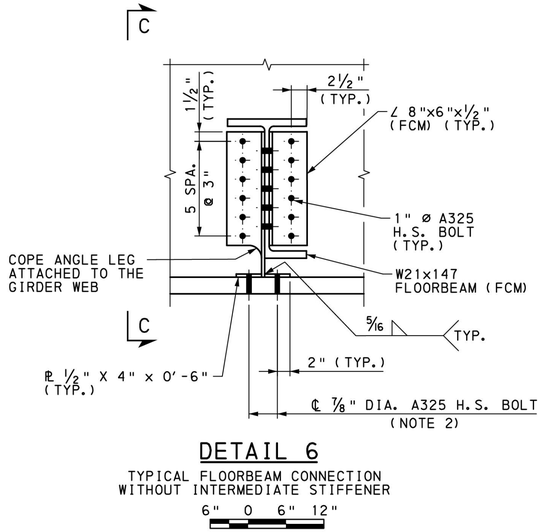

DETAIL 6

TYPICAL FLOORBEAM CONNECTION WITHOUT INTERMEDIATE STIFFENER

6" 0 6" 12"

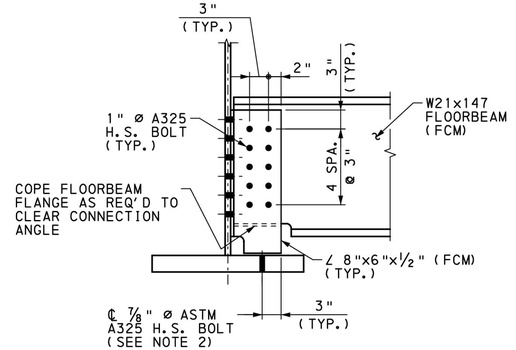

SECTION C-C

6" 0 6" 12"

Mark	Description	By	Chk'd.	Recm'd.	Date
REVISIONS					

S.R. 0051 PREVIOUSLY KNOWN AS L.R. 288

NOTES:

1. GRIND FLUSH ALL TESTED AREAS. GRIND SMOOTH ALL OTHER AREAS THAT EXCEED 1/8" REINFORCEMENT AND WHERE REQUIRED. GRIND TO PRODUCE A GRADUAL TRANSITION TO THE PLAN OF THE BASE METAL ALONG WITH REMOVING ANY DISCONTINUITIES. DIRECTION OF GRINDING SHALL BE PARALLEL TO DIRECTION OF PRIMARY STRESS.
2. TIGHTEN BOLTS PRIOR TO WELDING TO THE CONNECTION ANGLES AND INTERMEDIATE STIFFENERS.
3. FOR ADDITIONAL STIFFENER DETAILS, SEE SHEET 28.

LEGEND:

FCM - FRACTURE CRITICAL MEMBER

CERTIFIED CORRECT PLANS
David R. Hollinshead
Professional Engineer
Approved by Bureau of Technical Utility Services
PA PUBLIC UTILITY COMMISSION
ATTEST
Secretary

COMMONWEALTH OF PENNSYLVANIA
REGISTERED PROFESSIONAL
CHRISTOPHER T. VOLLMER
ENGINEER NO PE-068813
COMMONWEALTH OF PENNSYLVANIA

COMMONWEALTH OF PENNSYLVANIA
DEPARTMENT OF TRANSPORTATION

WESTMORELAND COUNTY
S.R. 0070 SECTION E10
SEGMENT 40/41 OFFSET 1725/1692 (NB/SB)
WHEELING & LAKE ERIE RAILROAD (MP C-17.01)
OVER S.R. 0051 STATION 782+91.42
SINGLE SPAN THROUGH GIRDER BRIDGE
GIRDER DETAILS 1

RECOMMENDED February 3rd, 2022

SHEET 29 OF 44

DES: CJP | DWN: CJP | CHK: CTV

pw:\\gfnet-pw.bentley.com:gfnet-pw-01\Documents\Projects\61636\INPUT\COMP_01\CIVIL\BRDG\W&LE RR BRIDGE\SHT27_GIRDER DETAILS 1.dgn
1/4/2022 2:54:26 PM

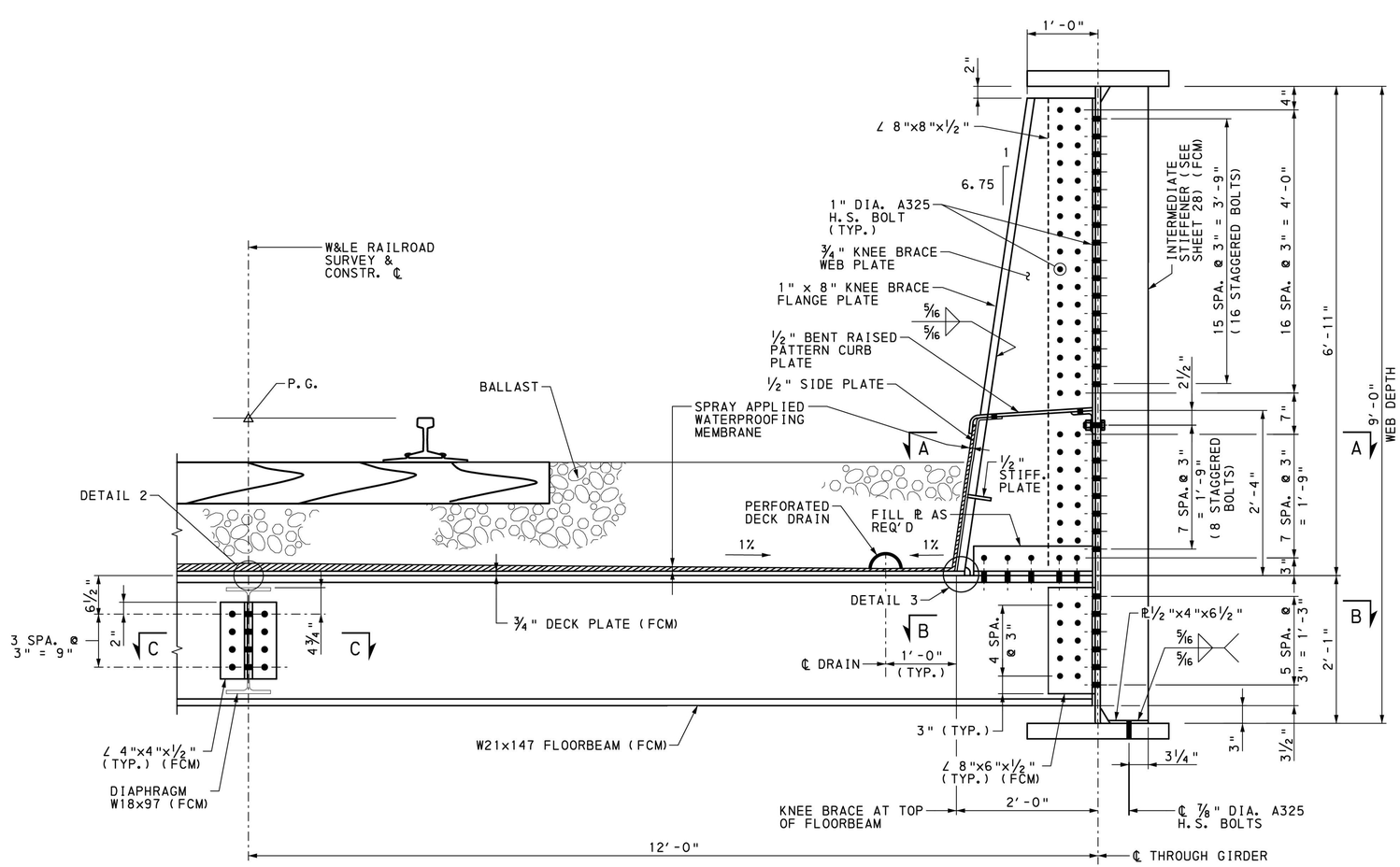

DETAIL 1

6" 0 6" 12"

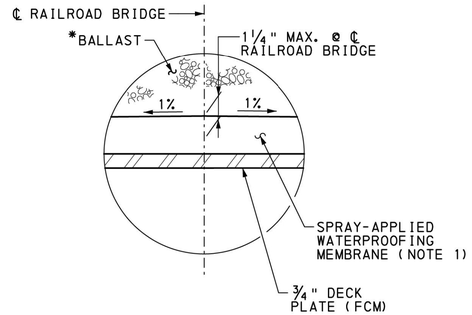

DETAIL 2

3" 0 3"

* VERTICAL BRIDGE GEOMETRY FALLS WITHIN 0.90 % TANGENT GRADE, THEREFORE BALLAST DEPTH WITH BE CONSTANT.

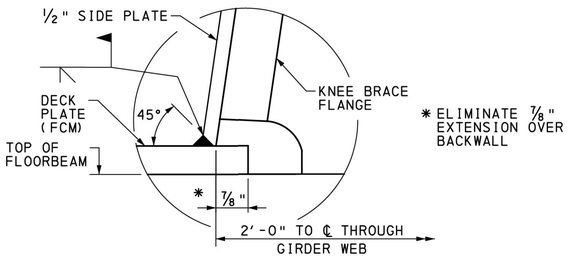

DETAIL 3

N.T.S.

NOTES:

1. PLACE WATERPROOFING MEMBRANE TO PROVIDE A 1.0% TRANSVERSE SLOPE FROM THE BRIDGE CENTERLINE TO THE DECK DRAIN LOCATION.

LEGEND:

FCM - FRACTURE CRITICAL MEMBER

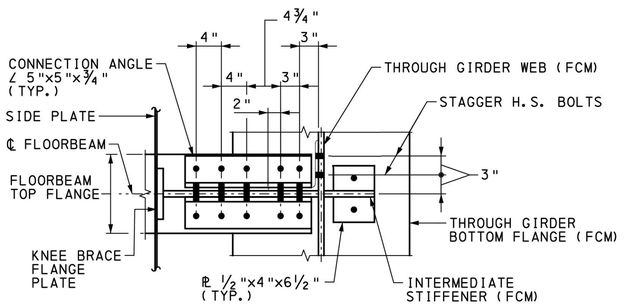

SECTION A-A

TYPICAL AT KNEE BRACE LOCATIONS

6" 0 6" 12"

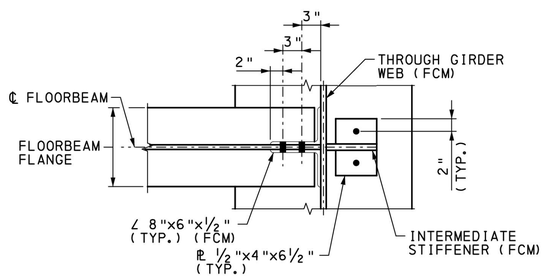

SECTION B-B

FLOORBEAM-TO-GIRDER CONNECTION AT KNEEBRACE

6" 0 6" 12"

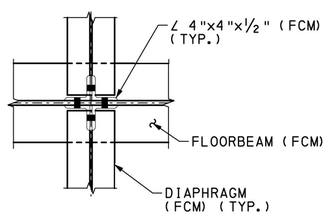

SECTION C-C

6" 0 6" 12"

CERTIFIED CORRECT PLANS
Professional Engineer
Approved by Bureau of Technical Utility Services
PA PUBLIC UTILITY COMMISSION
ATTEST Secretary

COMMONWEALTH OF PENNSYLVANIA REGISTERED PROFESSIONAL CHRISTOPHER T. VOLLMER ENGINEER NO PE-0683 PENNSYLVANIA

Mark	Description	By	Chk'd.	Recm'd.	Date
REVISIONS					

S.R. 0051 PREVIOUSLY KNOWN AS L.R. 288

COMMONWEALTH OF PENNSYLVANIA
DEPARTMENT OF TRANSPORTATION

WESTMORELAND COUNTY
S.R. 0070 SECTION E10

SEGMENT 40/41 OFFSET 1725/1692 (NB/SB)
WHEELING & LAKE ERIE RAILROAD (MP C-17.01)
OVER S.R. 0051 STATION 782+91.42

SINGLE SPAN THROUGH GIRDER BRIDGE
GIRDER DETAILS 2

RECOMMENDED February 3rd, 2022

SHEET 30 OF 44

DES: CJP | DWN: CJP | CHK: CTV

pw:\\gfnet-pw.Bentley.com:gfnet-pw-01\Documents\Projects\61636\INPUT\COMP_01\CIVIL\BRDG\W&LE RR BRIDGE\SHT28_GIRDER DETAILS 2.dgn
1/4/2022 2:54:28 PM

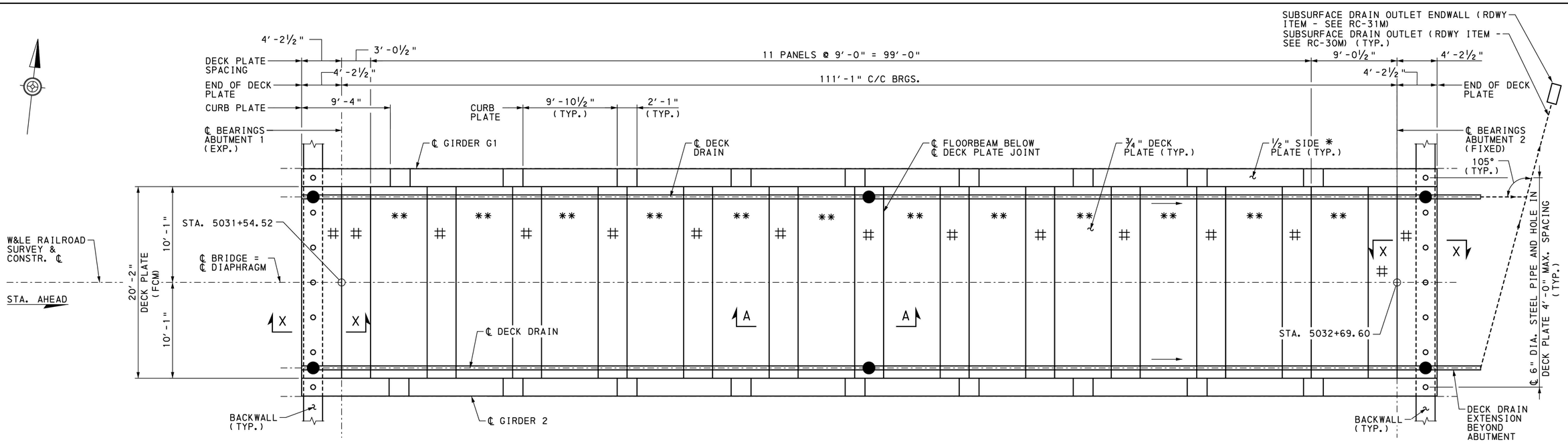

DECK PLATE PLAN

2′ 0 2′ 4′ 6′

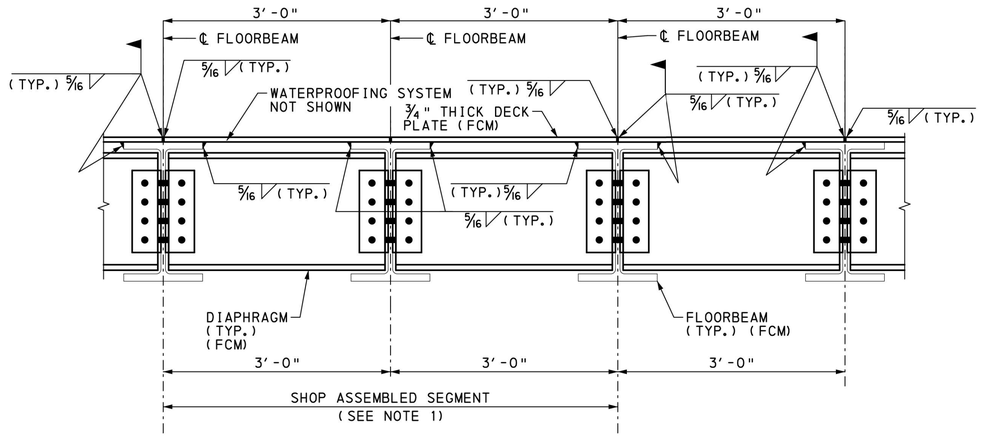

SECTION A-A

6" 0 6" 12"

CONCEPTUAL DECK SYSTEM ASSEMBLY NOTES:

1. SHOP ASSEMBLY OF DECK SYSTEM INCLUDES 3 ADJACENT FLOORBEAMS, 2 DIAPHRAGMS BETWEEN FLOORBEAMS AND 1 WELDED DECK PLATE.
2. FIELD ASSEMBLY OF DECK SYSTEM INCLUDES WELDED DECK TO FLOORBEAM CONNECTIONS AND CENTER DIAPHRAGM CONNECTION BETWEEN SHOP SEGMENTS.
3. THE INDICATED DETAILS AND NOTES ARE CONCEPTUAL AND THE CONTRACTOR IS REQUIRED TO PROVIDE ERECTION PLAN INCLUDING ALL CALCULATIONS AND DETAILS PREPARED AND SEALED BY A PROFESSIONAL ENGINEER REGISTERED IN THE COMMONWEALTH OF PENNSYLVANIA FOR DEPARTMENT AND WHEELING AND LAKE ERIE APPROVAL PRIOR TO DEVELOPMENT OF SHOP DRAWINGS.
4. CONTRACTOR CAN PROPOSE ALTERNATE SHOP/FIELD ASSEMBLY SEQUENCE AND SEGMENTS, BUT MUST PROVIDE DETAILS IN THE CONTRACTORS ERECTION PLAN.

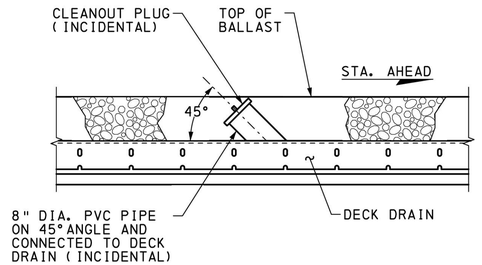

DECK DRAIN CLEANOUT DETAIL

(6 REQUIRED)
NOT TO SCALE

LEGEND:

- * - SLOPE OF SIDE PLATE NOT SHOWN FOR CLARITY
- → - DIRECTION OF FLOW
- # - FIELD DROP IN DECK PLATE
- ** - SHOP ASSEMBLED FLOORBEAM UNIT
- FCM - FRACTURE CRITICAL MEMBER
- ● - DECK DRAIN CLEANOUT, SEE DETAIL THIS SHEET

NOTES:

1. FOR FRAMING PLAN, SEE SHEET 27.
2. FOR SECTION X-X, SEE SHEET 33.

Mark	Description	By	Chk'd.	Recm'd.	Date
REVISIONS					

S.R. 0051 PREVIOUSLY KNOWN AS L.R. 288

CERTIFIED CORRECT PLANS
Professional Engineer
Approved by Bureau of Technical Utility Services
PA PUBLIC UTILITY COMMISSION
ATTEST Secretary

COMMONWEALTH OF PENNSYLVANIA REGISTERED PROFESSIONAL CHRISTOPHER T. VOLLMER ENGINEER NO PE-0683

COMMONWEALTH OF PENNSYLVANIA
DEPARTMENT OF TRANSPORTATION

WESTMORELAND COUNTY
S.R. 0070 SECTION E10

SEGMENT 40/41 OFFSET 1725/1692 (NB/SB)
WHEELING & LAKE ERIE RAILROAD (MP C-17.01)
OVER S.R. 0051 STATION 782+91.42

SINGLE SPAN THROUGH GIRDER BRIDGE
DECK PLATE PLAN

RECOMMENDED February 3rd, 2022

SHEET 31 OF 44

DES: CJP | DWN: CJP | CHK: CTV

pw:\\gfnet-pw.bentley.com:gfnet-pw-01\Documents\Projects\61636\INPUT\COMP_01\CIVIL\BRDG\W&LE RR BRIDGE\SHT29_DECK PLATE PLAN.dgn
1/4/2022 2:54:30 PM

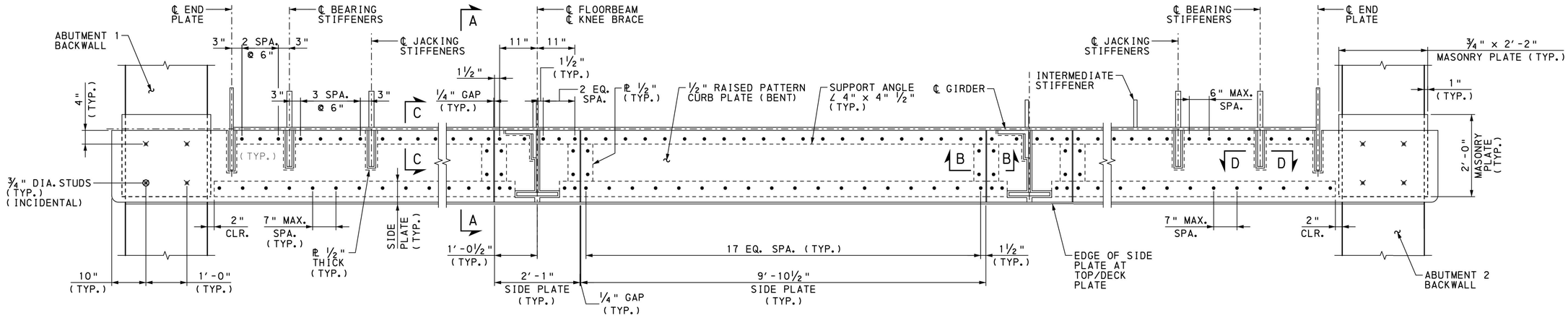

PLAN - CURB PLATE AND SIDE PLATE

12" 0 6" 12"

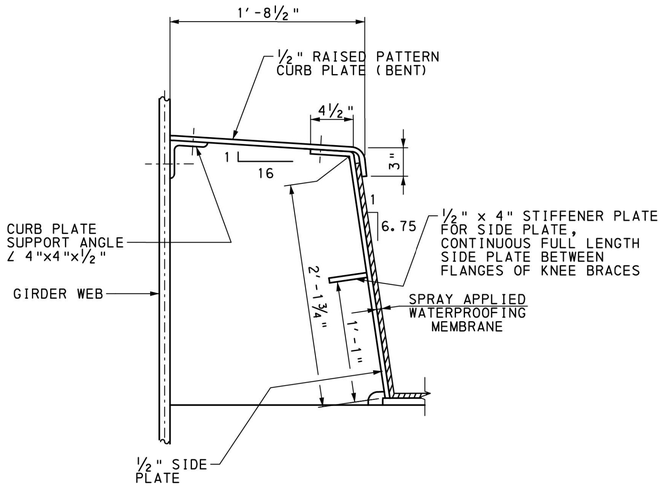

SECTION A-A

6" 0 6"

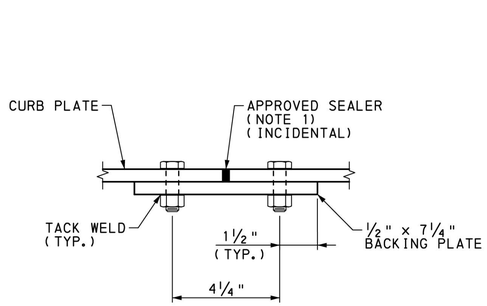

SECTION B-B

NOT TO SCALE

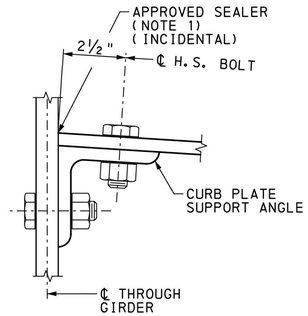

SECTION C-C

NOT TO SCALE

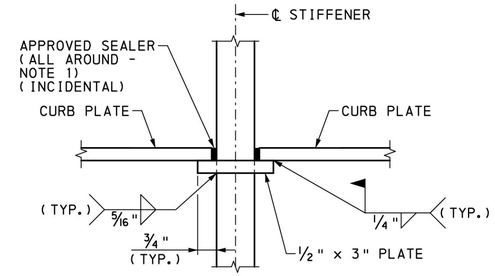

SECTION D-D

NOT TO SCALE

NOTES:

1. FIELD WELDING NOT PERMITTED.

Mark	Description	By	Chk'd.	Recm'd.	Date
REVISIONS					

S.R. 0051 PREVIOUSLY KNOWN AS L.R. 288

CERTIFIED CORRECT PLANS
Darrell R. Hillbish
Professional Engineer
Approved by Bureau of Technical Utility Services
PA PUBLIC UTILITY COMMISSION
ATTEST Rosemary Chiavetta
Secretary

COMMONWEALTH OF PENNSYLVANIA
REGISTERED PROFESSIONAL
CHRISTOPHER T. VOLLMER
ENGINEER NO PE-068383
COMMONWEALTH OF PENNSYLVANIA

COMMONWEALTH OF PENNSYLVANIA
DEPARTMENT OF TRANSPORTATION

WESTMORELAND COUNTY
S.R. 0070 SECTION E10

SEGMENT 40/41 OFFSET 1725/1692 (NB/SB)
WHEELING & LAKE ERIE RAILROAD (MP C-17.01)
OVER S.R. 0051 STATION 782+91.42
SINGLE SPAN THROUGH GIRDER BRIDGE
DECK DETAILS 1

RECOMMENDED February 3rd, 2022

SHEET 32 OF 44

DES: CJP | DWN: CJP | CHK: CTV

pw:\\gfnet-pw.bentley.com:gfnet-pw-01\Documents\Projects\61636\INPUT\COMP_01\CIVIL\BRDG\W&LE RR BRIDGE\SHT30_DECK DETAILS 1.dgn
1/14/2022 2:54:32 PM

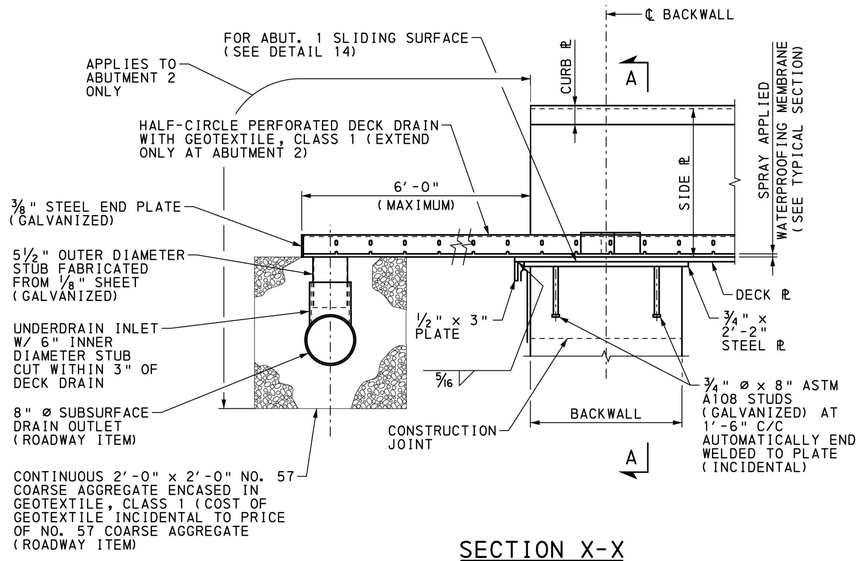

SECTION X-X

6" 0 6" 12"

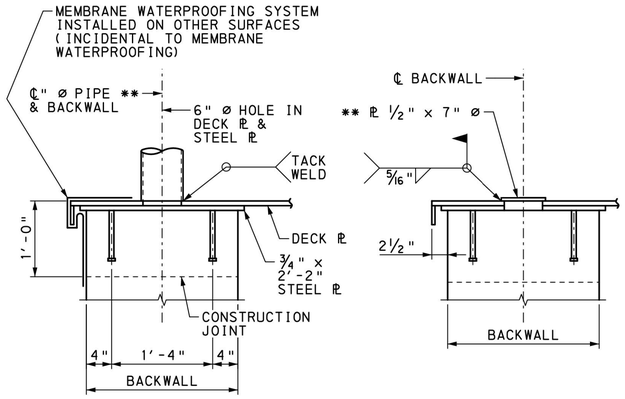

TYPICAL DETAILS AT ABUTMENT BACKWALL

6" 0 6" 12"

NOTE: SPRAY APPLIED MEMBRANE WATER PROOFING IS TO BE APPLIED AFTER THE 6" DIA. PIPE IS CUT FLUSH, SEALED AND WELDED.

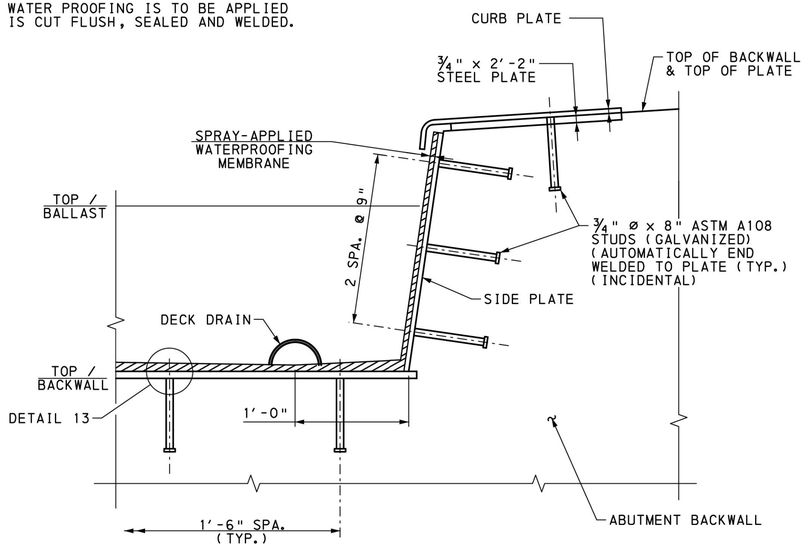

SECTION A-A

WATERPROOFING AT ABUTMENT BACKWALL

6" 0 6"

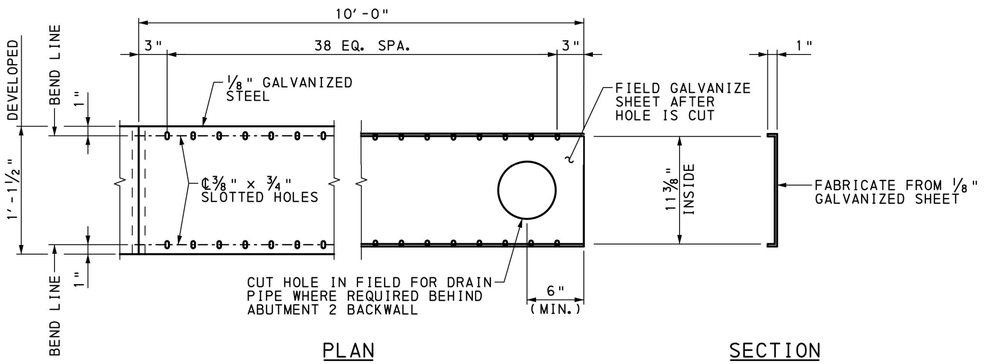

PLAN SECTION

STEEL PAN PLAN

(SINGLE SEGMENT SHOWN)

6" 0 6"

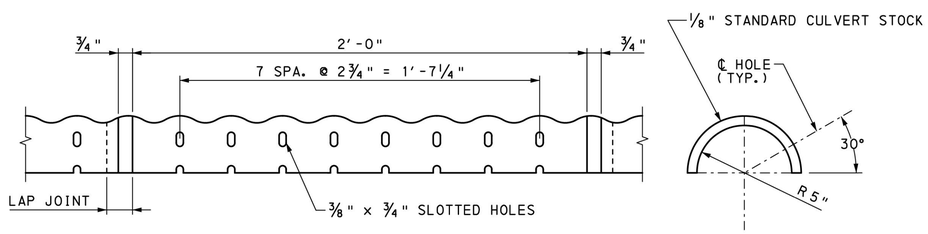

COVER ELEVATION COVER SECTION

DECK DRAIN DETAILS

(SINGLE SEGMENT SHOWN)

3" 0 3"

NOTE: PROVIDE EXPANSION JOINTS IN THE DECK DRAINS TO ACCOMMODATE 4" OF TOTAL MOVEMENT

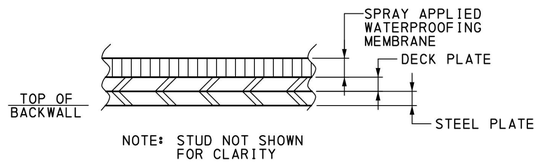

NOTE: STUD NOT SHOWN FOR CLARITY

DETAIL 13

3" 0 3"

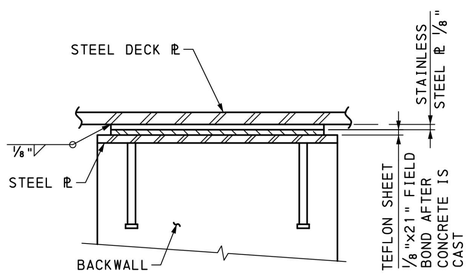

DETAIL 14

NOT TO SCALE

ABUTMENT 1 ONLY

CERTIFIED CORRECT PLANS

Donald R Hilbish

Professional Engineer

Approved by Bureau of Technical Utility Services

PA PUBLIC UTILITY COMMISSION

ATTEST Secretary

COMMONWEALTH OF PENNSYLVANIA REGISTERED PROFESSIONAL CHRISTOPHER T. VOLLMER ENGINEER NO PE-0683

LEGEND:

* PORTIONS OF BACKWALL ABOVE CONSTRUCTION JOINT POURED AFTER DECK PLATE, SIDE PLATES AND CURB PLATES HAVE BEEN INSTALLED ON SUPERSTRUCTURE.

** AFTER THE BACKWALL HAS BEEN PLACED, REMOVE 6" ø PIPE FLUSH WITH THE TOP OF THE DECK PLATE AND COVER HOLE WITH ½" x 7" ø PLATE WELDED TO DECK PLATE.

NOTES:

1. TEFLON SHEET & STAINLESS STEEL ℙ ARE INCIDENTAL TO FABRICATED STRUCTURAL STEEL AND ARE TO BE LOCATED OVER THE FULL LENGTH OF ABUTMENT 1 BACKWALL.
2. FOR ADDITIONAL ABUTMENT BACKWALL DETAILS, SEE SHEETS 9 - 11 & 17 - 19.
3. FOR DECK DRAIN CLEANOUT DETAIL, SEE SHEET 31.

Mark	Description	By	Chk'd.	Recm'd.	Date
REVISIONS					

S.R. 0051 PREVIOUSLY KNOWN AS L.R. 288

COMMONWEALTH OF PENNSYLVANIA

DEPARTMENT OF TRANSPORTATION

WESTMORELAND COUNTY

S.R. 0070 SECTION E10

SEGMENT 40/41 OFFSET 1725/1692 (NB/SB)

WHEELING & LAKE ERIE RAILROAD (MP C-17.01)

OVER S.R. 0051 STATION 782+91.42

SINGLE SPAN THROUGH GIRDER BRIDGE

DECK DETAILS 2

RECOMMENDED February 3rd, 2022

SHEET 33 OF 44

DES: CJP | DWN: CJP | CHK: CTV

pw:\\gfnet-pw.bentley.com:gfnet-pw-01\Documents\Projects\61636\INPUT\COMP_01\CIVIL\BRDG\W&LE RR BRIDGE\SHT31_DECK DETAILS 2.dgn
1/4/2022 2:54:34 PM

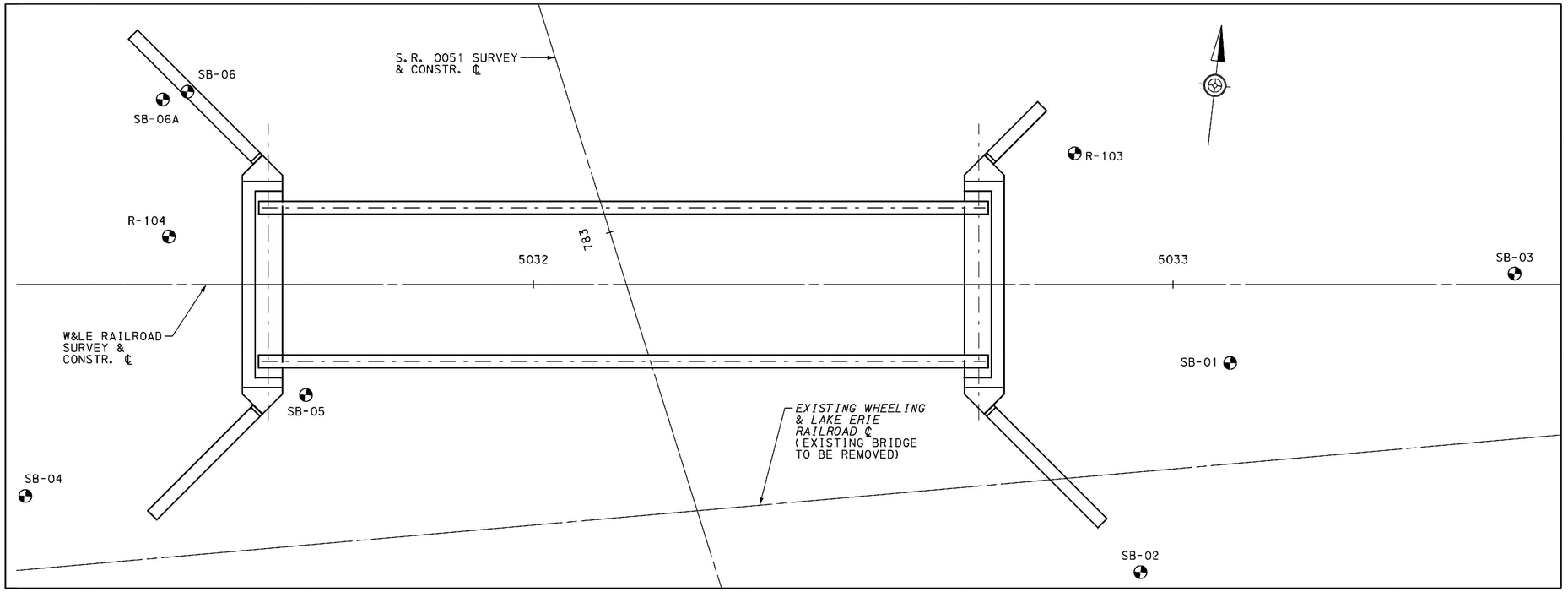

GENERAL NOTES:

THIS SHEET IS INCLUDED FOR THE CONVENIENCE OF THE DEPARTMENT. REFER TO PUBLICATION 408 SECTION 102.05 FOR FURTHER INFORMATION.

FOR ADDITIONAL SOIL AND ROCK DESCRIPTIONS SEE PUBLICATION 222.

THE BORING LOGS AND RELATED INFORMATION DEPICT SUBSURFACE CONDITIONS ONLY AT THE SPECIFIC LOCATIONS AND DATES INDICATED. SUBSURFACE CONDITIONS MAY DIFFER FROM THE CONDITIONS REPORTED AT THE SPECIFIC LOCATIONS. ALSO, THE PASSAGE OF TIME MAY RESULT IN A CHANGE OF CONDITIONS AT THE BORING LOCATIONS.

LEGEND:

⊕ - STRUCTURE BORINGS

STRUCTURE BORING LOCATION PLAN

5′ 0 5′ 10′

THE INFORMATION, AS SUBMITTED, ACCURATELY REPRESENTS THE CONDITIONS ENCOUNTERED BY THE TEST BORING PROGRAM, INCLUDING BORING LOGS, EARTH SAMPLES, ROCK CORES, CLASSIFICATION OF MATERIALS, & DEPTH OF BORINGS.

Matthew B. Morris 1-4-22

GEOTECHNICAL ENGINEER DATE

THE INFORMATION PROVIDED IS REPRESENTATIVE OF SUBSURFACE CONDITIONS ONLY AT THE LOCATIONS AND DEPTHS WHERE SUCH INFORMATION WAS OBTAINED, AND THERE IS NO EXPRESSED OR IMPLIED AGREEMENT THAT UNIFORMITY OF MATERIALS EXISTS BETWEEN EXPLORED LOCATIONS.
(SEE PUBLICATION 408/2020, SECTION 102.05.)

Mark	Description	By	Chk'd.	Recm'd.	Date
REVISIONS					

S.R. 0051 PREVIOUSLY KNOWN AS L.R. 288

CERTIFIED CORRECT PLANS
David R. Rilleau
Professional Engineer
Approved by Bureau of Technical Utility Services
PA PUBLIC UTILITY COMMISSION
ATTEST Secretary

COMMONWEALTH OF PENNSYLVANIA
REGISTERED PROFESSIONAL
MATTHEW BROOKS MORRIS
GEOLOGIST
PG004584
PENNSYLVANIA

COMMONWEALTH OF PENNSYLVANIA
DEPARTMENT OF TRANSPORTATION

WESTMORELAND COUNTY
S.R. 0070 SECTION E10
SEGMENT 40/41 OFFSET 1725 /1692 (NB/SB)
WHEELING & LAKE ERIE RAILROAD (MP C-17.01)
OVER S.R. 0051 STATION 82+91.42
SINGLE SPAN THROUGH GIRDER BRIDGE
STRUCTURE BORING LOCATION PLAN

RECOMMENDED
Roy A. Pointa 1/18/2022
DISTRICT GEOTECHNICAL ENGINEER

SHEET 34 OF 44

DES: AGR | DWN: CJP | CHK: MBM

pw:\\gfnet-pw.bentley.com:gfnet-pw-01\Documents\Projects\61636\INPUT\COMP_01\CIVIL\BRDG\W&LE RR BRIDGE\SHT32-CORE BORING LOCATION PLAN.dgn
1/4/2022 2:54:56 PM

SUBSTRUCTURE UNIT:
ABUTMENT 2

LOG 1 OF 2

BORING NUMBER:	BORING LOCATION	START: 08/06/2020 9:30 AM	HAMMER: AUTOMATIC
SB-1	STATION: 782+51.5 OFFSET: 86.4 FT. RT.	FINISH: 08/07/2020 10:00 AM	EFFICIENCY: 0.8 ERa

DRILLING METHOD AND EQUIPMENT:	SIZE OF CORE:	VERTICAL SCALE:	TOP OF BORING ELEVATION:
DOUBLE TUBE WIRE LINE-NQ, AUTOMATIC, CME 750	1.874 IN.	0 FT. [redacted] 5 FT.	993.0 FT.

DRILLING INSPECTOR: STEPHANIE CHECHAK
DRILLER & DRILLING COMPANY: DOUG SHOPE 7NT

▽ 0 HR. READING - ELAPSED TIME: El. 972.0 ft. - 0.5 hr.
▼ 24 HR. READING - ELAPSED TIME: El. 969.4 ft. - 70.0 hr.

ELEV.	GRAPHIC	MATERIAL DESCRIPTION	AASHTO/ USCS	SAMPLE DEPTH	SAMPLE NO.	BLOW COUNT / PP/T TSF	N 60 / %RQD	REC (ft.)	REC (%)	◇ RQD % ◇ ⊙ Soil/Rock Rec. % ⊙ ▲ SPT (N_{60}) ▲
990		**SAND** and **CLAY**, little Gravel, very loose to loose, dry to damp, heterogeneous, brown and gray, fill, *Sand is fine to coarse, gravel is angular, plasticity is -PL, colors also include black, trace coal and carbonaceous shale fragments throughout.*	a-2-6 / sc	1.5	S-1	1-2-3	7	1.5	100	
				3.0	S-2	2-3-3	8	1.2	80	
				4.5	S-3	3-2-2	5	1.5	100	
				6.0	S-4	2-3-2	7	1.5	100	
				7.5	S-5	2-4-4	11	1.5	100	
985				9.0	S-6	2-2-2	5	1.1	73	
				10.5	S-7	2-3-2	7	1.0	67	
				12.0	S-8	**1.25** 2-3-4	9	1.3	87	
		CLAY, little Sand, trace Gravel, soft to stiff, damp, heterogeneous, brown and tan, fill, *Sand is fine, plasticity is -PL to PL.*	a-6 / cl	13.5	S-9	**2.00** 2-3-4	9	1.5	100	
				15.0	S-10	**0.75** 2-2-4	8	1.3	87	
				16.5	S-11	**1.50** 3-4-4	11	1.5	100	
				18.0	S-12	**2.50** 3-5-6	15	1.5	100	
980		18.0'/El. 975.0		19.5	S-13	**4.50** 4-4-7	15	1.5	100	
				21.0	S-14	**3.50** 3-5-5	13	1.5	100	
				22.5	S-15	**4.00** 3-4-6	13	1.5	100	
				24.0	S-16	**2.00** 3-4-5	12	1.5	100	
		CLAY, little Silt, trace Sand, stiff, damp, homogeneous, brown, alluvium, *Plasticity is -PL to PL, colors also include mottled dark gray and orange, clay is mottled throughout.*	a-6 / cl	25.5	S-17	**3.00** 3-3-6	12	1.5	100	
				27.0	S-18	**2.25** 3-5-5	13	1.5	100	
975				28.5	S-19	**4.50** 4-4-5	12	1.5	100	
				30.0	S-20	**3.25** 2-3-4	9	1.5	100	
				31.5	S-21	**2.00** 3-3-3	8	1.5	100	
				33.0	S-22	**1.50** 4-3-3	8	1.5	100	
				34.5	S-23	**1.00** 3-2-4	8	1.5	100	
		28.5'/El. 964.5		36.0	S-24	**1.25** 2-2-2	5	1.5	100	
		CLAY, some Silt, trace Sand, soft to stiff, damp to moist, homogeneous, dark gray, alluvium, *Plasticity is PL to +PL, silt content fluctuates throughout.*	a-6 / cl	37.5	S-25	**0.75** 2-3-2	7	1.5	100	
				39.0	S-26	**1.00** 3-3-2	7	1.5	100	
				40.5	S-27	**1.00** 3-3-3	8	1.5	100	
				42.0	S-28	**1.25** 2-2-4	8	1.5	100	
				43.5	S-29	**0.75** 2-3-3	8	1.5	100	
				45.0	S-30	**1.25** 1-2-2	5	1.5	100	
				46.5	S-31	**1.00** 2-2-3	7	1.5	100	
				48.0	S-32	**1.00** WOH-3-4	9	0.7	47	
				49.5	S-33	**1.50** 3-4-6	13	1.5	100	
				51.0	S-34	**1.50** 3-5-6	15	1.5	100	
		34.5'/El. 958.5		52.5	S-35	**3.00** 3-3-3	8	1.5	100	
		CLAY, some Silt, trace Sand, soft to stiff, damp to moist, homogeneous, dark gray, alluvium, *Plasticity is PL to +PL, silt content fluctuates throughout.*	a-7-6 / cl	54.0	S-36	1-2-4	8	1.5	100	
				55.5	S-37	**1.00** 1-2-2	5	1.5	100	
				57.0	S-38	WOH-WOH-1	1	1.5	100	
				58.5	S-39	**0.50** WOH-1-2	4	1.5	100	
				60.0	S-40	**0.50** 2-2-3	7	1.5	100	
				61.5	S-41	**0.50** WOH-2-2	5	1.5	100	
				63.0	S-42	**0.50** 2-3-2	7	1.5	100	
		51.0'/El. 942.0								
		SILT and **CLAY**, some Sand, soft to medium, moist to wet, homogeneous, dark gray, alluvium, *Plasticity is -PL to PL, sand is fine, PP readings not available for S-35 and S-36 due to sand content.*	a-4 / ml							
		55.5'/El. 937.5								
		CLAY, some Silt, very soft to medium, moist to wet, homogeneous, dark gray, alluvium, *Plasticity is PL to +PL, silt content fluctuates throughout.*	a-6 / cl							

EPTE 921.80

BPCE 967.88

SUBSTRUCTURE UNIT:
ABUTMENT 2

LOG 2 OF 2

BORING NUMBER:	BORING LOCATION	VERTICAL SCALE:	
SB-1	STATION: 782+51.5 OFFSET: 86.4 FT. RT.	0 FT. [redacted] 5 FT.	▽ 0 HR.: El. 972.0 ft. - 0.5 hr. ▼ 24 HR.: El. 969.4 ft. - 70.0 hr.

ELEV.	GRAPHIC	MATERIAL DESCRIPTION	AASHTO/ USCS	SAMPLE DEPTH	SAMPLE NO.	BLOW COUNT / PP/T TSF	N 60 / %RQD	REC (ft.)	REC (%)	◇ RQD % ◇ ⊙ Soil/Rock Rec. % ⊙ ▲ SPT (N_{60}) ▲
925		64.5'/El. 928.5		64.5	S-43	**0.50**	7	1.5	100	
		SAND, some Silt, little Gravel, medium dense to very dense, damp to moist, mottled gray with red, residuum, *Sand is coarse, gravel is rounded.*	a-1-b / sm	66.0	S-44	2-3-2 **0.50**	19	1.5	100	
		69.2'/El. 923.8		67.5	S-45	4-5-9 1-2-30	43	1.5	100	
920		**SANDSTONE**, dark gray to mottled red, medium hard, weathered, *Colors also include mottled with brown, too little sample recovery to determine bedding or discontinuity spacing, Unit RQD = 0%.*		67.8	S-46	50/.3'	>67	0.3	100	
		70.7'/El. 922.3		68.0	A-1					
		LIMESTONE, light gray to blue gray, medium hard, slightly weathered, thin to moderate bedding with flat dip, fracture zone, close to medium spacing, *Bedding dip RD = 0, fracture spacing RD = 0 to 90, Unit RQD = 40%.*		69.2	S-47	50/.2'	>67	0.2	100	
		73.2' - 73.6' - Sudden tool drop, No recovery in this zone..		70.7	R-1		0%	0.4	27	
915		*77.9' - 78.9' - Sudden tool drop, very little material recovered in this zone..*		73.9	R-2		34%	2.1	66	
		81.4' - 81.5' - Very soft, weathered claystone interbeds. Likely the zones of lost recovery. Difficulties drilling in these zones with the barrel plugging up..		75.2	R-3		0%	1.0	77	
		81.7' - 82.0' - Very soft, weathered claystone interbeds. Likely the zones of lost recovery. Difficulties drilling in these zones with the barrel plugging up..		79.8	R-4		57%	3.9	85	
		83.0' - 83.1' - Very soft, weathered claystone interbeds. Likely the zones of lost recovery. Difficulties drilling in these zones with the barrel plugging up..			R-5		47%	4.2	86	
910		*83.4' - 83.5' - Very soft, weathered claystone interbeds. Likely the zones of lost recovery. Difficulties drilling in these zones with the barrel plugging up..*		84.7	R-6		30%	3.4	72	
		85.4' - 85.9' - Very soft, weathered claystone interbeds. Likely the zones of lost recovery. Difficulties drilling in these zones with the barrel plugging up..								
		89.4'/El. 903.6								
905		*89.1' - 89.4' - Very soft, weathered claystone interbeds. Likely the zones of lost recovery. Difficulties drilling in these zones with the barrel plugging up..*								

GENERAL NOTES:

THIS SHEET IS INCLUDED FOR THE CONVENIENCE OF THE DEPARTMENT. REFER TO PUBLICATION 408 SECTION 102.05 FOR FURTHER INFORMATION.

FOR ADDITIONAL SOIL AND ROCK DESCRIPTIONS SEE PUBLICATION 222.

THE BORING LOGS AND RELATED INFORMATION DEPICT SUBSURFACE CONDITIONS ONLY AT THE SPECIFIC LOCATIONS AND DATES INDICATED. SUBSURFACE CONDITIONS MAY DIFFER FROM THE CONDITIONS REPORTED AT THE SPECIFIC LOCATIONS. ALSO, THE PASSAGE OF TIME MAY RESULT IN A CHANGE OF CONDITIONS AT THE BORING LOCATIONS.

LEGEND:

PP - POCKET PENETROMETER
T - TORVANE
RQD - ROCK QUALITY DESIGNATION
SPT - STANDARD PENETRATION TEST
BPCE - BOTTOM OF PILE CAP ELEVATION
EPTE - ESTIMATED PILE TIP ELEVATION

▽ - DENOTES 0 HOUR GROUND WATER ELEVATION
▼ - DENOTES 24 HOUR GROUND WATER ELEVATION
( ) - REMARKS

THE CLASSIFICATIONS OF THE MATERIAL ENCOUNTERED HAVE BEEN VERIFIED.

MBM
INITIAL

THE INFORMATION, AS SUBMITTED, ACCURATELY REPRESENTS THE CONDITIONS ENCOUNTERED BY THE TEST BORING PROGRAM, INCLUDING BORING LOGS, EARTH SAMPLES, ROCK CORES, CLASSIFICATION OF MATERIALS, & DEPTH OF BORINGS.

Matthew B. Morris 1-4-22
GEOTECHNICAL ENGINEER DATE

THE INFORMATION PROVIDED IS REPRESENTATIVE OF SUBSURFACE CONDITIONS ONLY AT THE LOCATIONS AND DEPTHS WHERE SUCH INFORMATION WAS OBTAINED, AND THERE IS NO EXPRESSED OR IMPLIED AGREEMENT THAT UNIFORMITY OF MATERIALS EXISTS BETWEEN EXPLORED LOCATIONS.
(SEE PUBLICATION 408/2020, SECTION 102.05.)

Mark	Description	By	Chk'd.	Recm'd.	Date
REVISIONS					

S.R. 0051 PREVIOUSLY KNOWN AS L.R. 288

COMMONWEALTH OF PENNSYLVANIA
DEPARTMENT OF TRANSPORTATION

WESTMORELAND COUNTY
S.R. 0070 SECTION E10
SEGMENT 40/41 OFFSET 1725 /1692 (NB/SB)
WHEELING & LAKE ERIE RAILROAD (MP C-17.01)
OVER S.R. 0051 STATION 82+91.42
SINGLE SPAN THROUGH GIRDER BRIDGE
CORE BORING 1

CERTIFIED CORRECT PLANS
David R. Hilton
Professional Engineer
Approved by Bureau of Technical Utility Services
PA PUBLIC UTILITY COMMISSION
ATTEST Rosemary Chiavetta
Secretary

COMMONWEALTH OF PENNSYLVANIA
REGISTERED PROFESSIONAL
MATTHEW BROOKS MORRIS
GEOLOGIST
PG004584

RECOMMENDED Roy A. Painter 1/18/2022
DISTRICT GEOTECHNICAL ENGINEER

SHEET 35 OF 44

DES: AGR | DWN: CJP | CHK: MBM

pw:\\gfnet-pw.bentley.com:gfnet-pw-01\Documents\Projects\61636\INPUT\COMP_01\CIVIL\BRDG\W&LE RR BRIDGE\SHT33_CORE BORING 1.dgn
1/4/2022 2:54:59 PM

SUBSTRUCTURE UNIT: LOG 1 OF 2

ABUTMENT 2/WINGWALL D

BORING NUMBER:	BORING LOCATION	START: 08/06/2020 9:30 AM	HAMMER: AUTOMATIC
SB-2	STATION: 782+24.5 OFFSET: 63.2 FT. RT.	FINISH: 08/10/2020 4:30 PM	EFFICIENCY: 0.8 ERa

DRILLING METHOD AND EQUIPMENT:	SIZE OF CORE:	VERTICAL SCALE:	TOP OF BORING ELEVATION:
DOUBLE TUBE WIRE LINE-HQ, AUTOMATIC, CME 55 TRAILER	"NO RECORD"	0 FT. 5 FT.	992.4 FT.

DRILLING INSPECTOR: DAVID ROEBUCK
DRILLER & DRILLING COMPANY: FORREST SMITH 7NT

▽ 0 HR. READING - ELAPSED TIME: El. 979.7 ft. - 0.0 hr.
▼ 24 HR. READING - ELAPSED TIME: El. 969.5 ft. - 17.0 hr.

ELEV.	GRAPHIC	MATERIAL DESCRIPTION	AASHTO/ USCS	SAMPLE DEPTH	SAMPLE NO.**	BLOW COUNT / PP/T TSF	N 60 / %RQD	REC (ft.)	REC (%)	◇ RQD % ◇ ⊙ Soil/Rock Rec. % ⊙ ▲ SPT (N_{60}) ▲ 10 20 30 40
990		Fine **SAND**, very loose, fill. 0.5'/El. 991.9		1.5	S-1	WOH-1-2	4	0.8	53	
		SAND, some Silt, little Clay, medium to stiff, damp to moist, low plastic fines, light brown gray black, fill. 6.0'/El. 986.4	a-4 / ml	3.0	S-2	2-3-3	8	0.5	33	
				4.5	S-3	3-4-4	11	1.2	80	
985		**SAND**, some Silt, some Gravel, medium dense, moist, non-plastic, gray orange brown, fill. 9.0'/El. 983.4	a-2-4 / sm	6.0	S-4	5-5-6	15	1.3	87	
				7.5	S-5	5-5-6	15	1.2	80	
				9.0	S-6	6-12-5	23	1.0	67	
		CLAY, some Silt, some Sand, trace Gravel, soft to medium, moist, high plastic fines, brown mottled gray brown, fill. 16.5'/El. 975.9	A-6 / CL	10.5	S-7	4-3-2 **0.50**	7	1.2	80	
980				12.0	S-8	1-2-2 **0.50**	5	1.4	93	
				13.5	S-9	2-2-2 **0.50**	5	1.0	67	
				15.0	S-10	2-2-2 **0.50**	5	1.1	73	
				16.5	S-11	1-2-3 **0.75**	7	1.3	87	
975		**CLAY**, some Silt, little Sand, medium to stiff, moist, high plastic fines, brown mottled gray, alluvium. 30.0'/El. 962.4	a-6 / cl	18.0	S-12	2-4-5 **1.00**	12	1.4	93	
				19.5	S-13	2-2-4 **1.80**	8	1.5	100	
				21.0	S-14	3-4-4 **1.00**	11	1.5	100	
				22.5	S-15	1-4-5 **1.50**	12	1.5	100	
				24.0	S-16	4-7-8 **2.00**	20	1.5	100	
				25.5	S-17	4-6-7 **1.50**	17	1.5	100	
				27.0	S-18	2-3-5 **1.00**	11	1.5	100	
970				28.5	S-19	2-3-5 **1.00**	11	1.5	100	
				30.0	S-20	2-3-4 **0.75**	9	1.5	100	
		CLAY, some Silt, trace Sand, very soft to medium, moist, high plastic fines, gray, alluvium. 43.5'/El. 948.9	A-7-6 / CL	31.5	S-21	2-2-2 **0.50**	5	1.5	100	
				33.0	S-22	2-1-2 **0.50**	4	1.5	100	
				34.5	S-23	1-2-2 **0.50**	5	1.5	100	
				36.0	S-24	2-2-2 **0.50**	5	1.5	100	
965				37.5	S-25	1-1-2 **0.25**	4	1.5	100	
				39.0	S-26	WOH-2-2 **0.50**	5	1.5	100	
				40.5	S-27	1-2-3 **0.50**	7	1.5	100	
				42.0	S-28	4-3-5 **1.00**	11	1.5	100	
960				43.5	S-29	WOH-3-3 **0.75**	8	1.5	100	
		CLAY and **SILT**, some Sand, trace Gravel, medium to very stiff, moist, high plastic fines, gray, alluvium. 48.5'/El. 943.9	a-6 / cl	45.0	S-30	1-3-6 **1.00**	12	1.5	100	
				46.5	S-31	3-3-5 **1.00**	11	1.5	100	
				48.0	S-32	6-10-12 **2.50**	29	1.5	100	
955		Fine **SAND**, some Silt, little Clay, loose, moist, non-plastic, gray, alluvium. 52.5'/El. 939.9	a-4 / sm	49.5	S-33	8-4-5	12	1.5	100	
				51.0	S-34	3-5-5	13	1.5	100	
				52.5	S-35	3-3-5	11	1.5	100	
				54.0	S-36	3-3-5	11	1.5	100	
950				55.5	S-37	WOH-2-2 **0.50**	5	1.5	100	
				57.0	S-38	WOH-1-3 **0.25**	5	1.5	100	
				58.5	S-39	3-4-3 **1.00**	9	1.5	100	
				60.0	S-40	WOH-4-4	11	1.5	100	
945		**SILT**, some Clay, some Sand, very soft to medium, moist, high plastic fines, gray, alluvium. 63.5'/El. 928.9	a-4 / cl-ml	61.5	S-41	WOH-WOH-1 **0.25**	1	1.5	100	
				63.0	S-42	WOH-WOH-	0	1.5	100	
940										
935										
930										

BPCE 967.88

SUBSTRUCTURE UNIT: LOG 2 OF 2

ABUTMENT 2/WINGWALL D

BORING NUMBER:	BORING LOCATION	VERTICAL SCALE:
SB-2	STATION: 782+24.5 OFFSET: 63.2 FT. RT.	0 FT. 5 FT.

▽ 0 HR.: El. 979.7 ft. - 0.0 hr.
▼ 24 HR.: El. 969.5 ft. - 17.0 hr.

ELEV.	GRAPHIC	MATERIAL DESCRIPTION	AASHTO/ USCS	SAMPLE DEPTH	SAMPLE NO.**	BLOW COUNT / PP/T TSF	N 60 / %RQD	REC (ft.)	REC (%)	◇ RQD % ◇ ⊙ Soil/Rock Rec. % ⊙ ▲ SPT (N_{60}) ▲ 10 20 30 40
925		**GRAVEL** and **SAND**, some Clay, dense to very dense, moist, non-plastic, gray, residuum, *sand is fine to medium, gravel is sandstone fragments.(Layer continued from the previous log page)* 66.1'/El. 926.3	a-1-b / gc	64.5	S-43	WOH **0.25**	15	1.5	100	
				65.6	S-44	3-5-6 **1.50**	77	1.1	100	
				66.0	A-1 S-45	7-8-50/.1"	>67	0.0	0	
				66.1	R-1	50/.1"	0%	0.5	38	
				67.4	R-2		0%	0.0	0	
920		**SANDSTONE**, gray, hard, highly weathered, indistinct bedding, *slightly broken, Unit RQD = 0%.* 67.4'/El. 925.0		69.4	R-3		35%	1.5	75	
		LIMESTONE, gray, hard, highly weathered to fresh, moderate to medium bedding with flat dip, moderate spacing, steep to sheer dip, *Unit RQD = 47%.*		71.4	R-4		73%	3.0	100	
				74.4	R-5		44%	4.3	86	
915				79.4	R-6		58%	4.4	88	
		84.4'/El. 908.0								
910										

EPTE 923.00

**SAMPLE NO. shading indicates lab testing performed.

GENERAL NOTES:

THIS SHEET IS INCLUDED FOR THE CONVENIENCE OF THE DEPARTMENT. REFER TO PUBLICATION 408 SECTION 102.05 FOR FURTHER INFORMATION.

FOR ADDITIONAL SOIL AND ROCK DESCRIPTIONS SEE PUBLICATION 222.

THE BORING LOGS AND RELATED INFORMATION DEPICT SUBSURFACE CONDITIONS ONLY AT THE SPECIFIC LOCATIONS AND DATES INDICATED. SUBSURFACE CONDITIONS MAY DIFFER FROM THE CONDITIONS REPORTED AT THE SPECIFIC LOCATIONS. ALSO, THE PASSAGE OF TIME MAY RESULT IN A CHANGE OF CONDITIONS AT THE BORING LOCATIONS.

LEGEND:

PP - POCKET PENETROMETER
T - TORVANE
RQD - ROCK QUALITY DESIGNATION
SPT - STANDARD PENETRATION TEST
BPCE - BOTTOM OF PILE CAP ELEVATION
EPTE - ESTIMATED PILE TIP ELEVATION

▽ - DENOTES 0 HOUR GROUND WATER ELEVATION
▼ - DENOTES 24 HOUR GROUND WATER ELEVATION
( ) - REMARKS

THE CLASSIFICATIONS OF THE MATERIAL ENCOUNTERED HAVE BEEN VERIFIED.

MBM
INITIAL

THE INFORMATION, AS SUBMITTED, ACCURATELY REPRESENTS THE CONDITIONS ENCOUNTERED BY THE TEST BORING PROGRAM, INCLUDING BORING LOGS, EARTH SAMPLES, ROCK CORES, CLASSIFICATION OF MATERIALS, & DEPTH OF BORINGS.

Matthew B. Morris 1-4-22
GEOTECHNICAL ENGINEER DATE

THE INFORMATION PROVIDED IS REPRESENTATIVE OF SUBSURFACE CONDITIONS ONLY AT THE LOCATIONS AND DEPTHS WHERE SUCH INFORMATION WAS OBTAINED, AND THERE IS NO EXPRESSED OR IMPLIED AGREEMENT THAT UNIFORMITY OF MATERIALS EXISTS BETWEEN EXPLORED LOCATIONS.
(SEE PUBLICATION 408/2020, SECTION 102.05.)

Mark	Description	By	Chk'd.	Recm'd.	Date

REVISIONS

S.R. 0051 PREVIOUSLY KNOWN AS L.R. 288

COMMONWEALTH OF PENNSYLVANIA
DEPARTMENT OF TRANSPORTATION

WESTMORELAND COUNTY
S.R. 0070 SECTION E10
SEGMENT 40/41 OFFSET 1725 /1692 (NB/SB)
WHEELING & LAKE ERIE RAILROAD (MP C-17.01)
OVER S.R. 0051 STATION 82+91.42
SINGLE SPAN THROUGH GIRDER BRIDGE
CORE BORING 2

CERTIFIED CORRECT PLANS
Professional Engineer
Approved by Bureau of Technical Utility Services
PA PUBLIC UTILITY COMMISSION
ATTEST Secretary

COMMONWEALTH OF PENNSYLVANIA REGISTERED PROFESSIONAL MATTHEW BROOKS MORRIS GEOLOGIST PG004584

RECOMMENDED
Greg A. Fiunta 1/18/2022
DISTRICT GEOTECHNICAL ENGINEER

SHEET 36 OF 44

DES: AGR | DWN: CJP | CHK: MBM

pw:\\gfnet-pw.bentley.com:gfnet-pw-01\Documents\Projects\61636\INPUT\COMP_01\CIVIL\BRDG\W&LE RR BRIDGE\SHT34_CORE BORING 2.dgn
1/4/2022 2:55:15 PM

SUBSTRUCTURE UNIT:
ABUTMENT 2

LOG 1 OF 2

BORING NUMBER:	BORING LOCATION	START: 08/10/2020 2:15 PM	HAMMER: AUTOMATIC
SB-3	STATION: 782+51.5 OFFSET: 133.0 FT. RT.	FINISH: 08/11/2020 5:30 PM	EFFICIENCY: 0.8 ERa

DRILLING METHOD AND EQUIPMENT:	SIZE OF CORE:	VERTICAL SCALE:	TOP OF BORING ELEVATION:
DOUBLE TUBE-NQ, AUTOMATIC, CME 550	1.874 IN.	0 FT. [redacted] 5 FT.	993.0 FT.

DRILLING INSPECTOR: STEPHANIE CHECHAK
DRILLER & DRILLING COMPANY: DOUG SHOPE 7NT

▽ 0 HR. READING - ELAPSED TIME:El. 971.7 ft. - 0.0 hr.
▼ 24 HR. READING - ELAPSED TIME:El. 970.2 ft. - 16.5 hr.

ELEV.	GRAPHIC	MATERIAL DESCRIPTION	AASHTO/ USCS	SAMPLE DEPTH	SAMPLE NO.**	BLOW COUNT / PP/T TSF	N 60 / %RQD	REC (ft.)	REC (%)	◇ RQD % ◇ / ⊙ Soil/Rock Rec. % ⊙ / ▲ SPT (N_{60}) ▲ (20 40 60 80 / 10 20 30 40)
990		**SAND**, some Silt, little Clay, loose to medium dense, dry, heterogeneous, non-plastic, brown and gray, fill, *Sand is fine to coarse, Colors also include black, Railroad embankment fill, trace carbonaceous material throughout.*	a-1-b / sm	1.5	S-1	3-5-7	16	1.3	87	
		6.0'/El. 987.0		3.0	S-2	5-5-4	12	1.5	100	
				4.5	S-3	6-7-8	20	1.5	100	
				6.0	S-4	7-7-7	19	1.5	100	
985		**CLAY**, little Silt, trace Sand, medium to very stiff, damp, heterogeneous, mottled gray and brown, fill, *Plasticity is -PL to PL, Colors also include mottled with orange, Railroad embankment fill.*	a-6 / cl	7.5	S-5	7-8-8 **4.50**	21	1.5	100	
				9.0	S-6	3-3-4 **2.50**	9	1.5	100	
				10.5	S-7	3-4-5 **3.25**	12	1.5	100	
				12.0	S-8	4-4-5 **2.75**	12	1.3	87	
				13.5	S-9	3-4-4 **1.50**	11	1.5	100	
				15.0	S-10	2-3-3 **1.25**	8	0.8	53	
		16.5'/El. 976.5		16.5	S-11	3-3-4 **3.50**	9	1.5	100	
980				18.0	S-12	3-4-4 **1.50**	11	1.5	100	
				19.5	S-13	2-3-3 **1.25**	8	1.5	100	
				21.0	S-14	2-3-4 **1.00**	9	1.5	100	
975		**CLAY** and **SILT**, little Sand, medium to very stiff, damp, homogeneous, mottled brown and gray, alluvium, *Plasticity is -PL to PL, plasticity increased with depth.*	A-6 / CL	22.5	S-15	2-4-7 **1.00**	15	1.5	100	
				24.0	S-16	5-6-8 **3.50**	19	1.5	100	
				25.5	S-17	2-5-7 **4.00**	16	1.5	100	
				27.0	S-18	4-5-6 **3.50**	15	1.5	100	
970				28.5	S-19	3-4-5 **3.00**	12	1.5	100	
		28.5'/El. 964.5		30.0	S-20	2-3-4 **2.00**	9	1.3	87	
965		**SILT** and **CLAY**, trace Sand, medium to stiff, damp to moist, dark gray, alluvium, *Sand is fine, Plasticity is -PL to PL, plasticity varies with depth and silt content, Silt and sand content varies with depth.*		31.5	S-21	3-3-4 **2.75**	9	1.5	100	
				33.0	S-22	3-4-5 **1.75**	12	1.5	100	
				34.5	S-23	2-3-4 **1.00**	9	1.5	100	
				36.0	S-24	3-2-4 **0.50**	8	1.5	100	
960				37.5	S-25	2-4-4 **1.50**	11	1.5	100	
			A-6 / CL	39.0	S-26	WOH-3-4 **1.00**	9	1.5	100	
				40.5	S-27	3-4-6 **1.75**	13	1.5	100	
955				42.0	S-28	1-3-5 **2.00**	11	1.5	100	
				43.5	S-29	3-3-4 **1.25**	9	1.5	100	
				45.0	S-30	2-2-4 **2.25**	8	1.5	100	
		46.5'/El. 946.5		46.5	S-31	4-5-6 **1.50**	15	1.5	100	
950		**SAND** and **SILT**, some Clay, loose to medium dense, moist to wet, homogeneous, dark gray, alluvium, *Sand is fine to coarse, Clay plasticity is -PL to PL depending on silt content, sand sizes vary throughout, silt and clay content varies throughout.*	a-1-b / sm	48.0	S-32	5-6-10	21	1.5	100	
				49.5	S-33	1-4-7	15	1.5	100	
				51.0	S-34	3-4-6	13	1.5	100	
				52.5	S-35	3-5-7	16	1.5	100	
945				54.0	S-36	3-4-6	13	1.5	100	
				55.5	S-37	2-3-5	11	1.5	100	
		55.5'/El. 937.5		57.0	S-38	WOH-2-3 **0.50**	7	1.5	100	
940		**CLAY** and **SILT**, little Sand, soft to stiff, moist to wet, homogeneous, medium plastic fines, dark gray, alluvium.		58.5	S-39	WOH-2-2 **0.25**	5	1.5	100	
			A-6 / CL	60.0	S-40	WOH-2-2 **0.25**	5	1.5	100	
				61.5	S-41	WOH-2-2 **0.50**	5	1.5	100	
935				63.0	S-42	1-1-3 **1.00**	5	1.5	100	
930										

SUBSTRUCTURE UNIT:
ABUTMENT 2

LOG 2 OF 2

BORING NUMBER:	BORING LOCATION	VERTICAL SCALE:	
SB-3	STATION: 782+51.5 OFFSET: 133.0 FT. RT.	0 FT. [redacted] 5 FT.	▽ 0 HR.: El. 971.7 ft. - 0.0 hr. ▼ 24 HR.: El. 970.2 ft. - 16.5 hr.

ELEV.	GRAPHIC	MATERIAL DESCRIPTION	AASHTO/ USCS	SAMPLE DEPTH	SAMPLE NO.**	BLOW COUNT / PP/T TSF	N 60 / %RQD	REC (ft.)	REC (%)	◇ RQD % ◇ / ⊙ Soil/Rock Rec. % ⊙ / ▲ SPT (N_{60}) ▲ (20 40 60 80 / 10 20 30 40)
925		**CLAY** and **SILT**, little Sand, soft to stiff, moist to wet, homogeneous, medium plastic fines, dark gray, alluvium.*(Layer continued from the previous log page)*	A-6 / CL	64.5	S-43	2-3-4 **0.75**	9	1.5	100	
		66.5'/El. 926.5		66.0	S-44	2-4-7 **1.25**	15	1.5	100	
		SAND, some Silt, little Clay, medium dense to very dense, damp to moist, homogeneous, non-plastic, dark gray with mottled red, residuum, *Sand is coarse, Color is also dark gray mottled with dark brown. Coal and carbonaceous shale.*	a-1-b / sm	67.5	S-45	3-11-17	37	1.5	100	
				69.0	S-46	21-31-50	108	1.5	100	
				69.9	S-47	25-50/.4'	>67	0.9	100	
				70.5	A-1	50/.1"	>67	0.1	100	
		70.6'/El. 922.4		70.6	S-48		>67	0.3	100	
920		**SANDSTONE**, gray, medium hard to hard, slightly weathered, *Too little sample recovered to determine bedding or fracture spacing, Unit RQD = 0%.*		71.8	R-1		0%	0.3	25	
		71.8'/El. 921.2		73.8	R-2		35%	1.6	80	
		LIMESTONE, light gray to gray, medium hard, slightly weathered, thin to narrow bedding with flat dip, fracture zone, narrow to medium spacing, flat dip, *Bedding dip RD = 0, Fracture spacing RD = 0 - 45, Unit RQD = 35%. 77.8' - Sudden tool drop of approx. 0.4', no recovery in this zone. 78.8' - Sudden tool drop of approx. 0.7', no recovery in this zone.*		74.8	R-3		0%	1.0	100	
915				79.8	R-4		30%	4.0	80	
				84.8	R-5		50%	4.3	86	
		83.9' - 84.0' - Carbonaceous shale interbed. R-6 - loss of core likely due to difficult drilling. Driller indicated plugging up while drilling. Possible clay seams..			R-6		25%	0.6	37	
910		86.4'/El. 906.6								

EPTE 920.40

**SAMPLE NO. shading indicates lab testing performed.

GENERAL NOTES:

THIS SHEET IS INCLUDED FOR THE CONVENIENCE OF THE DEPARTMENT. REFER TO PUBLICATION 408 SECTION 102.05 FOR FURTHER INFORMATION.

FOR ADDITIONAL SOIL AND ROCK DESCRIPTIONS SEE PUBLICATION 222.

THE BORING LOGS AND RELATED INFORMATION DEPICT SUBSURFACE CONDITIONS ONLY AT THE SPECIFIC LOCATIONS AND DATES INDICATED. SUBSURFACE CONDITIONS MAY DIFFER FROM THE CONDITIONS REPORTED AT THE SPECIFIC LOCATIONS. ALSO, THE PASSAGE OF TIME MAY RESULT IN A CHANGE OF CONDITIONS AT THE BORING LOCATIONS.

LEGEND:

PP - POCKET PENETROMETER
T - TORVANE
RQD - ROCK QUALITY DESIGNATION
SPT - STANDARD PENETRATION TEST
BPCE - BOTTOM OF PILE CAP ELEVATION
EPTE - ESTIMATED PILE TIP ELEVATION

▽ - DENOTES 0 HOUR GROUND WATER ELEVATION
▼ - DENOTES 24 HOUR GROUND WATER ELEVATION
( ) - REMARKS

THE CLASSIFICATIONS OF THE MATERIAL ENCOUNTERED HAVE BEEN VERIFIED.

MBM
INITIAL

THE INFORMATION, AS SUBMITTED, ACCURATELY REPRESENTS THE CONDITIONS ENCOUNTERED BY THE TEST BORING PROGRAM, INCLUDING BORING LOGS, EARTH SAMPLES, ROCK CORES, CLASSIFICATION OF MATERIALS, & DEPTH OF BORINGS.

Matthew B. Morris 1-4-22
GEOTECHNICAL ENGINEER DATE

THE INFORMATION PROVIDED IS REPRESENTATIVE OF SUBSURFACE CONDITIONS ONLY AT THE LOCATIONS AND DEPTHS WHERE SUCH INFORMATION WAS OBTAINED, AND THERE IS NO EXPRESSED OR IMPLIED AGREEMENT THAT UNIFORMITY OF MATERIALS EXISTS BETWEEN EXPLORED LOCATIONS.
(SEE PUBLICATION 408/2020, SECTION 102.05.)

Mark	Description	By	Chk'd.	Recm'd.	Date
	REVISIONS				

S.R. 0051 PREVIOUSLY KNOWN AS L.R. 288

CERTIFIED CORRECT PLANS
Darrell R Hallman
Professional Engineer
Approved by Bureau of Technical Utility Services
PA PUBLIC UTILITY COMMISSION
ATTEST
Secretary

COMMONWEALTH OF PENNSYLVANIA REGISTERED PROFESSIONAL MATTHEW BROOKS MORRIS GEOLOGIST PG004584

COMMONWEALTH OF PENNSYLVANIA
DEPARTMENT OF TRANSPORTATION

WESTMORELAND COUNTY
S.R. 0070 SECTION E10
SEGMENT 40/41 OFFSET 1725 /1692 (NB/SB)
WHEELING & LAKE ERIE RAILROAD (MP C-17.01)
OVER S.R. 0051 STATION 82+91.42
SINGLE SPAN THROUGH GIRDER BRIDGE
CORE BORING 3

RECOMMENDED
Greg A. Paintz 1/18/2022
DISTRICT GEOTECHNICAL ENGINEER

SHEET 37 OF 44

DES: AGR | DWN: CJP | CHK: MBM

pw:\\gfnet-pw_bentley.com:gfnet-pw-01\Documents\Projects\61636\INPUT\COMP_01\CIVIL\BRDG\W&LE RR BRIDGE\SHT35_CORE BORING 3.dgn
1/4/2022 2:55:28 PM

SUBSTRUCTURE UNIT: LOG 1 OF 2

ABUTMENT 1/WINGWALL A

BORING NUMBER:	BORING LOCATION	START: 07/31/2020 1:00 PM	HAMMER: AUTOMATIC
SB-4	STATION: 782+88.1 OFFSET: 99.5 FT. LT.	FINISH: 07/31/2020 1:30 PM	EFFICIENCY: 0.8 ERa

DRILLING METHOD AND EQUIPMENT:	SIZE OF CORE:	VERTICAL SCALE:	TOP OF BORING ELEVATION:
DOUBLE TUBE WIRE LINE-HQ, AUTOMATIC, CME 55 TRAILER	"NO RECORD"	0 FT. 5 FT.	994.7 FT.

DRILLING INSPECTOR: DAVID ROEBUCK
DRILLER & DRILLING COMPANY: FORREST SMITH 7NT

▽ 0 HR. READING - ELAPSED TIME: El. 970.2 ft. - 0.5 hr.
▼ 24 HR. READING - ELAPSED TIME: El. 969.1 ft. - 66.0 hr.

ELEV.	GRAPHIC	MATERIAL DESCRIPTION	AASHTO/ USCS	SAMPLE DEPTH	SAMPLE NO.**	BLOW COUNT / PP/T TSF	N 60 / %RQD	REC (ft.)	REC (%)	◇ RQD % ◇ ⊙ Soil/Rock Rec. % ⊙ (20 40 60 80) ▲ SPT (N_{60}) ▲ (10 20 30 40)
990		Coarse **GRAVEL** and **SAND**, some Silt, contains slag, very loose to medium dense, damp, non-plastic, dark brown gray black, fill. 9.0'/El. 985.7	a-1-b / gp	1.5	S-1	2-1-1	3	0.3	20	
				3.0	S-2	2-2-1	4	0.4	27	
				4.5	S-3	1-1-WOH	1	0.4	27	
				6.0	S-4	1-3-5	11	0.0	0	
				7.5	S-5	2-5-8	17	1.0	67	
				9.0	S-6	3-2-3	7	0.4	27	
985		**CLAY**, little Sand, trace Silt, medium, moist, high plastic fines, brown, fill. 12.0'/El. 982.7	a-6 / cl	10.5	S-7	2-3-2 (0.50)	7	1.3	87	
				12.0	S-8	2-2-23 (0.50)	33	1.2	80	
		GRAVEL, some Clay, little Sand, trace Silt, loose, moist, low plastic fines, dark gray, fill. 16.5'/El. 978.2	a-1-b / gc	13.5	S-9	2-4-6	13	1.5	100	
980				15.0	S-10	3-4-6	13	1.3	87	
				16.5	S-11	1-3-3	8	1.0	67	
		SAND and **SILT**, some Gravel, loose to very dense, damp, non-plastic, gray to dark gray, fill. 24.0'/El. 970.7	a-2-4 / sm	18.0	S-12	4-25-35	80	1.2	80	
				19.5	S-13	13-11-6	23	1.4	93	
				21.0	S-14	2-2-4	8	0.9	60	
975				22.5	S-15	3-5-8	17	1.2	80	
				24.0	S-16	8-4-3	9	0.6	40	
970 ▽▼		**SAND**, some Silt, little Clay, stiff to very stiff, moist, high plastic fines, brown mottled brown tan, alluvium. 31.5'/El. 963.2	A-4 / CL	25.5	S-17	3-3-7 (1.00)	13	1.5	100	
				27.0	S-18	4-7-10 (2.00)	23	1.4	93	
BPCE 967.08				28.5	S-19	4-5-7 (1.50)	16	1.5	100	
				30.0	S-20	4-8-11 (2.00)	25	1.5	100	
965				31.5	S-21	4-7-13	27	1.5	100	
		SAND, some Silt, little Gravel, little Clay, very dense, moist, non-plastic, dark gray, alluvium. 40.5'/El. 954.2	A-2-4 / SM	33.0	S-22	15-34-49	111	1.5	100	
				34.4	S-23	7-27-50/.4'	103	1.4	100	
960				34.5	A-1 S-24	18-36-50/.4'	115	1.2	86	
				36.0	A-2 S-25	20-28-39	89	1.0	67	
				37.5	S-26	13-20-38	77	1.1	73	
				39.0	S-27	17-15-17	43	1.0	67	
955		**CLAY**, some Silt, trace Sand, stiff to very stiff, moist, high plastic fines, gray, alluvium. 44.0'/El. 950.7	a-6 / cl	40.5	S-28	3-4-5 (1.00)	12	1.3	87	
				42.0	S-29	4-6-17 (2.50)	31	1.5	100	
				43.5	S-30	8-26-24	67	1.5	100	
		GRAVEL and **SAND**, some Clay, damp to moist, non-plastic, gray, residuum, *sand is medium, gravel is siltstone fragments.* 48.1'/El. 946.6	a-1-b / gc	45.0	S-31	14-50	67	0.9	82	
950				46.1	A-3 S-32	50/.2"	>67	0.2	100	
				46.7	A-4 S-33	50/.1"	>67	0.1	100	
EPTE 945.60		**SILTSTONE**, gray, medium hard, highly weathered to slightly weathered, narrow to moderate bedding with flat dip, medium spacing, flat dip, open joints, *Unit RQD = 16%.* 59.4'/El. 935.3		48.1	R-1		0%	0.9	60	
945				49.6	R-2		0%	2.4	80	
				52.6	R-3		36%	4.4	88	
940				57.6	R-4		12%	4.8	96	
		LIMESTONE, gray, hard, slightly weathered, moderate bedding with flat dip, close spacing, sheer dip, *Unit RQD = 0%. 60.6, 61.6, 62.6: coal, black, soft.* 62.6'/El. 932.1								
935										

SUBSTRUCTURE UNIT: LOG 2 OF 2

ABUTMENT 1/WINGWALL A

BORING NUMBER:	BORING LOCATION	VERTICAL SCALE:	
SB-4	STATION: 782+88.1 OFFSET: 99.5 FT. LT.	0 FT. 5 FT.	▽ 0 HR.: El. 970.2 ft. - 0.5 hr. ▼ 24 HR.: El. 969.1 ft. - 66.0 hr.

ELEV.	GRAPHIC	MATERIAL DESCRIPTION	AASHTO/ USCS	SAMPLE DEPTH	SAMPLE NO.**	BLOW COUNT / PP/T TSF	N 60 / %RQD	REC (ft.)	REC (%)	◇ RQD % ◇ ⊙ Soil/Rock Rec. % ⊙ (20 40 60 80) ▲ SPT (N_{60}) ▲ (10 20 30 40)

**SAMPLE NO. shading indicates lab testing performed.

GENERAL NOTES:

THIS SHEET IS INCLUDED FOR THE CONVENIENCE OF THE DEPARTMENT. REFER TO PUBLICATION 408 SECTION 102.05 FOR FURTHER INFORMATION.

FOR ADDITIONAL SOIL AND ROCK DESCRIPTIONS SEE PUBLICATION 222.

THE BORING LOGS AND RELATED INFORMATION DEPICT SUBSURFACE CONDITIONS ONLY AT THE SPECIFIC LOCATIONS AND DATES INDICATED. SUBSURFACE CONDITIONS MAY DIFFER FROM THE CONDITIONS REPORTED AT THE SPECIFIC LOCATIONS. ALSO, THE PASSAGE OF TIME MAY RESULT IN A CHANGE OF CONDITIONS AT THE BORING LOCATIONS.

LEGEND:

PP - POCKET PENETROMETER
T - TORVANE
RQD - ROCK QUALITY DESIGNATION
SPT - STANDARD PENETRATION TEST
BPCE - BOTTOM OF PILE CAP ELEVATION
EPTE - ESTIMATED PILE TIP ELEVATION

▽ - DENOTES 0 HOUR GROUND WATER ELEVATION
▼ - DENOTES 24 HOUR GROUND WATER ELEVATION
( ) - REMARKS

THE CLASSIFICATIONS OF THE MATERIAL ENCOUNTERED HAVE BEEN VERIFIED.

MBM
INITIAL

THE INFORMATION, AS SUBMITTED, ACCURATELY REPRESENTS THE CONDITIONS ENCOUNTERED BY THE TEST BORING PROGRAM, INCLUDING BORING LOGS, EARTH SAMPLES, ROCK CORES, CLASSIFICATION OF MATERIALS, & DEPTH OF BORINGS.

Matthew B. Morris 1-4-22
GEOTECHNICAL ENGINEER DATE

THE INFORMATION PROVIDED IS REPRESENTATIVE OF SUBSURFACE CONDITIONS ONLY AT THE LOCATIONS AND DEPTHS WHERE SUCH INFORMATION WAS OBTAINED, AND THERE IS NO EXPRESSED OR IMPLIED AGREEMENT THAT UNIFORMITY OF MATERIALS EXISTS BETWEEN EXPLORED LOCATIONS. (SEE PUBLICATION 408/2020, SECTION 102.05.)

Mark	Description	By	Chk'd.	Recm'd.	Date
	REVISIONS				

S.R. 0051 PREVIOUSLY KNOWN AS L.R. 288

COMMONWEALTH OF PENNSYLVANIA
DEPARTMENT OF TRANSPORTATION

WESTMORELAND COUNTY
S.R. 0070 SECTION E10
SEGMENT 40/41 OFFSET 1725 /1692 (NB/SB)
WHEELING & LAKE ERIE RAILROAD (MP C-17.01)
OVER S.R. 0051 STATION 82+91.42
SINGLE SPAN THROUGH GIRDER BRIDGE
CORE BORING 4

CERTIFIED CORRECT PLANS
Professional Engineer
Approved by Bureau of Technical Utility Services
PA PUBLIC UTILITY COMMISSION
ATTEST Secretary

COMMONWEALTH OF PENNSYLVANIA REGISTERED PROFESSIONAL MATTHEW BROOKS MORRIS GEOLOGIST PG004584

RECOMMENDED
Roy A. Paintz 1/18/2022
DISTRICT GEOTECHNICAL ENGINEER

SHEET 38 OF 44

DES: AGR | DWN: CJP | CHK: MBM

pw:\\gfnet-pw.bentley.com:gfnet-pw-01\Documents\Projects\61636\INPUT\COMP_01\CIVIL\BRDG\W&LE RR BRIDGE\SHT36_CORE BORING 4.dgn
1/4/2022 2:55:41 PM

SUBSTRUCTURE UNIT:
ABUTMENT 1

LOG 1 OF 2

BORING NUMBER:	BORING LOCATION	START: 08/03/2020 3:30 PM	HAMMER: AUTOMATIC
SB-5	STATION: 782+90.0 OFFSET: 53.0 FT. LT.	FINISH: 08/04/2020 4:30 PM	EFFICIENCY: 0.8 ERa

DRILLING METHOD AND EQUIPMENT:	SIZE OF CORE:	VERTICAL SCALE:	TOP OF BORING ELEVATION:
DOUBLE TUBE WIRE LINE-HQ, AUTOMATIC, CME 55 TRAILER	"NO RECORD"	0 FT. [redacted] 5 FT.	987.2 FT.

DRILLING INSPECTOR: DAVID ROEBUCK
DRILLER & DRILLING COMPANY: FORREST SMITH
7NT

▽ 0 HR. READING - ELAPSED TIME: El. 962.2 ft. - 0.0 hr.
▼ 24 HR. READING - ELAPSED TIME: El. 962.7 ft. - 18.0 hr.

ELEV.	GRAPHIC	MATERIAL DESCRIPTION	AASHTO/ USCS	SAMPLE DEPTH	SAMPLE NO.**	BLOW COUNT / PP/T TSF	N 60 / %RQD	REC (ft.)	REC (%)	◇ RQD % ◇ ⊙ Soil/Rock Rec. % ⊙ 20 40 60 80 ▲ SPT (N_{60}) ▲ 10 20 30 40
985		**SAND** and **SILT**, some Gravel, very loose to loose, moist, non-plastic, gray gray brown, fill.	a-2-4 / sm	1.5	S-1	2-3-4	9	1.2	80	
		7.5'/El. 979.7		3.0	S-2	2-3-2	7	0.8	53	
				4.5	S-3	3-2-2	5	1.3	87	
				6.0	S-4	3-2-2	5	0.6	40	
980				7.5	S-5	2-3-2	7	1.0	67	
				9.0	S-6	4-6-5	15	1.0	67	
		GRAVEL and **SAND**, some Silt, loose to medium dense, damp to moist, non-plastic, gray brown gray, fill.	a-1-b / gm	10.5	S-7	8-6-4	13	1.2	80	
		13.5'/El. 973.7		12.0	S-8	4-4-17	28	1.3	87	
975				13.5	S-9	5-1-3	5	1.2	80	
		SAND, some Clay, little Silt, very loose to loose, moist, low plastic fines, dark brown black, fill.	a-2-4 / sc	15.0	S-10	4-3-3	8	1.4	93	
		19.5'/El. 967.7		16.5	S-11	4-2-3	7	1.2	80	
				18.0	S-12	3-3-1	5	1.2	80	
970				19.5	S-13	3-3-3	8	0.6	40	
		BPCE 967.08								
		SAND and **SILT**, some Gravel, loose, moist, non-plastic, gray dark gray, fill.	a-2-4 / sm	21.0	S-14	5-5-5	13	1.0	67	
		22.5'/El. 964.7		22.5	S-15	4-5-3	11	0.8	53	
965		**CLAY**, some Silt, little Sand, medium to very stiff, moist, high plastic fines, brown mottled gray tan, alluvium.	a-6 / cl	24.0	S-16	2-2-4 / 1.00	8	1.2	80	
				25.5	S-17	2-3-6 / 1.50	12	1.3	87	
				27.0	S-18	2-4-8 / 2.00	16	1.5	100	
				28.5	S-19	6-9-12 / 2.50	28	1.5	100	
960				30.0	S-20	3-5-6 / 1.50	15	1.5	100	
		31.5'/El. 955.7		31.5	S-21	3-4-6 / 1.50	13	1.5	100	
		SILT and **CLAY**, some Sand, very soft to stiff, moist, high plastic fines, gray, alluvium.	a-4 / cl	33.0	S-22	2-4-6 / 1.50	13	1.5	100	
				34.5	S-23	2-2-2 / 0.50	5	1.5	100	
				36.0	S-24	1-2-2 / 0.50	5	1.5	100	
955				37.5	S-25	1-2-2 / 0.25	5	1.5	100	
				39.0	S-26	WOH-WOH-2 / 0.25	3	1.5	100	
				40.5	S-27	1-1-2 / 0.25	4	1.5	100	
				42.0	S-28	1-2-3 / 0.50	7	1.5	100	
950				43.5	S-29	WOH-WOH-5 / 0.50	7	1.5	100	
		43.0'/El. 944.2		45.0	S-30	WOH-4-7 / 1.00	15	1.5	100	
		SILT, some Clay, some Sand, medium to stiff, moist, high plastic fines, gray, alluvium.	A-4 / ML	46.5	S-31	WOH-3-4 / 1.00	9	1.5	100	
				48.0	S-32	2-4-4 / 1.00	11	1.5	100	
945				49.5	S-33	4-4-8 / 1.50	16	1.5	100	
		49.5'/El. 937.7		51.0	S-34	8-12-20 / 9-14-29	43	1.3	87	
		SAND, some Clay, little Silt, dense, moist, low plastic fines, gray black, alluvium.	a-2-4 / sc	52.5	S-35	23-40-50	57	1.5	100	
		53.0'/El. 934.2		54.0	S-36	50	120	1.0	67	
940				54.5	S-37		67	0.5	100	
		GRAVEL and **SAND**, some Clay, very dense, damp, non-plastic, gray, residuum, *sand is medium, gravel is siltstone fragments.*	a-1-b / gc	55.5	A-1	33-50/.3'	>67	0.4	50	
				56.3	S-38					
				57.0	A-2	30-42-50	123	1.2	80	
935				58.5	S-29					
				60.0	S-40	22-25-28	71	1.0	67	
				61.0	S-41	27-50	67	0.5	50	
				61.5	A-3	50/.4'	>67	0.4	100	
930				61.9	S-42					
				63.0	A-4	50/.2'	>67	0.2	100	
		63.2'/El. 924.0								
925										

SUBSTRUCTURE UNIT:
ABUTMENT 1

LOG 2 OF 2

BORING NUMBER:	BORING LOCATION	VERTICAL SCALE:	
SB-5	STATION: 782+90.0 OFFSET: 53.0 FT. LT.	0 FT. [redacted] 5 FT.	▽ 0 HR.: El. 962.2 ft. - 0.0 hr. ▼ 24 HR.: El. 962.7 ft. - 18.0 hr.

ELEV.	GRAPHIC	MATERIAL DESCRIPTION	AASHTO/ USCS	SAMPLE DEPTH	SAMPLE NO.**	BLOW COUNT / PP/T TSF	N 60 / %RQD	REC (ft.)	REC (%)	◇ RQD % ◇ ⊙ Soil/Rock Rec. % ⊙ 20 40 60 80 ▲ SPT (N_{60}) ▲ 10 20 30 40
		EPTE 922.40		63.2	S-43		31%	1.0	77	
920		**COAL**, black, soft, highly weathered. *(Layer continued from the previous log page)*		64.5	R-1					
		63.8'/El. 923.4			R-2		50%	2.9	97	
		SILTSTONE, gray, medium hard, slightly weathered, moderate bedding with flat dip, medium spacing, flat dip, narrow joint opening, *Unit RQD = 32%.*		67.5	R-3		44%	2.4	96	
915		*70.0' lost water return, water never returned.*		70.0	R-4		74%	4.5	90	
		72.9'/El. 914.3								
		71.9 - 72.9: carbonous.		75.0	R-5		71%	3.2	91	
		LIMESTONE, gray, hard, slightly weathered to fresh, moderate bedding with flat dip, medium spacing, flat dip, narrow joint opening, *Unit RQD = 80%.*								
910		78.5'/El. 908.7								

**SAMPLE NO. shading indicates lab testing performed.

GENERAL NOTES:

THIS SHEET IS INCLUDED FOR THE CONVENIENCE OF THE DEPARTMENT. REFER TO PUBLICATION 408 SECTION 102.05 FOR FURTHER INFORMATION.

FOR ADDITIONAL SOIL AND ROCK DESCRIPTIONS SEE PUBLICATION 222.

THE BORING LOGS AND RELATED INFORMATION DEPICT SUBSURFACE CONDITIONS ONLY AT THE SPECIFIC LOCATIONS AND DATES INDICATED. SUBSURFACE CONDITIONS MAY DIFFER FROM THE CONDITIONS REPORTED AT THE SPECIFIC LOCATIONS. ALSO, THE PASSAGE OF TIME MAY RESULT IN A CHANGE OF CONDITIONS AT THE BORING LOCATIONS.

LEGEND:

PP - POCKET PENETROMETER
T - TORVANE
RQD - ROCK QUALITY DESIGNATION
SPT - STANDARD PENETRATION TEST
BPCE - BOTTOM OF PILE CAP ELEVATION
EPTE - ESTIMATED PILE TIP ELEVATION

▽ - DENOTES 0 HOUR GROUND WATER ELEVATION
▼ - DENOTES 24 HOUR GROUND WATER ELEVATION
( ) - REMARKS

THE CLASSIFICATIONS OF THE MATERIAL ENCOUNTERED HAVE BEEN VERIFIED.

MBM
INITIAL

THE INFORMATION, AS SUBMITTED, ACCURATELY REPRESENTS THE CONDITIONS ENCOUNTERED BY THE TEST BORING PROGRAM, INCLUDING BORING LOGS, EARTH SAMPLES, ROCK CORES, CLASSIFICATION OF MATERIALS, & DEPTH OF BORINGS.

Matthew B. Morris 1-4-22
GEOTECHNICAL ENGINEER DATE

THE INFORMATION PROVIDED IS REPRESENTATIVE OF SUBSURFACE CONDITIONS ONLY AT THE LOCATIONS AND DEPTHS WHERE SUCH INFORMATION WAS OBTAINED, AND THERE IS NO EXPRESSED OR IMPLIED AGREEMENT THAT UNIFORMITY OF MATERIALS EXISTS BETWEEN EXPLORED LOCATIONS.
(SEE PUBLICATION 408/2020, SECTION 102.05.)

Mark	Description	By	Chk'd.	Recm'd.	Date
	REVISIONS				

S.R. 0051 PREVIOUSLY KNOWN AS L.R. 288

COMMONWEALTH OF PENNSYLVANIA
DEPARTMENT OF TRANSPORTATION

WESTMORELAND COUNTY
S.R. 0070 SECTION E10
SEGMENT 40/41 OFFSET 1725 /1692 (NB/SB)
WHEELING & LAKE ERIE RAILROAD (MP C-17.01)
OVER S.R. 0051 STATION 82+91.42
SINGLE SPAN THROUGH GIRDER BRIDGE
CORE BORING 5

CERTIFIED CORRECT PLANS
David A. Hallowich
Professional Engineer
Approved by Bureau of Technical Utility Services
PA PUBLIC UTILITY COMMISSION
ATTEST Rosemary Chiavetta
Secretary

COMMONWEALTH OF PENNSYLVANIA
REGISTERED
PROFESSIONAL
MATTHEW BROOKS MORRIS
GEOLOGIST
PG004584

RECOMMENDED Doug A. Reinhart 1/18/2022
DISTRICT GEOTECHNICAL ENGINEER

SHEET 39 OF 44

DES: AGR | DWN: CJP | CHK: MBM

pw:\\gfnet-pw.bentley.com:gfnet-pw-01\Documents\Projects\61636\INPUT\COMP_01\CIVIL\BRDG\W&LE RR BRIDGE\SHT37_CORE BORING 5.dgn
1/4/2022 2:55:49 PM

SUBSTRUCTURE UNIT:

ABUTMENT 1/WINGWALL B

LOG 1 OF 1

BORING NUMBER:	BORING LOCATION	START: 07/22/2020 11:15 AM	HAMMER: AUTOMATIC
SB-6	STATION: 783+40.7 OFFSET: 56.5 FT. LT.	FINISH: 07/23/2020 2:30 PM	EFFICIENCY: 0.8 ERa

DRILLING METHOD AND EQUIPMENT:	SIZE OF CORE:	VERTICAL SCALE:	TOP OF BORING ELEVATION:
DOUBLE TUBE WIRE LINE-HQ, AUTOMATIC, CME 55 TRAILER	"NO RECORD"	0 FT. 5 FT.	972.5 FT.

DRILLING INSPECTOR: DAVID ROEBUCK
DRILLER & DRILLING COMPANY: FORREST SMITH 7NT

▽ 0 HR. READING - ELAPSED TIME: El. 966.0 ft. - 0.0 hr.
▼ 24 HR. READING - ELAPSED TIME: El. 968.1 ft. - 17.5 hr.

ELEV.	GRAPHIC	MATERIAL DESCRIPTION	AASHTO/ USCS	SAMPLE DEPTH	SAMPLE NO. **	BLOW COUNT	PP/T TSF	N 60 / %RQD	REC (ft.)	REC (%)	◇ RQD % ◇ ⊙ Soil/Rock Rec. % ⊙ ▲ SPT (N_{60}) ▲ 20 40 60 80 / 10 20 30 40
970		**TOPSOIL.** 0.5'/El. 972.0	a-6 / cl	1.5	S-1	3-5-5 **1.50**		13	1.2	80	
		CLAY and **SILT**, little Sand, medium to stiff, moist, low plastic fines, brown, fill. 3.0'/El. 969.5		3.0	S-2	4-4-4 **1.25**		11	0.3	20	
		CLAY, some Silt, little Sand, medium to stiff, moist, high plastic fines, brown mottled brown tan, alluvium. 9.0'/El. 963.5	a-6 / cl	4.5	S-3	3-2-3 **1.00**		7	1.5	100	
965				6.0	S-4	3-4-4 **1.00**		11	1.5	100	
				7.5	S-5	3-5-6 **1.50**		15	1.5	100	
				9.0	S-6	3-3-5 **1.50**		11	1.5	100	
		CLAY and **SILT**, some Sand, soft to medium, moist, high plastic fines, gray, alluvium. 15.0'/El. 957.5	a-6 / cl	10.5	S-7	2-2-3 **1.00**		7	1.5	100	
				12.0	S-8	1-1-3 **0.50**		5	1.5	100	
960				13.5	S-9	2-3-3 **0.75**		8	1.5	100	
				15.0	S-10	WOH-1-3 **0.50**		5	1.5	100	
		SAND, some Silt, trace Clay, trace Gravel, medium to very stiff, moist, low plastic fines, gray dark gray, alluvium. 21.0'/El. 951.5	A-4 / SM	16.5	S-11	4-6-10 **2.50**		21	1.5	100	
				18.0	S-12	8-7-6 **2.00**		17	1.5	100	
955				19.5	S-13	1-3-3 **1.00**		8	1.5	100	
				21.0	S-14	7-12-8 **2.50**		27	1.5	100	
		Fine and medium **SAND**, some Clay, some Gravel, hard, damp, low plastic fines, gray dark gray, alluvium. 24.0'/El. 948.5	a-1-b / sc	22.3	S-15	6-33-50/.3'		111	1.0	77	
				22.5	A-1 S-16	30-50		67	1.0	100	
		CLAY and **SAND**, some Silt, very stiff, moist, low plastic fines, gray dark gray, alluvium. 27.0'/El. 945.5	a-6 / cl	23.5	A-2 S-17	9-9-9 **2.00**		24	1.0	67	
950				25.5	S-18	4-9-10 **2.50**		25	1.5	100	
				27.0	S-19	5-6-6 **1.50**		16	1.5	100	
		CLAY, some Silt, trace Sand, stiff, moist, high plastic fines, gray dark gray, alluvium. 31.5'/El. 941.0	a-6 / cl	28.5	S-20	1-6-7 **1.50**		17	0.9	60	
				30.0	S-21	5-5-7 **1.75**		16	1.5	100	
945				31.5	S-22	11-30-35		87	1.5	100	
		SILT and **SAND**, some Clay, hard, damp, low plastic fines, gray, residuum. 36.0'/El. 936.5	a-2-4 / sm	33.0	S-23	8-21-50		95	1.0	67	
				34.5	S-24	35-50/.3'		>67	0.6	75	
				35.3	A-3 S-25	50/.3'		>67	0.5	167	
940		**GRAVEL** and **SAND**, some Clay, very dense, dry to damp, low plastic fines, gray, residuum, *sand is medium, gravel is siltstone fragments.* 40.6'/El. 931.9	a-1-b / gc	36.0	A-4 S-26	50/.2'		>67	0.2	100	
				37.5	A-5 S-27	50/.4'		>67	0.2	50	
				39.0	A-6 S-28	50/.1'		>67	0.1	100	
935				40.5	R-1			0%	0.0	0	
		SILTSTONE, gray to black, medium hard, slightly weathered, narrow to moderate bedding with flat dip, random fractures, medium spacing, *Unit RQD = 20%.* 46.1'/El. 926.4		40.6							
EPTE 930.90				43.1	R-2			13%	2.0	67	
930		*Lost shoe from split spoon on S-27. Shoe was lodged in core barrel, thus inhibiting the recovery of rock core..*		46.1	R-3			0%	0.0	0	
				51.1	R-4			0%	0.0	0	
925											
920											

BPCE 967.08

**SAMPLE NO. shading indicates lab testing performed.

SUBSTRUCTURE UNIT:

ABUTMENT 1/WINGWALL B

LOG 1 OF 1

BORING NUMBER:	BORING LOCATION	START: 07/23/2020 3:30 PM	HAMMER: AUTOMATIC
SB-6A	STATION: 783+40.7 OFFSET: 60.5 FT. LT.	FINISH: 07/24/2020 10:30 AM	EFFICIENCY: 0.8 ERa

DRILLING METHOD AND EQUIPMENT:	SIZE OF CORE:	VERTICAL SCALE:	TOP OF BORING ELEVATION:
DOUBLE TUBE WIRE LINE-HQ, AUTOMATIC, CME 55 TRAILER	"NO RECORD"	0 FT. 5 FT.	972.5 FT.

DRILLING INSPECTOR: DAVID ROEBUCK
DRILLER & DRILLING COMPANY: FORREST SMITH 7NT

▽ 0 HR. READING - ELAPSED TIME: El. 969.1 ft. - 0.0 hr.
▼ 24 HR. READING - ELAPSED TIME: NR - NR

ELEV.	GRAPHIC	MATERIAL DESCRIPTION	AASHTO/ USCS	SAMPLE DEPTH	SAMPLE NO. **	BLOW COUNT	PP/T TSF	N 60 / %RQD	REC (ft.)	REC (%)	◇ RQD % ◇ ⊙ Soil/Rock Rec. % ⊙ ▲ SPT (N_{60}) ▲ 20 40 60 80 / 10 20 30 40
970	UNS	*Augered sample.* 11.0'/El. 961.5									
965		*Shelby Tube taken at 250-300 psi at 11.0 - 13.0'.* 13.0'/El. 959.5	A-6 / CL	11.0	ST-1				1.6	80	
960		*Augered sample.* 40.0'/El. 932.5		13.0							
955		**LIMESTONE**, gray, hard, slightly weathered, moderate bedding with flat dip, random fractures, close spacing, sheer dip, tight joints, *Unit RQD = 19%.* 43.6'/El. 928.9		40.0	R-1			18%	1.2	43	
950		*42.8 - 43.6: carbonaceus.*		42.8	R-2			20%	2.3	77	
945		**SANDSTONE interbedded with SHALE**, gray to dark gray, medium hard, slightly weathered, narrow to moderate bedding with flat dip, moderate spacing, flat dip, narrow joint opening, *Unit RQD = 28%.* 48.2'/El. 924.3		45.8	R-3			14%	4.6	92	
940		**SHALE**, gray to dark gray, hard, slightly weathered, narrow to moderate bedding with flat dip, moderate spacing, flat dip, narrow joint opening, *Unit RQD = 11%.* 52.0'/El. 920.5		50.8	R-4			56%	4.4	88	
935		**LIMESTONE**, gray, hard, slightly weathered to fresh, moderate to medium bedding with flat dip, medium spacing, steep dip, tight joints, *Unit RQD = 76%.* 55.8'/El. 916.7									
EPTE 930.90											
930											
925											
920											

BPCE 967.08

**SAMPLE NO. shading indicates lab testing performed.

NOTE: OFFSET 4' LEFT OF SB-6

GENERAL NOTES:

THIS SHEET IS INCLUDED FOR THE CONVENIENCE OF THE DEPARTMENT. REFER TO PUBLICATION 408 SECTION 102.05 FOR FURTHER INFORMATION.

FOR ADDITIONAL SOIL AND ROCK DESCRIPTIONS SEE PUBLICATION 222.

THE BORING LOGS AND RELATED INFORMATION DEPICT SUBSURFACE CONDITIONS ONLY AT THE SPECIFIC LOCATIONS AND DATES INDICATED. SUBSURFACE CONDITIONS MAY DIFFER FROM THE CONDITIONS REPORTED AT THE SPECIFIC LOCATIONS. ALSO, THE PASSAGE OF TIME MAY RESULT IN A CHANGE OF CONDITIONS AT THE BORING LOCATIONS.

LEGEND:

PP - POCKET PENETROMETER
T - TORVANE
RQD - ROCK QUALITY DESIGNATION
SPT - STANDARD PENETRATION TEST
BPCE - BOTTOM OF PILE CAP ELEVATION
EPTE - ESTIMATED PILE TIP ELEVATION

▽ - DENOTES 0 HOUR GROUND WATER ELEVATION
▼ - DENOTES 24 HOUR GROUND WATER ELEVATION
( ) - REMARKS

THE CLASSIFICATIONS OF THE MATERIAL ENCOUNTERED HAVE BEEN VERIFIED.

MBM
INITIAL

THE INFORMATION, AS SUBMITTED, ACCURATELY REPRESENTS THE CONDITIONS ENCOUNTERED BY THE TEST BORING PROGRAM, INCLUDING BORING LOGS, EARTH SAMPLES, ROCK CORES, CLASSIFICATION OF MATERIALS, & DEPTH OF BORINGS.

Matthew B. Morris 1-4-22
GEOTECHNICAL ENGINEER DATE

THE INFORMATION PROVIDED IS REPRESENTATIVE OF SUBSURFACE CONDITIONS ONLY AT THE LOCATIONS AND DEPTHS WHERE SUCH INFORMATION WAS OBTAINED, AND THERE IS NO EXPRESSED OR IMPLIED AGREEMENT THAT UNIFORMITY OF MATERIALS EXISTS BETWEEN EXPLORED LOCATIONS.
(SEE PUBLICATION 408/2020, SECTION 102.05.)

Mark	Description	By	Chk'd.	Recm'd.	Date
	REVISIONS				

S.R. 0051 PREVIOUSLY KNOWN AS L.R. 288

COMMONWEALTH OF PENNSYLVANIA
DEPARTMENT OF TRANSPORTATION

WESTMORELAND COUNTY
S.R. 0070 SECTION E10
SEGMENT 40/41 OFFSET 1725 /1692 (NB/SB)
WHEELING & LAKE ERIE RAILROAD (MP C-17.01)
OVER S.R. 0051 STATION 82+91.42
SINGLE SPAN THROUGH GIRDER BRIDGE
CORE BORING 6 & 6A

CERTIFIED CORRECT PLANS
Professional Engineer
Approved by Bureau of Technical Utility Services
PA PUBLIC UTILITY COMMISSION
ATTEST Secretary

COMMONWEALTH OF PENNSYLVANIA REGISTERED PROFESSIONAL MATTHEW BROOKS MORRIS GEOLOGIST PG004584

RECOMMENDED
Roy A. Paints 1/18/2022
DISTRICT GEOTECHNICAL ENGINEER

SHEET 40 OF 44

DES: AGR | DWN: CJP | CHK: MBM

pw:\\gfnet-pw.bentley.com:gfnet-pw-01\Documents\Projects\61636\INPUT\COMP_01\CIVIL\BRDGW&LE RR BRIDGE\SHT38_CORE BORING 6 & 6A.dgn
1/4/2022 2:55:59 PM

SUBSTRUCTURE UNIT:

ABUTMENT 2 / WINGWALL C

LOG 1 OF 2

BORING NUMBER:	BORING LOCATION	START: 11/06/2018 8:00 AM	HAMMER: AUTOMATIC
R-103	STATION: 782+90.0 OFFSET: 73.0 FT. RT.	FINISH: 11/07/2018 10:00 AM	EFFICIENCY: 0.8 ERa

DRILLING METHOD AND EQUIPMENT:	SIZE OF CORE:	VERTICAL SCALE:	TOP OF BORING ELEVATION:
DOUBLE TUBE-NQ, AUTOMATIC, CME 45C	2.000 IN.	0 FT. 2.5 FT.	976.3 FT.

DRILLING INSPECTOR: JESSE LAPE
DRILLER & DRILLING COMPANY:JIM LANG SR
PENNSYLVANIA DRILLING COMPANY

▽ 0 HR. READING - ELAPSED TIME: El. 972.1 ft. - 0.0 hr.
▼ 24 HR. READING - ELAPSED TIME: El. 971.3 ft. - 119.0 hr.

ELEV.	GRAPHIC	MATERIAL DESCRIPTION	AASHTO/ USCS	SAMPLE DEPTH	SAMPLE NO.	BLOW COUNT / PP/T TSF	N 60 / %RQD	REC (ft.)	REC (%)	◇ RQD % ◇ ⊙ Soil/Rock Rec. % ⊙ (20 40 60 80) ▲ SPT (N_{60}) ▲ (10 20 30 40)
975		**TOPSOIL**, Organics, very loose, moist. 0.5'/El. 975.8								
		SAND, little Organics, contains ash and cinders, loose, moist, non-plastic, black, fill. 1.3'/El. 975.0	a-1-b / sm.	1.5	S-1	1-2-4 **1.00**	8	1.2	80	
		CLAY, some Silt, some Gravel, little Sand, medium to stiff, moist, dark brown to orange brown, fill, *tan brown, gray, +PL, -LL, gravel is sandstone and carbonaceous rock fragments.* 4.5'/El. 971.8	a-6 / cl	3.0	S-2	3-3-4 **1.00**	9	0.4	27	
970				4.5	S-3	3-3-4 **1.00**	9	0.2	13	
		CLAY, some Silt, little Sand, trace Gravel, medium to stiff, moist, mottled tan brown to orange brown, alluvium, *gray, +PL, -LL, sand is very fine-grain, gravel is fine carbonaceous rock fragments.* 13.5'/El. 962.8	a-6 / cl	6.0	S-4	2-3-4 **1.50**	9	1.0	67	
				7.5	S-5	4-5-6 **2.00**	15	1.2	80	
				9.0	S-6	2-3-7 **4.00**	13	1.5	100	
				10.5	S-7	3-4-6 **3.50**	13	1.5	100	
965				12.0	S-8	1-2-3 **1.00**	7	1.5	100	
				13.5	S-9	3-4-5 **1.50**	12	1.5	100	
		CLAY, some Silt, some Sand, soft to stiff, moist, dark gray to gray, alluvium, *+PL, -LL, sand is very fine grain.*		15.0	S-10	1-2-3 **1.00**	7	1.5	100	
				16.5	S-11	1-1-2 **0.50**	4	1.5	100	
		Resume 11/7/2018, W.L.=16.2'.		18.0	S-12	3-3-3 **0.75**	8	1.5	100	
960			a-7-6 / ch	19.5	S-13	1-1-1 **0.50**	3	1.5	100	
				21.0	S-14	1-3-4 **0.50**	9	1.5	100	
				22.5	S-15	1-1-1 **0.25**	3	1.5	100	
		23.0'/El. 953.3		24.0	S-16	1-3-4 **1.00**	9	1.5	100	
		CLAY, some Silt, little Sand, little Gravel, stiff, moist to wet, gray to dark gray, alluvium, *dark blue gray, sand is fine grain, gravel is sandstone fragments, fine carbonaceous rock fragments, some fine river gravels.*		25.5	S-17	1-2-5 **1.00**	9	1.5	100	
955				27.0	S-18	3-3-4 **0.50**	9	1.5	100	
			a-6 / cl	28.5	S-19	4-5-4 **0.75**	12	1.5	100	
		28.5'/El. 947.8		30.0	S-20	1-2-3 **0.25**	7	1.5	100	
		CLAY, some Sand, little Silt, very soft to medium, moist to wet, gray to dark gray, alluvium, *+PL to near LL, sand is very fine grain.*		31.5	S-21	1-3-3 **0.25**	8	1.5	100	
950			a-7-6 / ch	33.0	S-22	WOH-WOH -2 **0.25**	3	1.5	100	
				34.5	S-23	WOH-WOH -WOH **0.25**	0	0.2	13	
				36.0	S-24	WOH-WOH -WOH **0.25**	0	1.5	100	
				37.5	S-25	1-2-2 **0.25**	5	1.5	100	
				39.0	S-26	WOH-3-4 **0.75**	9	1.5	100	
945				40.5	S-27	WOH-WOH -WOH **0.25**	0	1.5	100	
				42.0	S-28	WOH-1-2 **0.25**	4	1.5	100	
				43.5	S-29	WOH-WOR -WOH **0.25**	0	0.8	53	
				45.0	S-30	1-3-3 **0.25**	8	1.5	100	
				46.5	S-31	WOH-WOH -WOH **0.25**	0	1.5	100	
				48.0	S-32	WOH-WOH -1 **0.25**	1	1.5	100	
				49.5	S-33	1-4-5 **1.50**	12	1.5	100	
				51.0	S-34	6-15-12	36	1.5	100	
				51.5	S-35	44-50/.0'	>67	0.5	100	
				53.2	R-1		59%	1.7	100	
				56.2	R-2		37%	2.6	87	
					R-3		68%	4.9	98	

BPCE 967.88

SUBSTRUCTURE UNIT:

ABUTMENT 2 / WINGWALL C

LOG 2 OF 2

BORING NUMBER:	BORING LOCATION	VERTICAL SCALE:	
R-103	STATION: 782+90.0 OFFSET: 73.0 FT. RT.	0 FT. 2.5 FT.	▽ 0 HR.: El. 972.1 ft. - 0.0 hr. ▼ 24 HR.: El. 971.3 ft. - 119.0 hr.

ELEV.	GRAPHIC	MATERIAL DESCRIPTION	AASHTO/ USCS	SAMPLE DEPTH
		CLAY, some Sand, little Silt, very soft to medium, moist to wet, gray to dark gray, alluvium, *+PL to near LL, sand is very fine grain.* 38.5'/El. 937.8	a-7-6 / ch	
940		**CLAY**, some Gravel, little Sand, stiff, wet, gray, alluvium, *+PL, sandstone fragments.* 39.0'/El. 937.3	a-6 / cl	
		CLAY, some Silt, little Sand, very soft to medium, wet, gray to dark gray, alluvium, *+PL to near LL, sand is very fine grain.* 48.5'/El. 927.8	a-7-6 / ch	
935		**CLAY**, some Gravel, little Sand, stiff to hard, moist, gray to blue gray, alluvium, *-PL to +PL, -LL, gravel is fine sandstone fragments, carbonaceous rock fragments..* 51.0'/El. 925.3	a-6 / cl	
		GRAVEL, some Sand, little Clay, very dense, dry, non-plastic, gray, residuum, *Pen = 0.25 at 37.5' to 38.5'.* 51.5'/El. 924.8		
930		**SANDSTONE**, dark blue gray to gray, medium hard, slightly weathered to moderately weathered, thin to moderate bedding, narrow to medium spacing, flat to shallow dip, *Unit RQD = 59%.* 54.2'/El. 922.1		
		CLAY, very soft, dark brown, *Unit RQD = 0%.* 54.9'/El. 921.4		
925		Carbonaceous **SILTSTONE**, black, medium hard, slightly weathered, thin to narrow bedding, narrow to moderate spacing, flat dip, *Unit RQD = 36%.* 56.3'/El. 920.0		
EPTE 923.80		**LIMESTONE**, dark gray to gray, medium hard to hard, slightly weathered to moderately weathered, laminated bedding, laminated to medium spacing, flat to steep dip, *chaotic bedded, some carbonaceous zones, some clay seams. Unit QRD = 69%.* 61.2'/El. 915.1		
920				

SAMPLE NO.	BLOW COUNT / PP/T TSF	N 60 / %RQD	REC (ft.)	REC (%)
S-23	WOH-WOH -WOH **0.25**	0	0.2	13
S-24	WOH-WOH -WOH **0.25**	0	1.5	100
S-25	1-2-2 **0.25**	5	1.5	100
S-26	WOH-3-4 **0.75**	9	1.5	100
S-27	WOH-WOH -WOH **0.25**	0	1.5	100
S-28	WOH-1-2 **0.25**	4	1.5	100
S-29	WOH-WOR -WOH **0.25**	0	0.8	53
S-30	1-3-3 **0.25**	8	1.5	100
S-31	WOH-WOH -WOH **0.25**	0	1.5	100
S-32	WOH-WOH -1 **0.25**	1	1.5	100
S-33	1-4-5 **1.50**	12	1.5	100
S-34	6-15-12	36	1.5	100
S-35	44-50/.0'	>67	0.5	100
R-1		59%	1.7	100
R-2		37%	2.6	87
R-3		68%	4.9	98

◇ RQD % ◇ ⊙ Soil/Rock Rec. % ⊙ (20 40 60 80) ▲ SPT (N_{60}) ▲ (10 20 30 40)

GENERAL NOTES:

THIS SHEET IS INCLUDED FOR THE CONVENIENCE OF THE DEPARTMENT. REFER TO PUBLICATION 408 SECTION 102.05 FOR FURTHER INFORMATION.

FOR ADDITIONAL SOIL AND ROCK DESCRIPTIONS SEE PUBLICATION 222.

THE BORING LOGS AND RELATED INFORMATION DEPICT SUBSURFACE CONDITIONS ONLY AT THE SPECIFIC LOCATIONS AND DATES INDICATED. SUBSURFACE CONDITIONS MAY DIFFER FROM THE CONDITIONS REPORTED AT THE SPECIFIC LOCATIONS. ALSO, THE PASSAGE OF TIME MAY RESULT IN A CHANGE OF CONDITIONS AT THE BORING LOCATIONS.

LEGEND:

PP - POCKET PENETROMETER
T - TORVANE
RQD - ROCK QUALITY DESIGNATION
SPT - STANDARD PENETRATION TEST
BPCE - BOTTOM OF PILE CAP ELEVATION
EPTE - ESTIMATED PILE TIP ELEVATION

▽ - DENOTES 0 HOUR GROUND WATER ELEVATION
▼ - DENOTES 24 HOUR GROUND WATER ELEVATION
( ) - REMARKS

THE CLASSIFICATIONS OF THE MATERIAL ENCOUNTERED HAVE BEEN VERIFIED.

MBM
INITIAL

THE INFORMATION, AS SUBMITTED, ACCURATELY REPRESENTS THE CONDITIONS ENCOUNTERED BY THE TEST BORING PROGRAM, INCLUDING BORING LOGS, EARTH SAMPLES, ROCK CORES, CLASSIFICATION OF MATERIALS, & DEPTH OF BORINGS.

1-4-22
GEOTECHNICAL ENGINEER DATE

THE INFORMATION PROVIDED IS REPRESENTATIVE OF SUBSURFACE CONDITIONS ONLY AT THE LOCATIONS AND DEPTHS WHERE SUCH INFORMATION WAS OBTAINED, AND THERE IS NO EXPRESSED OR IMPLIED AGREEMENT THAT UNIFORMITY OF MATERIALS EXISTS BETWEEN EXPLORED LOCATIONS. (SEE PUBLICATION 408/2020, SECTION 102.05.)

Mark	Description	By	Chk'd.	Recm'd.	Date
	REVISIONS				

S.R. 0051 PREVIOUSLY KNOWN AS L.R. 288

COMMONWEALTH OF PENNSYLVANIA
DEPARTMENT OF TRANSPORTATION

WESTMORELAND COUNTY
S.R. 0070 SECTION E10
SEGMENT 40/41 OFFSET 1725 /1692 (NB/SB)
WHEELING & LAKE ERIE RAILROAD (MP C-17.01)
OVER S.R. 0051 STATION 82+91.42
SINGLE SPAN THROUGH GIRDER BRIDGE
CORE BORING R-103

CERTIFIED CORRECT PLANS
Professional Engineer
Approved by Bureau of Technical Utility Services
PA PUBLIC UTILITY COMMISSION
ATTEST Secretary

COMMONWEALTH OF PENNSYLVANIA REGISTERED PROFESSIONAL MATTHEW BROOKS MORRIS GEOLOGIST PG004584

RECOMMENDED
Roy A. Painter 1/18/2022
DISTRICT GEOTECHNICAL ENGINEER

SHEET 41 OF 44

DES: AGR | DWN: CJP | CHK: MBM

PENNDOT STRUCTURE BORING LOG - PENNDOT.GINT - VERSION 1.2.2.3 8.21.2018.GDT - 3/12/21 10:11 - C:\USERS\PAYEAH\PYCHARM\VE - GANNETT FLEMING INC\DESKTOP\PRE - I-70 & SR51 INTERCHANGE.GPJ

pw:\\gfnet-pw.bentley.com:gfnet-pw-01\Documents\Projects\61636\INPUT\COMP_01\CIVIL\BRDG\W&LE RR BRIDGE\SHT39_CORE BORING R103.dgn
1/4/2022 2:56:11 PM

SUBSTRUCTURE UNIT:
ABUTMENT 1

LOG 1 OF 2

BORING NUMBER:	BORING LOCATION	START: 10/31/2018 9:00 AM	HAMMER: AUTOMATIC
R-104	STATION: 783+20.0 OFFSET: 66.0 FT. LT.	FINISH: 11/01/2018 12:30 PM	EFFICIENCY: 0.8 ERa

DRILLING METHOD AND EQUIPMENT:	SIZE OF CORE:	VERTICAL SCALE:	TOP OF BORING ELEVATION:
DOUBLE TUBE-NQ, AUTOMATIC, CME 45C	2.000 IN.	0 FT. [redacted] 2.5 FT.	974.7 FT.

DRILLING INSPECTOR: JESSE LAPE
DRILLER & DRILLING COMPANY:JIM LANG SR
PENNSYLVANIA DRILLING COMPANY

▽ 0 HR. READING - ELAPSED TIME: El. 971.8 ft. - 0.0 hr.
▼ 24 HR. READING - ELAPSED TIME: El. 966.1 ft. - 96.5 hr.

ELEV.	GRAPHIC	MATERIAL DESCRIPTION	AASHTO/ USCS	SAMPLE DEPTH	SAMPLE NO.	BLOW COUNT ------ PP/T TSF	N 60 / %RQD	REC (ft.)	REC (%)	◇RQD %◇ ⊙Soil/Rock Rec. %⊙ ▲SPT (N.)▲
		TOPSOIL, Organics, very loose, moist. 0.5'/El. 974.2								
		Coarse **SAND**, some Silt, very loose, damp, non-plastic, brown, fill. 1.5'/El. 973.2	a-1-b / sw-	1.5	S-1	1-1-1	3	1.1	73	
		GRAVEL, some Silt, some Sand, medium dense, dry, dark gray, fill, *carbonaceous sandy shale fragments.* 3.0'/El. 971.7	a-1-b / gm	3.0	S-2	2-6-5	15	1.5	100	
▽ 970		**CLAY**, some Silt, some Sand, trace Gravel, stiff to very stiff, moist, dark brown gray to mottled gray, alluvium, *brown, orange brown, black, light gray, +PL to near PL, -LL, sand is very fine grain, gravel is shale and sandstone fragments.*		4.5	S-3	2-4-4 **2.00**	11	1.2	80	
BPCE 967.08				6.0	S-4	3-4-3 **1.50**	9	1.5	100	
▼			a-6 / cl	7.5	S-5	4-4-6 **1.50**	13	1.5	100	
965				9.0	S-6	3-4-6 **3.00**	13	1.5	100	
		10.5'/El. 964.2			S-7	4-6-6 **2.00**	16	1.5	100	
		CLAY, some Silt, little Sand, trace Gravel, soft to stiff, moist, brown and gray brown, alluvium, *tan brown, near PL to +PL, -LL, sand is very fine grain, gravel is sandstone fragments.*		10.5	S-8	1-2-2 **0.50**	5	1.5	100	
			a-6 / cl	12.0	S-9	2-3-4 **0.50**	9	1.5	100	
		15.0'/El. 959.7		13.5	S-10	2-4-4 **1.00**	11	1.5	100	
960		**CLAY**, some Silt, some Sand, trace Gravel, soft to medium, moist to wet, dark blue gray to dark gray, alluvium, *+PL, -LL, sand is very fine grain, gravel is sandstone fragments.*		15.0	S-11	WOH-2-2 **0.25**	5	1.5	100	
				16.5	S-12	1-2-3 **0.25**	7	1.5	100	
		Resume 11/01/2018, W.L.=18'.	a-7-6 / ch	18.0	S-13	WOH-1-1 **0.25**	3	1.5	100	
955				19.5	S-14	1-2-3 **0.25**	7	1.5	100	
		22.0'/El. 952.7			S-15	WOH-WOH -3 **0.25**	4	1.5	100	
		CLAY, some Silt, some Sand, stiff to very stiff, moist, gray to dark gray, alluvium, *-PL to +PL, sand is very fine grain.*		22.5	S-16	3-4-4 **0.75**	11	1.5	100	
		More silt from 24' to 26'.	a-6 / cl	24.0	S-17	3-7-8 **1.50**	20	1.5	100	
950		26.0'/El. 948.7		25.5	S-18	3-12-44	75	1.5	100	
		SAND and **GRAVEL**, some Clay, medium dense to very dense, damp, non-plastic, dark blue gray and gray, alluvium, *brown, black, fines are -PL, sand is fine to medium, gravel is sandstone, river gravels and carbonaceous rock fragments.*		27.0	S-19	30-41-50/.3'	121	1.3	100	
			a-2-6 / sc	28.3	A-1					
		Free water in S-20 but soil is damp. 29.8'/El. 944.9		28.5	S-20	13-12-8	27	1.5	100	
945		**CLAY**, some Silt, some Sand, some Gravel, soft to stiff, wet, dark gray to gray, alluvium, *+PL, -LL, sand is very fine grain, gravel is coarse sandstone fragments with fine carbonaceous rock fragments.*		30.0	S-21	1-2-2 **0.25**	5	1.3	87	
				31.5	S-22	1-1-1 **0.25**	3	1.4	93	
				33.0						

SUBSTRUCTURE UNIT:
ABUTMENT 1

LOG 2 OF 2

BORING NUMBER:	BORING LOCATION	VERTICAL SCALE:	
R-104	STATION: 783+20.0 OFFSET: 66.0 FT. LT.	0 FT. [redacted] 2.5 FT.	▽ 0 HR.: El. 971.8 ft. - 0.0 hr. ▼ 24 HR.: El. 966.1 ft. - 96.5 hr.

ELEV.	GRAPHIC	MATERIAL DESCRIPTION	AASHTO/ USCS	SAMPLE DEPTH	SAMPLE NO.	BLOW COUNT PP/T TSF	N 60 / %RQD	REC (ft.)	REC (%)	◇RQD %◇ ⊙Soil/Rock Rec. %⊙ ▲SPT (N.)▲
		CLAY, some Silt, some Sand, some Gravel, soft to stiff, wet, dark gray to gray, alluvium, *+PL, -LL, sand is very fine grain, gravel is coarse sandstone fragments with fine carbonaceous rock fragments.*	a-7-6 / ch	34.5	S-23	2-3-3 **0.50**	8	1.5	100	
		Less gravel from 32.0' to 36.0'.		36.0	S-24	1-2-3 **0.75**	7	1.5	100	
		38.5'/El. 936.2		37.5	S-25	2-3-4 **1.50**	9	1.5	100	
		GRAVEL, some Silt, some Sand, some Clay, very dense, moist to wet, non-plastic, gray, residuum, *fines are -PL to +PL, -LL.* 40.4'/El. 934.3		39.0	S-26	9-14-28 **1.50**	56	1.5	100	
		SILTSTONE, gray to dark gray, soft to medium hard, weathered, narrow to close spacing, *Unit RQD = 0%.* 41.2'/El. 933.5		40.4	S-27	5-36-50/.4'	115	1.4	100	
EPTE 933.30		Carbonaceous **LIMESTONE**, gray to dark gray, medium hard to hard, weathered, laminated to moderate spacing, flat to sheer dip, *Unit RQD = 33%.* 42.4'/El. 932.3		42.4	R-1		20%	2.0	100	
		CLAYSTONE, gray, soft, weathered, *Unit RQD = 0%.* 42.6'/El. 932.1								
		COAL, black, soft to medium hard, narrow to moderate spacing, flat to sheer dip, *some low grade coal and carbonaceous shale, Unit RQD = 0%.* 45.2'/El. 929.5		46.8	R-2		9%	3.4	77	
		SANDSTONE, dark, fine grained, medium hard, slightly weathered to moderately weathered, thin to moderate bedding, laminated to moderate spacing, flat to sheer dip, some clay seams, Unit RQD = 27%. 50.7'/El. 924.0		50.8	R-3		28%	3.7	92	
		Carbonaceous **SILTSTONE**, dark gray to black, medium hard to hard, slightly weathered, narrow to medium spacing, flat dip, *Siltstone is sandy, Unit RQD = 61%.* 54.0'/El. 920.7			R-4		76%	5.0	100	
		Carbonaceous **LIMESTONE**, dark gray to black, hard, slightly weathered, laminated bedding, moderate to medium spacing, flat dip, Unit RQD = 100%. 55.8'/El. 918.9								

NOTE: NEVER LOST DRILL WATER

GENERAL NOTES:

THIS SHEET IS INCLUDED FOR THE CONVENIENCE OF THE DEPARTMENT. REFER TO PUBLICATION 408 SECTION 102.05 FOR FURTHER INFORMATION.

FOR ADDITIONAL SOIL AND ROCK DESCRIPTIONS SEE PUBLICATION 222.

THE BORING LOGS AND RELATED INFORMATION DEPICT SUBSURFACE CONDITIONS ONLY AT THE SPECIFIC LOCATIONS AND DATES INDICATED. SUBSURFACE CONDITIONS MAY DIFFER FROM THE CONDITIONS REPORTED AT THE SPECIFIC LOCATIONS. ALSO, THE PASSAGE OF TIME MAY RESULT IN A CHANGE OF CONDITIONS AT THE BORING LOCATIONS.

LEGEND:

PP - POCKET PENETROMETER
T - TORVANE
RQD - ROCK QUALITY DESIGNATION
SPT - STANDARD PENETRATION TEST
BPCE - BOTTOM OF PILE CAP ELEVATION
EPTE - ESTIMATED PILE TIP ELEVATION

▽ - DENOTES 0 HOUR GROUND WATER ELEVATION
▼ - DENOTES 24 HOUR GROUND WATER ELEVATION
{} - REMARKS

THE CLASSIFICATIONS OF THE MATERIAL ENCOUNTERED HAVE BEEN VERIFIED.

MBM
INITIAL

THE INFORMATION, AS SUBMITTED, ACCURATELY REPRESENTS THE CONDITIONS ENCOUNTERED BY THE TEST BORING PROGRAM, INCLUDING BORING LOGS, EARTH SAMPLES, ROCK CORES, CLASSIFICATION OF MATERIALS, & DEPTH OF BORINGS.

MATTHEW B. MORRIS 1-4-22
GEOTECHNICAL ENGINEER DATE

THE INFORMATION PROVIDED IS REPRESENTATIVE OF SUBSURFACE CONDITIONS ONLY AT THE LOCATIONS AND DEPTHS WHERE SUCH INFORMATION WAS OBTAINED, AND THERE IS NO EXPRESSED OR IMPLIED AGREEMENT THAT UNIFORMITY OF MATERIALS EXISTS BETWEEN EXPLORED LOCATIONS.
(SEE PUBLICATION 408/2020, SECTION 102.05.)

Mark	Description	By	Chk'd.	Recm'd.	Date
	REVISIONS				

S.R. 0051 PREVIOUSLY KNOWN AS L.R. 288

COMMONWEALTH OF PENNSYLVANIA
DEPARTMENT OF TRANSPORTATION

WESTMORELAND COUNTY
S.R. 0070 SECTION E10
SEGMENT 40/41 OFFSET 1725 /1692 (NB/SB)
WHEELING & LAKE ERIE RAILROAD (MP C-17.01)
OVER S.R. 0051 STATION 82+91.42
SINGLE SPAN THROUGH GIRDER BRIDGE
CORE BORING R-104

CERTIFIED CORRECT PLANS
Darrell R. Hilbish
Professional Engineer
Approved by Bureau of Technical Utility Services
PA PUBLIC UTILITY COMMISSION
ATTEST Secretary

COMMONWEALTH OF PENNSYLVANIA REGISTERED PROFESSIONAL MATTHEW BROOKS MORRIS GEOLOGIST PG004584

RECOMMENDED
Roy A. Prantz 1/18/2022
DISTRICT GEOTECHNICAL ENGINEER

SHEET 42 OF 44

DES: AGR | DWN: CJP | CHK: MBM

pw:\\gfnet-pw.bentley.com:gfnet-pw-01\Documents\Projects\61636\INPUT\COMP_01\CIVIL\BRDG\W&LE RR BRIDGE\SHT40_CORE BORING R104.dgn
1/4/2022 2:56:13 PM

LABORATORY TEST SUMMARY - ROCK CORE

BORING NUMBER	STATION & OFFSET	SAMPLE #	TEST DEPTH (FT.)	TEST	STRENGTH	JAR SLAKE TEST PERFORMED?	SLAKE DURABILITY INDEX & TYPE	ROCK RECOVERY %	RQD %	BEDROCK LITHOLOGY	STRATIGRAPHIC UNIT
SB-1	82+51.5 86.4 ft. RT.	R-2	71.0 to 71.5	UNCONFINED COMPRESSIVE TEST	8957.0 PSI / 644.9 TSF	NO		66	34	LIMESTONE	
SB-2	82+24.5 63.2 ft. RT.	R-4	73.0 to 73.7	UNCONFINED COMPRESSIVE TEST	9342.0 PSI / 672.6 TSF	NO		100	73	LIMESTONE	
SB-3	82+51.5 133 ft. RT.	R-2	73.1 to 73.8	UNCONFINED COMPRESSIVE TEST	10499.0 PSI / 755.9 TSF	NO		80	35	LIMESTONE	
SB-5	82+90.0 53 ft. LT.	R-2	65.5 to 66.1	UNCONFINED COMPRESSIVE TEST	15122.0 PSI / 1,088.8 TSF	NO		97	50	SILTSTONE	
SB-6A	83+40.7 60.5 ft. LT.	R-1	40.2 to 40.7	UNCONFINED COMPRESSIVE TEST	7527.0 PSI / 541.9 TSF	NO		43	18	LIMESTONE	

LABORATORY TEST SUMMARY - ELECTROCHEMICAL

BORING NUMBER	STATION & OFFSET	SAMPLE #	TEST DEPTH (FT.)	SAMPLE SOURCE	pH	MINIMUM RESISTIVITY (ohm-cm)	CHLORIDE CONTENT (ppm)	SULFATE CONTENT (ppm)	HIGH ORGANIC CONTENT?	CORROSIVE FOR CONCRETE?	CORROSIVE FOR STEEL?
SB-1A	82+51.5 84 ft. RT.	BS-1	30.0 to 34.5	GROUNDWATER SOIL	7.9	4,400	10	101	No	No No	No No
SB-6A	83+40.7 60.5 ft. LT.	ST-1	11.0 to 13.0	GROUNDWATER SOIL	6.2	7,400	22	165	No	No No	No No

Potentially Corrosive Environments per DM-4

Soil: Resistivity < 2,000 ohm-cm
2,000 ohm-cm < Resistivity < 5000 ohm-cm with sulfate concentration > 200 ppm
2,000 ohm-cm < Resistivity < 5000 ohm-cm with chloride concentration > 100 ppm
pH < 5.5
5.5 < pH <8.5 in soils with high organic content
Sulfate >1,000 ppm

Water: Chloride Content > 1000 ppm
Sulfate Content > 150 ppm
High Organic Content
pH < 5.5

Corrosive for Concrete: ph<4 or Sulfates > 1000ppm

Refer to DM-4 for landfill and cinder fills, soils subject to mine or industrial drainage, and mixtures of high resistivity and low resistivity high alkaline soils

GENERAL NOTES:

THIS SHEET IS INCLUDED FOR THE CONVENIENCE OF THE DEPARTMENT. REFER TO PUBLICATION 408 SECTION 102.05 FOR FURTHER INFORMATION.

FOR ADDITIONAL SOIL AND ROCK DESCRIPTIONS SEE PUBLICATION 222.

THE BORING LOGS AND RELATED INFORMATION DEPICT SUBSURFACE CONDITIONS ONLY AT THE SPECIFIC LOCATIONS AND DATES INDICATED. SUBSURFACE CONDITIONS MAY DIFFER FROM THE CONDITIONS REPORTED AT THE SPECIFIC LOCATIONS. ALSO, THE PASSAGE OF TIME MAY RESULT IN A CHANGE OF CONDITIONS AT THE BORING LOCATIONS.

LEGEND:

S.G. - SPECIFIC GRAVITY
P.I. - PLASTICITY INDEX
C - COHESION
C' - EFFECTIVE COHESION
Ø - FRICTION ANGLE
Ø' - EFFECTIVE FRICTION ANGLE
RQD - ROCK QUALITY DESIGNATION

THE CLASSIFICATIONS OF THE MATERIAL ENCOUNTERED HAVE BEEN VERIFIED.

MBM
INITIAL

THE INFORMATION, AS SUBMITTED, ACCURATELY REPRESENTS THE CONDITIONS ENCOUNTERED BY THE TEST BORING PROGRAM, INCLUDING BORING LOGS, EARTH SAMPLES, ROCK CORES, CLASSIFICATION OF MATERIALS, & DEPTH OF BORINGS.

Matthew B. Morris 1-4-22
GEOTECHNICAL ENGINEER DATE

Mark	Description	By	Chk'd.	Recm'd.	Date
	REVISIONS				

S.R. 0051 PREVIOUSLY KNOWN AS L.R. 288

CERTIFIED CORRECT PLANS
David R. Hilfiker
Professional Engineer
Approved by Bureau of Technical Utility Services
PA PUBLIC UTILITY COMMISSION
ATTEST Rosemary Chiavetta
Secretary

COMMONWEALTH OF PENNSYLVANIA
REGISTERED PROFESSIONAL
MATTHEW BROOKS MORRIS
GEOLOGIST
PG004584
PENNSYLVANIA

COMMONWEALTH OF PENNSYLVANIA
DEPARTMENT OF TRANSPORTATION

WESTMORELAND COUNTY
S.R. 0070 SECTION E10
SEGMENT 40/41 OFFSET 1725 /1692 (NB/SB)
WHEELING & LAKE ERIE RAILROAD (MP C-17.01)
OVER S.R. 0051 STATION 82+91.42
SINGLE SPAN THROUGH GIRDER BRIDGE
LABORATORY TEST SUMMARY 1

RECOMMENDED
Roy A. Painter 1/18/2022
DISTRICT GEOTECHNICAL ENGINEER

SHEET 43 OF 44

DES: AGR | DWN: CJP | CHK: MBM

pw:\\gfnet-pw.bentley.com:gfnet-pw-01\Documents\Projects\61636\INPUT\COMP_01\CIVIL\BRDG\W&LE RR BRIDGE\SHT41_LABORATORY TEST SUMMARY 1.dgn
1/14/2022 2:56:16 PM

LABORATORY TEST SUMMARY - SOILS

					% GRAIN SIZE DISTRIBUTION (AASHTO)							CLASSIFICATION			PLASTICITY PARAMETERS			SHEAR STRENGTH				
BORING NUMBER	STATION & OFFSET	SAMPLE #	TEST DEPTH (FT.)	NATURAL MOISTURE %	GRAVEL %	SAND %	COARSE SAND %	FINE SAND %	FINES %	SILT %	CLAY %	AASHTO	USCS	S.G.	LIQUID LIMIT	PLASTIC LIMIT	P. I.	C (TSF)	ϕ (DEG.)	C' (TSF)	ϕ' (DEG)	TEST METHOD
SB-1A	82+51.5 84 ft. RT.	BS-1	30.0 to 34.5	31.1	0.0	10.2	9.7	0.5	89.8	29.3	60.5	A-6	CL		35	23	12					
SB-1A	82+51.5 84 ft. RT.	ST-1	34.5 to 36.5	33.5	0.0	5.3	4.9	0.4	94.7	27.2	67.5	A-7-6	CL		42	16	26					TRIAXIAL-UU
SB-2	82+24.5 63.2 ft. RT.	S-8 to 9	10.5 to 13.5	26.8	6.1	26.3	13.4	12.9	67.6	33.2	34.4	A-6	CL		36	22	14					
SB-2	82+24.5 63.2 ft. RT.	S-25 to 26	36.0 to 39.0	33.1	0.2	6.9	6.5	0.4	92.9	24.1	68.8	A-7-6	CL		41	23	18					
SB-2A	82+24.5 63.2 ft. RT.	ST-1	54.0 to 56.0	29.4	0.3	22.4	4.3	17.1	77.3	56.1	21.2	A-4	CL-ML		29	22	7					
SB-3	82+51.5 133 ft. RT.	S-12 to 19	16.5 to 28.5	25.8	0.7	13.3	2.9	11.4	85.0	41.3	43.7	A-6	CL		37	23	14					
SB-3	82+51.5 133 ft. RT.	S-24	34.5 to 36.0	35.4																		
SB-3	82+51.5 133 ft. RT.	S-26	37.5 to 39.0	24.9	0.0	4.4	0.7	3.7	95.6	50.0	45.6	A-6	CL		32	21	11					
SB-3	82+51.5 133 ft. RT.	S-28	40.5 to 42.0	21.3																		
SB-3	82+51.5 133 ft. RT.	S-39 to 40	57.0 to 60.0	34.1	0.0	3.8	3.0	0.8	96.2	37.3	58.9	A-6	CL		37	24	13					
SB-3	82+51.5 133 ft. RT.	S-43 to 44	63.0 to 66.0	24.9	0.1	18.4	10.5	7.9	81.5	36.4	45.1	A-6	CL		33	21	12					
SB-4	82+88.1 99.5 ft. LT.	S-17	24.0 to 25.5	22.1																		
SB-4	82+88.1 99.5 ft. LT.	S-21	30.0 to 31.5	26.3																		
SB-4	82+88.1 99.5 ft. LT.	S-22 to 27	31.5 to 40.5	20.2	8.9	64.0	19.5	44.5	27.1	20.1	7.0	A-2-4	SM									
SB-5	82+90.0 53 ft. LT.	S-30 to 33	43.5 to 49.5	25.4	0.5	27.2	5.4	21.8	72.3	44.0	28.3	A-4	ML		32	24	8					
SB-5A	82+90.0 53 ft. LT.	ST-1	33.0 to 35.0	22.4	3.4	22.0	9.6	12.4	74.6	37.8	36.8	A-4	CL		30	21	9	0.420	11.5	0.340	22.9	TRIAXIAL-CU
SB-6	83+40.7 56.5 ft. LT.	S-11 to 14	15.0 to 21.0	22.2	3.2	59.8	9.5	50.3	37.0	27.0	10.0	A-4	SM									
SB-6A	83+40.7 60.5 ft. LT.	ST-1	11.0 to 13.0	29.7	0.0	13.4	4.3	9.1	86.6	41.6	45.0	A-6	CL		33	22	11	0.370	11.1	0.150	25.2	TRIAXIAL-CU

GENERAL NOTES:

THIS SHEET IS INCLUDED FOR THE CONVENIENCE OF THE DEPARTMENT. REFER TO PUBLICATION 408 SECTION 102.05 FOR FURTHER INFORMATION.

FOR ADDITIONAL SOIL AND ROCK DESCRIPTIONS SEE PUBLICATION 222.

THE BORING LOGS AND RELATED INFORMATION DEPICT SUBSURFACE CONDITIONS ONLY AT THE SPECIFIC LOCATIONS AND DATES INDICATED. SUBSURFACE CONDITIONS MAY DIFFER FROM THE CONDITIONS REPORTED AT THE SPECIFIC LOCATIONS. ALSO, THE PASSAGE OF TIME MAY RESULT IN A CHANGE OF CONDITIONS AT THE BORING LOCATIONS.

LEGEND:

S.G. - SPECIFIC GRAVITY
P.I. - PLASTICITY INDEX
C - COHESION
C' - EFFECTIVE COHESION
ϕ - FRICTION ANGLE
ϕ' - EFFECTIVE FRICTION ANGLE
RQD - ROCK QUALITY DESIGNATION

THE CLASSIFICATIONS OF THE MATERIAL ENCOUNTERED HAVE BEEN VERIFIED.

MBM
INITIAL

THE INFORMATION, AS SUBMITTED, ACCURATELY REPRESENTS THE CONDITIONS ENCOUNTERED BY THE TEST BORING PROGRAM, INCLUDING BORING LOGS, EARTH SAMPLES, ROCK CORES, CLASSIFICATION OF MATERIALS, & DEPTH OF BORINGS.

Matthew B. Morris 1-4-22
GEOTECHNICAL ENGINEER DATE

Mark	Description	By	Chk'd.	Recm'd.	Date
REVISIONS					

S.R. 0051 PREVIOUSLY KNOWN AS L.R. 288

CERTIFIED CORRECT PLANS
Donald R Hallauer
Professional Engineer
Approved by Bureau of Technical Utility Services
PA PUBLIC UTILITY COMMISSION
ATTEST Secretary

COMMONWEALTH OF PENNSYLVANIA REGISTERED PROFESSIONAL MATTHEW BROOKS MORRIS GEOLOGIST PG004584 PENNSYLVANIA

COMMONWEALTH OF PENNSYLVANIA
DEPARTMENT OF TRANSPORTATION

WESTMORELAND COUNTY
S.R. 0070 SECTION E10
SEGMENT 40/41 OFFSET 1725 /1692 (NB/SB)
WHEELING & LAKE ERIE RAILROAD (MP C-17.01)
OVER S.R. 0051 STATION 82+91.42
SINGLE SPAN THROUGH GIRDER BRIDGE
LABORATORY TEST SUMMARY 2

RECOMMENDED
Greg A. Paintz 1/18/2022
DISTRICT GEOTECHNICAL ENGINEER

SHEET 44 OF 44

DES: AGR | DWN: CJP | CHK: MBM

pw:\\gfnet-pw.bentley.com:gfnet-pw-01\Documents\Projects\61636\INPUT\COMP_01\CIVIL\BRDG\W&LE RR BRIDGE\SHT42_LABORATORY TEST SUMMARY 2.dgn
1/24/2022 2:56:21 PM

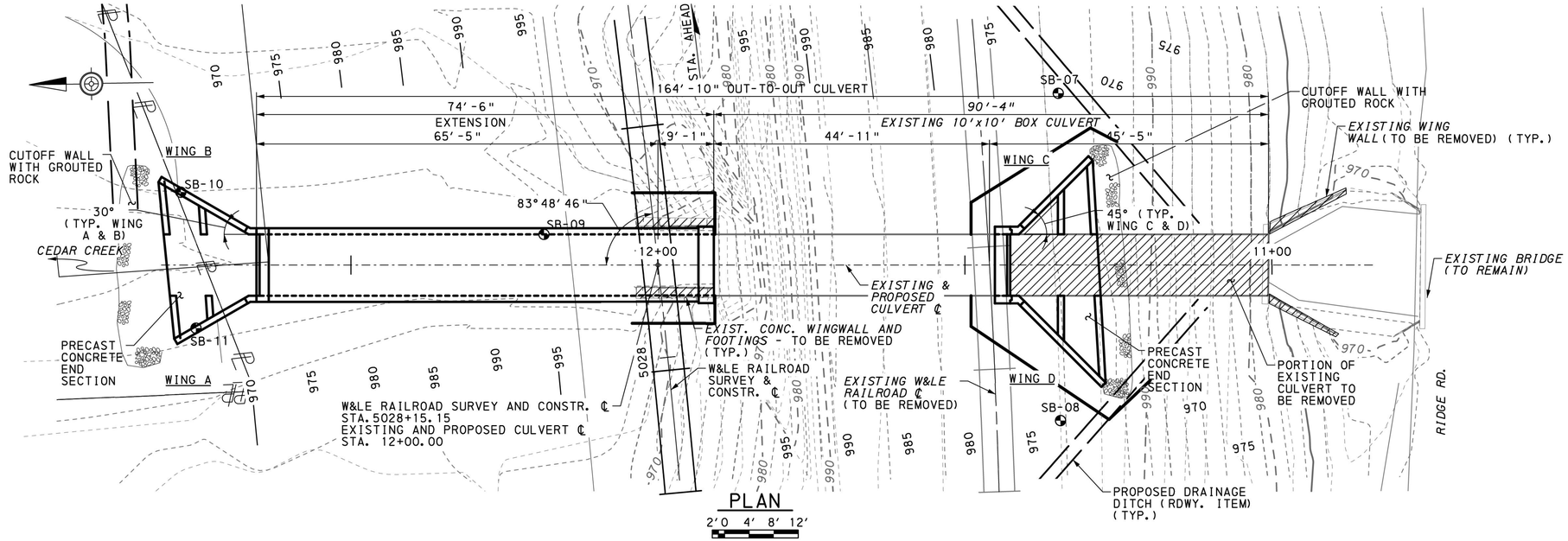

PLAN

2'0 4' 8' 12'

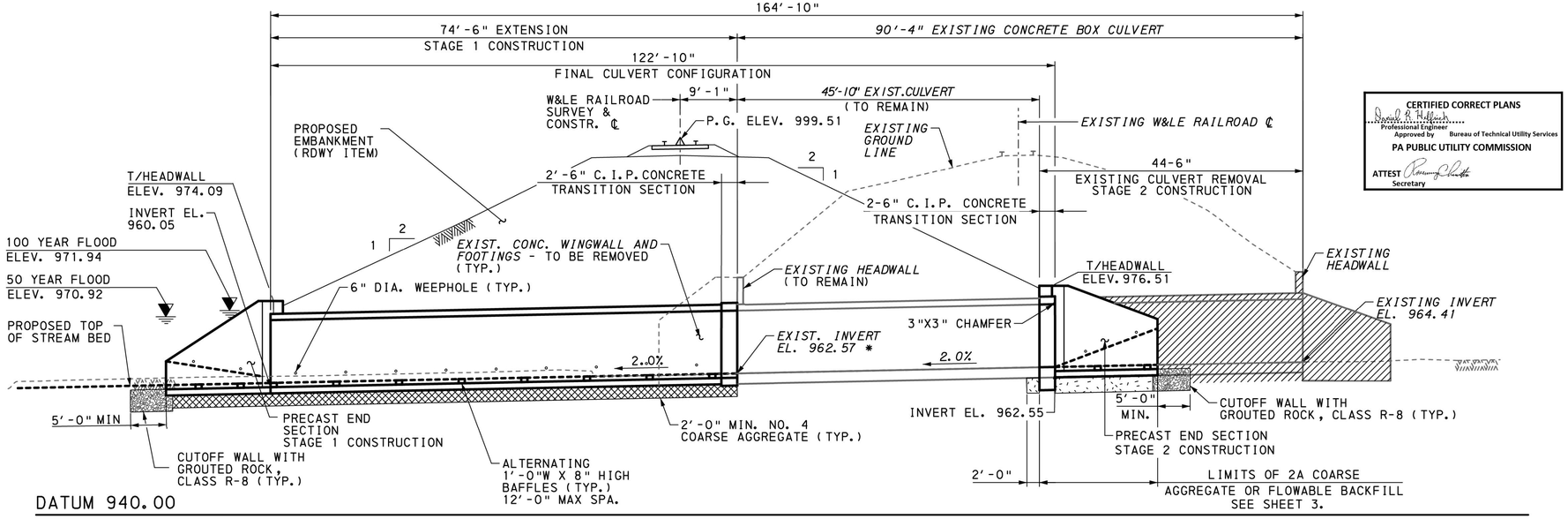

DATUM 940.00

ELEVATION

2'0 4' 8' 12'

LEGEND:

- NO. 2A COARSE AGGREGATE OR FLOWABLE BACKFILL
- PORTION OF EXISTING CULVERT TO BE REMOVED
- CLASS R-8 GROUTED ROCK
- NO. 4 COARSE AGGREGATE
- STRUCTURE BORINGS
- APPROX. LIMITS OF TEMPORARY EXCAVATION AND SUPPORT SYSTEM
- * EXISTING ELEV. SHOWN IS APPROXIMATE. MATCH EXISTING
- —975— EXISTING CONTOURS
- —975— PROPOSED CONTOURS

HYDRAULIC DATA

DRAINAGE AREA = 1.33 SQ. MI.
50 YEAR FLOOD DESIGN:
DISCHARGE = 567 CFS
EXISTING W.S. ELEV. = 971.59
PROPOSED W.S. ELEV. = 970.92
VELOCITY = 2.28 FPS
100 YEAR FLOOD DESIGN:
DISCHARGE = 687 CFS
EXISTING W.S. ELEV. = 972.58
PROPOSED W.S. ELEV. = 971.94
VELOCITY 2.33 FPS
FLOOD OF RECORD: UNKNOWN

DES: JDM | DWN: CMC | CHK: CTV

COMMONWEALTH OF PENNSYLVANIA REGISTERED PROFESSIONAL
JONATHAN D. McHUGH
ENGINEER NO PE062295

1-4-22

PREPARED BY:
GANNETT FLEMING, INC.
FOSTER PLAZA 8, SUITE 400
730 HOLIDAY DRIVE
PITTSBURGH, PA 15220

CERTIFIED CORRECT PLANS
Professional Engineer
Approved by Bureau of Technical Utility Services
PA PUBLIC UTILITY COMMISSION
ATTEST Secretary

SUPPLEMENTAL DRAWINGS		
DESCRIPTION	DWG. NO.	APP. DATE
WALL CONSTR. & EXP. JOINT DETAILS	BC-735M	9/30/16
REINFORCEMENT BAR FABRICATION DETAILS	BC-736M	1/31/19
REINFORCED CONCRETE REPAIR	BC-783M	1/31/19
TYPICAL WATERPROOFING AND EXPANSION DETAILS	BC-788M	1/31/19
MECHANICAL CONNECTION DETAILS	BC-798M	1/31/19
CLASSIFICATION OF EARTHWORK FOR STRUCTURES	RC-11M	6/1/10
BACKFILL AT STRUCTURES	RC-12M	2/8/19

INDEX OF DRAWINGS

SHEET NO.	TITLE
1	GENERAL PLAN & ELEVATION
2	GENERAL NOTES & QUANTITIES
3	STAKE-OUT PLAN & TYPICAL SECTION
4	CONSTRUCTION SEQUENCE (1 OF 2)
5	CONSTRUCTION SEQUENCE (2 OF 2)
6	PRECAST BOX DETAILS (1 OF 2)
7	PRECAST BOX DETAILS (2 OF 2)
8	CIP TRANSITION DETAILS - UPSTREAM
9	CIP TRANSITION DETAILS - DOWNSTREAM
10	PRECAST INLET DETAILS
11	PRECAST OUTLET DETAILS
12	PRESERVATION DETAILS
13	REINFORCEMENT BAR SCHEDULE
14	BORING LOCATION PLAN
15-17	STRUCTURE BORINGS
18	LABORATORY TEST SUMMARY

W&LE HORIZONTAL CURVE DATA

PI STA.	5023+98.78	X_c	= 154.95′
Δ	= 35°31′09.09" LT.	Y_c	= 2.79′
Δ_c	= 29°19′18.52"	LT	= 103.35′
D_c	= 3°59′53.92"	ST	= 51.68′
R_c	= 1433.00′	LC	= 154.98′
L_c	= 733.36′	T.S.	STA. 5018+62.09
Θ_s	= 3°05′55.28"	S.C.	STA. 5020+17.09
L_s	= 155.00′	C.S.	STA. 5027+50.45
T_s	= 536.69′	S.T.	STA. 5029+05.45
E_s	= 72.44′	S.E.	= 1"
K	= 77.49′		
P	= 0.70′		

W&LE VERTICAL CURVE DATA

P.V.T. STA. 5029+95
EL. = 999.51
V.C. = 310.00′
M.O. = -0.35′

0.00% -0.90%

STRUCTURE BORINGS

BORING NUMBER	W. & L.E. RR STATION	OFFSET
SB-07	5028+36.42	67.92 RT
SB-08	5027+83.33	62.73 RT
SB-09	5028+22.00	17.91 LT
SB-10	5028+34.78	75.94 LT
SB-11	5028+12.50	75.94 LT

NOTES:

1. FOR TYPICAL SECTION, SEE SHEET 3.

Mark	Description	By	Chk'd.	Recm'd.	Date
REVISIONS					

COMMONWEALTH OF PENNSYLVANIA
DEPARTMENT OF TRANSPORTATION

WESTMORELAND COUNTY
S.R. 0070 SECTION E10
WHEELING & LAKE ERIE RAILROAD
STATION 5028+15.15 (MP C-17.01)
OVER CEDAR CREEK
PRECAST CONCRETE BOX CULVERT EXTENSION
GENERAL PLAN & ELEVATION

RECOMMENDED February 3rd, 2022
DISTRICT BRIDGE ENGINEER

SHEET 1 OF 18
+SUPPLEMENTAL DRAWINGS

pw:\\gfnet-pw.bentley.com:gfnet-pw-01\Documents\Projects\61636\INPUT\COMP_01\CIVIL\BRDG\W&LE RR CULVERT\FINAL\SHT_01_GPE.dgn
1/4/2022 2:40:21 PM

GENERAL NOTES

1. PROVIDE MATERIALS AND PERFORM WORK IN ACCORDANCE PENNSYLVANIA DEPARTMENT OF TRANSPORTATION PUBLICATION 408/2020 SPECIFICATIONS (INCLUDING SUPPLEMENTS), AND CONTRACT SPECIAL PROVISIONS.

2. DESIGN SPECIFICATIONS:
   - A.R.E.M.A. MANUAL FOR RAILWAY ENGINEERING, 2020 AS SUPPLEMENTED BY NORFOLK SOUTHERN PUBLIC PROJECTS MANUAL, 2015.
   - THE DESIGN IS IN ACCORDANCE WITH THE LRFD METHOD (LOAD AND RESISTANCE FACTOR DESIGN).

3. DESIGN LIVE LOADS:
   - COOPER E-80 OR ALTERNATIVE LIVE LOAD WITH DIESEL LOCOMOTIVE IMPACT.
   - LIVE LOAD DISTRIBUTION TO THE BOX CULVERT THROUGH EARTH FILL IS BASED UPON A.R.E.M.A. CHAPTER 8.
   - DESIGN SPEED: 40 MPH (FRA CLASS 3 TRACK)

4. DESIGN DEAD LOADS:
   - DEAD LOAD INCLUDES 25.7' OF COVER ON BOX CULVERT.

5. GENERAL

   PERFORM CONCRETE REPAIRS TO EXISTING CULVERT (TO REMAIN) IN ACCORDANCE WITH BC-783M AND AS DIRECTED.

   CONSTRUCTION DETAILS OTHER THAN THOSE SHOWN WILL CONFORM TO THE PENNSYLVANIA DEPARTMENT OF TRANSPORTATION, PUB. 219M, STANDARD BRIDGE CONSTRUCTION (BC-700M) SERIES DRAWINGS.

   MINIMUM SLAB AND WALL THICKNESS REQUIRED ARE AS SHOWN. IF THE ACTUAL DESIGN THICKNESSES DIFFER FROM THE MINIMUMS, ADJUST THE OUT-OUT DIMENSIONS SHOWN ON THESE DRAWINGS NECESSARY. MAINTAIN THE INSIDE BOX DIMENSIONS IN ANY CASE.

   USE EPOXY BONDING COMPOUND WHEREVER CAST-IN-PLACE CEMENT CONCRETE COMES IN CONTACT WITH PRECAST OR EXISTING CEMENT CONCRETE. USE TYPE 2, GRADE 2, EPOXY BONDING COMPOUND AS DESCRIBED IN ASTM-C881-90 (INCIDENTAL TO CULVERT LUMP SUM).

   PROVIDE 2-INCH CONCRETE COVER ON REINFORCEMENT BARS, EXCEPT AS NOTED.

   USE 4000 PSI CEMENT CONCRETE IN CAST-IN-PLACE HEADWALLS, CULVERT TRANSITION SECTIONS, CAST-IN-PLACE CONCRETE WEDGE TRANSITIONS AND BAFFLES.

   USE 5000 PSI CEMENT CONCRETE IN PRECAST CONCRETE ELEMENTS.

   RAKE FINISH ALL HORIZONTAL CONSTRUCTION JOINTS, EXCEPT AS INDICATED.

   CHAMFER EXPOSED CONCRETE EDGES 1 INCH BY 1 INCH, EXCEPT AS NOTED.

   ALL DIMENSIONS SHOWN ARE HORIZONTAL, EXCEPT AS NOTED.

   A HIGHER CLASS CONCRETE MAY BE SUBSTITUTED FOR A LOWER CLASS CONCRETE AT NO ADDITIONAL COST TO THE DEPARTMENT, IF APPROVED BY THE DISTRICT BRIDGE ENGINEER.

   THE MINIMUM CEMENT CONTENT FOR CAST-IN-PLACE CONCRETE SHALL CONTAIN A MINIMUM OF 6.5 BAGS OF CEMENT PER CUBIC YARD. FLYASH AND OTHER ADMIXTURES (IF APPROVED BY WHEELING AND LAKE ERIE RAILROAD) SHALL BE IN ADDITION TO, AND NOT IN LIEU OF THE CEMENT CONCRETE.

   PLACE END SUPPORT BLOCKS (CUTOFF WALLS) PRIOR TO PLACING NO. 4 COARSE AGGREGATE, USE TYPE II SULFATE RESISTANT CEMENT CONCRETE IN ALL CAST-IN-PLACE AND PRECAST CONCRETE FOR THE STRUCTURES.

   PROVIDE MINIMUM SPLICE AND EMBEDMENT LENGTHS IN ACCORDANCE WITH STANDARD DRAWING BC-736M, UNLESS OTHERWISE INDICATED.

   PROVIDE GRADE 60 REINFORCING STEEL BARS THAT MEET THE REQUIREMENTS OF ASTM A615/A615M, A996/A996M, OR A706/A706M. DO NOT WELD GRADE 60 REINFORCING STEEL BARS UNLESS SPECIFIED. GRADE 40 REINFORCING STEEL BARS MAY BE SUBSTITUTED WITH A PROPORTIONAL INCREASE IN CROSS-SECTIONAL AREA, IF APPROVED BY THE CHIEF BRIDGE ENGINEER. DO NOT USE RAIL STEEL A996/A996M REINFORCEMENT BARS WHERE BENDING OR WELDING OF THE REINFORCEMENT BARS IS INDICATED.

   EPOXY COAT ALL REINFORCEMENT BARS, UNLESS NOTED.

   WELDING OF REINFORCEMENT BARS DURING FABRICATION OR CONSTRUCTION IS NOT PERMITTED UNLESS SPECIFIED.

   GALVANIZED REINFORCING STEEL BARS MAY BE SUBSTITUTED FOR EPOXY COATED REINFORCING STEEL BARS AT NO ADDITIONAL COST TO THE DEPARTMENT.

   DO NOT USE ADHESIVE ANCHORS IN TENSION APPLICATION FOR PERMANENT INSTALLATIONS.

   DO NOT USE ADHESIVE ANCHORS IN A SUSTAINED TENSION APPLICATION FOR TEMPORARY INSTALLATIONS, INCLUDING DURING CONSTRUCTION.

   FOUNDATION EXCAVATIONS ARE TO BE INSPECTED AND APPROVED BY THE DISTRICT GEOTECHNICAL ENGINEER PRIOR TO THE PLACEMENT OF CONCRETE OR REBAR. PROVIDE A MINIMUM OF 48 HOURS NOTICE TO THE DISTRICT GEOTECHNICAL ENGINEER FOR FOUNDATION INSPECTION. BEFORE PLACING CONCRETE, ENSURE THAT THE BEARING AREA IS FIRM, REASONABLY DRY, AND FREE OF WATER. THE REPRESENTATIVE WILL INSPECT THE FOUNDATION AREA FOR BEARING CAPACITY BEFORE PLACEMENT. IF DIRECTED, DRILL OR DRIVE BAR INTO THE MATERIAL BELOW THE FOUNDATION OR FOOTING BOTTOM TO A DEPTH SUFFICIENT TO DETERMINE THE SUITABILITY OF THE MATERIAL.

   DO NOT EXCEED A 2'-0" DIFFERENCE IN FILL ELEVATION ON THE SIDES DURING PLACEMENT OF BACKFILL. DO NOT ALLOW THE WHEELS OF THE ROLLERS TO COME CLOSER THAN 1'-0" TO THE FACE OF THE STRUCTURE DURING COMPACTION OF THE BACKFILL.

   THE CONTRACTOR IS RESPONSIBLE FOR THE STABILITY OF ALL EXCAVATED SLOPES. DIRECT ALL SURFACE RUNOFF AWAY FROM THE EXCAVATION USING CURBING OR A BARRIER ALONG THE TOP OF THE SLOPE. IF REQUIRED, COVER THE EXCAVATED SLOPES WITH PLASTIC TO PROTECT AGAINST INFILTRATION. PERFORM EXCAVATION IN ACCORDANCE WITH OSHA REQUIREMENTS.

   THE CONTRACTOR IS SOLELY RESPONSIBLE FOR THE SAFE ERECTION OF ALL STRUCTURAL COMPONENTS. PROVIDE ALL NECESSARY BRACING AND SUPPORTS.

   THE FOLLOWING LEGEND APPLIES TO ALL DRAWINGS:

T =	TOP	R.F. =	REAR FACE
BOT. =	BOTTOM	E.F. =	EACH FACE
F.F. =	FRONT FACE	W.P. =	WORKPOINT

   VERIFY ALL DIMENSIONS AND GEOMETRY OF THE EXISTING STRUCTURE IN THE FIELD AS NECESSARY FOR PROPER FIT OF THE PROPOSED CONSTRUCTIONS.

   REMOVE PORTIONS OF EXISTING WINGWALLS, FOOTINGS, AND APRON AS NECESSARY FOR PROPOSED CONSTRUCTION.

   THE CONTRACTOR IS RESPONSIBLE FOR PROVIDING SUFFICIENT DEWATERING SO THAT THE EXCAVATIONS ARE DRY ENOUGH TO BE INSPECTED BY A REPRESENTATIVE OF THE DEPARTMENT.

   BOTTOM OF EXCAVATION MAY BE ORDERED BY A REPRESENTATIVE OF THE DEPARTMENT TO BE AT ANY ELEVATION OR OF ANY DIMENSIONS NECESSARY TO PROVIDE A PROPER FOUNDATION.

   STOCKPILE STREAMBED MATERIAL AT ACCEPTABLE LOCATIONS WITHIN THE RIGHT OF WAY UNTIL BACKFILLING ACTIVITIES ARE TO BEGIN. IMMEDIATELY COVER STOCKPILES WITH DURABLE PLASTIC SO THAT THE STOCKPILES DO NOT ADD TO THE EROSION AND SEDIMENTATION. PLACE STREAMBED MATERIAL WHERE INDICATED AFTER COMPLETION OF CULVERT CONSTRUCTION.

   PLACE STREAMBED MATERIAL ON TOP OF APRONS AND WITHIN CULVERT TO A MAXIMUM HEIGHT OF 1'-0" ABOVE TOP OF BOTTOM SLAB.

   NOTIFY THE REGIONAL HEADQUARTERS OF THE FISH COMMISSION PRIOR TO CONSTRUCTION AND COOPERATE WITH THE FISH COMMISSION DURING CONSTRUCTION:
   236 LAKE ROAD
   SOMERSET, PA 15501
   (814) 445-8974

   DIVERT RUNNING WATER BY AN ACCEPTABLE METHOD AND IN ACCORDANCE WITH THE EROSION AND SEDIMENT CONTROL PLAN.

6. UTILITY NOTE:
   - COORDINATE, LOCATE, AND CONDUCT ALL WORK RELATED TO PUBLIC AND PRIVATE UTILITIES IN ACCORDANCE WITH PUBLICATION 408, SECTIONS 105.06 AND 107.12.

7. FOUNDATION NOTE:
   - OVEREXCAVATE TO BEDROCK BELOW THE BOTTOM OF THE CULVERT. VISUALLY INSPECT THE BASE OF EXCAVATION. WHERE PARTICULARLY LOOSE AND/OR SOFT UNSTABLE MATERIALS AS ENCOUNTERED, REMOVE SUCH LOOSE/SOFT MATERIAL FOR A MAXIMUM DEPTH OF ONE (1) ADDITIONAL FOOT. BACKFILL THE OVER EXCAVATION WITH COMPACTED AASHTO NO.4 COARSE AGGREGATE TO PROVIDE UNIFORM BEARING CONDITIONS.

8. EXISTING STRUCTURE PLANS:
   - PLANS FOR THE EXISTING BRIDGE ARE AVAILABLE, THE PITTSBURGH AND WEST VIRGINIA RY. COMPANY, FILE NO. 5272-B-40 SHT. 1 OF 2 AND EXHIBIT "B", DATED JANUARY 6, 1930.
   - DO NOT CONSIDER ANY OF THE DATA ON THE EXISTING STRUCTURE SUPPLIED IN THE ORIGINAL DESIGN DRAWINGS OR MADE AVAILABLE TO YOU AS POSITIVE REPRESENTATIONS OF ANY OF THE CONDITIONS THAT YOU WILL ENCOUNTER IN THE FIELD. THIS DATA IS NOT TO BE CONSIDERED A BASIS FOR COMPUTATION OF THE UNIT IN PRICES USED FOR BIDDING PURPOSES. THE BIDDER IS NOT TO RELY ON THIS INFORMATION, BUT IS TO ASSUME THE POSSIBILITY THAT CONDITIONS AFFECTING THE COST AND/OR QUANTITIES OF WORK IS TO BE PERFORMED MAY DIFFER FROM THOSE INDICATED.

BOX CULVERT FABRICATION NOTES:

1. USE F'C = 5000 PSI (28 DAY STRENGTH) CONCRETE FOR PRECAST BOX CULVERT SEGMENTS AND END SECTIONS.
2. PROVIDE POST-TENSIONING CONNECTION DETAILS OF PRECAST BOX SECTIONS IN ACCORDANCE WITH BC-798M. SUBMIT POST-TENSIONING DESIGN AND DETAILS FOR APPROVAL DURING SHOP DRAWING REVIEW. POST-TENSIONING DESIGN AND ADDITIONAL REINFORCEMENT DESIGN DUE TO LIFTING DESIGN REQUIREMENTS MUST BE SEALED BY A PROFESSIONAL ENGINEER REGISTERED IN PENNSYLVANIA. DO NOT USE GALVANIZED STRAP CONNECTIONS TO CONNECT BOX SEGMENTS.
3. REINFORCEMENT SHOWN IS TYPICAL FOR ALL PRECAST SECTIONS AND IS BASED ON THE DESIGN CONDITIONS OUTLINED IN THE GENERAL NOTES. THE FABRICATOR IS RESPONSIBLE FOR ADDITIONAL REINFORCEMENT REQUIRED FOR HANDLING, TRANSPORTATION, AND INSTALLATION.
4. FABRICATE AND INSTALL BOX CULVERT IN CONFORMANCE WITH PUBLICATION 408, SECTIONS 1085 AND 1108.
5. FABRICATOR TO PLACE POST-TENSIONING DUCTS AT EITHER CORNER OR HAUNCH, TO SATISFY DESIGN AND CONSTRUCTION REQUIREMENTS. PROVIDE 3" CONCRETE CLEARANCE. HAUNCH DUCT MUST BE TIED TO INSIDE REINFORCEMENT.
6. PLACE POST-TENSIONING DUCTS WITHIN THE WALL OR SLAB ANYWHERE BETWEEN THE LAYERS OF REINFORCEMENT TO AVOID THE SLOPED PORTION OF THE JOINT AS TO PROMOTE SEALING OF THE DUCT.
7. REINFORCEMENT SHOWN REPRESENTS AN ACCEPTABLE DESIGN BUT IS NOT INTENDED TO PRECLUDE THE USE OF OTHER ACCEPTABLE BAR SIZES AND SPACINGS (INCLUDING WELDED WIRE FABRIC).
8. CONNECT PRECAST BOX CULVERT SEGMENTS BY THE USE OF GALVANIZED POST-TENSIONING STRANDS (SEE BC-798M FOR DETAILS).
9. FABRICATOR MAY ADJUST SECTION LENGTHS AS DESIRED. MINIMUM SECTION LENGTH IS 4'-0".
10. CAST-IN-PLACE CONCRETE IS PERMITTED IN ANY PORTION OF THE PRECAST END SECTIONS, ONLY IF HEIGHT OR WIDTH OF END SECTIONS ARE RESTRICTED DUE TO SHIPPING RESTRAINTS.

APPROXIMATE QUANTITIES - CULVERT, AS DESIGNED

ITEM NO.	DESCRIPTION	UNIT	TOTAL
8510-0001	PRECAST CONCRETE BOX CULVERT EXTENSION, AS DESIGNED, W&LE RAILROAD *	LS	---
(1)	CLASS 3 EXCAVATION	CY	174
(1)	CAST-IN-PLACE CEMENT CONCRETE *	CY	33
(1)	SELECTED BORROW EXCAVATION, STRUCTURE BACKFILL	CY	199
(1)	NO. 2A COARSE AGGREGATE OR TYPE B FLOWABLE BACKFILL	CY	122
(1)	NO. 4 COARSE AGGREGATE BEDDING *	CY	133
(1)	NO. 57 COARSE AGGREGATE	CY	29
(1)	DOWEL HOLES, 18" DEPTH	EACH	72
(1)	PRECAST REINFORCED CONCRETE BOX CULVERT END SECTION	EACH	2
(1)	10' x 11' PRECAST REINFORCED CONCRETE BOX CULVERT SEGMENTS	LF	72
(1)	MEMBRANE WATERPROOFING (5)	SY	361
(1)	8" STRUCTURE FOUNDATION DRAIN	LF	214
(1)	6" DIA. P.V.C. PIPE (SCHEDULE 40)	LF	54
1002-0194	REINFORCEMENT BARS, EPOXY-COATED	LBS	3100
1091-0331	EPOXY INJECTION CRACK SEAL (3)	LF	35
4205-0268	SELECTED BORROW EXCAVATION ROCK, CLASS R-8 WITH GROUT AND STREAMBED MATERIAL *	CY	53
5018-0070	REMOVAL OF PORTION OF EXISTING CULVERT, W&LE CULVERT (2)*	LS	---
9000-0920	OVEREXCAVATION AND BACKFILL UNDER FOUNDATION (4)*	CY	60
9000-0921	REPAIR DETERIORATED CONCRETE-W&LE CULVERT (3)*	SF	172
9000-0922	CRACK SEALING REPAIR (3)(4)*	LF	38
9203-0106	TEMPORARY EXCAVATION SUPPORT AND PROTECTION SYSTEM *	LS	---

* SEE SPECIAL PROVISIONS.

(1) ITEMS IN PRECAST CONCRETE BOX CULVERT EXTENSION, AS DESIGNED ARE GIVEN FOR INFORMATION ONLY.

(2) EXISTING STRUCTURE REMOVAL INCLUDES APRON AND WINGWALLS AND/OR FOOTINGS THAT INTERFERE WITH THE PROPOSED CONSTRUCTION.

(3) STRUCTURAL REPAIR QUANTITIES INCLUDE 25% CONTINGENCY.

(4) QUANTITY PROVIDED ON AS-NEEDED AND AS-DIRECTED BASIS.

(5) INCLUDES PROTECTION BOARD

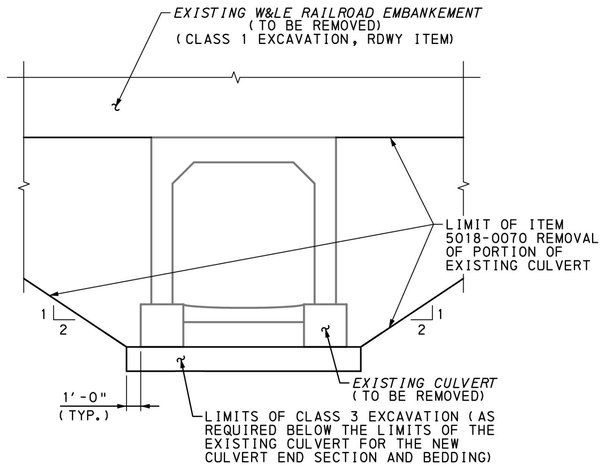

CULVERT EXCAVATION LIMITS

(UPSTREAM SHOWN - DOWNSTREAM SIMILIAR)
NOT TO SCALE

CERTIFIED CORRECT PLANS
Professional Engineer
Approved by Bureau of Technical Utility Services
PA PUBLIC UTILITY COMMISSION
ATTEST Secretary

Mark	Description	By	Chk'd.	Recm'd.	Date
REVISIONS					

COMMONWEALTH OF PENNSYLVANIA
REGISTERED PROFESSIONAL
JONATHAN D. McHUGH
ENGINEER NO PE062099

COMMONWEALTH OF PENNSYLVANIA
DEPARTMENT OF TRANSPORTATION

WESTMORELAND COUNTY
S.R. 0070 SECTION E10
WHEELING & LAKE ERIE RAILROAD
STATION 5028+15.15 (MP C-17.01)
OVER CEDAR CREEK

PRECAST CONCRETE BOX CULVERT EXTENSION
GENERAL NOTES & QUANTITIES

RECOMMENDED February 3rd, 2022

SHEET 2 OF 18

DES: JDM | DWN: CMC | CHK: JDM

pw:\\gfnet-pw.bentley.com:gfnet-pw-01\Documents\Projects\61636\INPUT\COMP_01\CIVIL\BRDG\W&LE RR CULVERT\FINAL\SHT_02_GENERAL NOTES & QUANTITIES.dgn
1/24/2022 2:40:23 PM

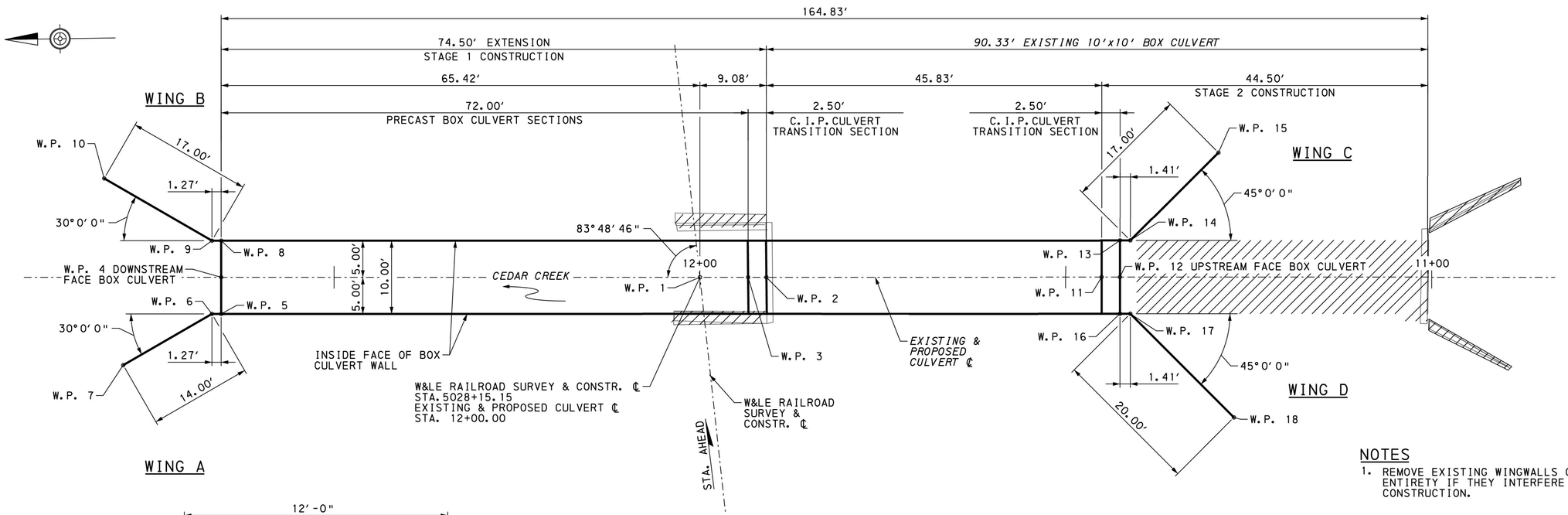

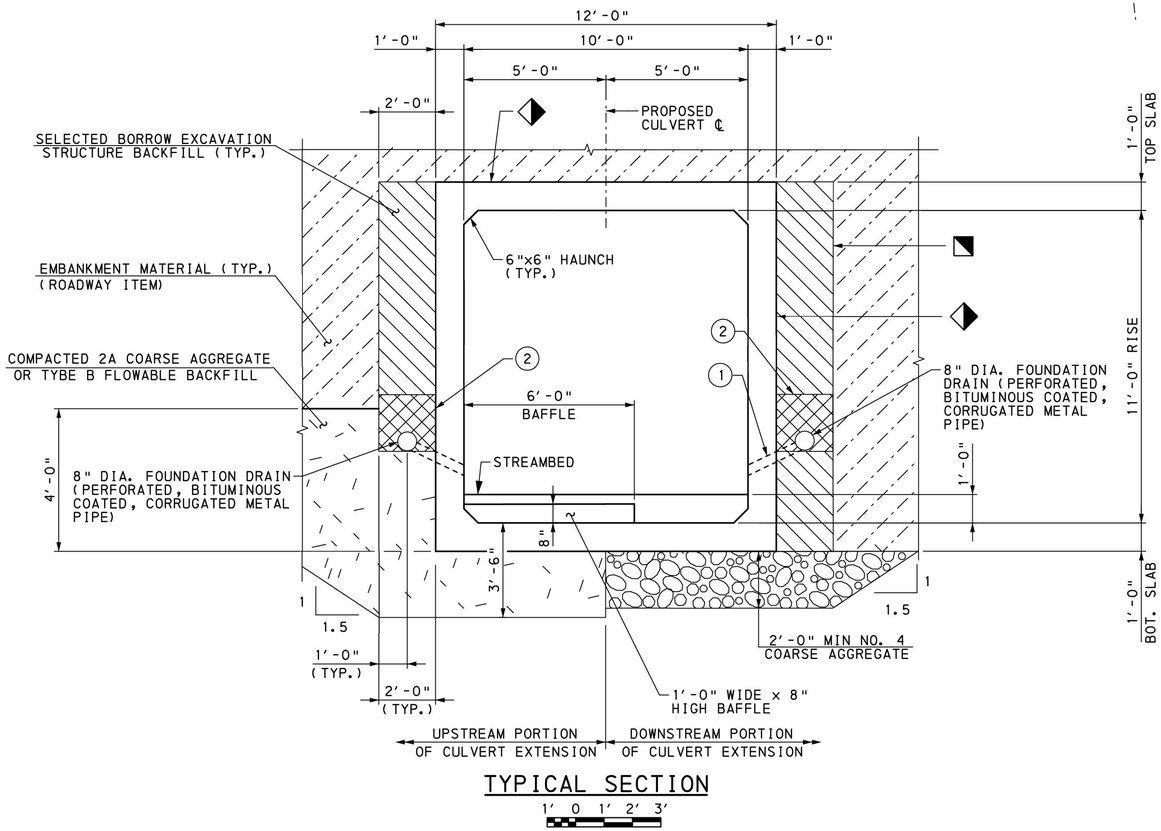

TYPICAL SECTION

1' 0 1' 2' 3'

STAKE-OUT PLAN

2' 0 4' 8'

CERTIFIED CORRECT PLANS
Professional Engineer
Approved by Bureau of Technical Utility Services
PA PUBLIC UTILITY COMMISSION
ATTEST
Secretary

WORK POINT COORDINATES

WORK POINT	STATION	OFFSET	NORTHING	EASTING
W.P. 1	12+00.00	0.0000	303894.0111	1402657.0802
W.P. 2	11+90.92	0.0000	303884.9321	1402656.9472
W.P. 3	11+93.42	0.0000	303887.4318	1402656.9838
W.P. 4	12+65.42	0.0000	303959.4241	1402658.0385
W.P. 5	12+65.42	-5.0000	303959.4973	1402653.0391
W.P. 6	12+66.69	-5.0000	303960.7651	1402653.0577
W.P. 7	12+78.81	-12.0000	303972.9907	1402646.2360
W.P. 8	12+65.42	5.0000	303959.3508	1402663.0380
W.P. 9	12+66.69	5.0000	303960.6186	1402663.0566
W.P. 10	12+81.41	13.5000	303975.2149	1402671.7713
W.P. 11	11+45.08	0.0000	303839.0970	1402656.2757
W.P. 12	11+42.58	0.0000	303836.5973	1402656.2391
W.P. 13	11+42.58	5.0000	303836.5240	1402661.2385
W.P. 14	11+41.17	5.0000	303835.1100	1402661.2178
W.P. 15	11+29.15	17.0208	303822.9143	1402673.0612
W.P. 16	11+42.58	-5.0000	303836.6705	1402651.2396
W.P. 17	11+41.17	-5.0000	303835.2565	1402651.2189
W.P. 18	11+27.02	-19.1421	303821.3230	1402636.8711

NOTE:

FOUR DECIMAL PLACE COORDINATES ARE FOR COMPUTATIONAL PURPOSES ONLY AND DO NOT IMPLY A PRECISION BEYOND TWO DECIMAL PLACES.

CONTRACTOR TO VERIFY ALL DIMENSIONS AND GEOMETRY OF THE EXISTING STRUCTURE IN THE FIELD AS NECESSARY FOR PROPER FIT OF PROPOSED CONSTRUCTION. MINOR ADJUSTMENT OF WORK POINT COORDINATES MAY BE REQUIRED BASED ON ACTUAL FIELD CONDITIONS.

COMMONWEALTH OF PENNSYLVANIA
REGISTERED PROFESSIONAL
JONATHAN D. McHUGH
ENGINEER NO PE062291

NOTES

1. REMOVE EXISTING WINGWALLS OR FOOTINGS IN THEIR ENTIRETY IF THEY INTERFERE WITH PROPOSED CONSTRUCTION.

LEGEND:

- EXISTING CULVERT TO BE REMOVED
- (1) 6" DIA. P.V.C. WEEPHOLE (SCHEDULE 40) CONNECTED TO THE FOUNDATION DRAIN (TYP.)
- (2) NO. 57 COARSE AGGREGATE ENCASED WITH CLASS 1 GEOTEXTILE MATERIAL (CLASS 1 GEOTEXTILE IS INCIDENTAL TO NO. 57 COARSE AGGREGATE QUANTITY.)
- CLASS 4, TYPE A GEOTEXTILE PLACED BETWEEN STRUCTURE BACKFILL AND EMBANKMENT MATERIAL (INCIDENTAL TO STRUCTURE BACKFILL)
- MEMBRANE WATERPROOFING, SEE SHEET 7 FOR DETAIL.

Mark	Description	By	Chk'd.	Recm'd.	Date
REVISIONS					

COMMONWEALTH OF PENNSYLVANIA
DEPARTMENT OF TRANSPORTATION

WESTMORELAND COUNTY
S.R. 0070 SECTION E10
WHEELING & LAKE ERIE RAILROAD
STATION 5028+15.15 (MP C-17.01)
OVER CEDAR CREEK

PRECAST CONCRETE BOX CULVERT EXTENSION
STAKE-OUT PLAN & TYPICAL SECTION

RECOMMENDED February 3rd, 2022

SHEET 3 OF 18

DES: JDM | DWN: CMC | CHK: CTV

pw:\\gfnet-pw.bentley.com:gfnet-pw-01\Documents\Projects\61636\INPUT\COMP_01\CIVIL\BRDG\W&LE RR CULVERT\FINAL\SHT_03_STAKE OUT PLAN.dgn
1/4/2022 2:40:26 PM

CONCEPTUAL STAGE 1 CONSTRUCTION SEQUENCE

NOT TO SCALE

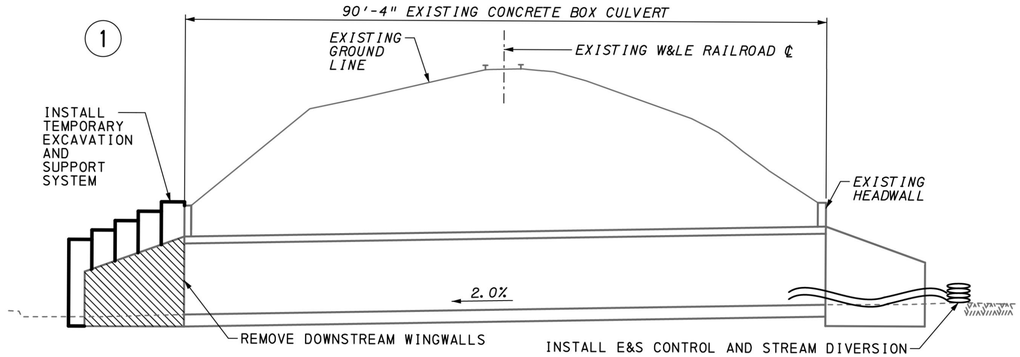

1. INSTALL ALL E&S CONTROL MEASURES AS INDICATED IN E&S PLANS. EXCAVATE AND STOCKPILE EXISTING STREAMBED MATERIAL. INSTALL STREAM DIVERSION.
2. REMOVE EXISTING CULVERT DOWNSTREAM WINGWALLS AND INSTALL DOWNSTREAM TEMPORARY EXCAVATION AND SUPPORT SYSTEM.

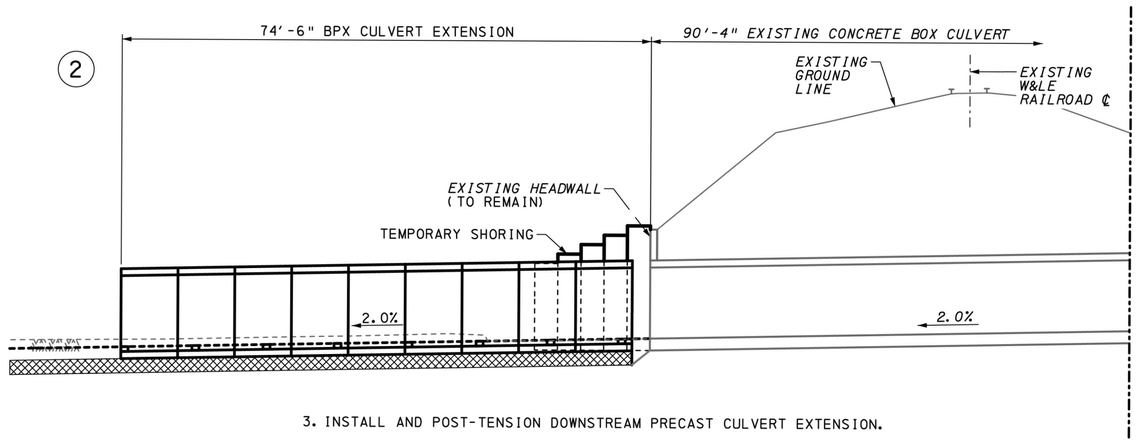

3. INSTALL AND POST-TENSION DOWNSTREAM PRECAST CULVERT EXTENSION.

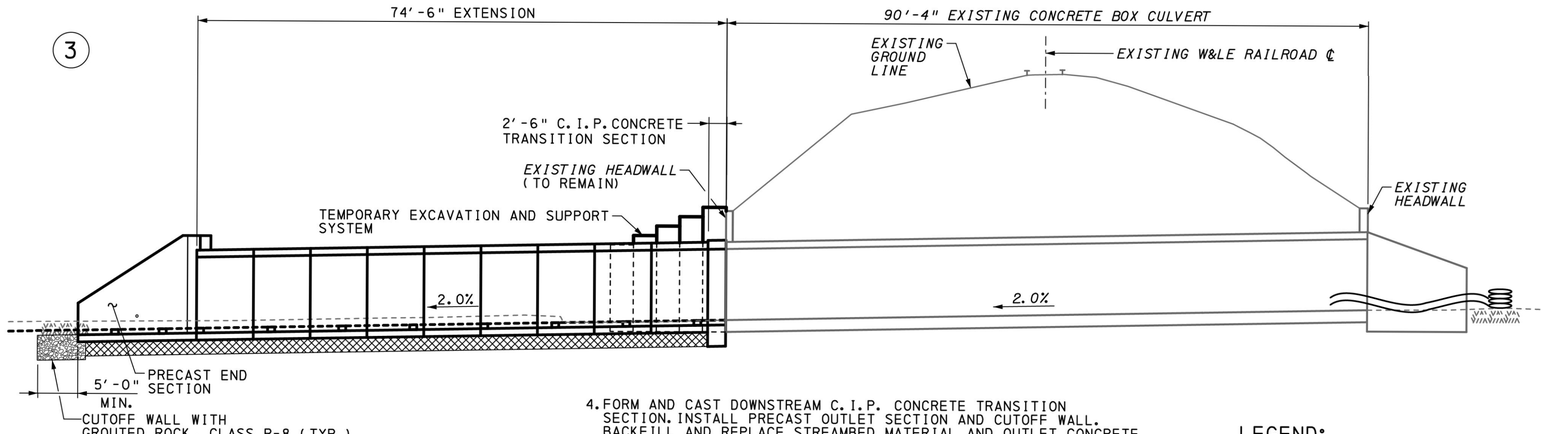

4. FORM AND CAST DOWNSTREAM C.I.P. CONCRETE TRANSITION SECTION. INSTALL PRECAST OUTLET SECTION AND CUTOFF WALL. BACKFILL AND REPLACE STREAMBED MATERIAL AND OUTLET CONCRETE TRANSITION WEDGES.

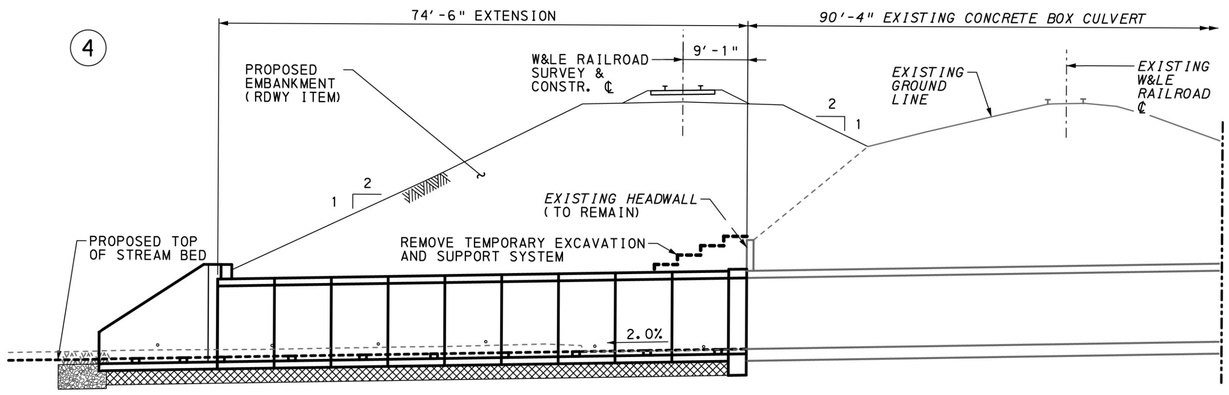

5. REMOVE TEMPORARY EXCAVATION AND SUPPORT SYSTEM.
6. CONSTRUCT PROPOSED RAILROAD EMBANKMENT AND RELOCATED W&LE RAILWAY (ROADWAY ITEMS).
7. SHIFT RAIL TRAFFIC TO NEW ALIGNMENT.

GENERAL:

1. CONSTRUCTION SEQUENCE:
   a. THE CONSTRUCTION SEQUENCE SHOWN AND DESCRIBED IN THESE DRAWINGS IS A SUGGESTED SEQUENCE. ITS INCLUSION IN THESE DRAWINGS IS NOT TO INFER THAT THIS SEQUENCE OR METHOD IS MANDATED.
   b. SUBMIT A CONSTRUCTION SEQUENCE DETAILING THE SEQUENCE, MEANS, METHODS, ETC. BY WHICH THE CULVERT WILL BE CONSTRUCTED.
   c. HAVE AN ENGINEER REGISTERED IN THE COMMONWEALTH OF PENNSYLVANIA DIRECT THE PREPARATION OF THE CALCULATIONS, DRAWINGS, DETAILS, ETC. AND SEAL EACH ITEM SUBMITTED.
   d. SUBMIT ITEMS REQUIRED BY THE DEPARTMENT AND RAILROAD, I.E., CALCULATIONS DRAWINGS, SKETCHES, ETC. FOR REVIEW AND ACCEPTANCE.
   e. OBTAIN THE DEPARTMENT'S AND RAILROAD'S APPROVAL OF THE CONSTRUCTION SEQUENCE PRIOR TO BEGINNING WORK ON THE BRIDGE.
   f. THE CONTRACTOR IS FULLY RESPONSIBLE FOR THE CONSTRUCTION SEQUENCE EVEN IF THE SEQUENCE CONTAINED IN THE PLANS IS FOLLOWED.
2. TEMPORARY EXCAVATION AND SUPPORT SYSTEM:
   a. PROVIDE DESIGN AND DETAILING. SEE SPECIAL PROVISIONS (ITEM 9203-0106).
   b. HAVE AN ENGINEER REGISTERED IN THE COMMONWEALTH OF PENNSYLVANIA DIRECT THE PREPARATIONS OF THE CALCULATIONS, DRAWING, DETAILS, ETC. AND SEAL EACH ITEM SUBMITTED.
   c. SUBMIT REQUIRED ITEMS TO THE DEPARTMENT AND RAILROAD FOR REVIEW AND OBTAIN APPROVAL.

LEGEND:

(X) CONCEPTUAL STAGE SEQUENCE NUMBER

NOTES:

1. RAILROAD CULVERT CONSTRUCTION AND DEMOLITION AS SHOWN IN ALL STAGES BELOW TO BE COMPLETED AS PART OF PHASE 2 OF THE OVERALL PROJECT PHASING.
2. PROTECT RAILROAD AND MAINTAIN W&LE RAILWAY OPERATIONS EXCEPT AS OUTLINED IN ROADWAY PLANS.
3. INSTALL ALL E&S CONTROL MEASURES AS INDICATED IN E&S PLANS PRIOR TO CULVERT CONSTRUCTION.

Mark	Description	By	Chk'd.	Recm'd.	Date
REVISIONS					

CERTIFIED CORRECT PLANS
Professional Engineer
Approved by Bureau of Technical Utility Services
PA PUBLIC UTILITY COMMISSION
ATTEST Secretary

COMMONWEALTH OF PENNSYLVANIA
REGISTERED PROFESSIONAL
JONATHAN D. McHUGH
ENGINEER NO PE062299

COMMONWEALTH OF PENNSYLVANIA
DEPARTMENT OF TRANSPORTATION

WESTMORELAND COUNTY
S.R. 0070 SECTION E10
WHEELING & LAKE ERIE RAILROAD
STATION 5028+15.15 (MP C-17.01)
OVER CEDAR CREEK

PRECAST CONCRETE BOX CULVERT EXTENSION
CONSTRUCTION SEQUENCE (1 OF 2)

RECOMMENDED February 3rd, 2022

SHEET 4 OF 18

DES: JDM | DWN: CMC | CHK: CTV

PW:\\gfnet-pw.bentley.com:gfnet-pw-01\Documents\Projects\61636\INPUT\COMP_01\CIVIL\BRDG\W&LE RR CULVERT\FINAL\SHT_04_CONSTRUCTION PHASING 1.dgn
2/4/2022 2:40:27 PM

CONCEPTUAL STAGE 2 CONSTRUCTION SEQUENCE

NOT TO SCALE

1

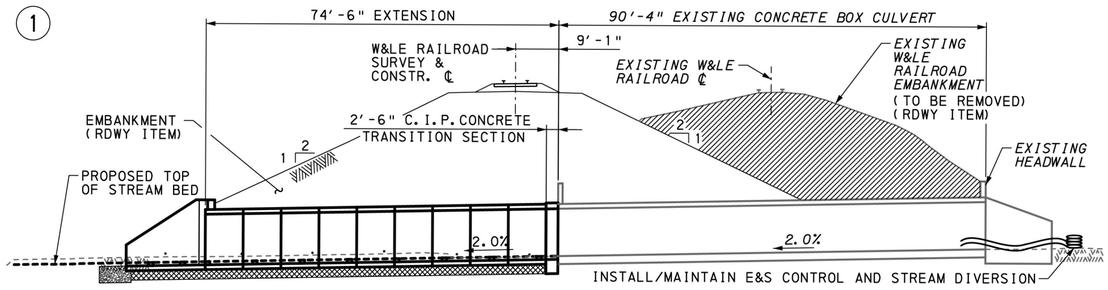

1. INSTALL/MAINTAIN ALL E&S CONTROL MEASURES AND STREAM DIVERSION AS INDICATED IN E&S PLANS. EXCAVATE AND STOCKPILE EXISTING STREAMBED MATERIAL.
2. REMOVE EXISTING W&LE RAILWAY AND EMBANKMENT TO FACILITATE PARTIAL UPSTREAM CULVERT REMOVAL (ROADWAY ITEMS).

2

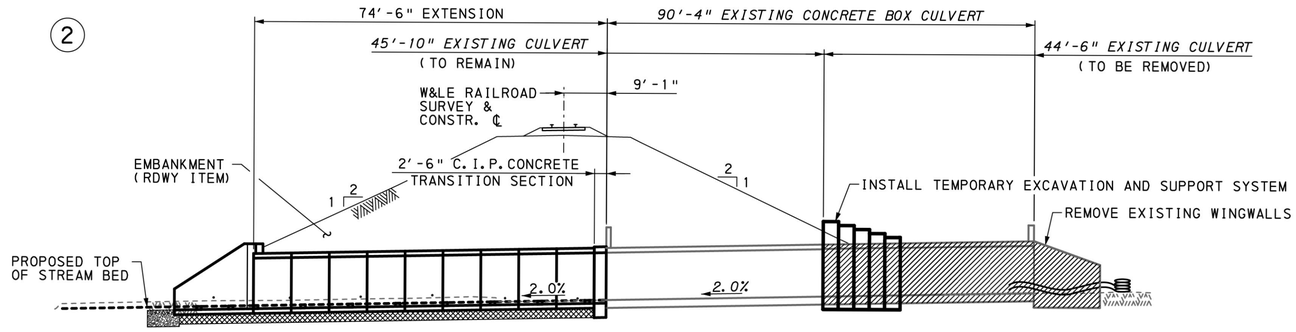

3. INSTALL UPSTREAM EXCAVATION AND SUPPORT SYSTEM.
4. DEMOLISH AND REMOVE PORTION OF EXISTING BOX CULVERT AND UPSTREAM WINGWALLS.

3

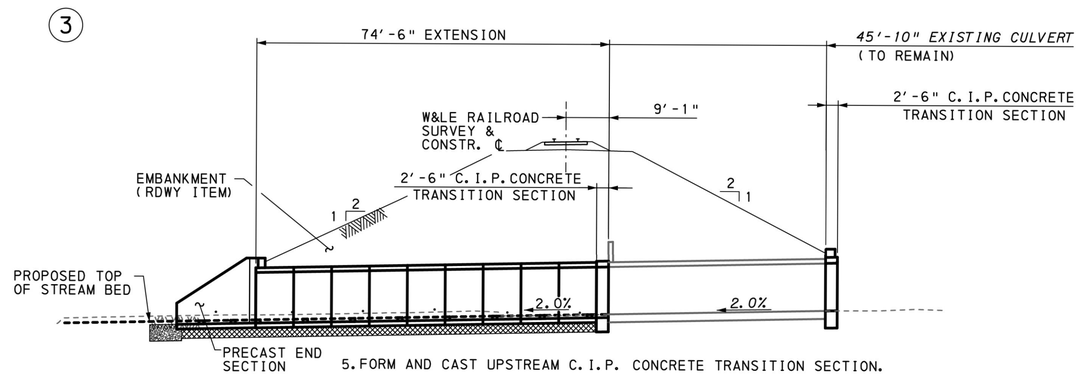

5. FORM AND CAST UPSTREAM C.I.P. CONCRETE TRANSITION SECTION.

4

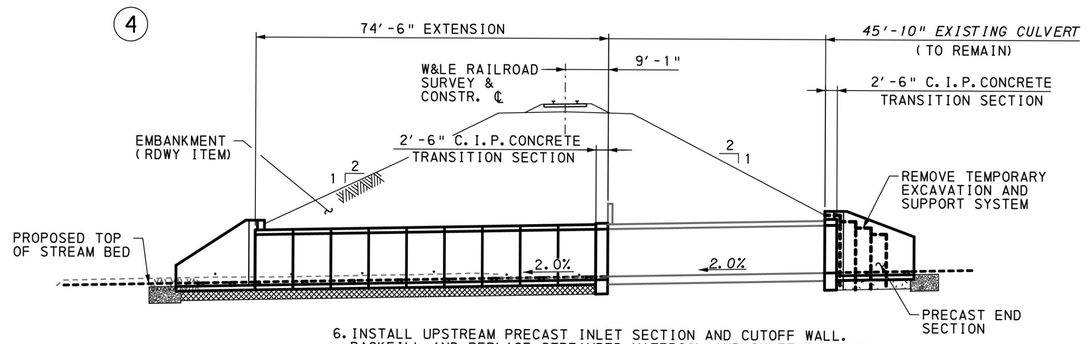

6. INSTALL UPSTREAM PRECAST INLET SECTION AND CUTOFF WALL. BACKFILL AND REPLACE STREAMBED MATERIAL AND INLET CONCRETE TRANSITION WEDGES.
7. REMOVE TEMPORARY EXCAVATION AND SUPPORT SYSTEM.

LEGEND:

(X) CONCEPTUAL STAGE SEQUENCE NUMBER

LIMITS OF REMOVAL

NOTES:

1. FOR ADDITIONAL CONSTRUCTION SEQUENCE NOTES, SEE SHEET 4.
2. INSTALL ALL E&S CONTROL MEASURES AS INDICATED IN E&S PLANS PRIOR TO CULVERT CONSTRUCTION.

Mark	Description	By	Chk'd.	Recm'd.	Date
REVISIONS					

CERTIFIED CORRECT PLANS
David R. Hilbish
Professional Engineer
Approved by Bureau of Technical Utility Services
PA PUBLIC UTILITY COMMISSION
ATTEST Secretary

COMMONWEALTH OF PENNSYLVANIA
REGISTERED PROFESSIONAL
JONATHAN D. McHUGH
ENGINEER NO PE062299

COMMONWEALTH OF PENNSYLVANIA
DEPARTMENT OF TRANSPORTATION

WESTMORELAND COUNTY
S.R. 0070 SECTION E10
WHEELING & LAKE ERIE RAILROAD
STATION 5028+15.15 (MP C-17.01)
OVER CEDAR CREEK

PRECAST CONCRETE BOX CULVERT EXTENSION
CONSTRUCTION SEQUENCE (2 OF 2)

RECOMMENDED February 3rd, 2022

SHEET 5 OF 18

DES: JDM | DWN: CMC | CHK: CTV

PW:\\gfnet-pw.bentley.com:gfnet-pw-01\Documents\Projects\61636\INPUT\COMP_01\CIVIL\BRDG\W&LE RR CULVERT\FINAL\SHT_05_CONSTRUCTION PHASING 2.dgn
2/4/2022 2:40:29 PM

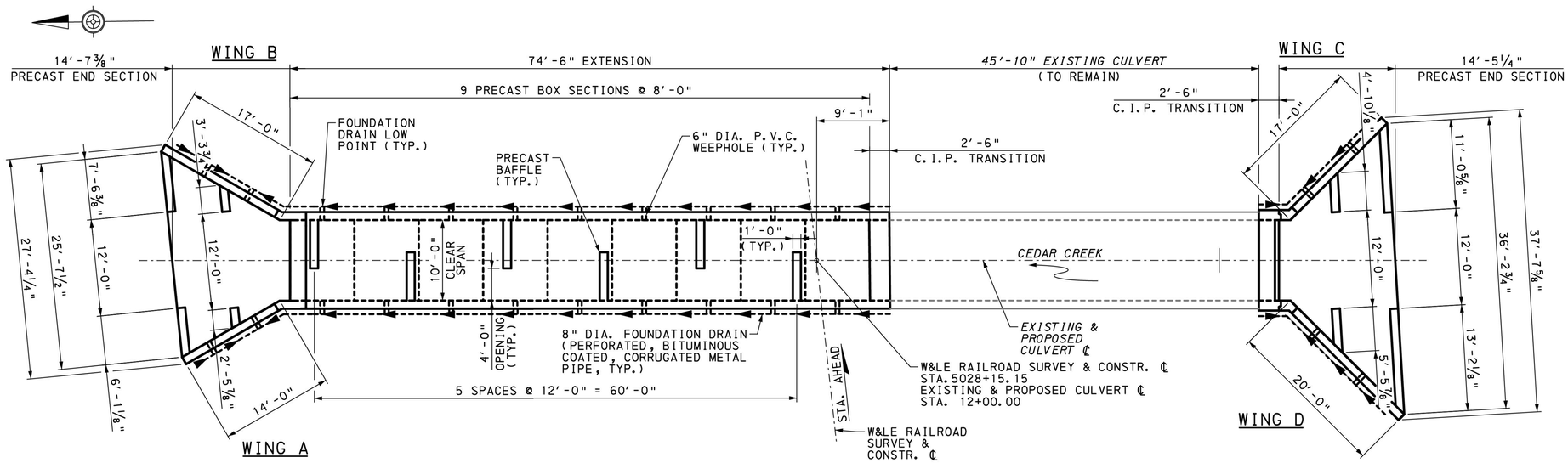

CULVERT PLAN

2′ 0 4′ 8′

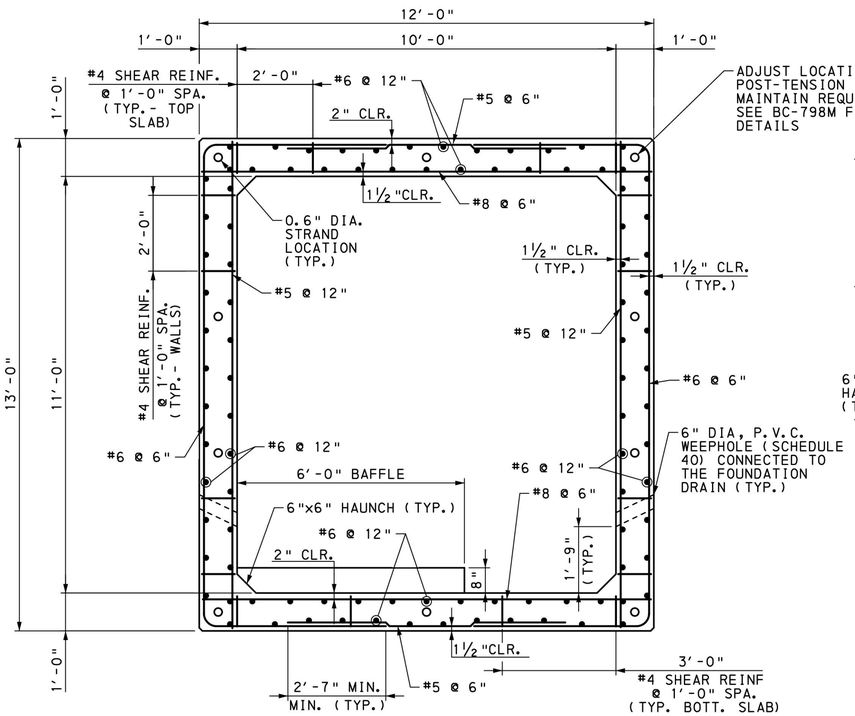

TYPICAL PRECAST BOX REINFORCEMENT

1′ 0 1′ 2′

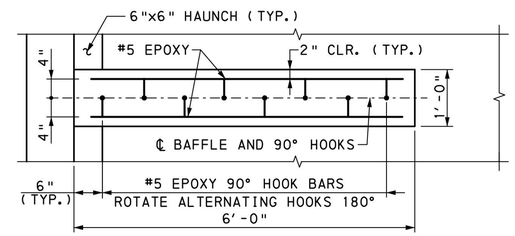

PLAN

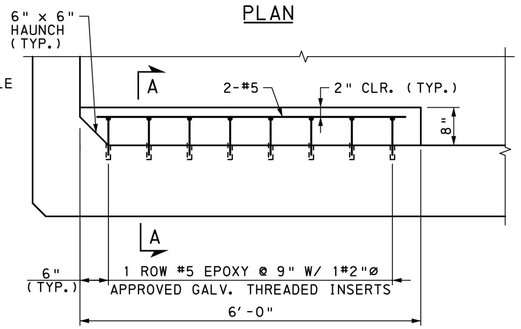

ELEVATION

TYPICAL BAFFLE

12" 0 6" 12"

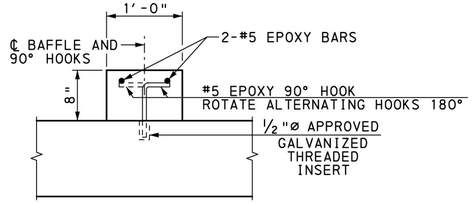

SECTION A-A

6" 0 6" 12"

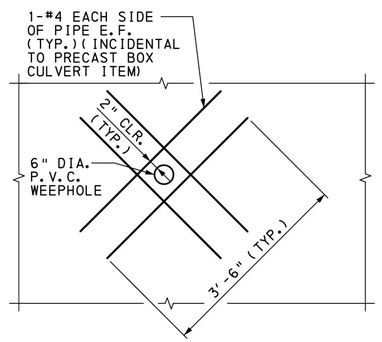

WEEPHOLE REINFORCEMENT

(FOR PRECAST BOX CULVERT SECTIONS) NOT TO SCALE

LEGEND:

→--- FOUNDATION DRAIN DIRECTION OF SLOPE (MIN. SLOPE ⅛"/FT.)

NOTES:

1. FOR GENERAL NOTES, SEE SHEET 2.
2. FOR STAKE-OUT PLAN, SEE SHEET 3.

Mark	Description	By	Chk'd.	Recm'd.	Date
REVISIONS					

TABLE OF FOUNDATION DESIGN DATA

	SUBSTRUCTURE UNIT	C.I.P. TRANSITIONS	PRECAST EXTENSION	WINGWALLS A, B, C, D
BEARING RESISTANCE	CONTROLLING LIMIT STATE	STR I - DEAD LOADS	STR I - DEAD LOADS	STR I - DEAD LOADS
	UNIFORM FACTORED BEARING PRESSURE	8.0 KSF	7.86 KSF	1.02 KSF
	FACTORED BEARING RESISTANCE	32.34 KSF	32.34 KSF	32.34 KSF

BEDDING DATA	MOIST UNIT DENSITY	125 PCF
	SATURATED UNIT DENSITY	139 PCF
	COHESION	0 PSF
	INTERNAL ANGLE OF FRICTION	34°
	ELASTIC MODULUS (E)	7 KSI

CERTIFIED CORRECT PLANS
David A. Hefferich
Professional Engineer
Approved by Bureau of Technical Utility Services
PA PUBLIC UTILITY COMMISSION
ATTEST Secretary

COMMONWEALTH OF PENNSYLVANIA REGISTERED PROFESSIONAL JONATHAN D. McHUGH ENGINEER NO. PE062299

COMMONWEALTH OF PENNSYLVANIA
DEPARTMENT OF TRANSPORTATION

WESTMORELAND COUNTY
S.R. 0070 SECTION E10
WHEELING & LAKE ERIE RAILROAD
STATION 5028+15.15 (MP C-17.01)
OVER CEDAR CREEK

PRECAST CONCRETE BOX CULVERT EXTENSION
PRECAST BOX DETAILS (1 OF 2)

RECOMMENDED February 3rd, 2022

SHEET 6 OF 18

DES: JDM | DWN: CMC | CHK: CTV

pw:\\gfnet-pw.bentley.com:gfnet-pw-01\Documents\Projects\61636\INPUT\COMP_01\CIVIL\BRDG\W&LE RR CULVERTYFINAL\SHT_06_PRECAST BOX DETAILS 1.dgn
1/4/2022 2:40:30 PM

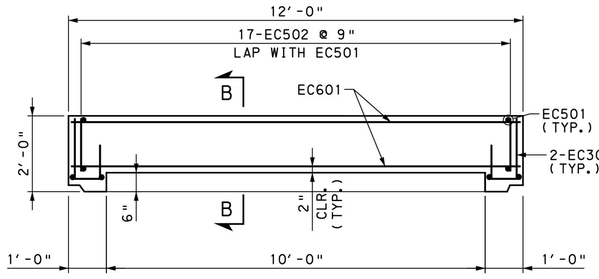

CAST-IN-PLACE CONCRETE HEADWALL PLAN (OUTLET)

1' 0 1' 2'

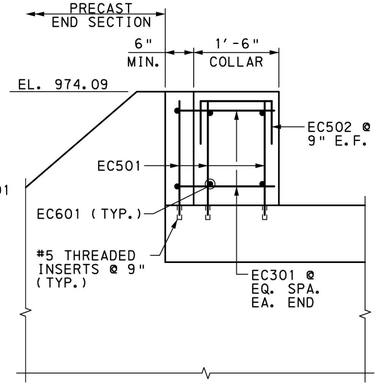

SECTION B-B

12" 0 6" 12"

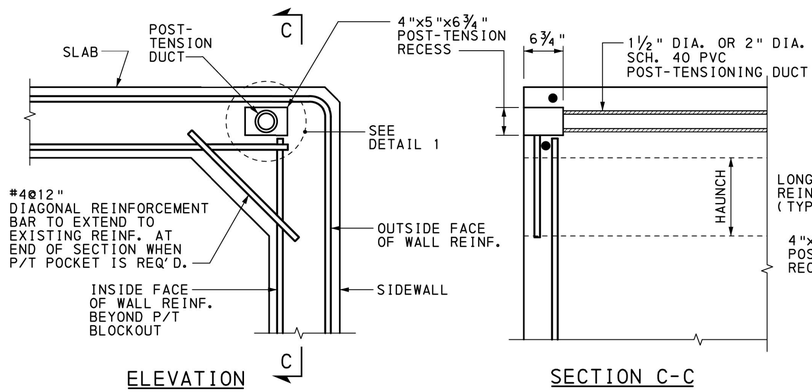

ELEVATION SECTION C-C

TYPICAL HAUNCH SECTION DETAIL

NOT TO SCALE

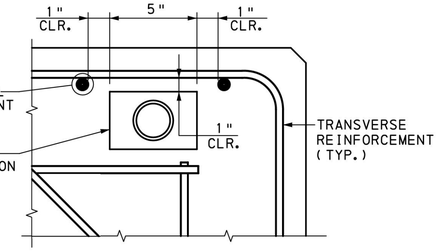

DETAIL 1

NOT TO SCALE

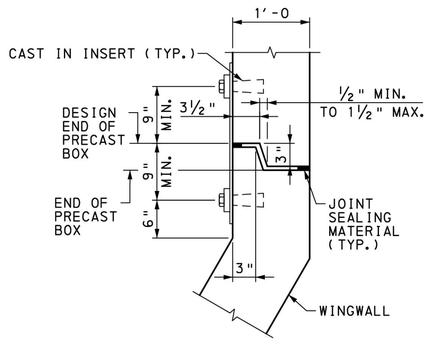

PRECAST WINGWALL CONNECTION DETAIL

NOT TO SCALE

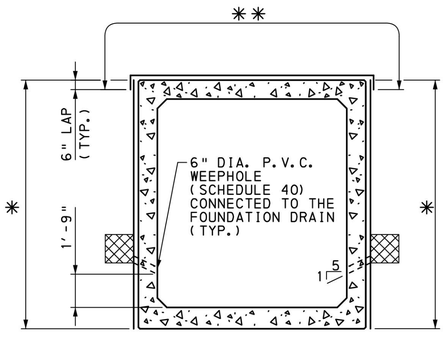

TYPICAL BOX SECTION WATERPROOFING DEATIL

NOT TO SCALE

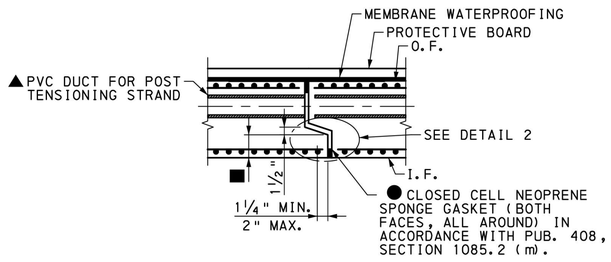

TYPICAL JOINT DETAIL

NOT TO SCALE

NOTES:

1. FOR GENERAL NOTES, SEE SHEET 2.
2. FOR STAKE-OUT PLAN, SEE SHEET 3.

LEGEND:

E.F.	EACH FACE
C.I.P.	CAST IN PLACE
O.F.	OUTSIDE FACE
I.F.	INSIDE FACE
*	LIMITS OF WATERPROOFING AND PROTECTION BOARD ON SIDE OF PRECAST BOX SECTION. WATERPROOFING AND PROTECTION BOARD ARE TO BE CONTINUOUS ALONG THE FULL LENGTH OF THE CULVERT AND OVERLAP THE HEADWALL AND END SECTION JOINT BY 6" MINIMUM. PLACE THIS BEFORE THE TOP SLAB WATERPROOFING IS PLACED.
**	LIMITS OF WATERPROOFING AND PROTECTION BOARD ON TOP SLAB OF PRECAST BOX SECTION. WATERPROOFING AND PROTECTION BOARD ARE TO BE CONTINUOUS ALONG THE FULL LENGTH OF THE CULVERT AND OVERLAP THE HEADWALL AND END SECTION JOINT BY 6" MINIMUM. SEE BC-788M FOR ADDITIONAL DETAILS.
■	> 3" WHEN WALL OR SLAB < 1'-3"
●	DESIGN TOTAL NEOPRENE WIDTH FOR THE CROSS-SECTION STRESS FROM POST-TENSION FORCES. DIVIDE TOTAL NEOPRENE WIDTH BETWEEN THE INSIDE AND OUTSIDE FACES. DIVIDE THE TOTAL WIDTH BY 2 AND ROUND TO THE NEAREST INCH.
▲	PLACE POST TENSION DUCTS WITHIN THE WALL OR SLAB ANYWHERE BETWEEN LAYERS OF REINFORCEMENT TO AVOID THE SLOPED PORTION OF THE JOINT SO AS TO PROMOTE SEALING OF THE DUCT.

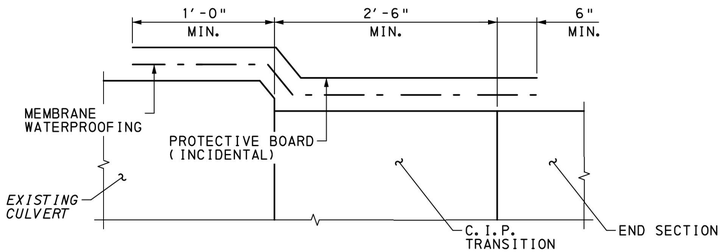

EXISTING CULVERT/C.I.P. TRANSITION WATERPROOFING DETAIL

NOT TO SCALE

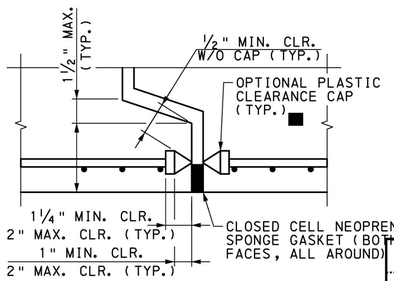

DETAIL 2

NOT TO SCALE

Mark	Description	By	Chk'd.	Recm'd.	Date
	REVISIONS				

CERTIFIED CORRECT PLANS
Donald R. Hillman
Professional Engineer
Approved by Bureau of Technical Utility Services
PA PUBLIC UTILITY COMMISSION
ATTEST Secretary

COMMONWEALTH OF PENNSYLVANIA
REGISTERED PROFESSIONAL
JONATHAN D. McHUGH
ENGINEER NO PE062291

COMMONWEALTH OF PENNSYLVANIA
DEPARTMENT OF TRANSPORTATION

WESTMORELAND COUNTY
S.R. 0070 SECTION E10
WHEELING & LAKE ERIE RAILROAD
STATION 5028+15.15 (MP C-17.01)
OVER CEDAR CREEK
PRECAST CONCRETE BOX CULVERT EXTENSION
PRECAST BOX DETAILS (2 OF 2)

RECOMMENDED February 3rd, 2022

SHEET 7 OF 18

DES: JDM | DWN: CMC | CHK: CTV

pw:\\gfnet-pw.bentley.com:gfnet-pw-01\Documents\Projects\61636\INPUT\COMP_01\CIVIL\BRDG\W&LE RR CULVERT\FINAL\SHT_07_PRECAST BOX DETAILS 2.dgn
1/4/2022 2:40:32 PM

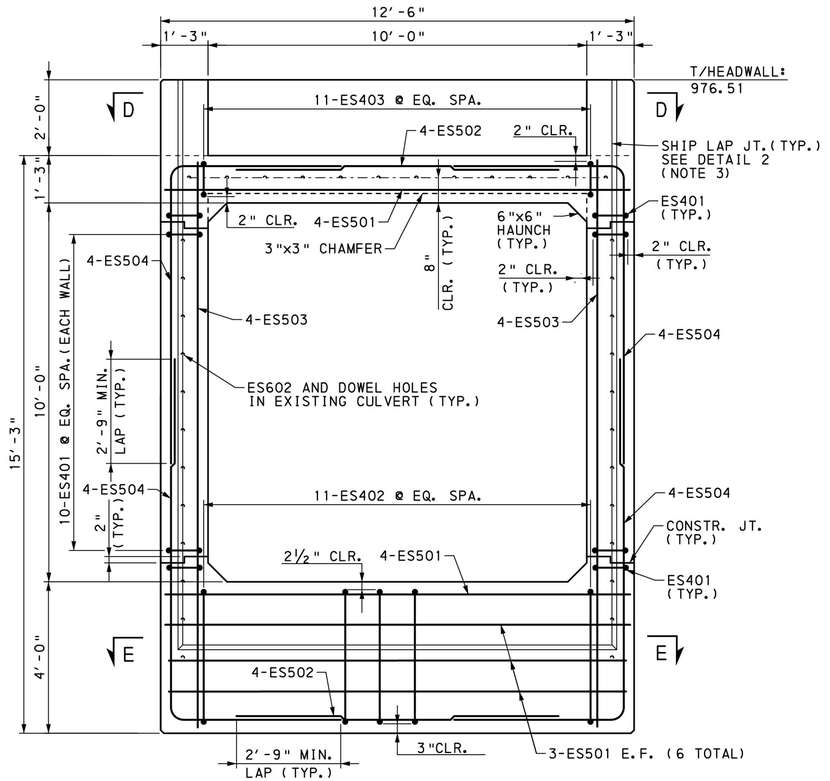

TYPICAL SECTION UPSTREAM TRANSITION SECTION

1' 0 1' 2'

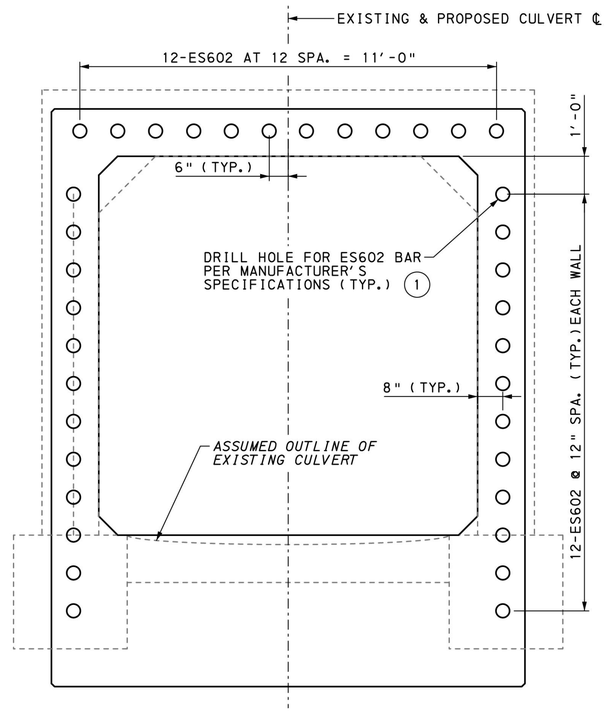

DOWEL HOLE LOCATIONS (2)(3)

1' 0 1' 2'

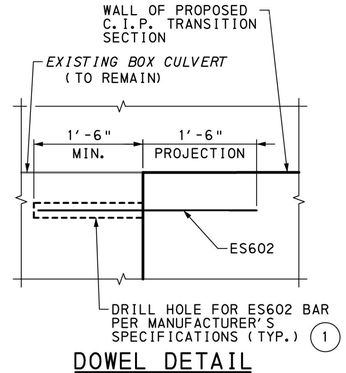

DOWEL DETAIL

NOT TO SCALE

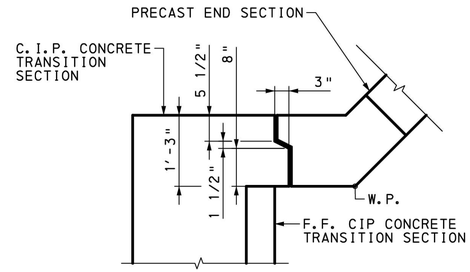

DETAIL 3- SHIP LAP JT.

12" 0 6" 12"

LEGEND:

E.F.	EACH FACE
I.F.	INSIDE FACE
O.F.	OUTSIDE FACE
C.I.P.	CAST IN PLACE

(1) PROVIDE DOWEL HOLES AS SHOWN, OR DRILL TO MANUFACTURER'S RECOMMENDED DIAMETER AND DEPTH AND EMBED WITH AN APPROVED NON-SHRINK GROUT LISTED IN BULLETIN 15.

(2) USE A PACHOMETER TO LOCATE EXISTING REINFORCEMENT PRIOR TO DRILLING DOWEL HOLES.

(3) CONFIRM DOWEL HOLE LOCATIONS IN THE FIELD BEFORE DRILLING TO ENSURE DOWELS WILL BE WITHIN THE LIMITS OF WALLS AND TOP/BOTTOM SLAB OF C.I.P. TRANSITION SECTION.

NOTES:

1. FOR REINFORCEMENT BAR SCHEDULE, SEE SHEET 13.
2. FOR FOUNDATION DATA, SEE SHEET 6.
3. FOR DETAIL 2, SEE SHEET 7.

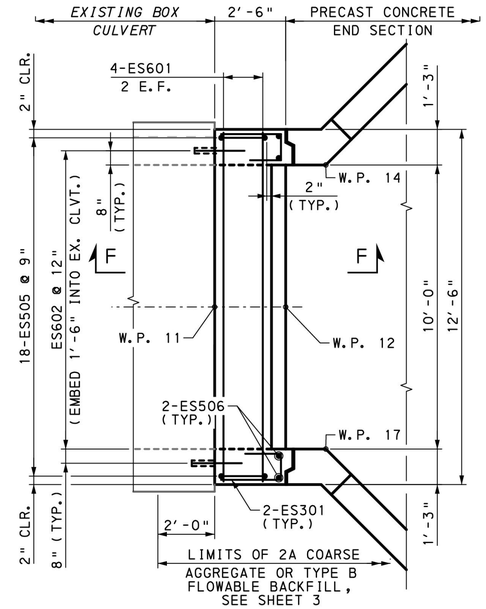

SECTION D-D

1' 0 1' 2' 3'

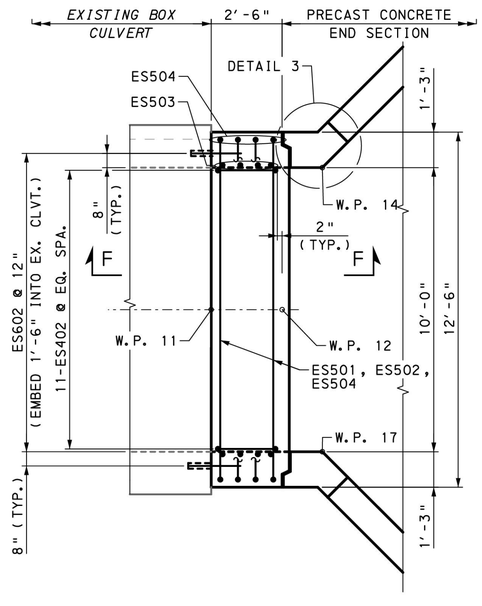

SECTION E-E

1' 0 1' 2' 3'

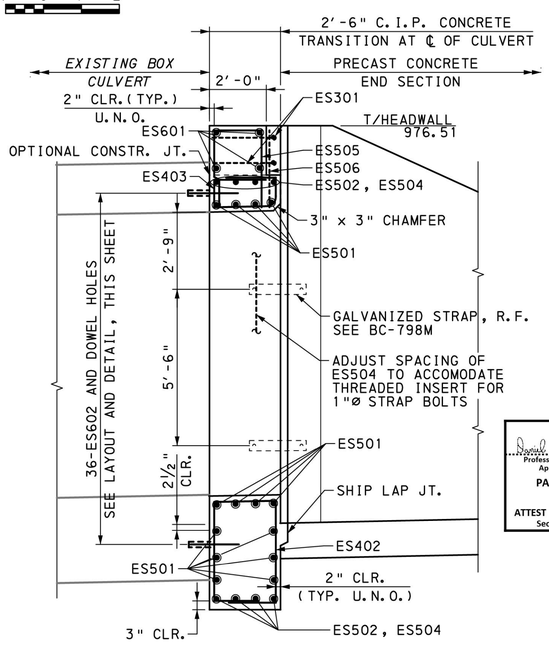

SECTION F-F

1' 0 1' 2' 3'

CERTIFIED CORRECT PLANS
Professional Engineer
Approved by Bureau of Technical Utility Services
PA PUBLIC UTILITY COMMISSION
ATTEST Secretary

COMMONWEALTH OF PENNSYLVANIA REGISTERED PROFESSIONAL JONATHAN D. McHUGH ENGINEER NO PE062299

Mark	Description	By	Chk'd.	Recm'd.	Date
REVISIONS					

COMMONWEALTH OF PENNSYLVANIA
DEPARTMENT OF TRANSPORTATION

WESTMORELAND COUNTY
S.R. 0070 SECTION E10
WHEELING & LAKE ERIE RAILROAD
STATION 5028+15.15 (MP C-17.01)
OVER CEDAR CREEK
PRECAST CONCRETE BOX CULVERT EXTENSION
CIP TRANSITION DETAILS-UPSTREAM

RECOMMENDED February 3rd, 2022

SHEET 8 OF 18

DES: JDM | DWN: JDM | CHK: CTV

pw:\\gfnet-pw.bentley.com:gfnet-pw-01\Documents\Projects\61636\INPUT\COMP_01\CIVIL\BRDGW&LE RR CULVERT\FINAL\SHT_08_CIP TRANSITION DETAILS 1 (UPSTREAM).dgn
1/4/2022 2:40:33 PM

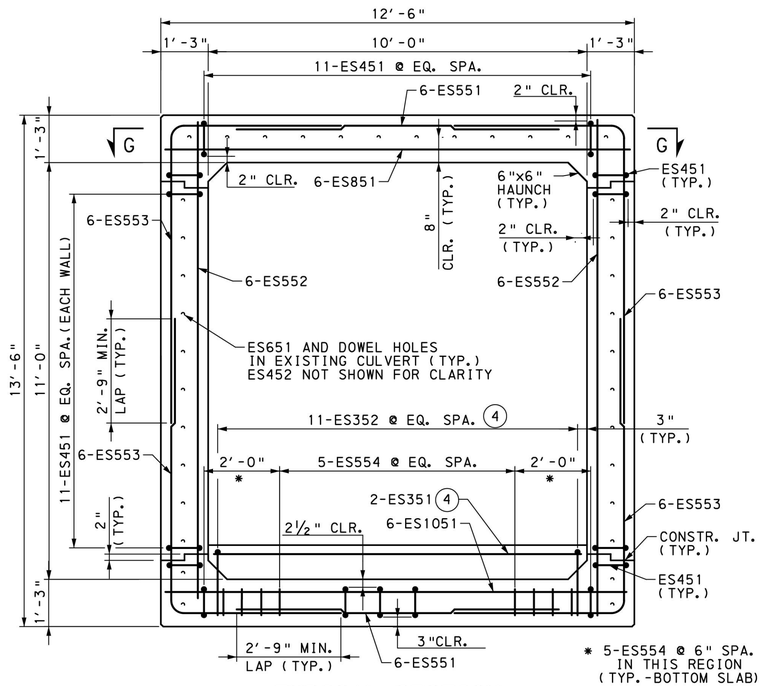

TYPICAL SECTION DOWNSTREAM TRANSITION SECTION

1' 0 1' 2'

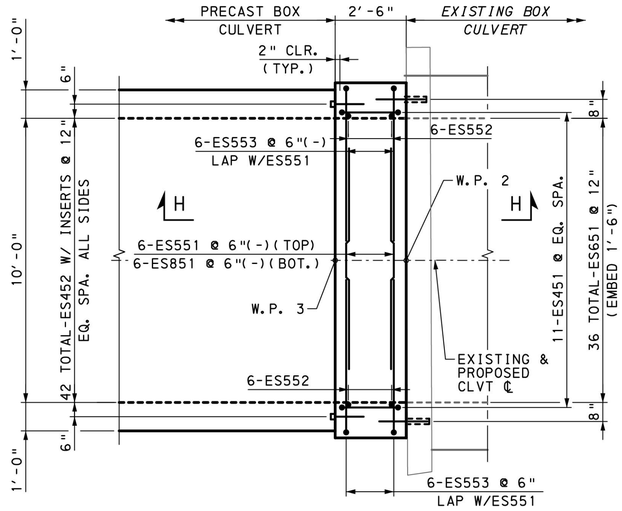

SECTION G-G

1' 0 1' 2' 3'

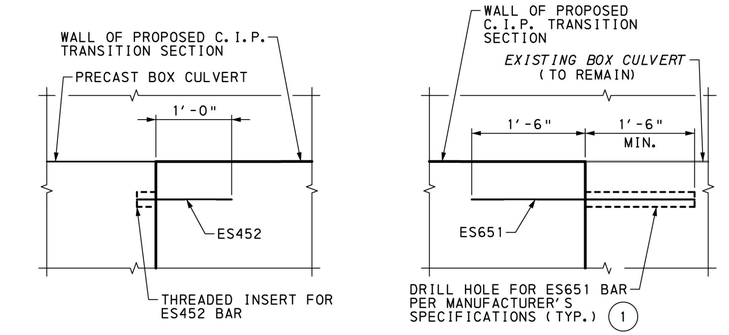

THREADED INSERT DETAIL

NOT TO SCALE

DOWEL DETAIL

NOT TO SCALE

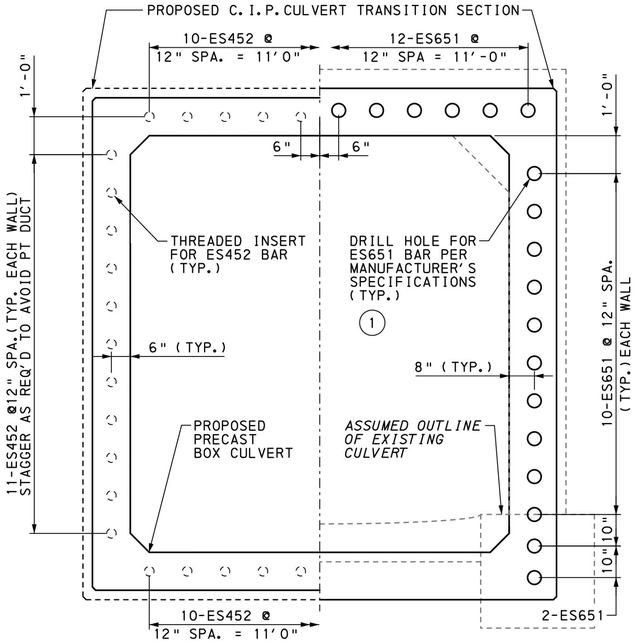

TREADED INSERT LOCATIONS

1' 0 1' 2'

DOWEL HOLE LOCATIONS (2)(3)

1' 0 1' 2'

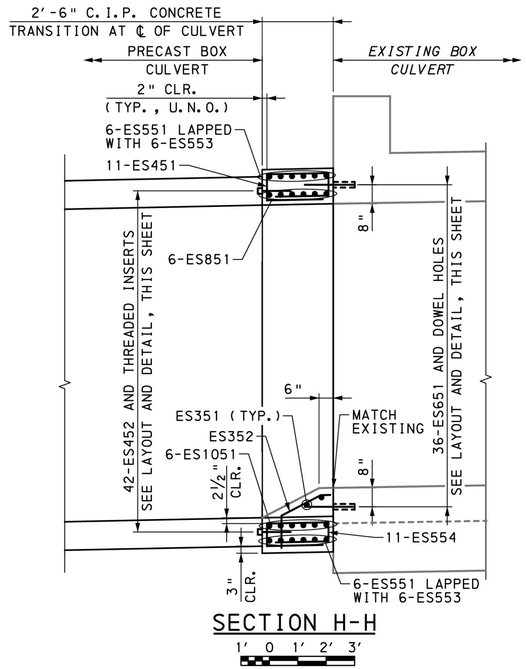

SECTION H-H

1' 0 1' 2' 3'

LEGEND:

E.F.	EACH FACE
I.F.	INSIDE FACE
O.F.	OUTSIDE FACE
C.I.P.	CAST IN PLACE
(1)	PROVIDE DOWEL HOLES AS SHOWN, OR DRILL TO MANUFACTURER'S RECOMMENDED DIAMETER AND DEPTH AND EMBED WITH AN APPROVED NON-SHRINK GROUT LISTED IN BULLETIN 15.
(2)	USE A PACHOMETER TO LOCATE EXISTING REINFORCEMENT PRIOR TO DRILLING DOWEL HOLES.
(3)	CONFIRM DOWEL HOLE LOCATIONS IN THE FIELD BEFORE DRILLING TO ENSURE DOWELS WILL BE WITHIN THE LIMITS OF WALLS AND TOP/BOTTOM SLAB OF C.I.P. TRANSITION SECTION.
(4)	VERIFY EXISTING CULVERT GEOMETRY. BEND AND CUT REINFORCEMENT AS REQUIRED TO FIT.

NOTES:

1. FOR REINFORCEMENT BAR SCHEDULE, SEE SHEET 13.
2. FOR FOUNDATION DATA, SEE SHEET 6.

Mark	Description	By	Chk'd.	Recm'd.	Date
REVISIONS					

CERTIFIED CORRECT PLANS
Donald R Hallinan
Professional Engineer
Approved by Bureau of Technical Utility Services
PA PUBLIC UTILITY COMMISSION
ATTEST Secretary

COMMONWEALTH OF PENNSYLVANIA
REGISTERED PROFESSIONAL
JONATHAN D. McHUGH
ENGINEER NO PE062299
COMMONWEALTH OF PENNSYLVANIA

COMMONWEALTH OF PENNSYLVANIA
DEPARTMENT OF TRANSPORTATION

WESTMORELAND COUNTY
S.R. 0070 SECTION E10
WHEELING & LAKE ERIE RAILROAD
STATION 5028+15.15 (MP C-17.01)
OVER CEDAR CREEK

PRECAST CONCRETE BOX CULVERT EXTENSION
CIP TRANSITION DETAILS-DOWNSTREAM

RECOMMENDED February 3rd, 2022

SHEET 9 OF 18

DES: JDM | DWN: JDM | CHK: CTV

pw:\\gfnet-pw.bentley.com:gfnet-pw-01\Documents\Projects\61636\INPUT\COMP_01\CIVIL\BRDG\W&LE RR CULVERT\FINAL\SHT_09_CIP TRANSITION DETAILS 2 (DOWNSTREAM).dgn
1/4/2022 2:40:34 PM

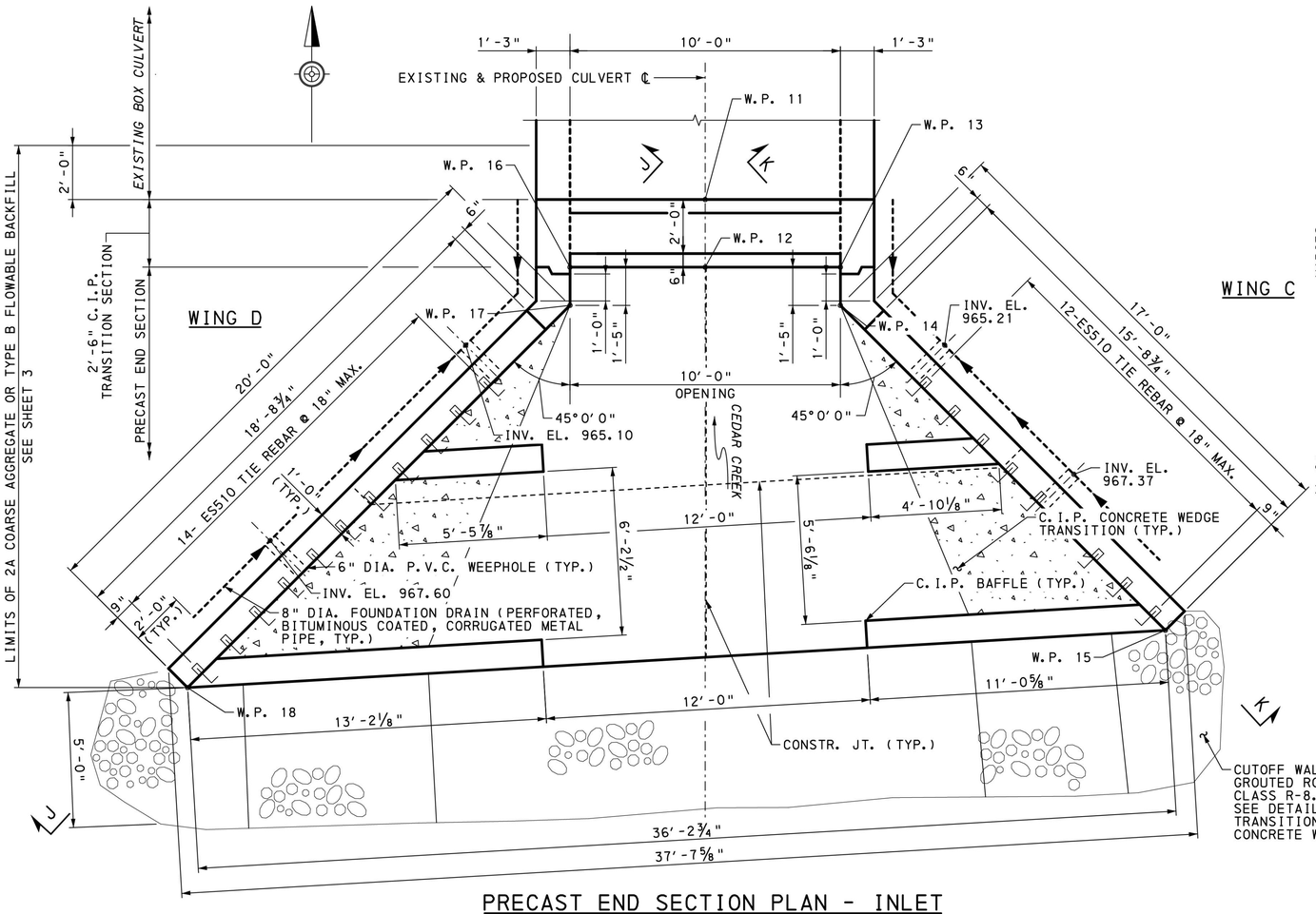

PRECAST END SECTION PLAN - INLET

1' 0 1' 2' 3'

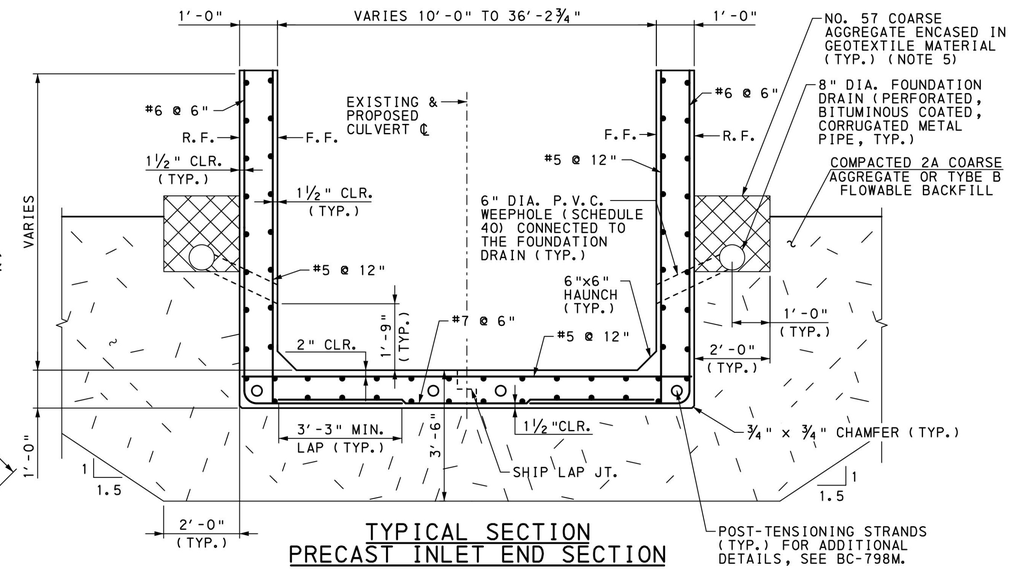

TYPICAL SECTION PRECAST INLET END SECTION

1' 0 1' 2'

LEGEND:

E.F.	EACH FACE
F.F.	FRONT FACE
R.F.	REAR FACE
C.I.P.	CAST IN PLACE
W.P.	WORK POINT
---◄---	FOUNDATION DRAIN DIRECTION OF SLOPE

NOTES:

1. NO BOLT THROUGH CONNECTIONS CAN BE USED.
2. ONLY SLIP LAP JOINTS CAN BE USED. NO FLUSH BUTT JOINTS.
3. ONE (1) ROW OF JOINT SEALING FLEXIBLE FOAM MATERIAL EACH FACE.
4. FOR FOUNDATION DESIGN DATA, SEE SHEET 6.
5. GEOTEXTILE IS INCIDENTAL TO NO. 57 COARSE AGGREGATE.

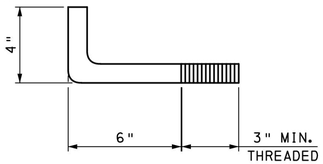

ES510 TIE BAR DETAIL

3" 0 3"

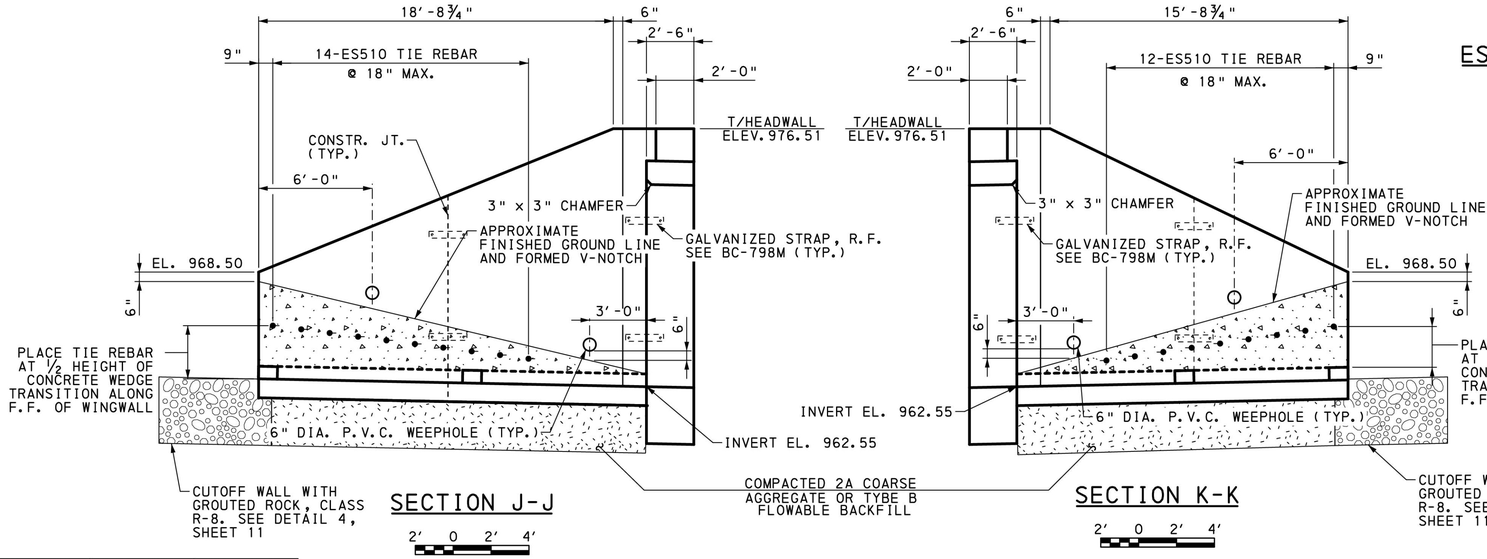

SECTION J-J

2' 0 2' 4'

SECTION K-K

2' 0 2' 4'

CERTIFIED CORRECT PLANS
Professional Engineer
Approved by Bureau of Technical Utility Services
PA PUBLIC UTILITY COMMISSION
ATTEST Secretary

Mark	Description	By	Chk'd.	Recm'd.	Date
REVISIONS					

COMMONWEALTH OF PENNSYLVANIA
REGISTERED PROFESSIONAL
JONATHAN D. McHUGH
ENGINEER NO PE062299

DEPARTMENT OF TRANSPORTATION

WESTMORELAND COUNTY
S.R. 0070 SECTION E10
WHEELING & LAKE ERIE RAILROAD
STATION 5028+15.15 (MP C-17.01)
OVER CEDAR CREEK

PRECAST CONCRETE BOX CULVERT EXTENSION
PRECAST INLET DETAILS

RECOMMENDED February 3rd, 2022

SHEET 10 OF 18

DES: JDM | DWN: CMC | CHK: CTV

\\gfnet-pw\gfnet-pw.bentley.com\gfnet-pw-01\Documents\Projects\61636\INPUT\COMP_01\CIVIL\BRDG\W&LE RR CULVERT\FINAL\SHT_10_PRECAST INLET DETAILS.dgn
1/4/2022 2:40:36 PM

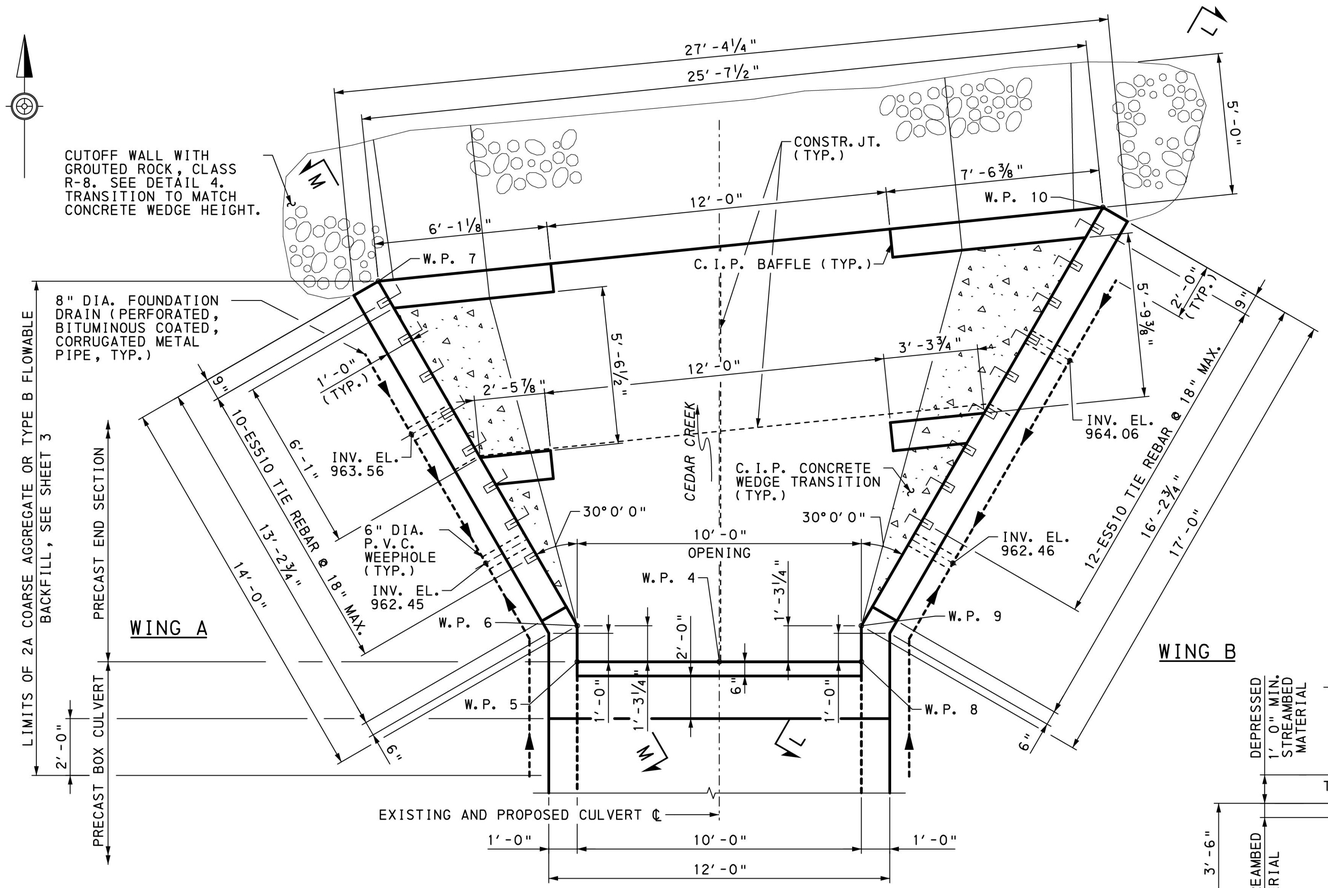

PRECAST END SECTION PLAN - OUTLET

1′ 0 1′ 2′ 3′

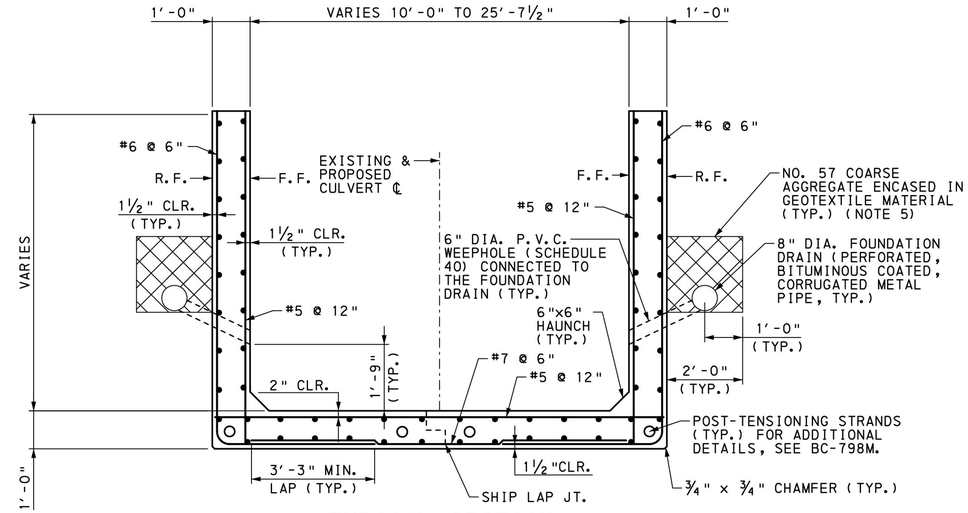

TYPICAL SECTION PRECAST OUTLET END SECTION

1′ 0 1′ 2′

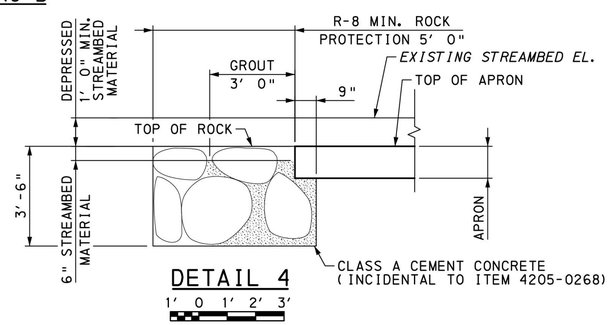

DETAIL 4

1′ 0 1′ 2′ 3′

LEGEND:

E.F.	EACH FACE
F.F.	FRONT FACE
R.F.	REAR FACE
C.I.P.	CAST IN PLACE
W.P.	WORK POINT
---◄---	FOUNDATION DRAIN DIRECTION OF SLOPE

NOTES:

1. NO BOLT THROUGH CONNECTIONS CAN BE USED.
2. ONLY SLIP LAP JOINTS CAN BE USED. NO FLUSH BUTT JOINTS.
3. ONE (1) ROW OF JOINT SEALING FLEXIBLE FOAM MATERIAL EACH FACE.
4. FOR FOUNDATION DESIGN DATA, SEE SHEET 6.
5. GEOTEXTILE IS INCIDENTAL TO NO. 57 COARSE AGGREGATE.

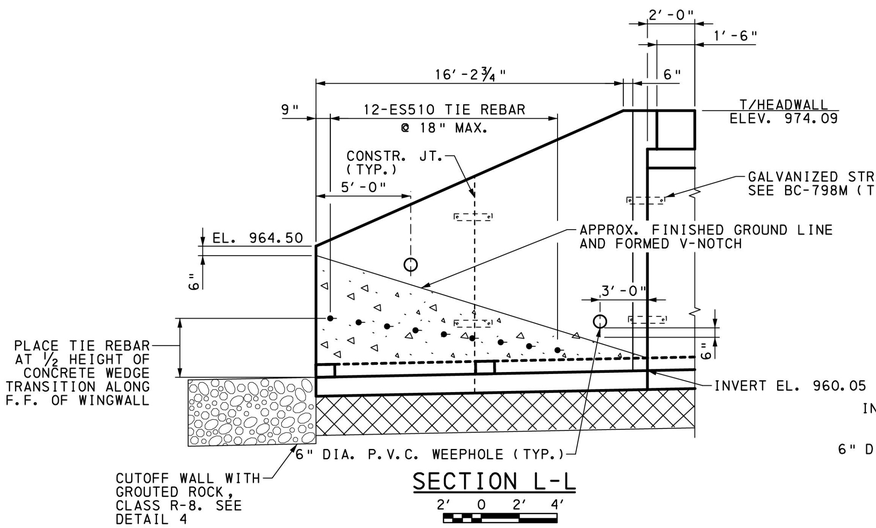

SECTION L-L

2′ 0 2′ 4′

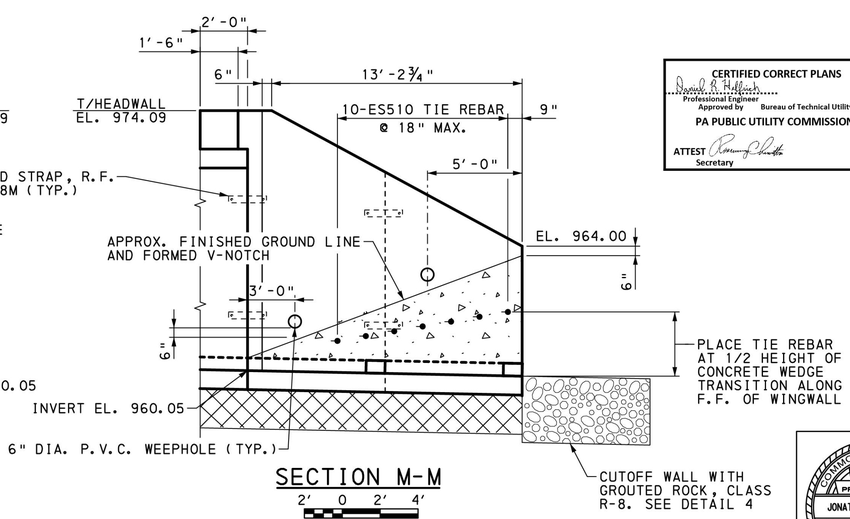

SECTION M-M

2′ 0 2′ 4′

CERTIFIED CORRECT PLANS
Professional Engineer
Approved by Bureau of Technical Utility Services
PA PUBLIC UTILITY COMMISSION
ATTEST Secretary

Mark	Description	By	Chk'd.	Recm'd.	Date
REVISIONS					

COMMONWEALTH OF PENNSYLVANIA
REGISTERED PROFESSIONAL
JONATHAN D. McHUGH
ENGINEER NO PE062299
COMMONWEALTH OF PENNSYLVANIA

COMMONWEALTH OF PENNSYLVANIA
DEPARTMENT OF TRANSPORTATION

WESTMORELAND COUNTY
S.R. 0070 SECTION E10
WHEELING & LAKE ERIE RAILROAD
STATION 5028+15.15 (MP C-17.01)
OVER CEDAR CREEK

PRECAST CONCRETE BOX CULVERT EXTENSION
PRECAST OUTLET DETAILS

RECOMMENDED February 3rd, 2022

SHEET 11 OF 18

DES: JDM | DWN: CMC | CHK: CTV

pw:\\gfnet-pw.bentley.com:gfnet-pw-01\Documents\Projects\61636\INPUT\COMP_01\CIVIL\BRDG\W&LE RR CULVERT\FINAL\SHT_11_PRECAST OUTLET DETAILS.dgn
1/24/2022 2:40:38 PM

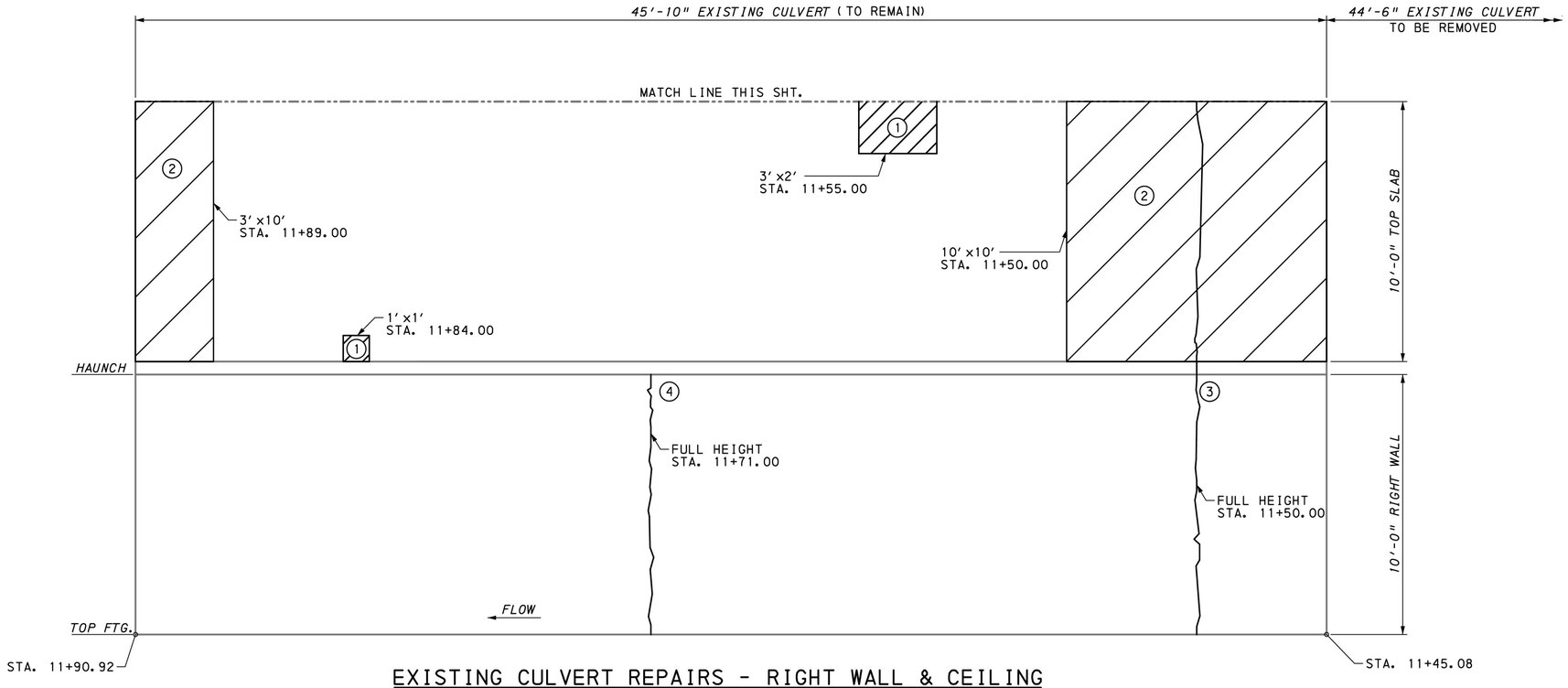

EXISTING CULVERT REPAIRS - RIGHT WALL & CEILING

NOT TO SCALE

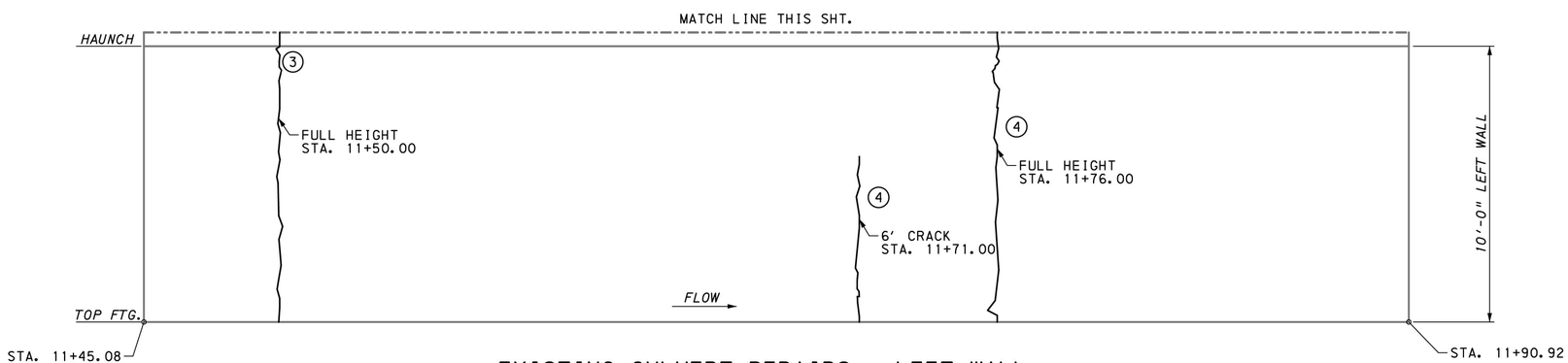

EXISTING CULVERT REPAIRS - LEFT WALL

NOT TO SCALE

NOTES:

1. ALL STATIONS ARE APPROXIMATE AND TAKEN AT APPROXIMATE CENTER OF REPAIR AREA.
2. LIMITS OF CRACKS AND SPALLS SHOWN ARE APPROXIMATE. COORDINATE WITH THE REPRESENTATIVE ON FINAL REPAIR LIMITS.
3. SEE BC-783M AND SPECIAL PROVISIONS FOR REPAIR REQUIREMENTS.

LEGEND:

① LIMITS OF TYPE 1 CONCRETE REPAIR (ITEM 9000-0921)

② LIMITS OF TYPE 2 CONCRETE REPAIR (ITEM 9000-0921)

③ EPOXY INJECTION CRACK SEAL (ITEM 1091-0331)

④ CRACK SEALING REPAIR (ITEM 9000-0922)

Mark	Description	By	Chk'd.	Recm'd.	Date
REVISIONS					

CERTIFIED CORRECT PLANS
Professional Engineer Approved by Bureau of Technical Utility Services
PA PUBLIC UTILITY COMMISSION
ATTEST Secretary

COMMONWEALTH OF PENNSYLVANIA
REGISTERED PROFESSIONAL
JONATHAN D. McHUGH
ENGINEER NO PE062299

COMMONWEALTH OF PENNSYLVANIA
DEPARTMENT OF TRANSPORTATION

WESTMORELAND COUNTY
S.R. 0070 SECTION E10
WHEELING & LAKE ERIE RAILROAD
STATION 5028+15.15 (MP C-17.01)
OVER CEDAR CREEK

PRECAST CONCRETE BOX CULVERT EXTENSION
PRESERVATION DETAILS

RECOMMENDED February 3rd, 2022

SHEET 12 OF 18

DES: JDM | DWN: CMC | CHK: CTV

pw:\\gfnet-pw.bentley.com:gfnet-pw-01\Documents\Projects\61636\INPUT\COMP_01\CIVIL\BRDG\W&LE RR CULVERT\FINAL\SHT_12_PRESERVATION DETAILS.dgn
1/4/2022 2:40:39 PM

BOX CULVERT

MARK	SIZE	NUMBER	LENGTH	TYPE	A	B	C	D	E	F/R	G	H	J	K	REMARKS
UPSTREAM TRANSITION															
ES301	3	4	4′-2"	17		2′-2"	11"	1′-1"							
ES401	4	24	7′-2"	T1	6"	11"	2′-2"	11"	2′-2"		6"				
ES402	4	11	12′-4"	T1	6"	2′-2"	3′-6"	2′-2"	3′-6"		6"				
ES403	4	11	7′-2"	T1	6"	11"	2′-2"	11"	2′-2"		6"				BEND 6" R FOR CHAMFER
ES501	5	14	12′-2"	STR											
ES502	5	8	8′-6"	STR											
ES503	5	8	14′-10"	STR											
ES504	5	16	13′-4"	17		8′-10"	4′-6"								
ES505	5	18	7′-0"	17		2′-8"	1′-8"	2′-8"							
ES506	5	4	2′-8"	STR											
ES601	6	4	12′-2"	STR											
ES602	6	36	3′-0"	STR											DOWEL BARS
DOWNSTREAM TRANSITION															
ES351	3	2	9′-6"	STR											BEND AND CUT IN FIELD
ES352	3	11	3′-3"	STR											BEND AND CUT IN FIELD
ES451	4	37	7′-2"	T1	6"	11"	2′-2"	11"	2′-2"		6"				
ES452	4	42	1′-3"	STR											THREAD 1 END 3"
ES551	5	12	8′-6"	STR											
ES552	5	12	13′-1"	STR											
ES553	5	24	12′-7"	17		8′-1"	4′-6"								
ES554	5	15	7′-2"	T1	6"	11"	2′-2"	11"	2′-2"		6"				
ES651	6	36	3′-0"	STR											DOWEL BARS
ES851	8	6	12′-2"	STR											
ES1051	10	6	12′-2"	STR											
HEADWALL															
EC301	3	4	2′-11"	17		1′-5"	8"	10"							
EC501	5	38	2′-1"	STR											THREAD 1 END 3"
EC502	5	17	2′-6"	17		8"	1′-2"	8"							
EC601	6	4	11′-8"	STR											
END SECTION TIE BARS															
ES510	5	48	1′-1"	17		9"	4"								THREAD 1 END 3"

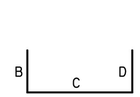

(17)

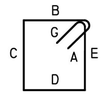

(T1)

BAR MARK LEGEND

ES501

- EPOXY COATED
- CODE LETTER
- SIZE
- NUMBERING

CODE LETTERS FOR BAR MARKS

C = CULVERT
S = STRUCTURE

NOTES:

ALL DIMENSIONS ARE OUT-TO-OUT OF BAR EXCEPT "A" AND "G" ON STANDARD 180° AND 135° HOOKS.

"J" DIMENSIONS ON 180° HOOKS ONLY WHERE NECESSARY TO RESTRICT HOOK SIZE, OTHERWISE STANDARD HOOK SIZES ARE REQUIRED.

FIGURES IN CIRCLES SHOW TYPES.

FOR REINFORCEMENT BAR FABRICATION DETAILS, REFER TO STANDARD DRAWING BC-736M.

Mark	Description	By	Chk'd.	Recm'd.	Date
REVISIONS					

CERTIFIED CORRECT PLANS
Daniel A. Hilferty
Professional Engineer
Approved by Bureau of Technical Utility Services
PA PUBLIC UTILITY COMMISSION
ATTEST Secretary

COMMONWEALTH OF PENNSYLVANIA
REGISTERED PROFESSIONAL
JONATHAN D. McHUGH
ENGINEER NO PE062299

COMMONWEALTH OF PENNSYLVANIA
DEPARTMENT OF TRANSPORTATION

WESTMORELAND COUNTY
S.R. 0070 SECTION E10
WHEELING & LAKE ERIE RAILROAD
STATION 5028+15.15 (MP C-17.01)
OVER CEDAR CREEK
PRECAST CONCRETE BOX CULVERT EXTENSION
REINFORCEMENT BAR SCHEDULE

RECOMMENDED February 3rd, 2022

SHEET 13 OF 18

DES: JDM | DWN: CMC | CHK: CTV

pw:\\gfnet-pw.bentley.com:gfnet-pw-01\Documents\Projects\61636\INPUT\COMP_01\CIVIL\BRDGW&LE RR CULVERT\FINAL\SHT_13_BAR SCHEDULE.dgn
1/4/2022 2:40:40 PM

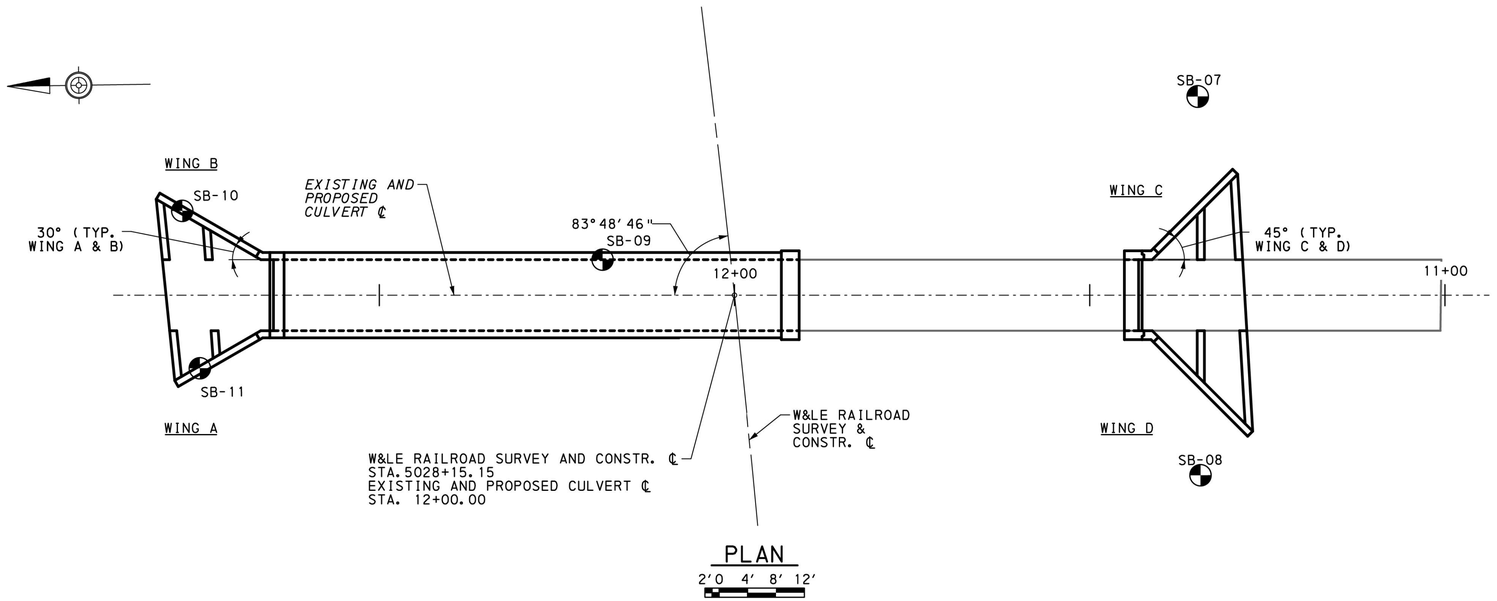

PLAN

2'0 4' 8' 12'

GENERAL NOTES:

THIS SHEET IS INCLUDED FOR THE CONVENIENCE OF THE DEPARTMENT. REFER TO PUBLICATION 408 SECTION 102.05 FOR FURTHER INFORMATION.

FOR ADDITIONAL SOIL AND ROCK DESCRIPTIONS SEE PUBLICATION 222.

THE BORING LOGS AND RELATED INFORMATION DEPICT SUBSURFACE CONDITIONS ONLY AT THE SPECIFIC LOCATIONS AND DATES INDICATED. SUBSURFACE CONDITIONS MAY DIFFER FROM THE CONDITIONS REPORTED AT THE SPECIFIC LOCATIONS. ALSO, THE PASSAGE OF TIME MAY RESULT IN A CHANGE OF CONDITIONS AT THE BORING LOCATIONS.

LEGEND:

- STRUCTURE BORINGS

THE INFORMATION, AS SUBMITTED, ACCURATELY REPRESENTS THE CONDITIONS ENCOUNTERED BY THE TEST BORING PROGRAM, INCLUDING BORING LOGS, EARTH SAMPLES, ROCK CORES, CLASSIFICATION OF MATERIALS, & DEPTH OF BORINGS.

Matthew B. Morris 1-4-22

GEOTECHNICAL ENGINEER DATE

THE INFORMATION PROVIDED IS REPRESENTATIVE OF SUBSURFACE CONDITIONS ONLY AT THE LOCATIONS AND DEPTHS WHERE SUCH INFORMATION WAS OBTAINED, AND THERE IS NO EXPRESSED OR IMPLIED AGREEMENT THAT UNIFORMITY OF MATERIALS EXISTS BETWEEN EXPLORED LOCATIONS.
(SEE PUBLICATION 408/2020, SECTION 102.05.)

Mark	Description	By	Chk'd.	Recm'd.	Date
REVISIONS					

CERTIFIED CORRECT PLANS
Professional Engineer
Approved by Bureau of Technical Utility Services
PA PUBLIC UTILITY COMMISSION
ATTEST Secretary

COMMONWEALTH OF PENNSYLVANIA
REGISTERED
PROFESSIONAL
MATTHEW BROOKS MORRIS
GEOLOGIST
PG004584
COMMONWEALTH OF PENNSYLVANIA

COMMONWEALTH OF PENNSYLVANIA
DEPARTMENT OF TRANSPORTATION

WESTMORELAND COUNTY
S.R. 0070 SECTION E10
WHEELING & LAKE ERIE RAILROAD
STATION 5028+15.15 (MP C-17.01)
OVER CEDAR CREEK
PRECAST CONCRETE BOX CULVERT EXTENSION
STRUCTURE BORINGS LOCATION PLAN

RECOMMENDED

Greg A. Painter 1/18/2022

DISTRICT GEOTECHNICAL ENGINEER

SHEET 14 OF 18

DES: AGR | DWN: JMB | CHK: JDM

pw:\\gfnet-pw.bentley.comgfnet-pw-01\Documents\Projects\61636\INPUT\COMP_01\CIVIL\BRDG\W&LE RR CULVERT\FINAL\SHT_14_BORING PLAN.dgn
1/4/2022 2:40:43 PM

SUBSTRUCTURE UNIT:

WINGWALL C/BOX CULVERT INLET

LOG 1 OF 1

BORING NUMBER:	BORING LOCATION	START: 08/04/2020 11:15 AM	HAMMER: AUTOMATIC
SB-7	STATION: 783+34.0 OFFSET: 383.0 FT. LT.	FINISH: 08/04/2020 4:00 PM	EFFICIENCY: 0.8 ERa

DRILLING METHOD AND EQUIPMENT:	SIZE OF CORE:	VERTICAL SCALE:	TOP OF BORING ELEVATION:
DOUBLE TUBE WIRE LINE-NQ, AUTOMATIC, CME 750	1.874 IN.	0 FT. 5 FT.	995.0 FT.

DRILLING INSPECTOR: STEPHANIE CHECHAK
DRILLER & DRILLING COMPANY: DOUG SHOPE
7NT

▽ 0 HR. READING - ELAPSED TIME: El. 963.3 ft. - 0.3 hr.
▼ 24 HR. READING - ELAPSED TIME: El. 964.1 ft. - 18.5 hr.

ELEV.	GRAPHIC	MATERIAL DESCRIPTION	AASHTO/ USCS	SAMPLE DEPTH	SAMPLE NO.	BLOW COUNT / PP/T TSF	N 60 / %RQD	REC (ft.)	REC (%)	◇ RQD % ◇ ⊙ Soil/Rock Rec. % ⊙ ▲ SPT (N_{60}) ▲
995										20 40 60 80 / 10 20 30 40
990		**SAND** and **SILT**, some Gravel, trace Clay, very loose to dense, dry to damp, heterogeneous, non-plastic, brown and gray, fill, *Sand is fine to coarse, gravel is angular, colors also include black and orange, clay content increases with depth.*	a-1-b / sm	1.5	S-1	2-3-2	7	1.3	87	
				3.0	S-2	4-3-3	8	1.3	87	
				4.5	S-3	3-3-2	7	1.1	73	
				6.0	S-4	4-4-5	12	1.4	93	
				7.5	S-5	3-2-2	5	1.2	80	
				9.0	S-6	5-7-4	15	1.5	100	
985				10.5	S-7	7-8-8	21	1.3	87	
				12.0	S-8	8-5-5	13	1.5	100	
				13.5	S-9	6-8-6	19	1.4	93	
				15.0	S-10	6-18-7	33	1.5	100	
				16.5	S-11	4-4-32	48	1.5	100	
				18.0	S-12	14-6-7	17	1.5	100	
				19.5	S-13	5-6-6	16	1.4	93	
980				21.0	S-14	5-5-6	15	1.5	100	
				22.5	S-15	4-4-3	9	1.5	100	
				24.0	S-16	7-3-4	9	1.5	100	
				25.5	S-17	5-4-3	9	1.5	100	
		26.5'/El. 968.5								
		CLAY and **SILT**, some Sand, trace Gravel, medium to stiff, damp, heterogeneous, medium plastic fines, gray and tan, fill, *Sand is fine to coarse, colors also include brown.*	a-4 / cl-ml	27.0	S-18	2-2-2	5	1.1	73	
		28.0'/El. 967.0								
975		**SAND**, little Clay, little Gravel, little Silt, loose, damp, heterogeneous, medium plastic fines, gray and tan, fill, *auger refusal at 30.5', Sand is fine to coarse, colors also include brown.* 30.5'/El. 964.5 *S-21 - Small piece of residual gravel, too little sample to classify.*	a-2-4 / sc-sm	28.5	S-19	3-3-4 **1.50**	9	1.5	100	
				30.0	S-20	4-4-5 **1.50**	12	1.5	100	
				30.1	S-21	>67		0.1	100	
				30.5	A-1	50/.1'				
				32.7	R-1		18%	1.4	64	
					R-2		20%	1.8	90	
970				34.7						
					R-3		36%	5.0	100	
				39.7						
					R-4		17%	2.1	72	
965										
		LIMESTONE, light gray to gray, medium hard, slightly weathered, thin to narrow bedding with flat dip, fracture zone, narrow to moderate spacing, *Colors also include bluish-gray, iron staining at some fractures, bedding dip RD = 0, fracture spacing RD = 0 - 90, Unit RQD = 26%.* *30.5' - 31.2' - Broken zone - likely area of lost recovery, vertical fractures.* *34.9' - 35.0' - Small carbonaceous shale seams.* *36.6' - 36.7" - Small carbonaceous shale seams.* *37.1' - 38.2' - 45 deg fractures.* *39.7' - 39.9' - 90 deg fractures.* *40.0' - 40.1' - Small very weathered claystone seams, likely zones of lost recovery.*									
		42.6'/El. 952.4								
		41.9' - 42.0' - Small very weathered claystone seams, likely zones of lost recovery. *42.3' - 42.6' - 90 deg fractures.* *42.5' - 42.6' - Small very weathered claystone seams, likely zones of lost recovery.*								
960										
955										

BFE 961.42

SUBSTRUCTURE UNIT:

WINGWALL D/BOX CULVERT INLET

LOG 1 OF 1

BORING NUMBER:	BORING LOCATION	START: 08/03/2020 12:15 PM	HAMMER: AUTOMATIC
SB-8	STATION: 783+59.0 OFFSET: 431.3 FT. LT.	FINISH: 08/03/2020 4:00 PM	EFFICIENCY: 0.8 ERa

DRILLING METHOD AND EQUIPMENT:	SIZE OF CORE:	VERTICAL SCALE:	TOP OF BORING ELEVATION:
DOUBLE TUBE WIRE LINE-NQ, AUTOMATIC, CME 750	1.874 IN.	0 FT. 5 FT.	996.0 FT.

DRILLING INSPECTOR: STEPHANIE CHECHAK
DRILLER & DRILLING COMPANY: DOUG SHOPE
7NT

▽ 0 HR. READING - ELAPSED TIME: El. 965.3 ft. - 0.5 hr.
▼ 24 HR. READING - ELAPSED TIME: El. 963.3 ft. - 16.0 hr.

ELEV.	GRAPHIC	MATERIAL DESCRIPTION	AASHTO/ USCS	SAMPLE DEPTH	SAMPLE NO. **	BLOW COUNT / PP/T TSF	N 60 / %RQD	REC (ft.)	REC (%)	◇ RQD % ◇ ⊙ Soil/Rock Rec. % ⊙ ▲ SPT (N_{60}) ▲
995										20 40 60 80 / 10 20 30 40
990		**SAND**, some Silt, little Gravel, little Clay, very loose to dense, dry to damp, heterogeneous, gray and brown, fill, *Sand is fine to coarse, gravel is angular and primarily shale, colors also include orange and black, clay content increases with depth and gravel content fluctuates.*	a-1-b / sm	1.5	S-1	2-2-3	7	0.9	60	
				3.0	S-2	4-5-5	13	1.4	93	
				4.5	S-3	4-4-4	11	1.3	87	
				6.0	S-4	3-4-4	11	1.5	100	
				7.5	S-5	3-3-5	11	1.3	87	
				9.0	S-6	2-2-2	5	1.4	93	
985				10.5	S-7	2-3-3	8	1.1	73	
				12.0	S-8	4-4-5	12	1.5	100	
				13.5	S-9	5-32-9	55	1.5	100	
				15.0	S-10	4-6-6	16	1.3	87	
				16.5	S-11	9-8-4	16	1.3	87	
				18.0	S-12	5-5-6	15	1.5	100	
				19.5	S-13	4-3-3	8	1.0	67	
980				21.0	S-14	4-4-3	9	1.5	100	
				22.5	S-15	3-3-3	8	1.4	93	
				24.0	S-16	3-4-5	12	1.5	100	
				25.5	S-17	3-5-4	12	1.5	100	
		31.5'/El. 964.5								
		CLAY, some Silt, some Sand, trace Gravel, very dense, dry, homogeneous, angular, gray, residuum, *auger refusal at 33.5'.* 33.5'/El. 962.5	A-6 / CL	27.0	S-18	5-5-6	15	1.4	93	
				28.5	S-19	6-5-5	13	1.5	100	
975				30.0	S-20	5-4-6	13	1.5	100	
				31.5	S-21	5-6-12	24	1.4	93	
				32.3	S-22	27-50/.3'	>67	0.8	100	
				33.0	A-1					
				33.1	S-23	50/.1'	>67	0.1	100	
				33.5	A-2		42%	1.2	100	
				34.7	R-1					
					R-2		54%	5.0	100	
				39.7						
					R-3		32%	4.4	88	
970										
		LIMESTONE, light gray to gray, medium hard, fresh to slightly weathered, thin to narrow bedding with flat dip, fracture zone, narrow to medium spacing, *Colors also include bluish-gray, bedding dip RD = 0, fracture spacing RD = 0 to 90, Unit RQD = 46%, slight iron staining at fractures.* *36.0' - 36.4' - Broken zone.*								
		39.9' - 40.1' - Very soft claystone interbeds. 41.5'/El. 954.5								
		40.4' - 40.8' - Very soft claystone interbeds.								
965		**SANDSTONE interbedded with CLAYSTONE**, dark gray, medium hard, slightly weathered, thin to narrow bedding with flat dip, fracture zone, close to medium spacing, *Bedding dip RD = 0, fracture spacing RD = 0 - 90, Unit RQD = 34%.* *41.5' - 41.7' - Claystone interbeds are very soft and weathered.* 44.7'/El. 951.3								
		43.7' - 44.7' - Claystone interbeds are very soft and weathered.								
960										
955										

BFE 961.42

**SAMPLE NO. shading indicates lab testing performed.

GENERAL NOTES:

THIS SHEET IS INCLUDED FOR THE CONVENIENCE OF THE DEPARTMENT. REFER TO PUBLICATION 408 SECTION 102.05 FOR FURTHER INFORMATION.

FOR ADDITIONAL SOIL AND ROCK DESCRIPTIONS SEE PUBLICATION 222.

THE BORING LOGS AND RELATED INFORMATION DEPICT SUBSURFACE CONDITIONS ONLY AT THE SPECIFIC LOCATIONS AND DATES INDICATED. SUBSURFACE CONDITIONS MAY DIFFER FROM THE CONDITIONS REPORTED AT THE SPECIFIC LOCATIONS. ALSO, THE PASSAGE OF TIME MAY RESULT IN A CHANGE OF CONDITIONS AT THE BORING LOCATIONS.

LEGEND:

PP - POCKET PENETROMETER
T - TORVANE
RQD - ROCK QUALITY DESIGNATION
SPT - STANDARD PENETRATION TEST
BFE - BOTTOM OF FOOTING ELEVATION

▽ - DENOTES 0 HOUR GROUND WATER ELEVATION
▼ - DENOTES 24 HOUR GROUND WATER ELEVATION
{} - REMARKS

THE CLASSIFICATIONS OF THE MATERIAL ENCOUNTERED HAVE BEEN VERIFIED.

INITIAL

THE INFORMATION, AS SUBMITTED, ACCURATELY REPRESENTS THE CONDITIONS ENCOUNTERED BY THE TEST BORING PROGRAM, INCLUDING BORING LOGS, EARTH SAMPLES, ROCK CORES, CLASSIFICATION OF MATERIALS, & DEPTH OF BORINGS.

1-4-22
GEOTECHNICAL ENGINEER DATE

THE INFORMATION PROVIDED IS REPRESENTATIVE OF SUBSURFACE CONDITIONS ONLY AT THE LOCATIONS AND DEPTHS WHERE SUCH INFORMATION WAS OBTAINED, AND THERE IS NO EXPRESSED OR IMPLIED AGREEMENT THAT UNIFORMITY OF MATERIALS EXISTS BETWEEN EXPLORED LOCATIONS.
(SEE PUBLICATION 408/2020, SECTION 102.05.)

Mark	Description	By	Chk'd.	Recm'd.	Date
REVISIONS					

CERTIFIED CORRECT PLANS
Professional Engineer
Approved by Bureau of Technical Utility Services
PA PUBLIC UTILITY COMMISSION
ATTEST Secretary

COMMONWEALTH OF PENNSYLVANIA
REGISTERED PROFESSIONAL
MATTHEW BROOKS MORRIS
GEOLOGIST
PG004584
PENNSYLVANIA

COMMONWEALTH OF PENNSYLVANIA
DEPARTMENT OF TRANSPORTATION

WESTMORELAND COUNTY
S.R. 0070 SECTION E10
WHEELING & LAKE ERIE RAILROAD
STATION 5028+15.15 (MP C-17.01)
OVER CEDAR CREEK
PRECAST CONCRETE BOX CULVERT EXTENSION
STRUCTURE BORINGS 1

RECOMMENDED
1/18/2022
DISTRICT GEOTECHNICAL ENGINEER

SHEET 15 OF 18

DES: AGR | DWN: JMB | CHK: JDM

PENNDOT STRUCTURE BORING LOG - PENNDOT.GINT - VERSION 1.2.2.3, 8-21-2019.GDT - 1/6/21 08:58 - C:\USERS\AMERSON\DOCUMENTS\GINT\USER'S INTERCHANGE (V WITH LAB DATA.GPJ
pw:\\gfnet-pw.bentley.com:gfnet-pw-01\Documents\Projects\61636\INPUT\COMP_01\CIVIL\BRDG\W&LE RR CULVERT\FINAL\SHT15_CORE BORING 1.dgn
1/4/2022 2:40:45 PM

SUBSTRUCTURE UNIT:

BOX CULVERT EXTENSION

LOG 1 OF 1

BORING NUMBER:	BORING LOCATION	START: 07/29/2020 3:15 PM	HAMMER: AUTOMATIC
SB-9	STATION: 784+26.3 OFFSET: 368.6 FT. LT.	FINISH: 07/29/2020 4:00 PM	EFFICIENCY: 0.8 ERa

DRILLING METHOD AND EQUIPMENT:	SIZE OF CORE:	VERTICAL SCALE:	TOP OF BORING ELEVATION:
DOUBLE TUBE WIRE LINE-HQ, AUTOMATIC, CME 55 TRAILER	"NO RECORD"	0 FT. 5 FT.	964.0 FT.

DRILLING INSPECTOR: DAVID ROEBUCK
DRILLER & DRILLING COMPANY: FORREST SMITH
7NT

▽ 0 HR. READING - ELAPSED TIME: El. 964.0 ft. - 0.0 hr.
▼ 24 HR. READING - ELAPSED TIME: El. 963.0 ft. - 24.0 hr.

ELEV.	GRAPHIC	MATERIAL DESCRIPTION	AASHTO/ USCS	SAMPLE DEPTH	SAMPLE NO.	BLOW COUNT / PP/T TSF	N 60 / %RQD	REC (ft.)	REC (%)	◇ RQD % ◇ ⊙ Soil/Rock Rec. % ⊙ ▲ SPT (N_{60}) ▲
960		**LIMESTONE**, gray, hard, moderately weathered to slightly weathered, narrow to moderate bedding with flat dip, close to moderate spacing, sheer to shallow dip, narrow joint opening, open joints, *Unit RQD = 52%.*		2.1	R-1		33%	2.1	100	
BFE 958.95					R-2		53%	3.0	100	
955				5.1	R-3		60%	4.7	94	
		10.1'/El. 953.9								

NOTE: LOCATED IN STREAM. TOP OF BORING AT STREAM BED. OFFSET 6.5' WEST

SUBSTRUCTURE UNIT:

WINGWALL B/BOX CULVERT OUTLET

LOG 1 OF 1

BORING NUMBER:	BORING LOCATION	START: 07/27/2020 8:30 AM	HAMMER: AUTOMATIC
SB-10	STATION: 784+77.2 OFFSET: 337.7 FT. LT.	FINISH: 07/27/2020 4:00 PM	EFFICIENCY: 0.8 ERa

DRILLING METHOD AND EQUIPMENT:	SIZE OF CORE:	VERTICAL SCALE:	TOP OF BORING ELEVATION:
DOUBLE TUBE WIRE LINE-NQ, AUTOMATIC, CME 750	1.874 IN.	0 FT. 5 FT.	964.0 FT.

DRILLING INSPECTOR: STEPHANIE CHECHAK
DRILLER & DRILLING COMPANY: DOUG SHOPE
7NT

▽ 0 HR. READING - ELAPSED TIME: El. 962.6 ft. - 0.0 hr.
▼ 24 HR. READING - ELAPSED TIME: El. 961.0 ft. - 15.5 hr.

ELEV.	GRAPHIC	MATERIAL DESCRIPTION	AASHTO/ USCS	SAMPLE DEPTH	SAMPLE NO.	BLOW COUNT / PP/T TSF	N 60 / %RQD	REC (ft.)	REC (%)	◇ RQD % ◇ ⊙ Soil/Rock Rec. % ⊙ ▲ SPT (N_{60}) ▲
960		**SILT**, some Sand, trace Clay, very stiff, dry, heterogeneous, non-plastic, brown and gray, fill, *Sand is fine, trace coal.*	a-4 / ml	1.5	S-1	10-8-8	21	0.9	60	
		2.0'/El. 962.0			S-2	14-50-33	111	1.5	100	
BFE 958.95		**CLAY** and **GRAVEL**, some Sand, hard, dry, homogeneous, non-plastic, gray, residuum, *Gravel is angular, trace carbonaceous shale.*	a-6 / cl	3.0	S-3	50/.3"	>67	0.3	100	
		4.6'/El. 959.4		3.3	A-1					
955		**LIMESTONE**, light gray to dark gray, medium hard, fresh to slightly weathered, thin to narrow bedding with flat dip, fracture zone, narrow to medium spacing, *Bedding Dip RD = 0, Fracture Spacing RD = 0 - 90, Unit RQD = 23%.* *R-1 - Broken throughout.* *8.2' - 8.4' - Clay seam.* *8.8' - 9.0' - Vertical fracture.* *11.3' - 11.6' - Vertical fracture.*		4.5	S-4	50/.1"	>67	0.1	100	
				4.6	R-1		0%	1.4	100	
				6.0	R-2		0%	1.7	85	
				8.0	R-3		0%	2.0	100	
950				10.0	R-4		49%	4.5	92	
		14.9'/El. 949.1								

GENERAL NOTES:

THIS SHEET IS INCLUDED FOR THE CONVENIENCE OF THE DEPARTMENT. REFER TO PUBLICATION 408 SECTION 102.05 FOR FURTHER INFORMATION.

FOR ADDITIONAL SOIL AND ROCK DESCRIPTIONS SEE PUBLICATION 222.

THE BORING LOGS AND RELATED INFORMATION DEPICT SUBSURFACE CONDITIONS ONLY AT THE SPECIFIC LOCATIONS AND DATES INDICATED. SUBSURFACE CONDITIONS MAY DIFFER FROM THE CONDITIONS REPORTED AT THE SPECIFIC LOCATIONS. ALSO, THE PASSAGE OF TIME MAY RESULT IN A CHANGE OF CONDITIONS AT THE BORING LOCATIONS.

LEGEND:

PP - POCKET PENETROMETER
T - TORVANE
RQD - ROCK QUALITY DESIGNATION
SPT - STANDARD PENETRATION TEST
BFE - BOTTOM OF FOOTING ELEVATION

▽ - DENOTES 0 HOUR GROUND WATER ELEVATION
▼ - DENOTES 24 HOUR GROUND WATER ELEVATION
{} - REMARKS

THE CLASSIFICATIONS OF THE MATERIAL ENCOUNTERED HAVE BEEN VERIFIED.

INITIAL

THE INFORMATION, AS SUBMITTED, ACCURATELY REPRESENTS THE CONDITIONS ENCOUNTERED BY THE TEST BORING PROGRAM, INCLUDING BORING LOGS, EARTH SAMPLES, ROCK CORES, CLASSIFICATION OF MATERIALS, & DEPTH OF BORINGS.

GEOTECHNICAL ENGINEER — DATE 1-4-22

THE INFORMATION PROVIDED IS REPRESENTATIVE OF SUBSURFACE CONDITIONS ONLY AT THE LOCATIONS AND DEPTHS WHERE SUCH INFORMATION WAS OBTAINED, AND THERE IS NO EXPRESSED OR IMPLIED AGREEMENT THAT UNIFORMITY OF MATERIALS EXISTS BETWEEN EXPLORED LOCATIONS.
(SEE PUBLICATION 408/2020, SECTION 102.05.)

Mark	Description	By	Chk'd.	Recm'd.	Date
REVISIONS					

CERTIFIED CORRECT PLANS
Daniel R. Hilferty
Professional Engineer
Approved by Bureau of Technical Utility Services
PA PUBLIC UTILITY COMMISSION
ATTEST Secretary

COMMONWEALTH OF PENNSYLVANIA REGISTERED PROFESSIONAL MATTHEW BROOKS MORRIS GEOLOGIST PG004584 PENNSYLVANIA

COMMONWEALTH OF PENNSYLVANIA
DEPARTMENT OF TRANSPORTATION

WESTMORELAND COUNTY
S.R. 0070 SECTION E10
WHEELING & LAKE ERIE RAILROAD
STATION 5028+15.15 (MP C-17.01)
OVER CEDAR CREEK
PRECAST CONCRETE BOX CULVERT EXTENSION
STRUCTURE BORINGS 2

RECOMMENDED
DISTRICT GEOTECHNICAL ENGINEER — 1/18/2022

SHEET 16 OF 18

DES: AGR | DWN: JMB | CHK: JDM

pw:\\gfnet-pw.bentley.com:gfnet-pw-01\Documents\Projects\61636\INPUT\COMP_01\CIVIL\BRDG\W&LE RR CULVERT\FINAL\SHT16_CORE BORING 2.dgn
1/4/2022 2:40:56 PM

PENNDOT STRUCTURE BORING LOG, PENNDOT GINT VERSION 4.23.3.2 2016.GDT - 10/21/08:58 - C:\USERS\JDEREVYOO\WMLOCOS\TASS\1\INTERCHANGE (7) WITH LAB DATA.GPJ

SUBSTRUCTURE UNIT: LOG 1 OF 1

WINGWALL A/BOX CULVERT OUTLET

BORING NUMBER:	BORING LOCATION	START: 07/27/2020 11:00 AM	HAMMER: AUTOMATIC
SB-11	STATION: 784+84.2 OFFSET: 358.9 FT. LT.	FINISH: 07/29/2020 2:30 PM	EFFICIENCY: 0.8 ERa

DRILLING METHOD AND EQUIPMENT:	SIZE OF CORE:	VERTICAL SCALE:	TOP OF BORING ELEVATION:
DOUBLE TUBE WIRE LINE-NX, AUTOMATIC, CME 750 ATV RIG	2.154 IN.	0 FT. 5 FT.	964.5 FT.

DRILLING INSPECTOR: DAVID ROEBUCK
DRILLER & DRILLING COMPANY: FORREST SMITH 7NT

▽ 0 HR. READING - ELAPSED TIME: El. 964.0 ft. - 0.0 hr.
▼ 24 HR. READING - ELAPSED TIME: El. 960.5 ft. - 24.0 hr.

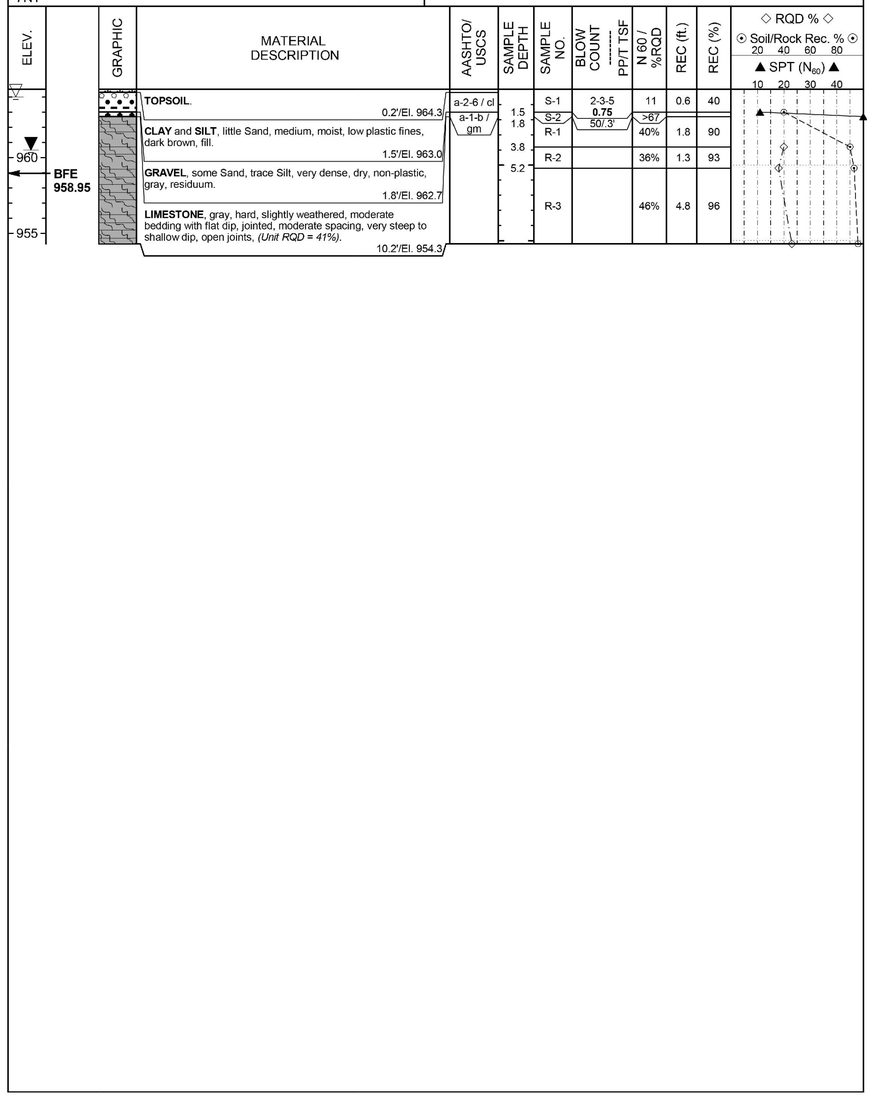

GENERAL NOTES:

THIS SHEET IS INCLUDED FOR THE CONVENIENCE OF THE DEPARTMENT. REFER TO PUBLICATION 408 SECTION 102.05 FOR FURTHER INFORMATION.

FOR ADDITIONAL SOIL AND ROCK DESCRIPTIONS SEE PUBLICATION 222.

THE BORING LOGS AND RELATED INFORMATION DEPICT SUBSURFACE CONDITIONS ONLY AT THE SPECIFIC LOCATIONS AND DATES INDICATED. SUBSURFACE CONDITIONS MAY DIFFER FROM THE CONDITIONS REPORTED AT THE SPECIFIC LOCATIONS. ALSO, THE PASSAGE OF TIME MAY RESULT IN A CHANGE OF CONDITIONS AT THE BORING LOCATIONS.

LEGEND:

PP - POCKET PENETROMETER
T - TORVANE
RQD - ROCK QUALITY DESIGNATION
SPT - STANDARD PENETRATION TEST
BFE - BOTTOM OF FOOTING ELEVATION

▽ - DENOTES 0 HOUR GROUND WATER ELEVATION

▼ - DENOTES 24 HOUR GROUND WATER ELEVATION

{} - REMARKS

THE CLASSIFICATIONS OF THE MATERIAL ENCOUNTERED HAVE BEEN VERIFIED.

INITIAL

THE INFORMATION, AS SUBMITTED, ACCURATELY REPRESENTS THE CONDITIONS ENCOUNTERED BY THE TEST BORING PROGRAM, INCLUDING BORING LOGS, EARTH SAMPLES, ROCK CORES, CLASSIFICATION OF MATERIALS, & DEPTH OF BORINGS.

GEOTECHNICAL ENGINEER — DATE 1-4-22

THE INFORMATION PROVIDED IS REPRESENTATIVE OF SUBSURFACE CONDITIONS ONLY AT THE LOCATIONS AND DEPTHS WHERE SUCH INFORMATION WAS OBTAINED, AND THERE IS NO EXPRESSED OR IMPLIED AGREEMENT THAT UNIFORMITY OF MATERIALS EXISTS BETWEEN EXPLORED LOCATIONS.
(SEE PUBLICATION 408/2020, SECTION 102.05.)

Mark	Description	By	Chk'd.	Recm'd.	Date
REVISIONS					

CERTIFIED CORRECT PLANS
Professional Engineer
Approved by Bureau of Technical Utility Services
PA PUBLIC UTILITY COMMISSION
ATTEST Secretary

COMMONWEALTH OF PENNSYLVANIA REGISTERED PROFESSIONAL MATTHEW BROOKS MORRIS GEOLOGIST PG004584 PENNSYLVANIA

COMMONWEALTH OF PENNSYLVANIA
DEPARTMENT OF TRANSPORTATION

WESTMORELAND COUNTY
S.R. 0070 SECTION E10
WHEELING & LAKE ERIE RAILROAD
STATION 5028+15.15 (MP C-17.01)
OVER CEDAR CREEK
PRECAST CONCRETE BOX CULVERT EXTENSION
STRUCTURE BORINGS 3

RECOMMENDED
DISTRICT GEOTECHNICAL ENGINEER — 1/18/2022

SHEET 17 OF 18

DES: AGR | DWN: JMB | CHK: JDM

pw:\\gfnet-pw.bentley.com:gfnet-pw-01\Documents\Projects\61636\INPUT\COMP_01\CIVIL\BRDG\W&LE RR CULVERT\FINAL\SHT17_CORE BORING 3.dgn
1/4/2022 2:41:03 PM

LABORATORY TEST SUMMARY - SOILS

					% GRAIN SIZE DISTRIBUTION (AASHTO)							CLASSIFICATION			PLASTICITY PARAMETERS			SHEAR STRENGTH				
BORING NUMBER	STATION & OFFSET	SAMPLE #	TEST DEPTH (FT.)	NATURAL MOISTURE %	GRAVEL %	SAND %	COARSE SAND %	FINE SAND %	FINES %	SILT %	CLAY %	AASHTO	USCS	S.G.	LIQUID LIMIT	PLASTIC LIMIT	P. I.	C (TSF)	ϕ (DEG.)	C' (TSF)	ϕ' (DEG)	TEST METHOD
SB-7A	83+34.0 385 ft. LT.	ST-1	27.0 to 28.0	25.3	6.6	23.2	5.6	11.9	70.2	34.3	35.9	A-4	CL-ML		27	20	7	0.048	29.4			DIR. SHR.
SB-7A	83+34.0 385 ft. LT.	BS-1	28.0 to 30.0	10.9	18.6	48.5	18.7	29.8	32.9	13.6	19.3	A-2-4	SC-SM		26	19	7					
SB-8A	83+59.0 433.3 ft. LT.	BS-1	31.5 to 33.5	14.8	7.3	30.4	17.0	23.4	52.3	19.1	33.2	A-6	CL		34	21	13					

LABORATORY TEST SUMMARY - ELECTROCHEMICAL

BORING NUMBER	STATION & OFFSET	SAMPLE #	TEST DEPTH (FT.)	SAMPLE SOURCE	pH	MINIMUM RESISTIVITY (ohm-cm)	CHLORIDE CONTENT (ppm)	SULFATE CONTENT (ppm)	HIGH ORGANIC CONTENT?	CORROSIVE FOR CONCRETE?	CORROSIVE FOR STEEL?
SB-7A	83+34.0 385 ft. LT.	BS-1	28.0 to 30.0	SOIL	7.0	7,500	10	210	No	No	No
SB-8A	83+59.0 433.3 ft. LT.	BS-1	31.5 to 33.5	SOIL	7.2	4,600	10	52	No	No	No

Potentially Corrosive Environments per DM-4

Soil: Resistivity < 2,000 ohm-cm
2,000 ohm-cm < Resistivity < 5000 ohm-cm with sulfate concentration > 200 ppm
2,000 ohm-cm < Resistivity < 5000 ohm-cm with chloride concentration > 100 ppm
pH < 5.5
5.5 < pH <8.5 in soils with high organic content
Sulfate >1,000 ppm

Water: Chloride Content > 1000 ppm
Sulfate Content > 150 ppm
High Organic Content
pH < 5.5

Corrosive for Concrete: ph<4 or Sulfates > 1000ppm

Refer to DM-4 for landfill and cinder fills, soils subject to mine or industrial drainage, and mixtures of high resistivity and low resistivity high alkaline soils

LABORATORY TEST SUMMARY - ROCK CORE

BORING NUMBER	STATION & OFFSET	SAMPLE #	TEST DEPTH (FT.)	TEST	STRENGTH	JAR SLAKE TEST PERFORMED?	SLAKE DURABILITY INDEX & TYPE	ROCK RECOVERY %	RQD %	BEDROCK LITHOLOGY	STRATIGRAPHIC UNIT
SB-11	84+84.2 358.9 ft. LT.	R-3	9.8 to 10.2	UNCONFINED COMPRESSIVE TEST	12430.0 PSI / 895.0 TSF	NO		96	46	LIMESTONE	
SB-7	83+34.0 383 ft. LT.	R-3	38.3 to 39.1	UNCONFINED COMPRESSIVE TEST	9017.0 PSI / 649.2 TSF	NO		100	36	LIMESTONE	
SB-8	83+59.0 431.3 ft. LT.	R-1	33.9 to 34.5	UNCONFINED COMPRESSIVE TEST	4906.0 PSI / 353.2 TSF	NO		100	42	LIMESTONE	
SB-9	84+26.3 368.6 ft. LT.	R-2	2.6 to 3.1	UNCONFINED COMPRESSIVE TEST	5145.0 PSI / 370.4 TSF	NO		100	53	LIMESTONE	

GENERAL NOTES:

THIS SHEET IS INCLUDED FOR THE CONVENIENCE OF THE DEPARTMENT. REFER TO PUBLICATION 408 SECTION 102.05 FOR FURTHER INFORMATION.

FOR ADDITIONAL SOIL AND ROCK DESCRIPTIONS SEE PUBLICATION 222.

THE BORING LOGS AND RELATED INFORMATION DEPICT SUBSURFACE CONDITIONS ONLY AT THE SPECIFIC LOCATIONS AND DATES INDICATED. SUBSURFACE CONDITIONS MAY DIFFER FROM THE CONDITIONS REPORTED AT THE SPECIFIC LOCATIONS. ALSO, THE PASSAGE OF TIME MAY RESULT IN A CHANGE OF CONDITIONS AT THE BORING LOCATIONS.

LEGEND:

S.G. - SPECIFIC GRAVITY
P.I. - PLASTICITY INDEX
C - COHESION
C' - EFFECTIVE COHESION
ϕ - FRICTION ANGLE
ϕ' - EFFECTIVE FRICTION ANGLE
RQD - ROCK QUALITY DESIGNATION

CERTIFIED CORRECT PLANS
Professional Engineer
Approved by Bureau of Technical Utility Services
PA PUBLIC UTILITY COMMISSION
ATTEST Secretary

THE CLASSIFICATIONS OF THE MATERIAL ENCOUNTERED HAVE BEEN VERIFIED.

INITIAL

THE INFORMATION, AS SUBMITTED, ACCURATELY REPRESENTS THE CONDITIONS ENCOUNTERED BY THE TEST BORING PROGRAM, INCLUDING BORING LOGS, EARTH SAMPLES, ROCK CORES, CLASSIFICATION OF MATERIALS, & DEPTH OF BORINGS.

1-4-22
GEOTECHNICAL ENGINEER DATE

Mark	Description	By	Chk'd.	Recm'd.	Date
REVISIONS					

COMMONWEALTH OF PENNSYLVANIA
DEPARTMENT OF TRANSPORTATION

WESTMORELAND COUNTY
S.R. 0070 SECTION E10
WHEELING & LAKE ERIE RAILROAD
STATION 5028+15.15 (MP C-17.01)
OVER CEDAR CREEK
PRECAST CONCRETE BOX CULVERT EXTENSION
LABORATORY TEST SUMMARY

RECOMMENDED
1/18/2022
DISTRICT GEOTECHNICAL ENGINEER

SHEET 18 OF 18

DES: AGR | DWN: JMB | CHK: JDM

$FILEL$ $TIME$
$DATE$

DISTRICT	COUNTY	ROUTE	SECTION	SHEET
12-0	WESTMORELAND	0070	E10	29 OF 198
	ROSTRAVER TOWNSHIP			

REVISION NUMBER	REVISIONS	DATE	BY

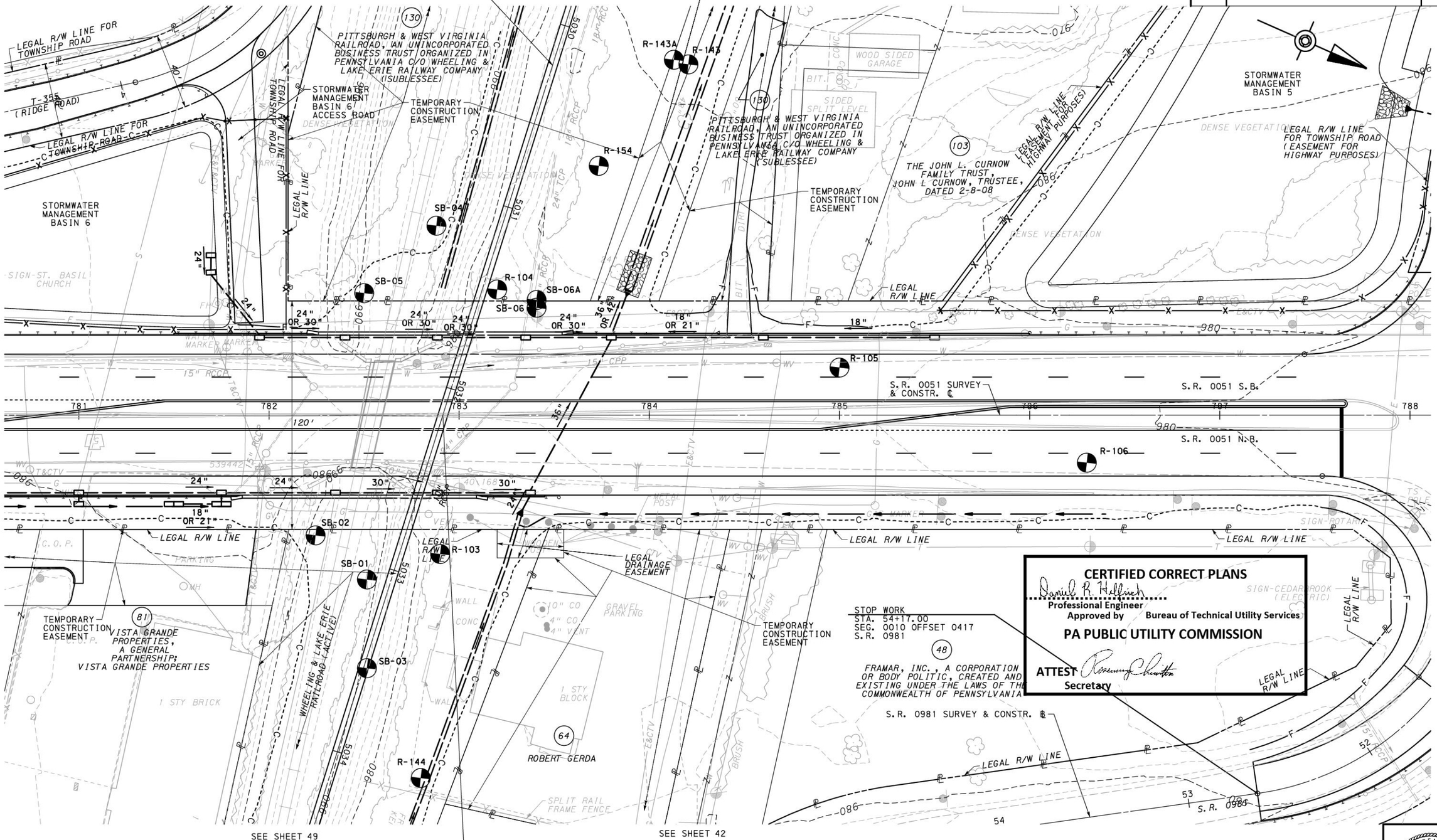

LEGEND

BORING LOCATION

P.O.T. STA. 782+91.42 S.R. 0051 SURVEY & CONSTR. ℄ =
P.O.T. STA. 5032+14.54 W&LE RAILROAD SURVEY & CONSTR. ℄

FOR S.R. 0051 PROFILE SEE SHEET 85
FOR S.R. 0981 PROFILE SEE SHEET 91
FOR W&LE RAILROAD PROFILE SEE SHEETS 98 & 99

CERTIFIED CORRECT PLANS

Daniel R. Hellrich
Professional Engineer
Approved by Bureau of Technical Utility Services

PA PUBLIC UTILITY COMMISSION

ATTEST Rosemary Chiavetta
Secretary

BORING LOCATION PLAN

0 25 50 FEET

COMMONWEALTH OF PENNSYLVANIA — REGISTERED PROFESSIONAL — MATTHEW B. MORRIS — GEOLOGIST P0004564

FILE: pw:\\dot-pa-ben1-fs.comm.dot.net-pw-01\Documents\Projects\1636\OUTPUT\COMP_01\CIVIL\GEOTY-final Design Boring Plans\SR70-E10 25sc Bore FD20
DATE: 2/8/2022 TIME: 3:53:48 PM

DISTRICT	COUNTY	ROUTE	SECTION	SHEET
12-0	WESTMORELAND	0070	E10	46 OF 198
ROSTRAVER TOWNSHIP				

REVISION NUMBER	REVISIONS	DATE	BY

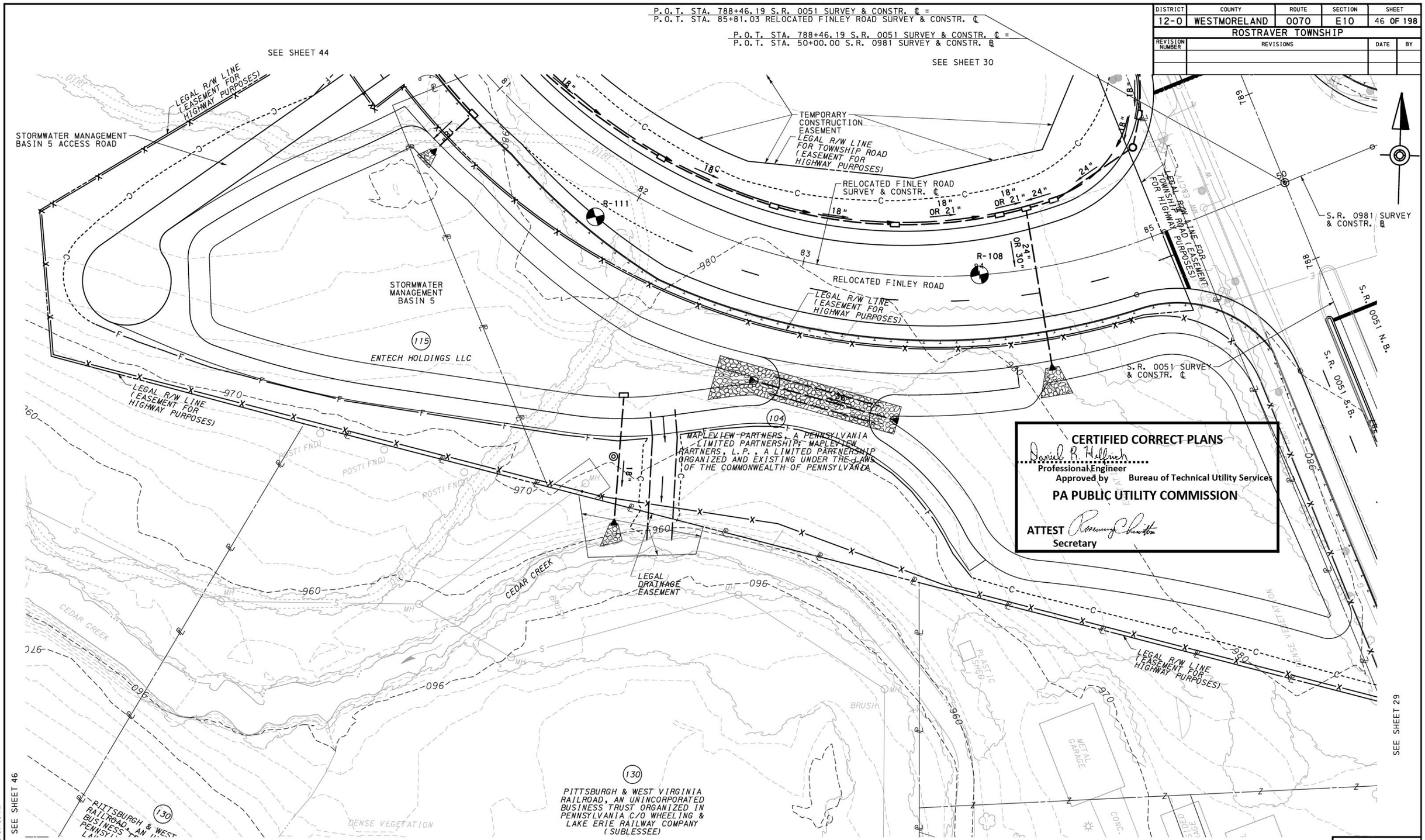

LEGEND

BORING LOCATION

FOR S.R. 0051 PROFILE SEE SHEET 86

FOR RELOCATED FINLEY ROAD PROFILE SEE SHEET 94

BORING LOCATION PLAN

0 25 50 FEET

COMMONWEALTH OF PENNSYLVANIA REGISTERED PROFESSIONAL MATTHEW B. MORRIS GEOLOGIST PG004584

FILE: pw:\\gfnet-pw.bentley.com:gfnet-pw-01\Documents\Projects\61636\OUTPUT\COMP_01\CIVIL\GEOT\Final Design Boring Plans\SR70-E10 25sc Bore FD37
DATE: 2/8/2022 TIME: 3:57:00 PM

DISTRICT	COUNTY	ROUTE	SECTION	SHEET
12-0	WESTMORELAND	0070	E10	47 OF 198
	ROSTRAVER TOWNSHIP			

REVISION NUMBER	REVISIONS	DATE	BY

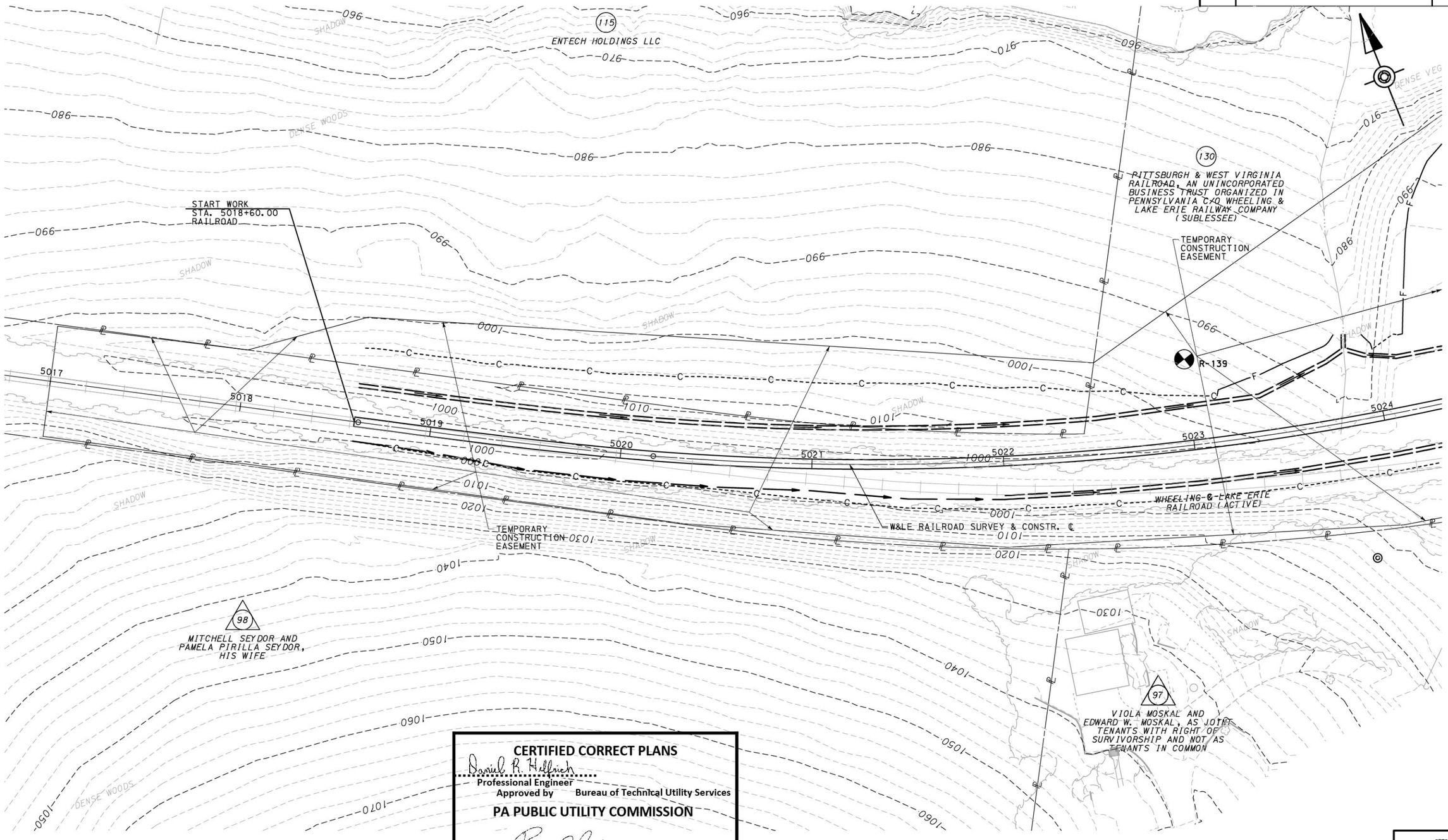

CERTIFIED CORRECT PLANS

Daniel R Hellrich
Professional Engineer
Approved by Bureau of Technical Utility Services

PA PUBLIC UTILITY COMMISSION

ATTEST Rosemary Chiavetta
Secretary

LEGEND

BORING LOCATION

FOR W&LE RAILROAD PROFILE SEE SHEET 192

BORING LOCATION PLAN

0 25 50 FEET

COMMONWEALTH OF PENNSYLVANIA
REGISTERED PROFESSIONAL
MATTHEW B. MORRIS
GEOLOGIST
PG004984

FILE: pw:\\pfnet-pw.penndot.gov.pfnet-pw-01\Documents\Projects\61636\OUTPUT\COMP_01\CIVIL\GEOT\Final Design Boring Plans\SR70-E10 25sc Bore FD38
DATE: 2/8/2022 TIME: 3:51:10 PM

DISTRICT	COUNTY	ROUTE	SECTION	SHEET
12-0	WESTMORELAND	0070	E10	48 OF 198
ROSTRAVER TOWNSHIP				

REVISION NUMBER	REVISIONS	DATE	BY

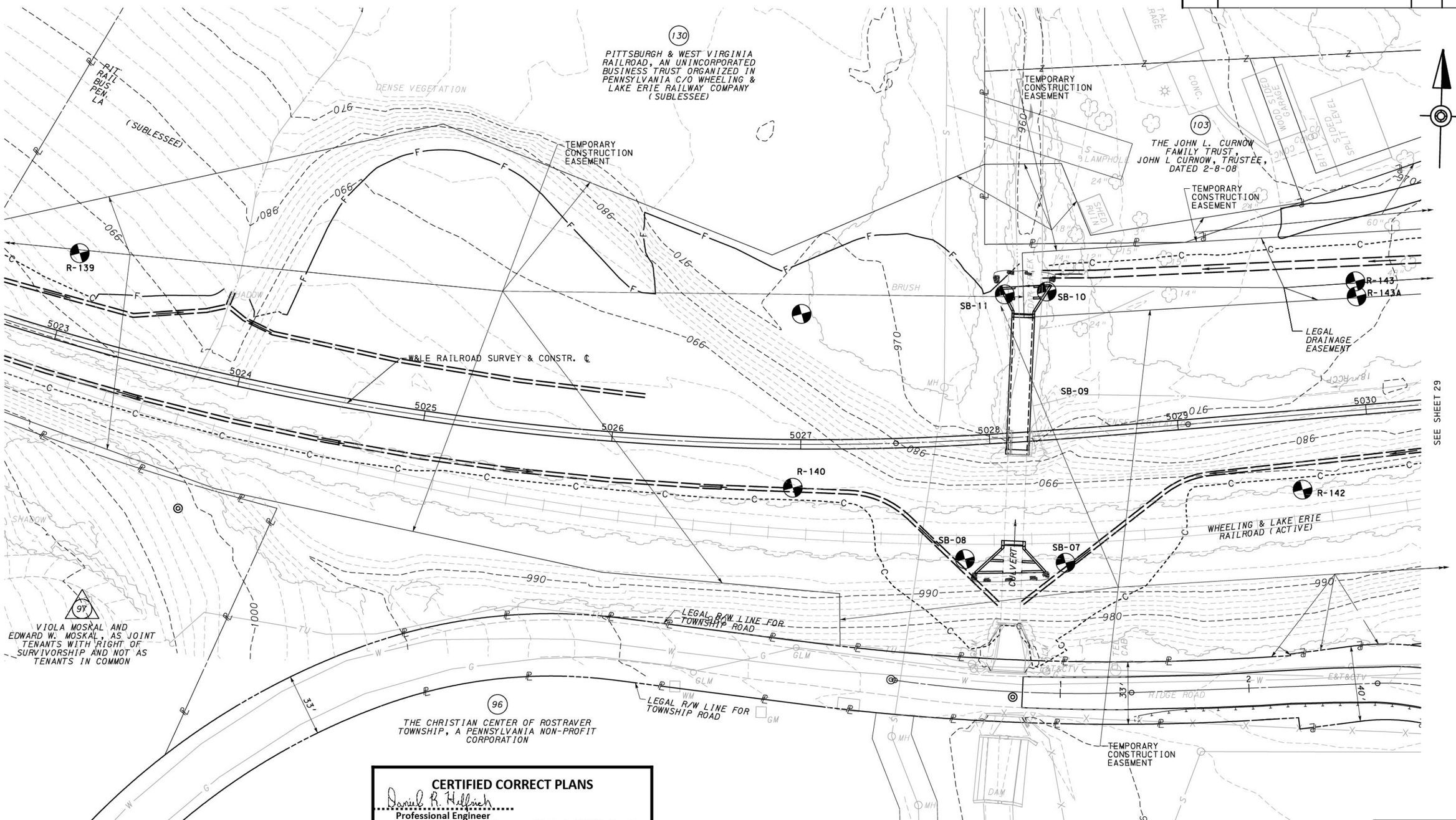

LEGEND

BORING LOCATION

CERTIFIED CORRECT PLANS

Daniel R. Helfrich
Professional Engineer
Approved by Bureau of Technical Utility Services

PA PUBLIC UTILITY COMMISSION

ATTEST Rosemary Chiavetta
Secretary

FOR W&LE RAILROAD PROFILE SEE SHEETS 97& 98

BORING LOCATION PLAN

0 25 50 FEET

COMMONWEALTH OF PENNSYLVANIA
REGISTERED PROFESSIONAL
MATTHEW B. MORRIS
GEOLOGIST
P0004584

FILE: pw:\\gfnet-pw.bentley.com:gfnet-pw-01\Documents\Projects\61636\OUTPUT\COMP_01\CIVIL\GEOT\Final Design Boring Plans\SR70-E10 25sc Bore FD39
DATE: 2/8/2022 TIME: 3:57:23 PM

DISTRICT	COUNTY	ROUTE	SECTION	SHEET
12-0	WESTMORELAND	0070	E10	49 OF 198

ROSTRAVER TOWNSHIP

REVISION NUMBER	REVISIONS	DATE	BY

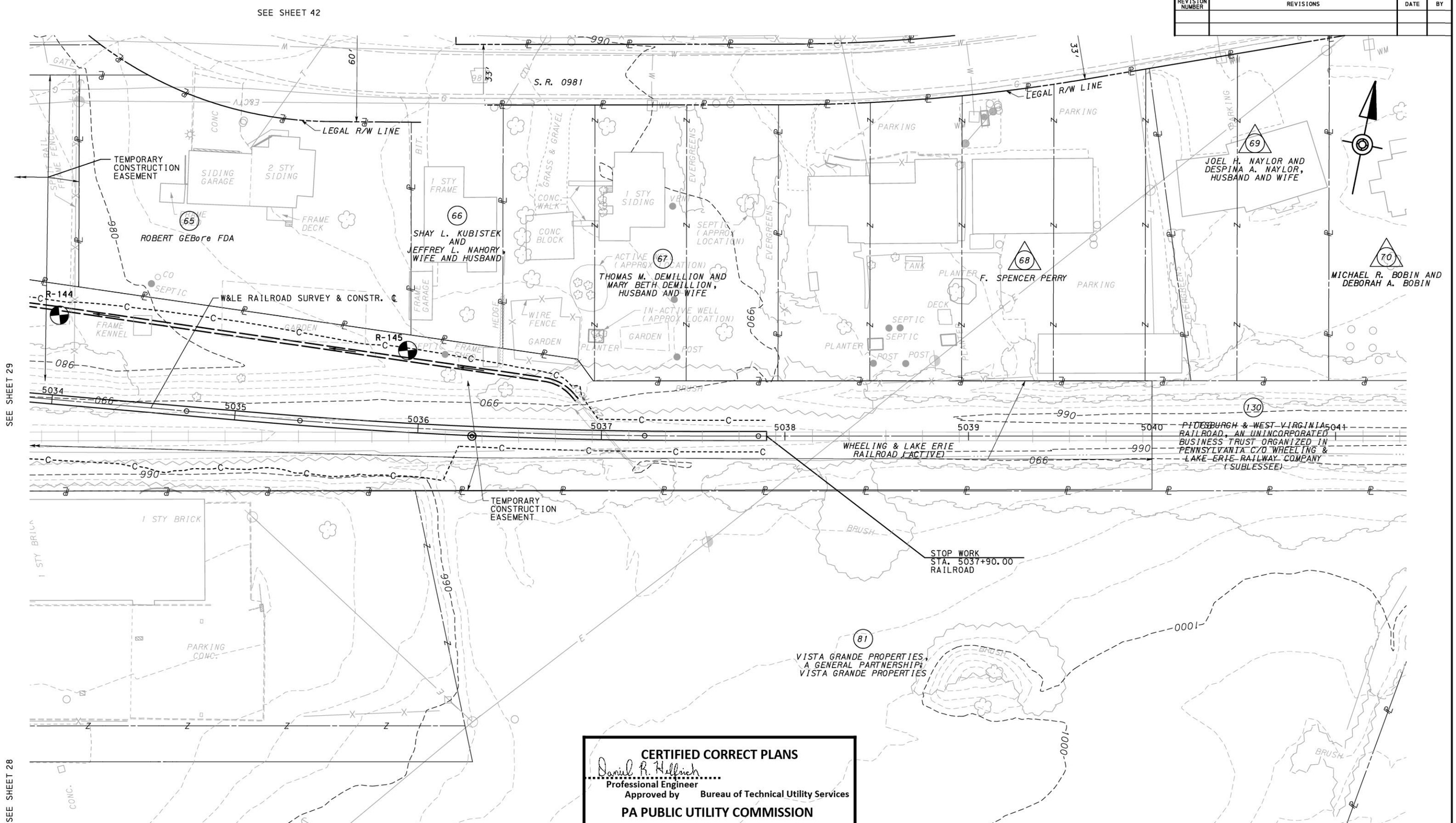

CERTIFIED CORRECT PLANS

Daniel R. Helfrich
Professional Engineer
Approved by Bureau of Technical Utility Services

PA PUBLIC UTILITY COMMISSION

ATTEST Rosemary Chiavetta
Secretary

LEGEND

BORING LOCATION

BORING LOCATION PLAN

0 25 50 FEET

COMMONWEALTH OF PENNSYLVANIA
REGISTERED PROFESSIONAL
MATTHEW B. MORRIS
GEOLOGIST
P0004584

FOR W&LE RAILROAD PROFILE SEE SHEET 99

FILE: pw1\\gfnet-pw.bentley.com:gfnet-pw-01\Documents\Projects\61636\OUTPUT\COMP_01\CIVIL\GEOT\Final Design Boring Plans\SR70-E10 25sc Bore FD40
DATE: 2/8/2022 TIME: 3:57:33 PM

DISTRICT	COUNTY	ROUTE	SECTION	SHEET
12-0	WESTMORELAND	0070	E10	84 OF 198
	ROSTRAVER TOWNSHIP			

REVISION NUMBER	REVISIONS	DATE	BY

S.R. 0051

LABORATORY TEST SUMMARY - SOILS

BORING NUMBER	STATION & OFFSET	SAMPLE #	TEST DEPTH (FT.)	NATURAL MOISTURE %	% GRAIN SIZE DISTRIBUTION (AASHTO) GRAVEL %	SAND %	COARSE SAND %	FINE SAND %	FINES %	SILT %	CLAY %	CLASSIFICATION AASHTO	USCS	S.G.	PLASTICITY PARAMETERS LIQUID LIMIT	PLASTIC LIMIT	P. I.	MOISTURE DENSITY MAX. DRY DENSITY (PCF)	OPTIMUM MOISTURE %	CBR
R-99	74+00.0 21 ft. LT.	S-2	1.7 to 5.0	26.0	9.6	9.3	4.6	4.8	81.1	55.8	25.3	A-6	CL		40	23	17	109.9	16.1	1

BORING R-99
STA. 774+00.0, 21.0 ft. LT.
EL. 1002.8 ft.0.6 ERm
N60 ▽0 hr. Elev.: Dry
----- ▼24 hr. Elev.:NR
REC% / (RQD)%

0.2'	73	BIT. CONC.
		CONCRETE
0.9'	6	GRAV, l/ Sand, t/ Clay (a-1-a/gp)
0.6'	13	SILT, s/ Clay, t/ Grav, t/ Sand, (A-6/CL)
3.3'	45 >93/ 0.4'	GRAV, l/ Sand, l/ Clay (a-2-6/gc)
2.0'	>50/ 0.4'	
5.4'	>50/ 0.2'	GRAV, l/ Sand, l/ Silt (a-1-a/gm)
	>50/ 0.4'	
	>50/ 0.4'	

12.4'
EL. 990.4'

BORING R-100
STA. 776+80.0, 22.0 ft. RT.
EL. 995.1 ft. 0.6 ERm
N60 ▽0 hr. Elev.: 992.5 ft.
----- ▼24 hr. Elev.:NR
REC% / (RQD)%

0.3'	73	BIT. CONC.
0.4'	>50/ 0.2'	CONCRETE
0.4'	66	BIT. CONC.
2.0'	75 >50/ 0.4'	GRAV, s/ Sand, l/ Clay (a-2-6/gc)
4.9'	>50/ 0.0'	GRAV, s/ Sand, l/ Silt (a-1-b/gm)
	95(0)	SANDSTONE
0.5'		CLAYSTONE
2.0'		
4.5'	100(28)	SHALE

15.0'
EL. 980.1'

PROP. GRADE

EX. GRADE

	773	+50	+75	774	+49	+50	775	+50	776	+50	777	+50	778	+50	779	+50	+87	780	+50
DATUM 940	1007.1	1005.7	1004.9 G-1004.70	1004.1 G-1003.88	1002.3	1002.3 G-1002.10 G-1002.15	1000.4 G-1000.22	998.6 G-998.35	996.7 G-996.48	995.0 G-994.61	993.1 G-992.73	991.2 G-990.86	989.4 G-988.99	987.5 G-987.11	985.0 G-985.24	983.4 G-983.37	982.2 G-981.96	981.7 G-981.51	980.0 G-979.87

SEE SHEET #RD51prf01

SEE SHEET 85

CERTIFIED CORRECT PLANS
Daniel R. Helbich
Professional Engineer
Approved by Bureau of Technical Utility Services
PA PUBLIC UTILITY COMMISSION
ATTEST Rosemary Chiavetta
Secretary

PROFILE

HORIZONTAL
0 25 50 FEET
VERTICAL
0 5 10 FEET

COMMONWEALTH OF PENNSYLVANIA REGISTERED PROFESSIONAL MATTHEW B. MORRIS GEOLOGIST PG004584

FOR S.R. 0051 PLAN SEE SHEETS 27 & 28

FILE: pw:\\pfnet-pw_bentley.com:pfnet-pw-01\Documents\Projects\61636\OUTPUT\COMP_01\CIVIL\GEOT\Final Design Profile Sheets\SR70-E10.IF201.dgn
DATE: 8/2/2022 TIME: 4:01:15 PM

DISTRICT	COUNTY	ROUTE	SECTION	SHEET
12-0	WESTMORELAND	0070	E10	85 OF 198
	ROSTRAVER TOWNSHIP			

REVISION NUMBER	REVISIONS	DATE	BY

LABORATORY TEST SUMMARY - SOILS

BORING NUMBER	STATION & OFFSET	SAMPLE #	TEST DEPTH (FT.)	NATURAL MOISTURE %	% GRAIN SIZE DISTRIBUTION (AASHTO) GRAVEL %	SAND %	COARSE SAND %	FINE SAND %	FINES %	SILT %	CLAY %	CLASSIFICATION AASHTO	USCS	S.G.	PLASTICITY PARAMETERS LIQUID LIMIT	PLASTIC LIMIT	P. I.	MOISTURE DENSITY MAX. DRY DENSITY (PCF)	OPTIMUM MOISTURE %	CBR
R-106	86+30.0 25 ft. RT.	S-2 to 5	2.9 to 9.0	26.2	2.4	2.7	1.4	1.3	95.0	64.1	30.9	A-6	CL		39	21	18	107.7	15.7	1

S. R. 0051

BORING R-103
STA. 782+90.0, 73.0 ft. RT.
EL. 976.3 ft. 0.8 ERa
N60 ▽0 hr. Elev.: 972.1 ft.
REC% / (RQD)% ▼24 hr. Elev.: 971.3 ft.

TOPSOIL, Org 0.5'
SAND, l/ Org (a-1-b/sm) 0.8'
CLAY, s/ Silt, s/ Grav, l/ Sand, (a-6/cl) 3.2'
CLAY, s/ Silt, l/ Sand, t/ Grav, (a-6/cl) 9.0'
CLAY, s/ Silt, s/ Sand (a-7-6/ch) 9.5'
CLAY, s/ Silt, l/ Sand, l/ Grav, (a-6/cl) 5.5'
CLAY, s/ Sand, l/ Silt (a-7-6/ch) 10.0'
CLAY, s/ Grav, l/ Sand (a-6/cl) 0.5'
CLAY, s/ Silt, l/ Sand (a-7-6/ch) 9.5'
CLAY, s/ Grav, l/ Sand (a-6/cl) 2.5' >67/ 0.0'
0.5'
GRAV, s/ Sand, l/ Clay 2.7'
SANDSTONE 0.7'
CLAY 1.4'
Car **SILTSTONE** 4.9'
LIMESTONE
61.2'
EL. 915.2'

BORING R-104
STA. 783+20.0, 66.0 ft. LT.
EL. 974.7 ft. 0.8 ERa
N60 ▽0 hr. Elev.: 971.8 ft.
REC% / (RQD)% ▼24 hr. Elev.: 966.1 ft.

0.5' **TOPSOIL**, Org
1.0' **SAND**, s/ Silt (a-1-b/sw)
1.5' **GRAV**, s/ Silt, s/ Sand (a-1-b/gm)
7.5' **CLAY**, s/ Silt, s/ Sand, t/ Grav, (a-6/cl)
4.5' **CLAY**, s/ Silt, l/ Sand, t/ Grav, (a-6/cl)
7.0' **CLAY**, s/ Silt, s/ Sand, t/ Grav, (a-7-6/ch)
4.0' **CLAY**, s/ Silt, s/ Sand (a-6/cl)
3.8' 121/ 0.3' **SAND & GRAV**, s/ Clay (a-2-6/sc)
8.7' **CLAY**, s/ Silt, s/ Sand, s/ Grav, (a-7-6/ch)
1.9' 115/ 0.4' **GRAV**, s/ Silt, s/ Sand, s/ Clay
0.8' 100(20) **SILTSTONE**
1.2' Car **LIMESTONE**
0.2' 77(9) **CLAYSTONE**
2.6' **COAL**
5.5' 92(28) **SANDSTONE**
3.3' 100(76) Car **SILTSTONE**
1.8' Car **LIMESTONE**
55.8'
EL. 918.9'

PROP. GRADE

BORING R-105
STA. 785+00.0, 25.0 ft. LT.
EL. 977.5 ft. 0.6 ERm
N60 ▽0 hr. Elev.: Dry
REC% / (RQD)% ▼24 hr. Elev.: NR

0.4' **BIT. CONC.**
0.8' **CONCRETE**
0.5' **GRAV**, t/ Sand (a-1-a/gp)
11.8' **CLAY**, t/ Grav, t/ Sand (a-6/cl)
13.5'
EL. 964.0'

BORING R-106
STA. 786+30.0, 25.0 ft. RT.
EL. 979.1 ft. 0.6 ERm
N60 ▽0 hr. Elev.: Dry
REC% / (RQD)% ▼24 hr. Elev.: NR

EX. GRADE

0.4' **BIT. CONC.**
0.8' **CONCRETE**
1.7' **GRAV**, s/ Sand, t/ Clay (a-1-a/gw)
10.6' **SILT**, s/ Clay, t/ Sand, t/ Grav, (A-6/CL)
13.5'
EL. 965.6'

SEE SHEET 84

SEE SHEET 86

DATUM 910

780	+50	781	+50	782	+50	783	+50	+62	784	+50	785	+50	786	+50	787	+50
981.7	G-981.51	980.0	G-979.87	978.6	G-978.54	977.4	G-977.52	976.7	G-976.81	976.1	G-976.42	976.2	G-976.33	976.4	G-976.56	976.5	G-976.67	977.0	G-977.01	977.6	G-977.47	978.1	G-977.93	978.7	G-978.39	979.3	G-978.85	979.8	G-979.31	980.3	G-979.77	980.8	G-980.23

HORIZONTAL
0 25 50 FEET

VERTICAL
0 5 10 FEET

PROFILE

FOR S.R. 0051 PLAN SEE SHEET 29

CERTIFIED CORRECT PLANS
David R. Hellrich
Professional Engineer
Approved by Bureau of Technical Utility Services
PA PUBLIC UTILITY COMMISSION
ATTEST Rosemary Chiavetta
Secretary

COMMONWEALTH OF PENNSYLVANIA
REGISTERED PROFESSIONAL
MATTHEW B. MORRIS
GEOLOGIST
PG004584

FILE: pw:\\pfnet-pw.penndot.com:pfnet-pw-01\Documents\Projects\61636\OUTPUT\COMP_01\C1VIL\GEOT\Final Design Profile Sheets\SR70-E10_IF201.dgn
DATE: 2/8/2022 TIME: 4:01:20 PM

DISTRICT	COUNTY	ROUTE	SECTION	SHEET
12-0	WESTMORELAND	0070	E10	97 OF 198
	ROSTRAVER TOWNSHIP			

REVISION NUMBER	REVISIONS	DATE	BY

W&LE RAILROAD

LABORATORY TEST SUMMARY - SOILS

					% GRAIN SIZE DISTRIBUTION (AASHTO)							CLASSIFICATION			PLASTICITY PARAMETERS			MOISTURE DENSITY		
BORING NUMBER	STATION & OFFSET	SAMPLE #	TEST DEPTH (FT.)	NATURAL MOISTURE %	GRAVEL %	SAND %	COARSE SAND %	FINE SAND %	FINES %	SILT %	CLAY %	AASHTO	USCS	S.G.	LIQUID LIMIT	PLASTIC LIMIT	P. I.	MAX. DRY DENSITY (PCF)	OPTIMUM MOISTURE %	CBR
R-139	5023+00.0 45 ft. LT.	S-1 to 5	0.0 to 7.5	14.3	0.1	20.0	7.2	12.8	79.9	42.7	37.2	A-6	CL	2.77	36	23	13			

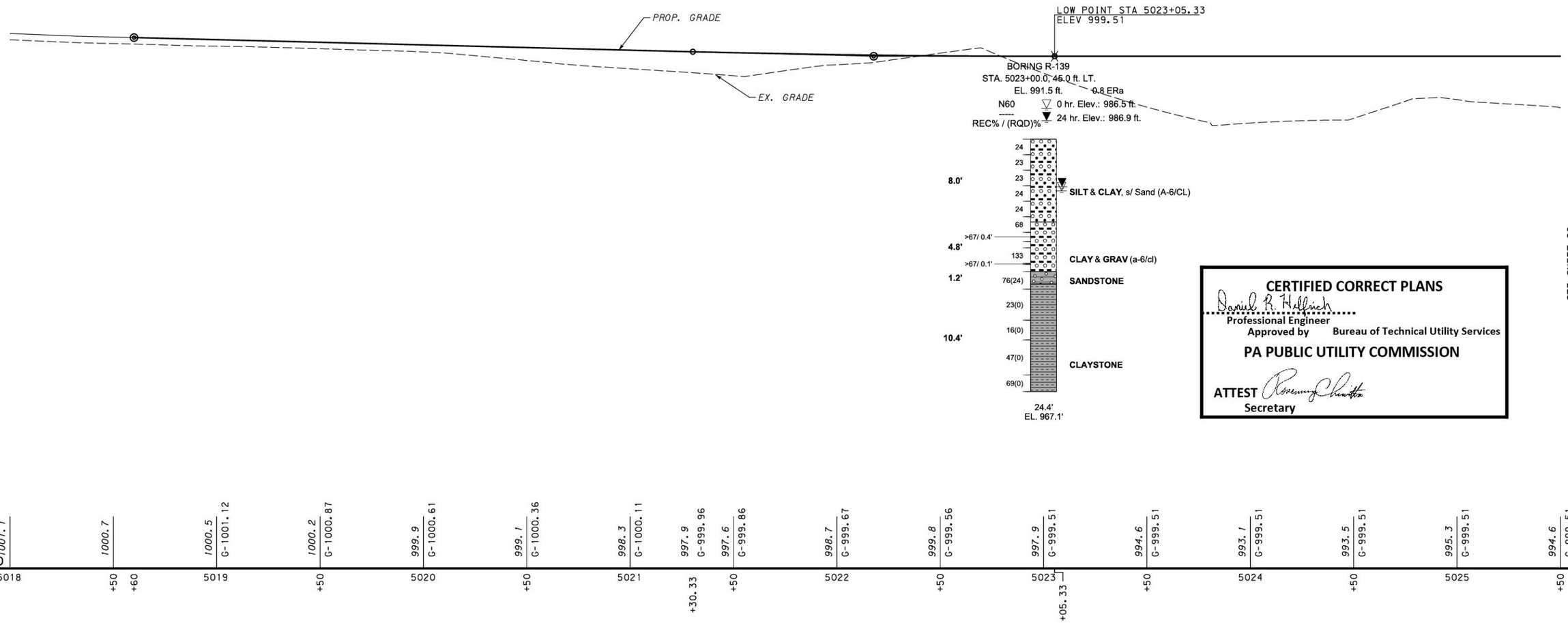

CERTIFIED CORRECT PLANS
Daniel R. Hillrich
Professional Engineer
Approved by Bureau of Technical Utility Services
PA PUBLIC UTILITY COMMISSION
ATTEST
Secretary

SEE SHEET 98

PROFILE

HORIZONTAL
0 25 50 FEET

VERTICAL
0 5 10 FEET

FOR W&LE RAILROAD PLAN SEE SHEETS 47 & 48

COMMONWEALTH OF PENNSYLVANIA REGISTERED PROFESSIONAL MATTHEW B. MORRIS GEOLOGIST PG004584

FILE: pw:\\dfnet-pw.bentley.com:dfnet-pw-01\Documents\Projects\61636\OUTPUT\COMP_01\C1VIL\GEOTVFinal Design Profile Sheets\SR70-E10_1F401.dgn
DATE: 2/8/2022 TIME: 1:42:22 PM

DISTRICT	COUNTY	ROUTE	SECTION	SHEET
12-0	WESTMORELAND	0070	E10	98 OF 198
	ROSTRAVER TOWNSHIP			

REVISION NUMBER	REVISIONS	DATE	BY

W&LE RAILROAD

PROP. GRADE

EX. GRADE

HIGH POINT STA 5028+40.00
ELEV 999.51

BORING R-140
STA. 5026+96.0, 23.0 ft. RT.
EL. 996.1 ft. 0.8 ERa
N60 ▽ 0 hr. Elev.: 967.2 ft.
REC% / (RQD)% ▼ 24 hr. Elev.: 969.7 ft.

12 9 11 9 13 19 9 9 11 8 9 8 8 8 11 15 17

22.5' **SAND**, s/ Silt, s/ Grav, l/ Clay, (a-1-b/sm)

3.0' **CLAY & SILT**, s/ Sand (A-6/CL)

3.0' 91/ 0.3' >67/ 0.1' **GRAV**, s/ Sand, l/ Clay (a-2-6/gc)

86(57) 73(15) 100(75) 100(45)

10.9' **LIMESTONE**

39.4'
EL. 956.7'

EXISTING 10' X 10' CONCRETE BOX CULVERT

BORING R-142
STA. 5029+63.0, 39.5 ft. RT.
EL. 995.5 ft. 0.8 ERa
N60 ▽ 0 hr. Elev.: 966.5 ft.
REC% / (RQD)% ▼ 24 hr. Elev.: 966.9 ft.

3 11 17 13 13 9 15 12 11 9 11 15 11 9 9 7 21

16.5' **CLAY**, s/ Silt, s/ Sand, l/ Grav, (a-6/cl)

GRAV & SAND, l/ Silt (a-1-b/gm)

GRAV & SAND, l/ Silt (a-1-b/gm)

LIMESTONE

10.5'

2.0' >67/ 0.3' >67/ 0.4' 44(0) 63(27) 95(38) 94(49)

3.5' 9 19 67 **SILT**, s/ Sand, l/ Clay (a-4/ml)

2.5' >67/ 0.1' >67/ 0.1' 48(0) 100(61) **CLAY & SAND**, s/ Grav (a-6/cl)

10.9' 14.4' 96(66) 82(27)

39.9'
EL. 955.6'

20.4'
EL. 949.6'

BORING R-143A
STA. 5030+00.0, 60.0 ft. LT.
EL. 970.0 ft. 0.8 ERa
N60 ▽ 0 hr. Elev.: 967.3 ft.
REC% / (RQD)% ▼ 24 hr. Elev.: 965.6 ft.

BORING R-154
STA. 5030+65.0, 39.0 ft. LT.
EL. 971.5 ft. 0.8 ERa
N60 ▽ 0 hr. Elev.: 965.8 ft.
REC% / (RQD)% ▼ 24 hr. Elev.: 966.9 ft.

9 72 15 21 27 21 23 31 13 13 27 28 61 6.0' >67/ 0.4' >67/ 0.1' >67/ 0.3' 41(14) 62(0) 58(0) 63(0)

12.0' **CLAY & SILT**, s/ Sand, t/ Grav, (a-6/cl)

SILT & CLAY, s/ Sand, t/ Grav, (a-6/ml)

CLAY, l/ Grav (a-6/cl)

6.0' **SANDSTONE**

1.5'

14.7' **SHALE w/SANDSTONE**

40.2'
EL. 931.3'

PROPOSED BRIDGE - WHEELING & LAKE ERIE RAILROAD OVER S.R. 0051

CERTIFIED CORRECT PLANS
Daniel R. Hellrich
Professional Engineer
Approved by Bureau of Technical Utility Services
PA PUBLIC UTILITY COMMISSION
ATTEST Rosemary Chiavetta
Secretary

SEE SHEET 97

SEE SHEET 99

LABORATORY TEST SUMMARY - SOILS

BORING NUMBER	STATION & OFFSET	SAMPLE #	TEST DEPTH (FT.)	NATURAL MOISTURE %	% GRAIN SIZE DISTRIBUTION (AASHTO) GRAVEL %	SAND %	COARSE SAND %	FINE SAND %	FINES %	SILT %	CLAY %	CLASSIFICATION AASHTO	USCS	S.G.	PLASTICITY PARAMETERS LIQUID LIMIT	PLASTIC LIMIT	P. I.	MOISTURE DENSITY MAX. DRY DENSITY (PCF)	OPTIMUM MOISTURE %	CBR
R-140	5026+96.0 23 ft. RT.	S-16 to 17	22.5 to 25.5	26.7	1.8	23.2	13.7	9.5	75.0	36.0	39.0	A-6	CL		40	24	16			
R-154	5030+65.0 39 ft. LT.	S-9 to 12	12.0 to 18.0	24.9	8.9	24.0	5.9	18.1	67.1	33.8	33.3	A-6	CL	2.86	37	22	15			

995.3 G-999.51 | 994.6 G-999.51 | 993.5 G-999.51 | 993.6 G-999.51 | 993.1 G-999.51 | 981.2 G-999.51 | 970.0 G-999.51 | 974.2 G-999.51 | 971.8 G-999.46 | 972.0 G-999.34 | 974.2 G-999.14 | 977.4 G-998.87 | 977.9 G-998.53 | 976.6 G-998.12 | 975.5 G-997.67 | 978.0 G-997.22

DATUM 925

5025 +50 5026 +50 5027 +50 5028 +40 +50 5029 +50 5030 +50 +50 5031 +50 5032 +50

HORIZONTAL 0 25 50 FEET

VERTICAL 0 5 10 FEET

PROFILE

FOR W&LE RAILROAD PLAN SEE SHEETS 29 & 48

COMMONWEALTH OF PENNSYLVANIA REGISTERED PROFESSIONAL MATTHEW B. MORRIS GEOLOGIST PG004584

FILE: pw:\\pfnet-pw.bentley.com:pfnet-pw-01\Documents\Projects\61636\OUTPUT\COMP_01\CIVIL\GEOT\Final Design Profile Sheets\SR70-E10_1F401.dgn
DATE: 2/2/2022 TIME: 11:25:25 AM

DISTRICT	COUNTY	ROUTE	SECTION	SHEET
12-0	WESTMORELAND	0070	E10	99 OF 198
	ROSTRAVER TOWNSHIP			

REVISION NUMBER	REVISIONS	DATE	BY

W&LE RAILROAD

LABORATORY TEST SUMMARY - SOILS

BORING NUMBER	STATION & OFFSET	SAMPLE #	TEST DEPTH (FT.)	NATURAL MOISTURE %	% GRAIN SIZE DISTRIBUTION (AASHTO) GRAVEL %	SAND %	COARSE SAND %	FINE SAND %	FINES %	SILT %	CLAY %	CLASSIFICATION AASHTO	USCS	S.G.	PLASTICITY PARAMETERS LIQUID LIMIT	PLASTIC LIMIT	P. I.	MOISTURE DENSITY MAX. DRY DENSITY (PCF)	OPTIMUM MOISTURE %	CBR
R-144	5034+00.0 46 ft. LT.	S-6 to 9	7.5 to 13.5	27.3	0.0	0.8	0.2	0.6	99.2	45.8	53.4	A-6	CL		33	21	12			
R-144	5034+00.0 46 ft. LT.	S-12	16.5 to 18.0	33.2	0.0	0.4	0.0	0.4	99.6	36.3	63.3	A-6	CL		35	23	12			
R-144	5034+00.0 46 ft. LT.	S-16	22.5 to 24.0	36.5																
R-145	5035+92.0 42 ft. LT.	S-1 to 8	0.0 to 12.0	25.1	0.4	6.4	1.7	4.7	93.2	31.2	62.0	A-6	CL		40	17	23			
R-145	5035+92.0 42 ft. LT.	S-13 to 18	18.0 to 27.0	32.3	0.0	0.4	0.0	0.4	99.6	35.4	64.2	A-6	CL	2.76	35	23	12			

PROPOSED BRIDGE - WHEELING & LAKE ERIE RAILROAD OVER S.R. 0051

PROP. GRADE

EX. GRADE

BORING R-144
STA. 5034+00.0, 46.0 ft. LT.
EL. 978.0 ft. 0.8 ERa
N60 ▽ 0 hr. Elev.: 952.0 ft.
REC% / (RQD)% ▼ 24 hr. Elev.:NR

0.4' GRAV
7.1' CLAY, l/ Silt, t/ Sand (a-6/cl)
7.0' CLAY & SILT (A-6/CL)
15.5' CLAY & SILT (A-6/CL)
30.0'
EL. 948.0'

BORING R-145
STA. 5035+92.0, 42.0 ft. LT.
EL. 982.5 ft. 0.8 ERa
N60 ▽ 0 hr. Elev.: 946.5 ft.
REC% / (RQD)% ▼ 24 hr. Elev.: 976.8 ft.

12.0' CLAY, s/ Silt, t/ Sand (A-6/CL)
28.5' CLAY & SILT (A-6/CL)
40.5'
EL. 942.0'

| | | | | | | | | | | | | | | | |

PENNSYLVANIA DEPARTMENT OF TRANSPORTATION
CROSS SECTIONS

Dist.	County	Route	Sect.	Prelim. Bk. No.	Final Bk. No.	Sheet No.
12-0	WESTMORELAND	0070	E10			167 OF 198

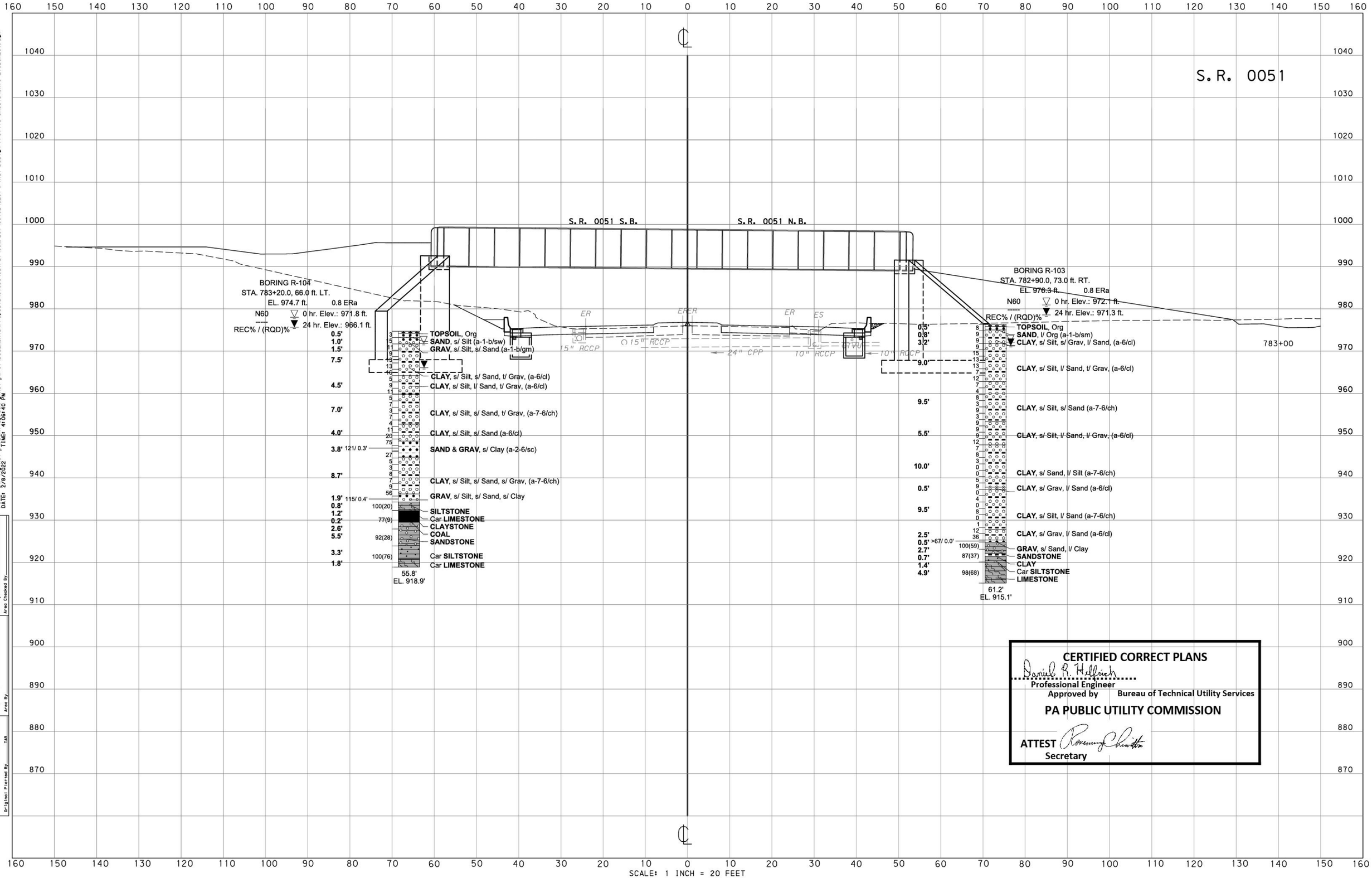

CERTIFIED CORRECT PLANS
Daniel R. Helfrich
Professional Engineer
Approved by Bureau of Technical Utility Services
PA PUBLIC UTILITY COMMISSION
ATTEST Rosemary Chiavetta
Secretary

SCALE: 1 INCH = 20 FEET

FILE: pw:\\gfnet-pw.bentley.com:gfnet-pw-01\Documents\Projects\61636\OUTPUT\COMP_01\CIVIL\GEOT\Final Design Profile Sheets\SR70-E10_IX201.dgn
DATE: 2/8/2022 TIME: 4:06:40 PM

Finals Plotted By
Finals Checked By
Area By
Area Checked By
Original Checked By
Template By
Area By
Application No.
Route No.
Original Plotted By TAR

PENNSYLVANIA DEPARTMENT OF TRANSPORTATION
CROSS SECTIONS

Dist.	County	Route	Sect.	Prelim. Bk. No.	Final Bk. No.	Sheet No.
12-0	WESTMORELAND	0070	E10			168 OF 198

S.R. 0051

S.R. 0051 S.B.

S.R. 0051 N.B.

BORING R-105
STA. 785+00.0, 25.0 ft. LT.
EL. 977.5 ft. 0.6 ERm
N60 ▽ 0 hr. Elev.: Dry
----- ▼ 24 hr. Elev.: NR
REC% / (RQD)% 24 hr. Elev.: NR

ES ER ER ER ER ES

0.4' 73 **BIT. CONC.**
0.8' 15 **CONCRETE**
0.5' 14 **GRAV**, t/ Sand (a-1-a/gp)
11.8' 14 15 13 11 7 22 **CLAY**, t/ Grav, t/ Sand (a-6/cl)
13.5'
EL. 964.0'

G

785+00

160 150 140 130 120 110 100 90 80 70 60 50 40 30 20 10 0 10 20 30 40 50 60 70 80 90 100 110 120 130 140 150 160

1020 1010 1000 990 980 970 960 950 940 930 920 910 900 890 880 870

SCALE: 1 INCH = 20 FEET

CERTIFIED CORRECT PLANS
Daniel R. Hellrich
Professional Engineer
Approved by Bureau of Technical Utility Services
PA PUBLIC UTILITY COMMISSION
ATTEST Rosemary Chiavetta
Secretary

Application No.
Route No.
Original Plotted By TAB
Original Checked By
Template By
Area By
Finals Plotted By
Finals Checked By
Area By
Area Checked By

FILE: pw:\\dfnet-pw.bentley.com:dfnet-pw-01\Documents\Projects\61636\OUTPUT\COMP_01\CIVIL\GEOTY-Final Design Profile Sheets\SR70-E10_IX201.dgn
DATE: 2/8/2022 TIME: 4:06:44 PM

PENNSYLVANIA DEPARTMENT OF TRANSPORTATION
CROSS SECTIONS

Dist.	County	Route	Sect.	Prelim. Bk. No.	Final Bk. No.	Sheet No.
12-0	WESTMORELAND	0070	E10			193 OF 198

WHEELING & LAKE ERIE RAILROAD

BORING R-141
STA. 5027+00.0, 69.0 ft. LT.
EL. 970.3 ft. 0.8 ERa
N60 ▽ 0 hr. Elev.: 959.8 ft.
REC% / (RQD)% ▽ 24 hr. Elev.: 961.5 ft.

0.3' TOPSOIL
1.7' CLAY & SILT, l/ Sand (a-2-6/cl)
3.5' SAND & GRAV, l/ Silt (a-1-b/sm)
10.0' LIMESTONE
15.5'
EL. 954.8'

BORING R-140
STA. 5026+96.0, 23.0 ft. RT.
EL. 996.1 ft. 0.8 ERa
N60 ▽ 0 hr. Elev.: 967.2 ft.
REC% / (RQD)% ▽ 24 hr. Elev.: 969.7 ft.

22.5' SAND, s/ Silt, s/ Grav, l/ Clay, (a-1-b/sm)
3.0' CLAY & SILT, s/ Sand (A-6/CL)
3.0' GRAV, s/ Sand, l/ Clay (a-2-6/gc)
10.9' LIMESTONE
39.4'
EL. 956.7'

TCE
TCE
LEGAL R/W FOR TWP. RD.
5027+00

CERTIFIED CORRECT PLANS
Daniel R. Hallfinch
Professional Engineer
Approved by Bureau of Technical Utility Services
PA PUBLIC UTILITY COMMISSION
ATTEST Rosemary Chiavetta
Secretary

LABORATORY TEST SUMMARY - SOILS

BORING NUMBER	STATION & OFFSET	SAMPLE #	TEST DEPTH (FT.)	NATURAL MOISTURE %	% GRAIN SIZE DISTRIBUTION (AASHTO) GRAVEL %	SAND %	COARSE SAND %	FINE SAND %	FINES %	SILT %	CLAY %	CLASSIFICATION AASHTO	USCS	S.G.	PLASTICITY PARAMETERS LIQUID LIMIT	PLASTIC LIMIT	P. I.	MOISTURE DENSITY MAX. DRY DENSITY (PCF)	OPTIMUM MOISTURE %	CBR
R-140	5026+96.0 23 ft. RT.	S-16 to 17	22.5 to 25.5	26.7	1.8	23.2	13.7	9.5	75.0	36.0	39.0	A-6	CL		40	24	16			

SCALE: 1 INCH = 20 FEET

FILE: pw:\\dfnet-pw.bentley.com:dfnet-pw-01\Documents\Projects\61636\OUTPUT\COMP_01\CIVIL\GEOTY-Final Design Profile Sheets\SR70-E10_1X401.dgn
DATE: 2/8/2022 TIME: 4:08:12 PM

Finals Plotted By
Finals Checked By
Area By
Area Checked By
Original Checked By
Template By
Area By
Application No.
Route No.
Original Plotted By

PENNSYLVANIA DEPARTMENT OF TRANSPORTATION
CROSS SECTIONS

Dist.	County	Route	Sect.	Prelim. Bk. No.	Final Bk. No.	Sheet No.
12-0	WESTMORELAND	0070	E10			194 OF 198

WHEELING & LAKE ERIE RAILROAD

BORING R-142
STA. 5029+63.0, 39.5 ft. RT.
EL. 995.5 ft. 0.8 ERa
N60 ▽ 0 hr. Elev.: 966.5 ft.
REC% / (RQD)% ▼ 24 hr. Elev.: 966.9 ft.

3 11 17 13 13 9 15 12 11 9
16.5' **CLAY**, s/ Silt, s/ Sand, l/ Grav, (a-6/cl)
11 15 11 9 9 9 7 21
10.5' **GRAV & SAND**, l/ Silt (a-1-b/gm)
2.0' >67/ 0.3' >67/ 0.4' 44(0) **GRAV & SAND**, l/ Silt (a-1-b/gm)
63(27) 95(38) 94(49)
10.9' **LIMESTONE**
39.9'
EL. 955.6'

TCE
LEGAL DRAINAGE EASEMENT
LEGAL DRAINAGE EASEMENT
18" RCCP
LEGAL R/W FOR TWP. RD.
5029+50

SCALE: 1 INCH = 20 FEET

CERTIFIED CORRECT PLANS
Daniel R. Hollinger
Professional Engineer
Approved by Bureau of Technical Utility Services
PA PUBLIC UTILITY COMMISSION
ATTEST Rosemary Chiavetta
Secretary

Final Plotted By
Final Checked By
Area By
Area Checked By
Original Checked By
Template By
Area By
Application No.
Route No.
Original Plotted By TAR

FILE: pw:\\gfnet-pw.bentley.com:gfnet-pw-01\Documents\Projects\61636\OUTPUT\COMP_01\CIVIL\GEOTY-Final Design Profile Sheets\SR70-E10_1X401.dgn
DATE: 2/8/2022 TIME: 4:08:15 PM

PENNSYLVANIA DEPARTMENT OF TRANSPORTATION
CROSS SECTIONS

Dist.	County	Route	Sect.	Prelim. Bk. No.	Final Bk. No.	Sheet No.
12-0	WESTMORELAND	0070	E10			195 OF 198

WHEELING & LAKE ERIE RAILROAD

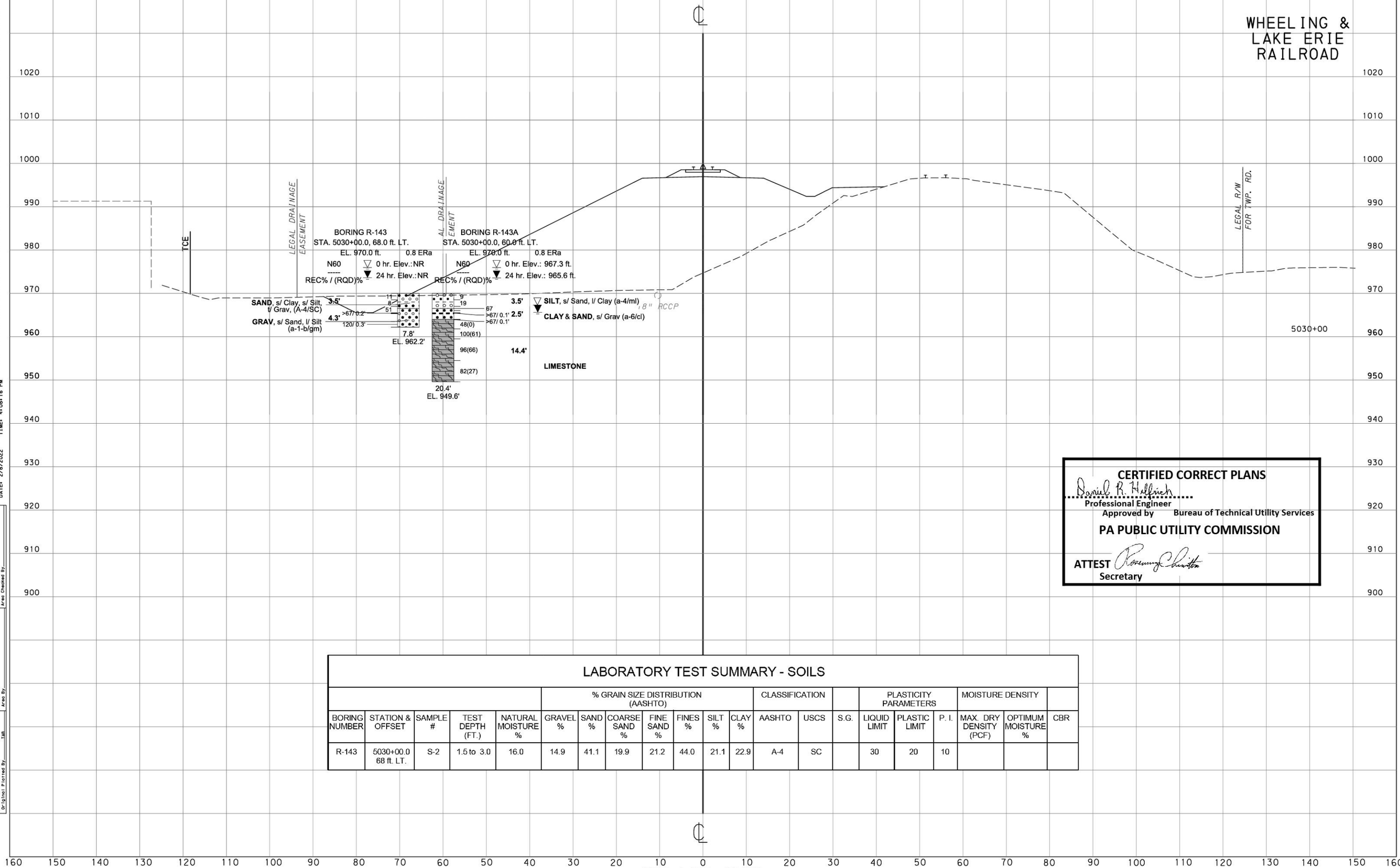

CERTIFIED CORRECT PLANS
David R. Hallinch
Professional Engineer
Approved by Bureau of Technical Utility Services
PA PUBLIC UTILITY COMMISSION
ATTEST
Secretary

LABORATORY TEST SUMMARY - SOILS

					% GRAIN SIZE DISTRIBUTION (AASHTO)							CLASSIFICATION			PLASTICITY PARAMETERS			MOISTURE DENSITY		
BORING NUMBER	STATION & OFFSET	SAMPLE #	TEST DEPTH (FT.)	NATURAL MOISTURE %	GRAVEL %	SAND %	COARSE SAND %	FINE SAND %	FINES %	SILT %	CLAY %	AASHTO	USCS	S.G.	LIQUID LIMIT	PLASTIC LIMIT	P. I.	MAX. DRY DENSITY (PCF)	OPTIMUM MOISTURE %	CBR
R-143	5030+00.0 68 ft. LT.	S-2	1.5 to 3.0	16.0	14.9	41.1	19.9	21.2	44.0	21.1	22.9	A-4	SC		30	20	10			

SCALE: 1 INCH = 20 FEET

FILE: pw:\\gfnet-pw.bentleycs.com:gfnet-pw-01\Documents\Projects\61636\OUTPUT\COMP_01\CIVIL\GEOTY-Final Design Profile Sheets\SR70-E10_IX401.dgn
DATE: 2/8/2022
TIME: 4:08:18 PM

Final Plotted By
Final Checked By
Area By
Area Checked By
Original Checked By
Template By
Area By
Application No.
Route No.
Original Plotted By
TAB

PENNSYLVANIA DEPARTMENT OF TRANSPORTATION
CROSS SECTIONS

Dist.	County	Route	Sect.	Prelim. Bk. No.	Final Bk. No.	Sheet No.
12-0	WESTMORELAND	0070	E10			196 OF 198

WHEELING & LAKE ERIE RAILROAD

TCE

LEGAL DRAINAGE EASEMENT

LEGAL DRAINAGE EASEMENT

LEGAL R/W FOR TWP. RD.

5030+50

18" RCCP

BORING R-154
STA. 5030+66.0, 39.0 ft. LT.
EL. 971.5 ft. 0.8 ERa
N60 ▽ 0 hr. Elev.: 965.8 ft.
REC% / (RQD)% ▼ 24 hr. Elev.: 966.9 ft.

12.0'	9, 72, 15, 21, 27, 21, 23, 31	**CLAY** & **SILT**, s/ Sand, t/ Grav, (a-6/cl)
6.0'	13, 13, 27, 28, 61	**SILT** & **CLAY**, s/ Sand, t/ Grav, (A-6/CL)
6.0'	>67/ 0.4'	**CLAY**, l/ Grav (a-6/cl)
	>67/ 0.1'	
	>67/ 0.3'	
1.5'	41(14)	**SANDSTONE**
	62(0)	
14.7'	58(0)	**SHALE w/SANDSTONE**
	63(0)	

40.2'
EL. 931.3'

CERTIFIED CORRECT PLANS
Daniel R. Hellmich
Professional Engineer
Approved by Bureau of Technical Utility Services
PA PUBLIC UTILITY COMMISSION
ATTEST Rosemary Chiavetta
Secretary

LABORATORY TEST SUMMARY - SOILS

					% GRAIN SIZE DISTRIBUTION (AASHTO)							CLASSIFICATION			PLASTICITY PARAMETERS			MOISTURE DENSITY		
BORING NUMBER	STATION & OFFSET	SAMPLE #	TEST DEPTH (FT.)	NATURAL MOISTURE %	GRAVEL %	SAND %	COARSE SAND %	FINE SAND %	FINES %	SILT %	CLAY %	AASHTO	USCS	S.G.	LIQUID LIMIT	PLASTIC LIMIT	P. I.	MAX. DRY DENSITY (PCF)	OPTIMUM MOISTURE %	CBR
R-154	5030+65.0 39 ft. LT.	S-9 to 12	12.0 to 18.0	24.9	8.9	24.0	5.9	18.1	67.1	33.8	33.3	A-6	CL	2.86	37	22	15			

SCALE: 1 INCH = 20 FEET

FILE: pw:\\gfnet-pw.bentley.com:gfnet-pw-01\Documents\Projects\61636\OUTPUT\COMP_01\CIVIL\GEOTY-Final Design Profile Sheets\SR70-E10_IX401.dgn
DATE: 2/8/2022 TIME: 4:08:18 PM

Original Plotted By
Original Checked By
Application No.
Route No.
Finals Plotted By
Finals Checked By
Area By
Area Checked By
Template By
IAB

PENNSYLVANIA DEPARTMENT OF TRANSPORTATION
CROSS SECTIONS

Dist.	County	Route	Sect.	Prelim. Bk. No.	Final Bk. No.	Sheet No.
12-0	WESTMORELAND	0070	E10			197 OF 198

WHEELING & LAKE ERIE RAILROAD

SUBSTITUTE R/W FOR W&LE RAILROAD

RAILROAD PROPERTY LINE

TCE

5034+00

BORING R-144
STA. 5034+00.0, 46.0 ft. LT.
EL. 978.0 ft. 0.8 ERa
N60 ▽ 0 hr. Elev.: 952.0 ft.
----- ▼ 24 hr. Elev.: NR
REC% / (RQD)%

0.4' GRAV
7.1' CLAY, l/ Silt, t/ Sand (a-6/cl)
7.0' CLAY & SILT (A-6/CL)
15.5' CLAY & SILT (A-6/CL)
30.0'
EL. 948.0'

CERTIFIED CORRECT PLANS
Daniel R. Hellrich
Professional Engineer
Approved by Bureau of Technical Utility Services
PA PUBLIC UTILITY COMMISSION
ATTEST Rosemary C. Chiavetta
Secretary

LABORATORY TEST SUMMARY - SOILS

BORING NUMBER	STATION & OFFSET	SAMPLE #	TEST DEPTH (FT.)	NATURAL MOISTURE %	% GRAIN SIZE DISTRIBUTION (AASHTO) GRAVEL %	SAND %	COARSE SAND %	FINE SAND %	FINES %	SILT %	CLAY %	CLASSIFICATION AASHTO	USCS	S.G.	PLASTICITY PARAMETERS LIQUID LIMIT	PLASTIC LIMIT	P. I.	MOISTURE DENSITY MAX. DRY DENSITY (PCF)	OPTIMUM MOISTURE %	CBR
R-144	5034+00.0 46 ft. LT.	S-6 to 9	7.5 to 13.5	27.3	0.0	0.8	0.2	0.6	99.2	45.8	53.4	A-6	CL		33	21	12			
R-144	5034+00.0 46 ft. LT.	S-12	16.5 to 18.0	33.2	0.0	0.4	0.0	0.4	99.6	36.3	63.3	A-6	CL		35	23	12			
R-144	5034+00.0 46 ft. LT.	S-16	22.5 to 24.0	36.5																

SCALE: 1 INCH = 20 FEET

File: pw:\\pfnet-pw.bentley.com:pfnet-pw-01\Documents\Projects\61636\OUTPUTYCOMP_01\C\CIVIL\GEOTYFinal Design Profile Sheets\SR70-E10_1X401.dgn
DATE: 2/8/2022 TIME: 4:08:20 PM
Final Plotted By
Final Checked By
Area By
Area Checked By
Original Checked By
Template By
Area By
Application No.
Route No.
Original Plotted By TAB

PENNSYLVANIA DEPARTMENT OF TRANSPORTATION
CROSS SECTIONS

Dist.	County	Route	Sect.	Prelim. Bk. No.	Final Bk. No.	Sheet No.
12-0	WESTMORELAND	0070	E10			198 OF 198

WHEELING & LAKE ERIE RAILROAD

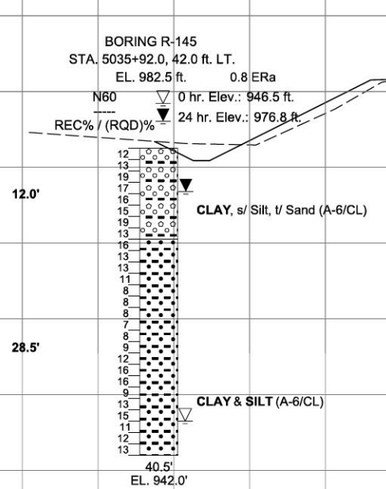

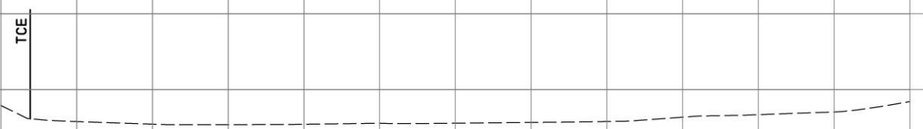

CERTIFIED CORRECT PLANS
David R. Hollrich
Professional Engineer
Approved by Bureau of Technical Utility Services
PA PUBLIC UTILITY COMMISSION
ATTEST
Secretary

LABORATORY TEST SUMMARY - SOILS

BORING NUMBER	STATION & OFFSET	SAMPLE #	TEST DEPTH (FT.)	NATURAL MOISTURE %	% GRAIN SIZE DISTRIBUTION (AASHTO) GRAVEL %	SAND %	COARSE SAND %	FINE SAND %	FINES %	SILT %	CLAY %	CLASSIFICATION AASHTO	USCS	S.G.	PLASTICITY PARAMETERS LIQUID LIMIT	PLASTIC LIMIT	P. I.	MOISTURE DENSITY MAX. DRY DENSITY (PCF)	OPTIMUM MOISTURE %	CBR
R-145	5035+92.0 42 ft. LT.	S-1 to 8	0.0 to 12.0	25.1	0.4	6.4	1.7	4.7	93.2	31.2	62.0	A-6	CL		40	17	23			
R-145	5035+92.0 42 ft. LT.	S-13 to 18	18.0 to 27.0	32.3	0.0	0.4	0.0	0.4	99.6	35.4	64.2	A-6	CL	2.76	35	23	12			

SCALE: 1 INCH = 20 FEET

FILE: pw:\\gfnet-pw.bentley.com:gfnet-pw-01\Documents\Projects\61636\OUTPUT\COMP_01\CIVIL\GEOTY-Final Design Profile Sheets\SR70-E10_1X401.dgn
DATE: 2/8/2022 TIME: 4:08:22 PM

Final Plotted By
Final Checked By
Area By
Area Checked By
Original Checked By
Template By
Area By
Application No.
Route No. 148
Original Plotted By

ROSTRAVER TOWNSHIP SEWAGE AUTHORITY

WESTMORELAND COUNTY, PENNSYLVANIA

PennDOT S.R. 0070, SECTION E10

I-70/SR 51 INTERCHANGE PROJECT

PROJECT LOCATION

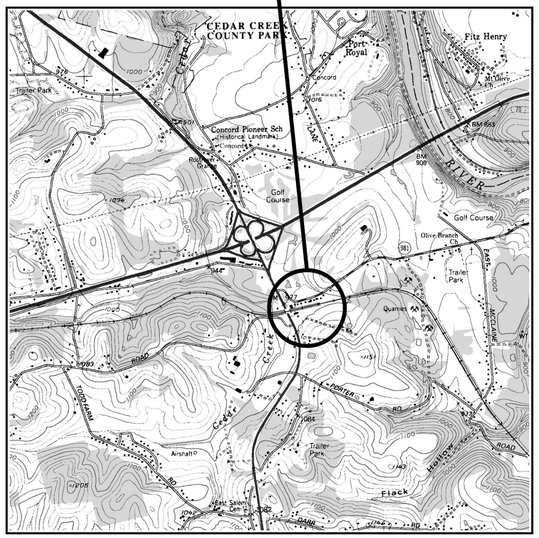
CEDAR CREEK COUNTY PARK
Port Royal
Fitz Henry
Concord
Concord Pioneer Sch
(Historical Landmark)
Golf Course
Olive Branch Ch
Trailer Park
Quarries
Airshaft
Flack
Foster
Cedar Creek Road
Mt Olivet Rd
Foster Rd
Flack Rd
Trailer Park Rd
Olive Branch Rd
Sewage Treatment Plant
Rostraver Township Municipal Building
Rostraver Township Municipal Park
Rostraver Township Municipal Park Rd
Rostraver Township Municipal Park Entrance
Rostraver Township Municipal Park Exit
Rostraver Township Municipal Park Parking
Rostraver Township Municipal Park Pavilion
Rostraver Township Municipal Park Playground
Rostraver Township Municipal Park Ballfield
Rostraver Township Municipal Park Basketball Court
Rostraver Township Municipal Park Tennis Court
Rostraver Township Municipal Park Soccer Field
Rostraver Township Municipal Park Football Field
Rostraver Township Municipal Park Track
Rostraver Township Municipal Park Swimming Pool
Rostraver Township Municipal Park Picnic Area
Rostraver Township Municipal Park Restroom
Rostraver Township Municipal Park Concession Stand
Rostraver Township Municipal Park Maintenance Building
Rostraver Township Municipal Park Storage Building
Rostraver Township Municipal Park Water Tower
Rostraver Township Municipal Park Electric Substation
Rostraver Township Municipal Park Gas Station
Rostraver Township Municipal Park Convenience Store
Rostraver Township Municipal Park Post Office
Rostraver Township Municipal Park Fire Station
Rostraver Township Municipal Park Police Station
Rostraver Township Municipal Park Library
Rostraver Township Municipal Park School
Rostraver Township Municipal Park Church
Rostraver Township Municipal Park Cemetery
Rostraver Township Municipal Park Golf Course
Rostraver Township Municipal Park Trailer Park
Rostraver Township Municipal Park Quarries
Rostraver Township Municipal Park Airshaft
Rostraver Township Municipal Park Flack
Rostraver Township Municipal Park Foster
Rostraver Township Municipal Park Cedar Creek
Rostraver Township Municipal Park Olive Branch
Rostraver Township Municipal Park Concord
Rostraver Township Municipal Park Port Royal
Rostraver Township Municipal Park Fitz Henry
Rostraver Township Municipal Park Mt Olivet
Rostraver Township Municipal Park Trailer Park Rd
Rostraver Township Municipal Park Olive Branch Rd
Rostraver Township Municipal Park Flack Rd
Rostraver Township Municipal Park Foster Rd
Rostraver Township Municipal Park Cedar Creek Road
Rostraver Township Municipal Park Mt Olivet Rd
Rostraver Township Municipal Park Concord
Rostraver Township Municipal Park Port Royal
Rostraver Township Municipal Park Fitz Henry
Rostraver Township Municipal Park Trailer Park
Rostraver Township Municipal Park Olive Branch Ch
Rostraver Township Municipal Park Golf Course

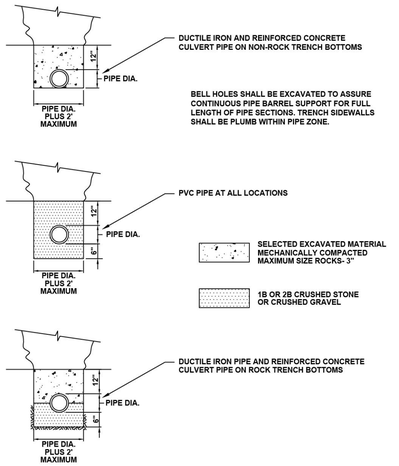

ROSTRAVER TOWNSHIP SEWAGE AUTHORITY 1744 Rostraver Road Belle Vernon, PA 15012		TRENCH PIPE ZONE DETAILS
Not to scale	April 2013	Standard Detail SD-001

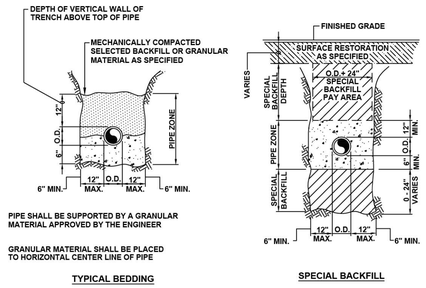

ROSTRAVER TOWNSHIP SEWAGE AUTHORITY 1744 Rostraver Road Belle Vernon, PA 15012		TRENCH DETAILS
Not to scale	April 2013	Standard Detail SD-002

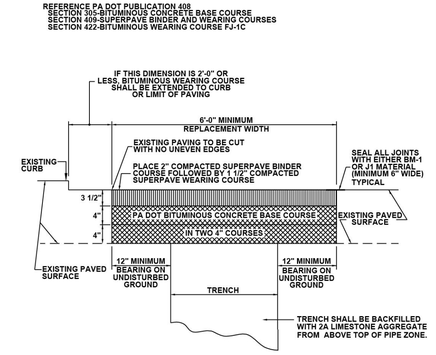

NOTE: DURING COLD WEATHER WHEN SUPERPAVE MATERIAL IS NOT AVAILABLE FROM THE ASPHALT PLANTS THE TRENCH SHALL BE BACKFILLED WITH BEDDING MATERIAL TO AN ELEVATION WITHIN 3" OF THE ROAD SURFACE. THE TRENCH SHALL THEN BE SURFACED WITH A TEMPORARY PATCH OF COLD PATCH MATERIAL. AS SOON AS THE ASPHALT PLANTS OPEN IN THE SPRING, THE CONTRACTOR SHALL REMOVE THE COLD PATCH MATERIAL AND SAW-CUT THE REQUIRED BENCHES AND THE SUPERPAVE MATERIAL SHALL THEN BE PLACED AND SEALED. THE CONTRACTOR SHALL BE RESPONSIBLE FOR THE MAINTENANCE ON THE TEMPORARY PATCH AND SHALL KEEP A SMOOTH RIDING SURFACE ON THE STREET.

* FOR CONCRETE SURFACED ROADWAYS, THE REQUIREMENTS OF PADOT PUBLICATION 408 ARE REQUIRED.

ROSTRAVER TOWNSHIP SEWAGE AUTHORITY 1744 Rostraver Road Belle Vernon, PA 15012		TRENCH BACKFILL AND PAVEMENT REPLACEMENT REQUIREMENTS FOR MUNICIPAL ROADS
Not to scale	April 2013	Standard Detail SD-003

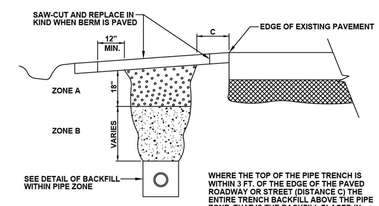

WHERE THE TOP OF THE PIPE TRENCH IS WITHIN 3 FT. OF THE EDGE OF THE PAVED ROADWAY OR STREET (DISTANCE C) THE ENTIRE TRENCH BACKFILL ABOVE THE PIPE ZONE, THAT IS THE BACKFILL PLACED IN ZONES A AND B SHALL CONSIST OF 2-A LIMESTONE MATERIAL MECHANICALLY COMPACTED IN 6" LAYERS.

WHERE THE TOP OF THE PIPE TRENCH IS GREATER THAN 3 FT. FROM THE EDGE OF THE PAVED ROADWAY (DISTANCE C) BACKFILL PLACED IN ZONE B SHALL BE EXCAVATED MATERIAL FROM THE TRENCH, FREE OF ROCKS LARGER THAN 3" AND MECHANICALLY COMPACTED IN 6" LAYERS. BACKFILL MATERIAL PLACED IN ZONE A (THE TOP 18" OF THE TRENCH) SHALL BE 2-A LIMESTONE MATERIAL MECHANICALLY COMPACTED IN 6" LAYERS.

WHERE THE BERM IS NOT PLANTED OR PAVED IT SHALL BE RESTORED FOR ITS ENTIRE WIDTH BY APPLICATION OF RT-2W BITUMINOUS MATERIAL AT A RATE OF 0.2 TO 0.5 GALLONS PER SQUARE YARD DEPENDING UPON LOCATION AND PREVAILING TEMPERATURES AT TIME OF APPLICATION.

ROSTRAVER TOWNSHIP SEWAGE AUTHORITY 1744 Rostraver Road Belle Vernon, PA 15012		TRENCH BACKFILL WITHIN ROADWAY OR STREET BERMS
Not to scale	April 2013	Standard Detail SD-004

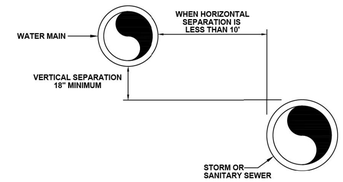

NOTES:

1. WHEN THE HORIZONTAL SEPARATION OF THE WATER MAIN AND SEWER LINE IS LESS THAN 10', THE VERTICAL SEPARATION BETWEEN THE TOP (CROWN) OF THE SEWER LINE AND THE BOTTOM (INVERT) OF THE WATER MAIN SHALL BE AT LEAST 18". SEWER LINE SHALL BE ENCASED IN CONCRETE WHERE SEWER/ WATER LINE CROSSINGS OCCUR AND WHERE CONDITIONS PREVENT AN 18" VERTICAL SEPARATION.

2. THERE SHALL BE AT LEAST A 10' HORIZONTAL SEPARATION BETWEEN WATER MAINS AND SANITARY SEWER FORCE MAINS. FORCE MAINS CROSSING WATER MAINS SHALL BE LAID TO PROVIDE A MINIMUM VERTICAL DISTANCE OF 18" BETWEEN THE OUTSIDE OF THE FORCE MAIN AND THE OUTSIDE OF THE WATER MAIN.

ROSTRAVER TOWNSHIP SEWAGE AUTHORITY 1744 Rostraver Road Belle Vernon, PA 15012		DESIRED DISTANCES BETWEEN WATER AND SEWER PIPES
Not to scale	April 2013	Standard Detail SD-005

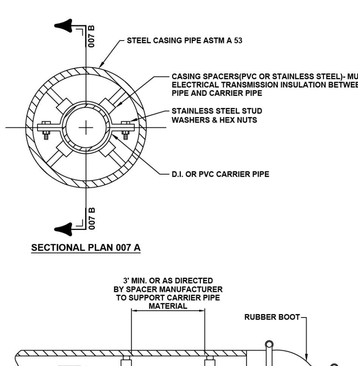

ROSTRAVER TOWNSHIP SEWAGE AUTHORITY 1744 Rostraver Road Belle Vernon, PA 15012		STEEL CASING AND D.I. OR PVC CARRIER PIPES INSTALLED BY BORING
Not to scale	April 2013	Standard Detail SD-007

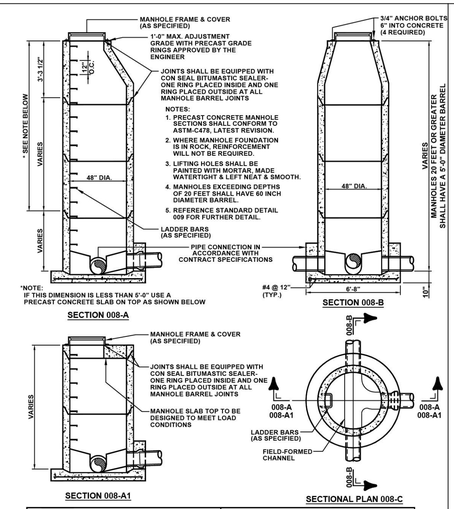

ROSTRAVER TOWNSHIP SEWAGE AUTHORITY 1744 Rostraver Road Belle Vernon, PA 15012		PRECAST CONCRETE MANHOLE FOR SEWERS 8" TO 18"
Not to scale	April 2013	Standard Detail SD-008

MANHOLE BARREL SHALL BE PRE-CAST CONCRETE ASTM C478 OR GLASS FIBER REINFORCED ASTM D3753. FOR CONNECTING PIPES 18" DIAMETER OR LESS, THE MANHOLE BARREL SHALL BE 4' DIAMETER. WHERE THERE ARE LARGER CONNECTING PIPES OR INSIDE DROP CONNECTIONS, THE DIAMETER SHALL BE 5'.

REFERENCE DETAILS

TOP OF MANHOLE	SD-008
MANHOLE FRAME & COVER	SD-015 OR SD-016
INFLOW PROTECTOR	SD-017
STEPS	SD-018
PIPE CONNECTOR	SHALL BE IN ACCORDANCE WITH THE CONTRACT SPECIFICATIONS

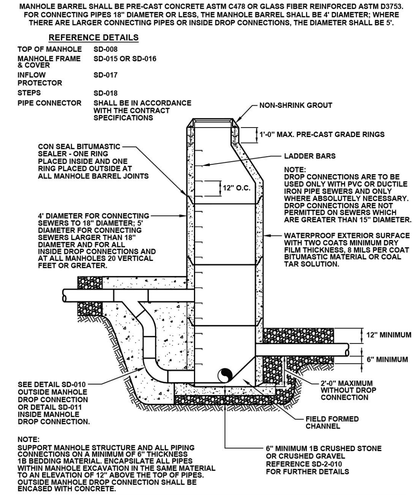

ROSTRAVER TOWNSHIP SEWAGE AUTHORITY 1744 Rostraver Road Belle Vernon, PA 15012		MANHOLE FOR SEWERS FOR DEPTHS GREATER THAN 5 FEET
Not to scale	April 2013	Standard Detail SD-009

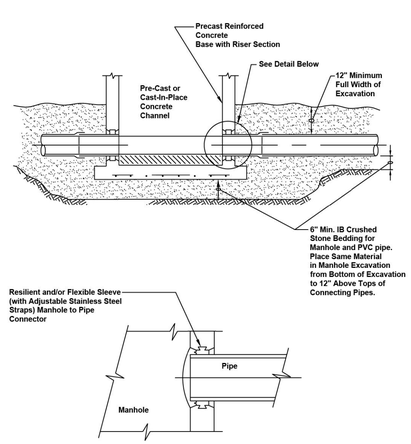

ROSTRAVER TOWNSHIP SEWAGE AUTHORITY 1744 Rostraver Road Belle Vernon, PA 15012		PRECAST MANHOLE BASE DETAIL
Not to scale	April 2013	Standard Detail SD-012

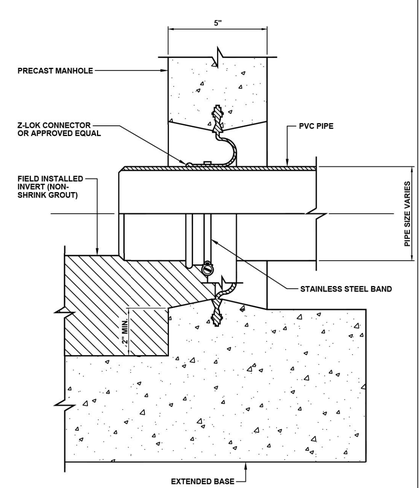

ROSTRAVER TOWNSHIP SEWAGE AUTHORITY 1744 Rostraver Road Belle Vernon, PA 15012		MANHOLE CONNECTION FOR PVC PIPE (PRECAST B
Not to scale	April 2013	Standard

CERTIFIED CORRECT PLANS
David R. Hillmuth
Professional Engineer
Approved by Bureau of Technical Utility Services
PA PUBLIC UTILITY COMMISSION
ATTEST Secretary

COMMONWEALTH OF PENNSYLVANIA
REGISTERED PROFESSIONAL
DAVID ALAN COLDREN, JR.
ENGINEER NO. PE 061928-E

Copyright © 2021 KLH Engineers, Inc., All Rights Reserved Worldwide

Revisions		
Date		
5/2021	MH ALIGNMENT FOR RR	
6/2021	R/R PROPERTY NOTE	
8/23/21	RELEASE FOR BID	
8/30/21	REVISED MH 11C & MH 11D	

5173 Campbells Run Road
Pittsburgh, PA 15205
Phone: 412.494.0510
Fax: 412.494.0426
info@klhengineers.com

KLH ENGINEERS, INC

ROSTRAVER TOWNSHIP SEWAGE AUTHORITY
WESTMORELAND COUNTY, PENNSYLVANIA

PENNDOT S.R. 0070, SECTION E10 - L-70/SR 51 INTERCHANGE PROJECT
STANDARD DETAILS

Scale:	As Shown
Date:	02/2021
Drawn By:	RBD
Checked By:	MJE
Approved By:	DAC
Order No.	288-94
Drawing No.	SD1
Sheet No.	2 of 16

Y:\288 Rostraver Township Sewage Authority\288-94 PennDOT SR 51 - I-70 Project\Dwgs\SD\288-94-001.dwg (SD1) - Jan 13 2022 07:14:51 am PLOTTED BY: BDudley

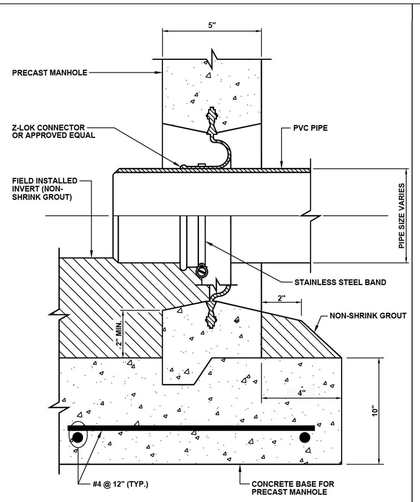

ROSTRAVER TOWNSHIP SEWAGE AUTHORITY 1744 Rostraver Road Belle Vernon, PA 15012		MANHOLE CONNECTION FOR PVC PIPE (CAST-IN-PLACE BASE)
Not to scale	April 2013	Standard Detail SD-014

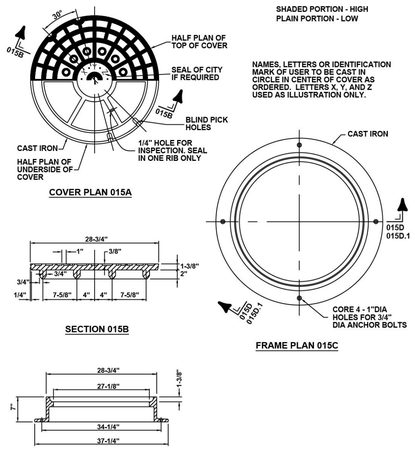

ROSTRAVER TOWNSHIP SEWAGE AUTHORITY 1744 Rostraver Road Belle Vernon, PA 15012		STANDARD CAST IRON MANHOLE FRAME AND COVER
Not to scale	April 2013	Standard Detail SD-015

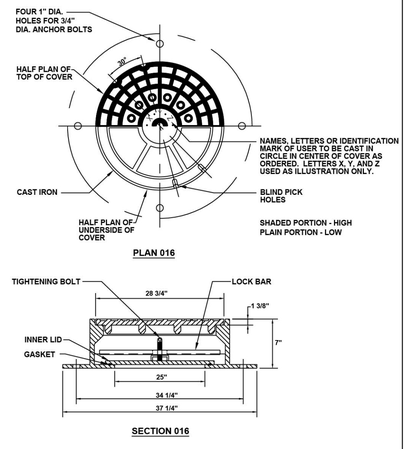

ROSTRAVER TOWNSHIP SEWAGE AUTHORITY 1744 Rostraver Road Belle Vernon, PA 15012		WATERTIGHT MANHOLE (WT) FRAME AND COVER
Not to scale	April 2013	Standard Detail SD-016

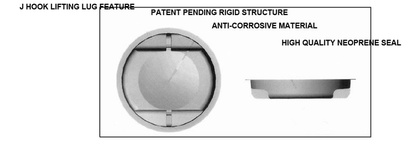

NOTES:

1. ABS INFLOW PROTECTOR SHALL BE MAN-PAN OR APPROVED EQUAL AND SHALL BE INSTALLED WITH ALL NON-WATER TIGHT MANHOLE COVERS.
2. ALL INFLOW PROTECTORS SHALL BE INSTALLED WITH VENTS AND SHALL HAVE A GAS RELIEF VALVE

ROSTRAVER TOWNSHIP SEWAGE AUTHORITY 1744 Rostraver Road Belle Vernon, PA 15012		MANHOLE INFLOW PROTECTOR
Not to scale	April 2013	Standard Detail SD-017

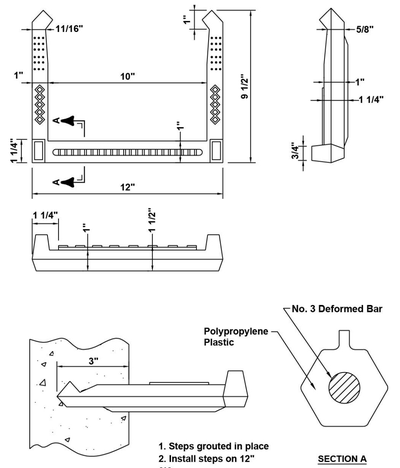

ROSTRAVER TOWNSHIP SEWAGE AUTHORITY 1744 Rostraver Road Belle Vernon, PA 15012		POLYPROPYLENE PLASTIC MANHOLE STEP
Not to scale	April 2013	Standard Detail SD-018

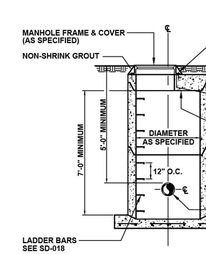

NOTES:

1. PRECAST CONCRETE MANHOLE SECTIONS SHALL CONFORM TO ASTM-C478, LATEST REVISION.
2. WHERE MANHOLE FOUNDATION IS IN ROCK, REINFORCEMENT WILL NOT BE REQUIRED.
3. LIFTING HOLES SHALL BE PAINTED WITH MORTAR, MADE WATERTIGHT AND LEFT NEAT & SMOOTH.
4. SUPPORT MANHOLE STRUCTURE AND ALL PIPING CONNECTIONS ON A MINIMUM OF 6" THICKNESS 1B BEDDING MATERIAL. ENCAPSULATE ALL PIPES WITHIN MANHOLE EXCAVATION IN THE SAME MATERIAL TO AN ELEVATION OF 12" ABOVE THE TOPS OF PIPES.

ROSTRAVER TOWNSHIP SEWAGE AUTHORITY 1744 Rostraver Road Belle Vernon, PA 15012		PRECAST CONCRETE MANHOLE VAULT
Not to scale	April 2013	Standard Detail SD-024

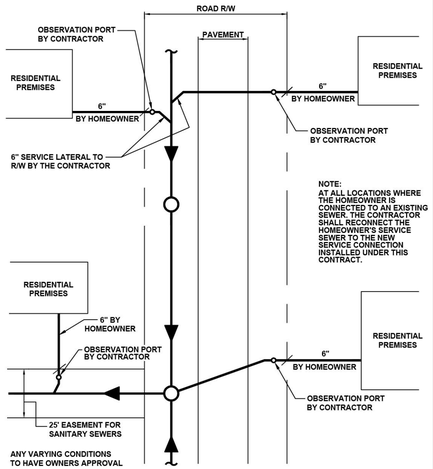

ROSTRAVER TOWNSHIP SEWAGE AUTHORITY 1744 Rostraver Road Belle Vernon, PA 15012		SANITARY SEWER CONNECTIONS WITH OBSERVATION PORT
Not to scale	April 2013	Standard Detail SD-026

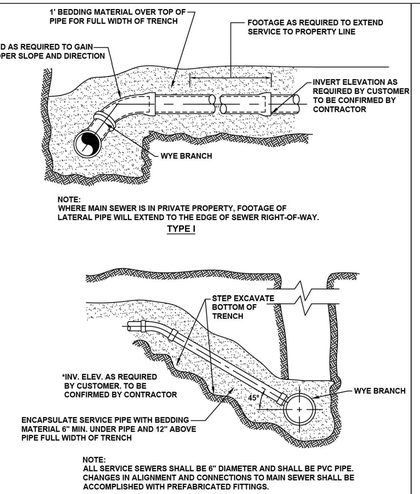

ROSTRAVER TOWNSHIP SEWAGE AUTHORITY 1744 Rostraver Road Belle Vernon, PA 15012		TYPICAL SANITARY SEWER CONNECTIONS
Not to scale	April 2013	Standard Detail SD-027

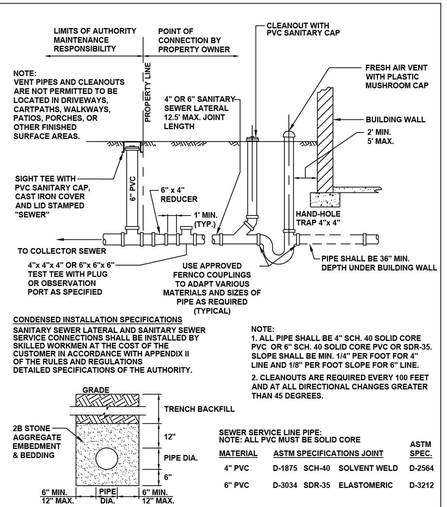

ROSTRAVER TOWNSHIP SEWAGE AUTHORITY 1744 Rostraver Road Belle Vernon, PA 15012		SERVICE CONNECTION TO SANITARY SEWER MAIN FROM A NEW BUILDING
Not to scale	April 2013	Standard Detail SD-028

CERTIFIED CORRECT PLANS

David R Fullerton
Professional Engineer
Approved by Bureau of Technical Utility Services

PA PUBLIC UTILITY COMMISSION

ATTEST
Secretary

COMMONWEALTH OF PENNSYLVANIA
DAVID ALAN COLDREN, JR.
ENGINEER
NO. PE 080628-E
PROFESSIONAL
REGISTERED

Copyright © 2021 KLH Engineers, Inc., All Rights Reserved Worldwide

Revisions		
Date		
5/2021	MH ALIGNMENT FOR RR	
6/2021	R/R PROPERTY NOTE	
8/23/21	RELEASE FOR BID	
8/30/21	REVISED MH 11C & MH 11D	

5173 Campbells Run Road
Pittsburgh, PA 15205
Phone: 412.494.0510
Fax: 412.494.0426
info@klhengineers.com

KLH ENGINEERS, INC

ROSTRAVER TOWNSHIP SEWAGE AUTHORITY
WESTMORELAND COUNTY, PENNSYLVANIA

PENNDOT S.R. 0070, SECTION E10 - I-70/SR 51 INTERCHANGE PROJECT
STANDARD DETAILS

Scale:	As Shown		
Date:	02/2021	Drawn By:	RBD
		Checked By:	MJE
		Approved By:	DAC

Order No. 288-94

Drawing No. SD2

Sheet No. 3 of 16

Y:\288 Rostraver Township Sewage Authority\288-94 PennDOT SR 51 - I-70 Project\Dwgs\SD288-94-002.dwg (SD2) - Jan 13 2022 07:26:31 on PLOTTED BY: BDudley

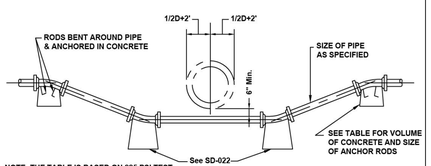

NOTE: THE TABLE IS BASED ON 225 PSI TEST PRESSURE. ALL BLOCKS HAVING LENGTH OF 3'-0" OR MORE TO BE REINFORCED WITH #4 @ 6" PLACED 3" FROM TOP OF BLOCK.

PIPE SIZE	TOTAL FORCE (lbs)	VOLUME IN CUBIC FEET			SIZE AND NO. OF ANCHOR RODS		
		45 DEGREE BENDS	22 1/2 DEGREE BENDS	11 1/4 DEGREE BENDS	45 DEGREE BENDS	22 1/2 DEGREE BENDS	11 1/4 DEGREE BENDS
4	4275	22.7	11.6	5.9	1-#4	1-#4	1-#4
6	8550	45.5	23.3	11.9	2-#4	1-#4	1-#4
8	14625	77.8	39.6	20.3	2-#4	2-#4	1-#4
10	21825	116.1	59.1	30.3	2-#4	2-#4	2-#4
12	30825	164.0	83.5	42.8	2-#5	2-#4	2-#4
14	41400	220.2	112.1	57.5	2-#6	2-#4	2-#4
16	53550	284.9	145.0	73.4	2-#7	2-#5	2-#4
18	67275	357.9	182.2	93.4	2-#7	2-#5	2-#4
20	82575	439.2	223.6	114.7	2-#8	2-#6	2-#4
24	117675	626.0	318.7	183.4	2-#9	2-#7	2-#5

ROSTRAVER TOWNSHIP SEWAGE AUTHORITY 1744 Rostraver Road Belle Vernon, PA 15012		CONCRETE ANCHORS AND METHOD OF LAYING MAINS UNDER OBSTRUCTIONS
Not to scale	April 2013	Standard Detail SD-021

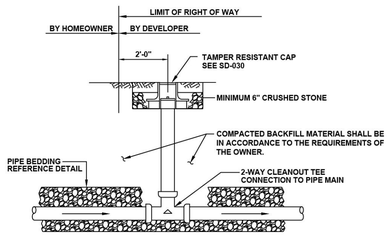

OBSERVATION PORT DETAIL 029A

ROSTRAVER TOWNSHIP SEWAGE AUTHORITY 1744 Rostraver Road Belle Vernon, PA 15012		SANITARY SEWER CONNECTION OBSERVATION PORT
Not to scale	April 2013	Standard Detail SD-029

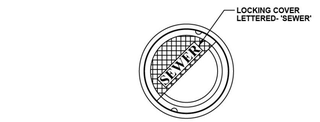

CAP COVER

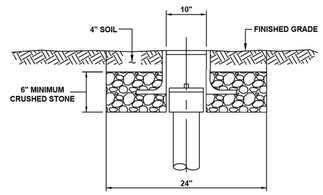

CAP SECTION

ROSTRAVER TOWNSHIP SEWAGE AUTHORITY 1744 Rostraver Road Belle Vernon, PA 15012		SEWER CLEAN OUT AND OBSERVATION PORT TAMPER RESISTANT CAP
Not to scale	April 2013	Standard Detail SD-030

RESTORATION CONDITION	SEED MIX & SOWING RATE (% BY WEIGHT)
TEMPORARY COVER	100% ANNUAL RYEGRASS SOW 9 lbs. per 1000 sq. yds. MAR. thru MAY / AUG. thru SEPT.
ROADSIDE; NON-MOWED	80% KENTUCKY 31, FESCUE 20% PENNLAWN RED FESCUE SOW 21 lbs. per 1000 sq. yds. MAR. thru MAY / AUG. thru SEPT.
ROADSIDE; MOWED	50% KENTUCKY BLUEGRASS 30% PENNLAWN RED FESCUE 20% PERENNIAL RYEGRASS SOW 21 lbs. per 1000 sq. yds. MAR. thru MAY / AUG. thru SEPT.
BANK AREAS	45% CROWNVETCH 55% ANNUAL RYEGRASS SOW 9 lbs. per 1000 sq. yds. ANYTIME EXCEPT SEPT. OR OCT.
LAWNS ("A" LAWN MIX)	31% KENTUCKY BLUEGRASS 24% WIND STAR PERENNIAL RYEGRASS 20% SHINING STAR PERENNIAL RYEGRASS 20% BOREAL CREEPING RED FESCUE NOT MORE THAN 5% INVERT MATER 0% WEED SEED SOW 21 lbs. per 1000 sq. yds. MAR. thru MAY / AUG. thru SEPT.
OPEN FIELDS; NON-CULTIVATED PASTURE	100% TIMOTHY SOW 9 lbs. per 1000 sq. yds. MAR. thru MAY / AUG. thru SEPT.
OPEN FIELDS; CULTIVATED	100% ANNUAL RYEGRASS SOW 9 lbs. per 1000 sq. yds. MAR. thru MAY / AUG. thru SEPT.
WOODS; SPARSE	100% RED FESCUE SOW 36 lbs. per 1000 sq. yds. MAR. thru MAY / AUG. thru SEPT.

SOIL CONDITIONERS REQUIRED FOR RESTORATION:

RAW FINELY GROUND LIMESTONE @ 100 lbs. per 1000 sq. ft. APPLIED ONE WEEK BEFORE SEEDING

FERTILIZER- COMPLETE COMMERCIAL FERTILIZER WITH 5-10-5 ANALYSIS @ 50 lbs. per 1000 sq. ft.

ROSTRAVER TOWNSHIP SEWAGE AUTHORITY 1744 Rostraver Road Belle Vernon, PA 15012		REQUIRED SURFACE RESTORATION IN UNPAVED LOCATIONS
Not to scale	April 2013	Standard Detail SD-034

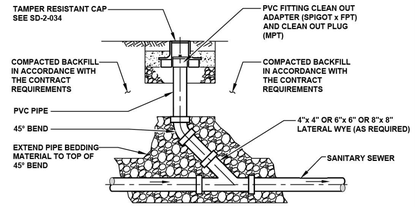

IN-LINE CLEANOUT DETAIL 2-032-A

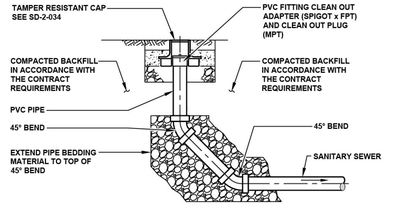

END-LINE CLEANOUT DETAIL 2-032-B

Revised 7-22-14

KLH ENGINEERS, INC. 5173 Campbells Run Road Pittsburgh, PA 15205		~~IN-LINE AND END-LINE CLEANOUT FOR PVC SEWER~~
Not to scale	January 2019	Standard Detail SD-2-032

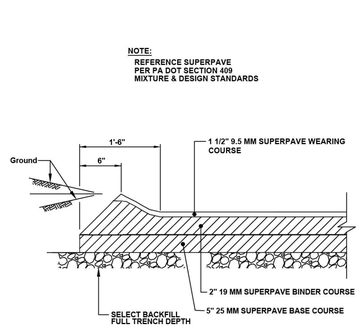

KLH ENGINEERS, INC. 5173 Campbells Run Road Pittsburgh, PA 15205		~~ASPHALT WEDGE CURB RESTORATION~~
Not to scale	January 2019	Standard Detail SD-2-077

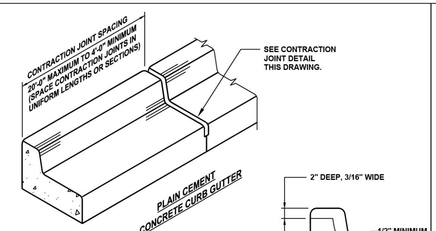

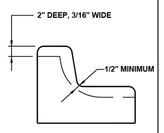

CONTRACTION JOINT DETAIL

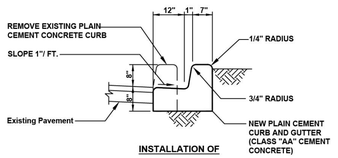

INSTALLATION OF CURB AND GUTTER

KLH ENGINEERS, INC. 5173 Campbells Run Road Pittsburgh, PA 15205		~~PLAIN CEMENT CONCRETE CURB AND GUTTER~~
Not to scale	January 2019	Standard Detail SD-2-078

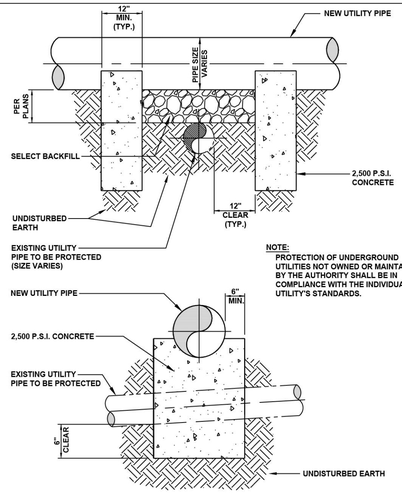

KLH ENGINEERS, INC. 5173 Campbells Run Road Pittsburgh, PA 15205		~~PIPE SADDLE DETAIL~~
Not to scale	January 2019	Standard Detail SD-2-137

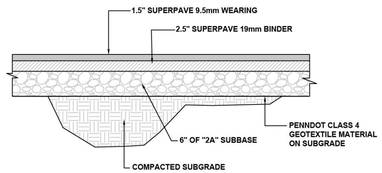

KLH ENGINEERS, INC. 5173 Campbells Run Road Pittsburgh, PA 15205		~~ASPHALT PARKING DETAIL~~
Not to scale	January 2019	Standard Detail SD-2-148

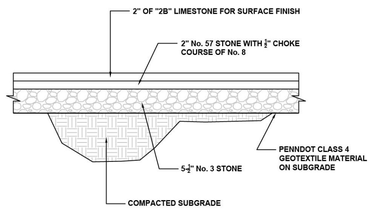

KLH ENGINEERS, INC. 5173 Campbells Run Road Pittsburgh, PA 15205		~~GRAVEL ACCESS ROAD OR PARKING LOT DETAIL~~
Not to scale	January 2019	Standard Detail SD-2-149

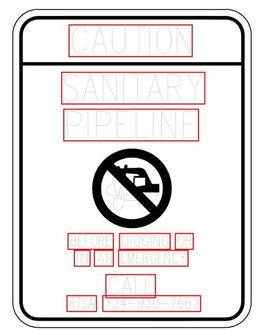

Railroad R/R Sign Detail (By Others)

CERTIFIED CORRECT PLANS
David R Hallowich
Professional Engineer
Approved by Bureau of Technical Utility Services
PA PUBLIC UTILITY COMMISSION
ATTEST
Secretary

COMMONWEALTH OF PENNSYLVANIA REGISTERED PROFESSIONAL DAVID ALAN COLDREN, JR. ENGINEER NO. PE 061328-E

Copyright © 2021 KLH Engineers, Inc., All Rights Reserved Worldwide

Revisions		
MH ALIGNMENT FOR RR	5/2021	
RR PROPERTY NOTE	6/2021	
RELEASE FOR BID	8/23/21	
REVISED MH 11C & MH 11D	8/30/21	

5173 Campbells Run Road
Pittsburgh, PA 15205
Phone: 412.494.0650
Fax: 412.494.0626
info@klhengineers.com

KLH ENGINEERS, INC

ROSTRAVER TOWNSHIP SEWAGE AUTHORITY
WESTMORELAND COUNTY, PENNSYLVANIA
PENNDOT S.R. 0070, SECTION E10 - I-70/SR 51 INTERCHANGE PROJECT
STANDARD DETAILS

Scale:	As Shown
Date:	02/2021
Drawn By:	RBD
Checked By:	MJE
Approved By:	DAC

Order No. 288-94

Drawing No. SD3

Sheet No. 4 of 16

Y:\288 Rostraver Township Sewage Authority\288-94 PennDOT SR 51 - I-70 Project\Dwgs\SD288-94-003.dwg <SD3> - Jan 19 2022 07:22:22 am PLOTTED BY: BDudley

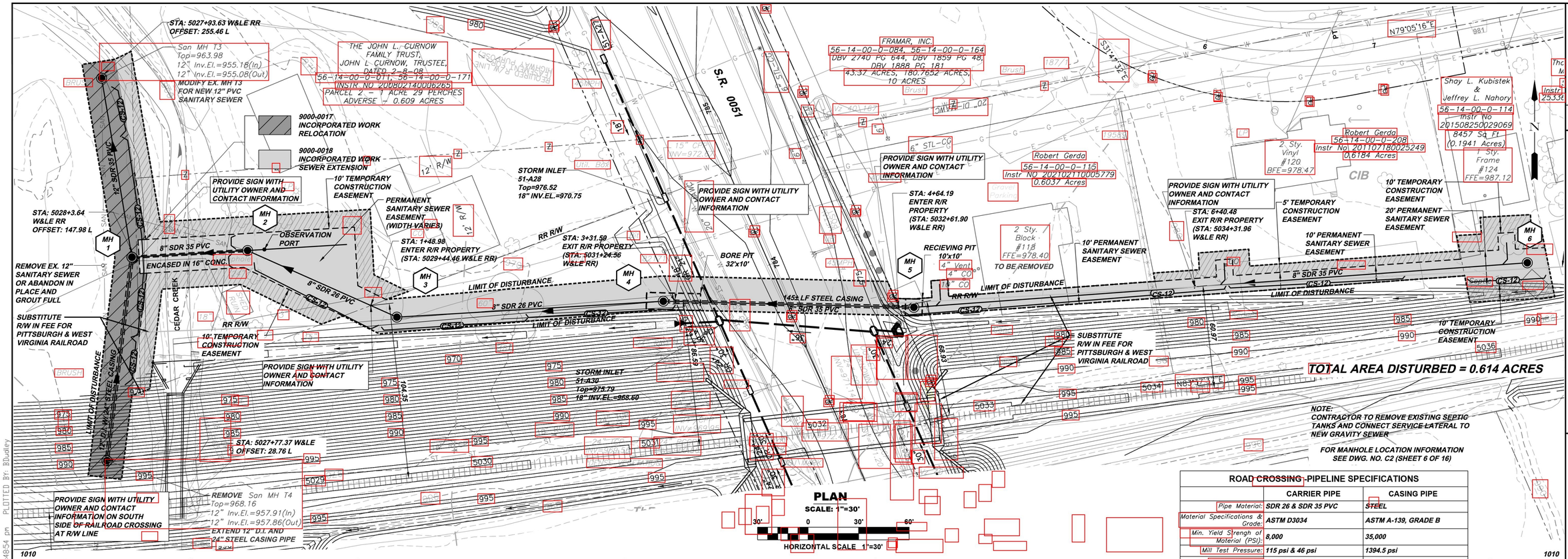

ROAD CROSSING PIPELINE SPECIFICATIONS	CARRIER PIPE	CASING PIPE
Pipe Material:	SDR 26 & SDR 35 PVC	STEEL
Material Specifications & Grade:	ASTM D3034	ASTM A-139, GRADE B
Min. Yield Strengh of Material (PSI):	8,000	35,000
Mill Test Pressure:	115 psi & 46 psi	1394.5 psi
Inside Diameter:	7.754" & 7.920"	15.75"
Outside Diameter:	8.400"	16"
Wall Thickness:	0.323" & 0.240"	0.375"
Type of Seam:	N/A	WELDED
Laying Lengths:	20 FEET	20 FEET
Type of Joints:	PUSH ON/RESTRAINED	WELDED

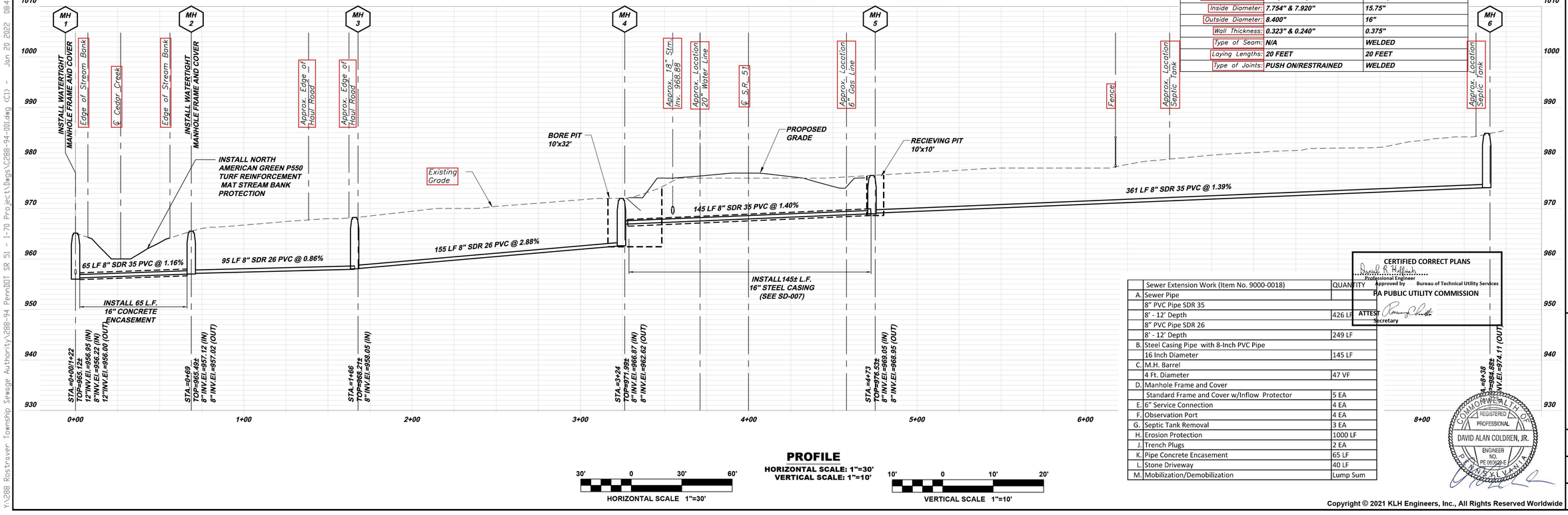

PROFILE
HORIZONTAL SCALE: 1"=30'
VERTICAL SCALE: 1"=10'

HORIZONTAL SCALE 1"=30'

VERTICAL SCALE 1"=10'

	Sewer Extension Work (Item No. 9000-0018)	QUANTITY
A.	Sewer Pipe	
	8" PVC Pipe SDR 35	
	8' - 12' Depth	426 LF
	8" PVC Pipe SDR 26	
	8' - 12' Depth	249 LF
B.	Steel Casing Pipe with 8-Inch PVC Pipe	
	16 Inch Diameter	145 LF
C.	M.H. Barrel	
	4 Ft. Diameter	47 VF
D.	Manhole Frame and Cover	
	Standard Frame and Cover w/Inflow Protector	5 EA
E.	6" Service Connection	4 EA
F.	Observation Port	4 EA
G.	Septic Tank Removal	3 EA
H.	Erosion Protection	1000 LF
J.	Trench Plugs	2 EA
K.	Pipe Concrete Encasement	65 LF
L.	Stone Driveway	40 LF
M.	Mobilization/Demobilization	Lump Sum

CERTIFIED CORRECT PLANS
David A. Coldren
Professional Engineer
Approved by Bureau of Technical Utility Services
PA PUBLIC UTILITY COMMISSION
ATTEST
Secretary

COMMONWEALTH OF PENNSYLVANIA
REGISTERED PROFESSIONAL
DAVID ALAN COLDREN, JR.
ENGINEER NO. PE 080628-E

Copyright © 2021 KLH Engineers, Inc., All Rights Reserved Worldwide

Revisions	Date
MH ALIGNMENT FOR RR	5/2021
R/R PROPERTY NOTE	6/2021
RELEASE FOR BID	8/23/21
REVISED MH 11C & MH 11D	8/30/21

5173 Campbells Run Road
Pittsburgh, PA 15205
Phone: 412.494.0510
Fax: 412.494.0426
info@klhengineers.com
KLH ENGINEERS, INC

ROSTRAVER TOWNSHIP SEWAGE AUTHORITY
WESTMORELAND COUNTY, PENNSYLVANIA
PENNDOT S.R. 0070, SECTION E10 - I-70/SR 51 INTERCHANGE PROJECT
PLAN & PROFILE

Scale:	As Shown
Date:	02/2021
Drawn By:	RBD
Checked By:	MJE
Approved By:	DAC

Order No. 288-94
Drawing No. C1
Sheet No. 5 of 16

Y:\288 Rostraver Township Sewage Authority\288-94 PennDOT SR 51 - I-70 Project\Dwgs\C288-94-001.dwg (C1) - Jan 20 2022 08:48:54 pm PLOTTED BY: BDudley

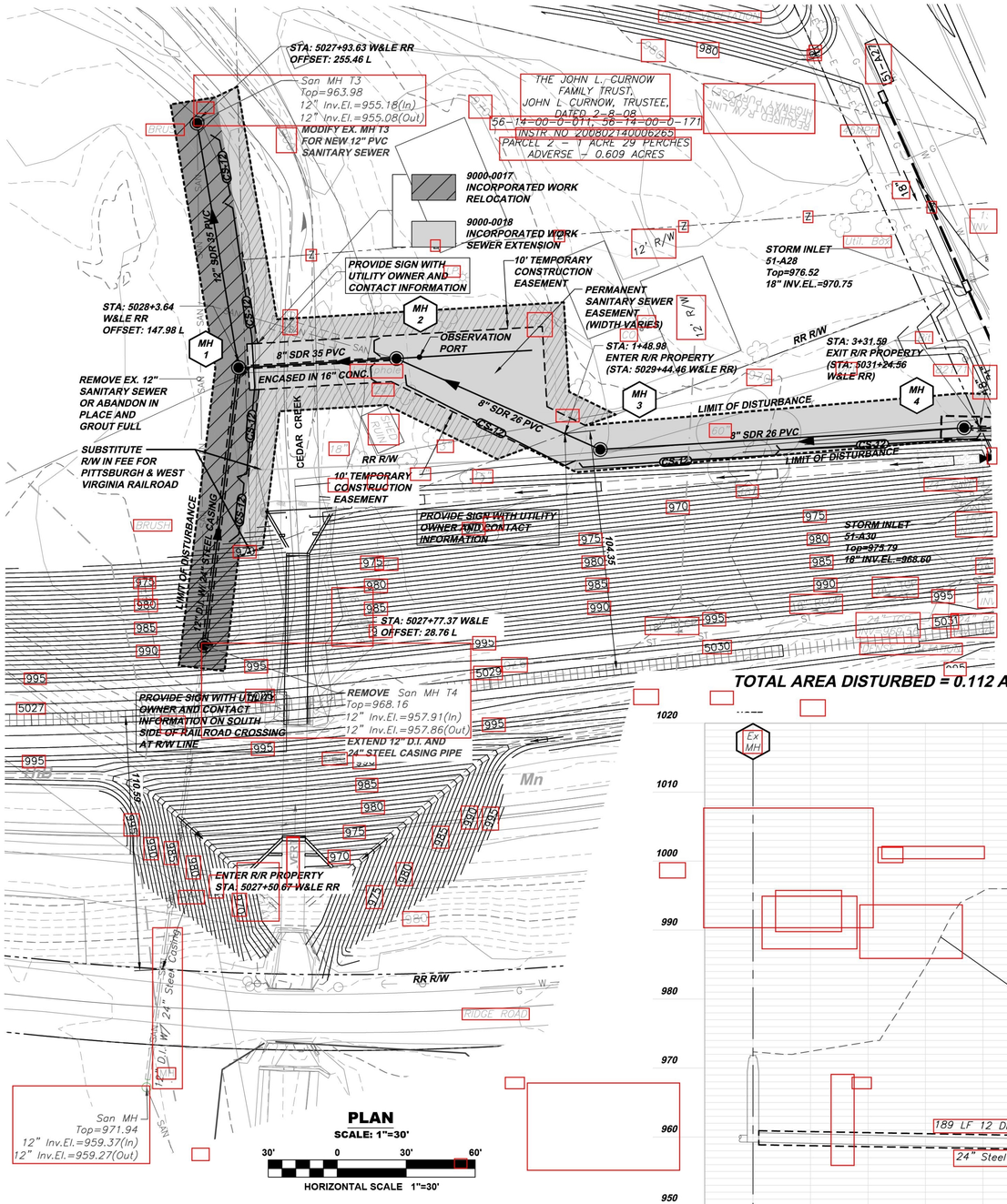

QUANTITIES IN THIS TABLE APPLY TO ALL WORK ASSOCIATED WITH ITEM NO. 9000-0017. THIS WORK IS SHOWN ON BOTH SHEET NO. 6 & 7.

	Sewer Relocation Work (Item No. 9000-0017)	QUANTITY
A.	Sewer Pipe	
	8" PVC Pipe SDR 35	
	8' - 12' Depth	468 LF
B.	Steel Casing Pipe	
	16 Inch Diameter with 8-Inch PVC Pipe	110 LF
	24 Inch Diameter with 12-Inch Ductile Iron Pipe	122 LF
C.	M.H. Barrel	
	4 Ft. Diameter	57 VF
D.	Manhole Frame and Cover	
	Standard Frame and Cover w/Inflow Protector	5 EA
	Water Tight Frame and Cover	1 EA
E.	Observation Port	1 EA
F	Sanitary Sewer Abandonment	
	8 Inch Dia. Pipe	400 LF
G	Manhole Demolition	4 EA
H	Laterial Replacement	
	4" PVC Pipe	54 LF
J.	Cut and Cap Existing Sanitary Sewer Abandon In Place	6 EA
K.	Manhole Modification	2 EA
L.	Erosion Protection	750 LF
M.	Mobilization/Demobilization	Lump Sum

PROPOSED SANITARY SEWER MANHOLES

MH #	Northing	Easting	Elevation
MH 1	N 304040.1873	E 1402632.1920	EL.=965.12
MH 2	N 304044.1266	E 1402700.8732	EL.=965.49
MH 3	N 304004.5872	E 1402789.4959	EL.=968.21
MH 4	N 304014.0082	E 1402947.7278	EL.=971.99
MH5	N 304010.4014	E 1403096.5154	EL.=976.53
MH 6	N 304036.8606	E 1403460.7981	EL.=984.88
MH 11	N 303730.5707	E 1402758.5650	EL.=971.91
MH 11A	N 303771.3217	E 1402944.9791	EL.=976.02
MH 11B	N 303812.1916	E 1403036.9393	EL.=976.12
MH 11C	N 303860.7026	E 1403148.1581	EL.=978.87
MH 11D	N 303783.9847	E 1403181.9823	EL.=980.42

RAILROAD CROSSING -PIPELINE SPECIFICATIONS

	CARRIER PIPE	CASING PIPE
Pipe Material:	DUCTILE IRON	STEEL
Material Specifications & Grade:	ANSI A 21.5/CLASS 52	ASTM A-139, GRADE B
Min. Yield Strengh of Material (PSI):	42,000	35,000
Mill Test Pressure:	250 psi	929.7 psi
Inside Diameter:	12.46"	23.186"
Outside Diameter:	13.20"	24"
Wall Thickness:	0.37"	0.407"
Type of Seam:	N/A	WELDED
Laying Lengths:	20 FEET	20 FEET
Type of Joints:	PUSH ON/RESTRAINED	WELDED

Casing Pipe Calculations

Steel Pipe Properties (A-139, Grade B):		Soil Properties:		Loading:	
O.D. =	24 in	D_L =	1.5	LL = Cooper E-80 plus 1.5 impact @ 30' = 100 psf	
I.D. =	23.186 in	E' =	1080 psi		
t =	0.407 in	K =	0.096	P_{DL} = γ x H x (1 psi/144 psf) =	25 psi
E=	29000000 psi	Height Cover, H=	30 feet	P_{LL} = 200 psf x (1 psi/144 psf) =	0.69 psi
I =	0.00582 in^3/in	γ =	120 pcf	P_{TL} = P_{DL} + P_{LL} =	25.7 psi
Deflection:		$\Delta y/D = D_L \times K \times P_{TL}/(EI/R^3 + 0.061\ E')$ =		0.023 < Allowable deflection of 3%	0.03 OK
Through-Wall Bending:		σ_{bw} = 4E (Δy/D) (t/D) =		45,443 psi < Allowable Tensile Stress	60000 OK

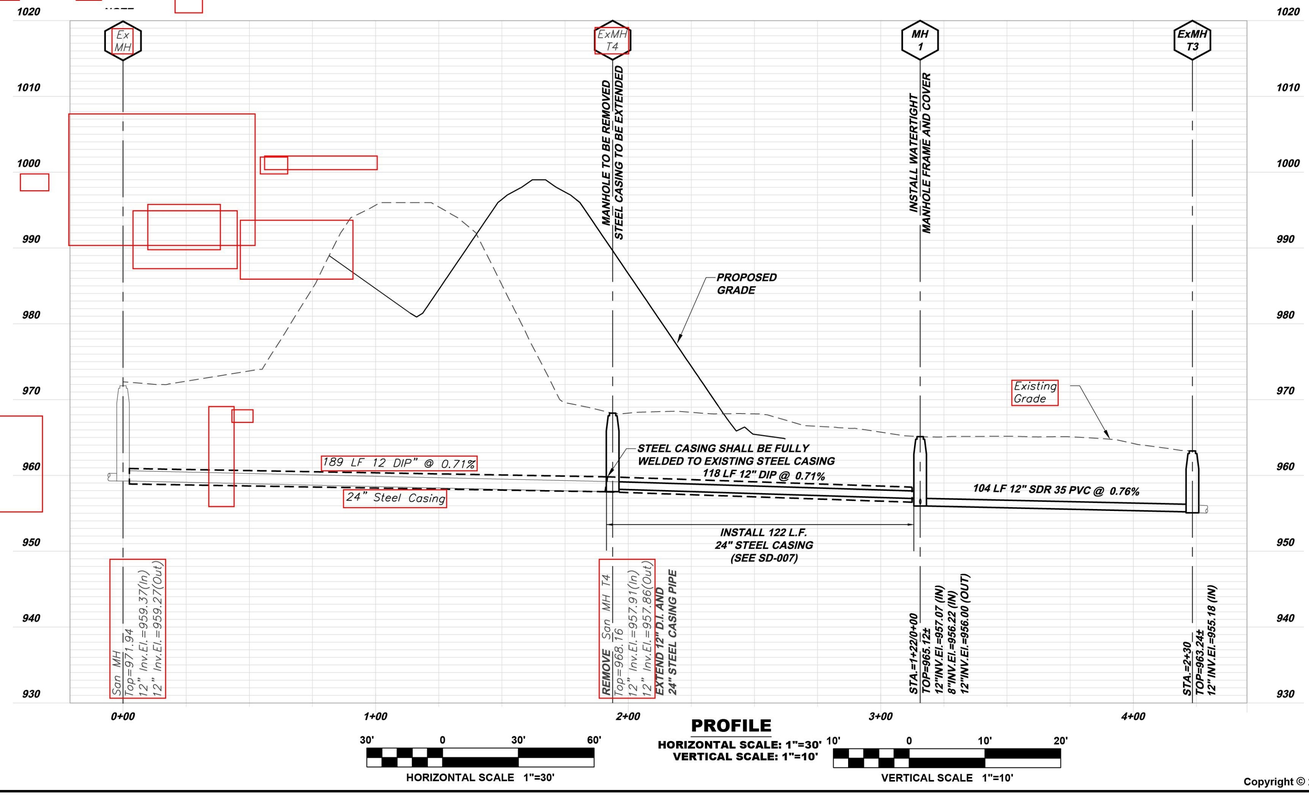

CERTIFIED CORRECT PLANS
Professional Engineer
Approved by Bureau of Technical Utility Services
PA PUBLIC UTILITY COMMISSION
ATTEST
Secretary

COMMONWEALTH OF PENNSYLVANIA
REGISTERED PROFESSIONAL
DAVID ALAN COLDREN, JR.
ENGINEER NO. PE 080628-E

Copyright © 2021 KLH Engineers, Inc., All Rights Reserved Worldwide

Revisions	Date
MH ALIGNMENT FOR RR	5/2021
R/R PROPERTY NOTE	6/2021
RELEASE FOR BID	8/23/21
REVISED MH 11C & MH 11D	8/30/21

5173 Campbells Run Road
Pittsburgh, PA 15205
Phone: 412.494.0510
Fax: 412.494.0426
info@klhengineers.com
KLH ENGINEERS, INC

ROSTRAVER TOWNSHIP SEWAGE AUTHORITY
WESTMORELAND COUNTY, PENNSYLVANIA

PENNDOT S.R. 0070, SECTION E10 - I-70/SR 51 INTERCHANGE PROJECT
PLAN & PROFILE

Scale:	As Shown
Date:	02/2021
Drawn By:	RBD
Checked By:	MJE
Approved By:	DAC

Order No. **288-94**
Drawing No. **C2**
Sheet No. **6 of 16**

Y:\288 Rostraver Township Sewage Authority\288-94 PennDOT SR 51 - I-70 Project\Dwgs\C288-94-002.dwg <C2> - Jan 21 2022 11:31:16 am PLOTTED BY: BDudley

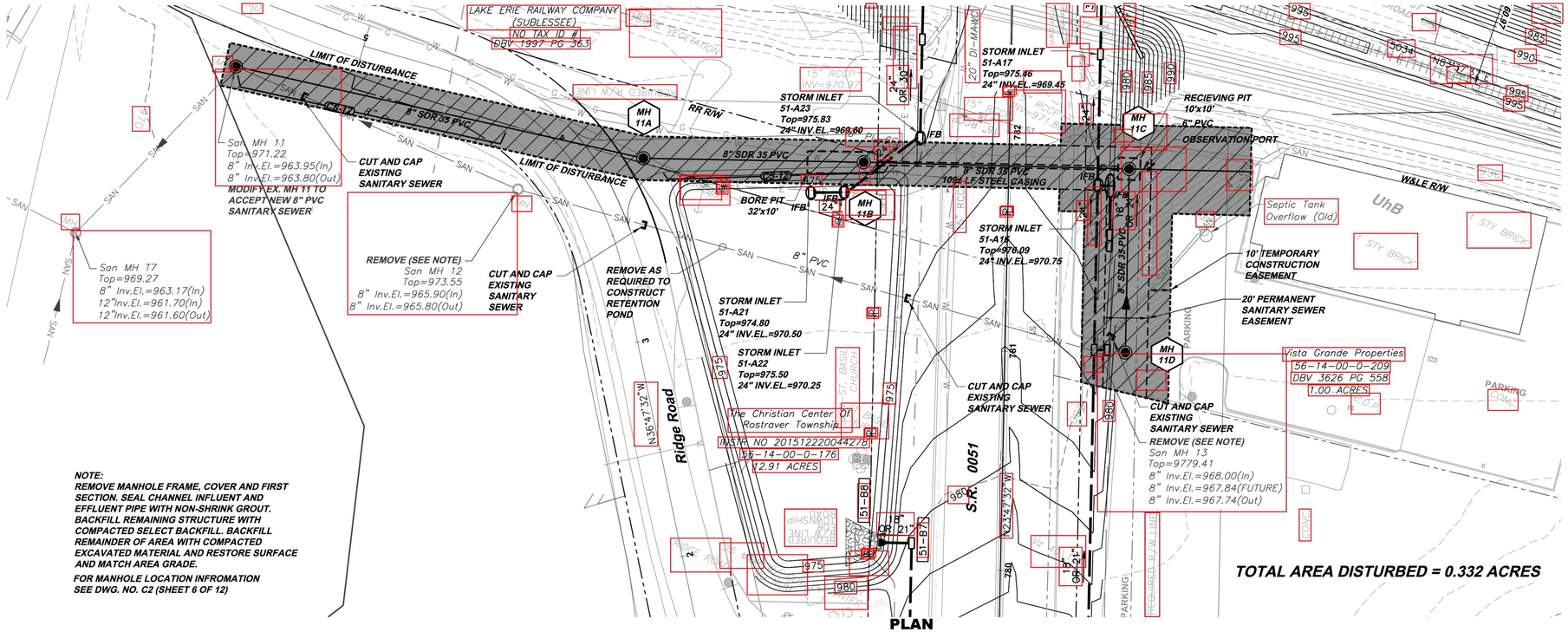

PLAN
SCALE: 1"=30'

NOTE:
REMOVE MANHOLE FRAME, COVER AND FIRST SECTION. SEAL CHANNEL INFLUENT AND EFFLUENT PIPE WITH NON-SHRINK GROUT. BACKFILL REMAINING STRUCTURE WITH COMPACTED SELECT BACKFILL. BACKFILL REMAINDER OF AREA WITH COMPACTED EXCAVATED MATERIAL AND RESTORE SURFACE AND MATCH AREA GRADE.

FOR MANHOLE LOCATION INFROMATION SEE DWG. NO. C2 (SHEET 6 OF 12)

NOTE
QUANTITIES FOR THIS SHEET SHOWN ON SHEET NO. 6

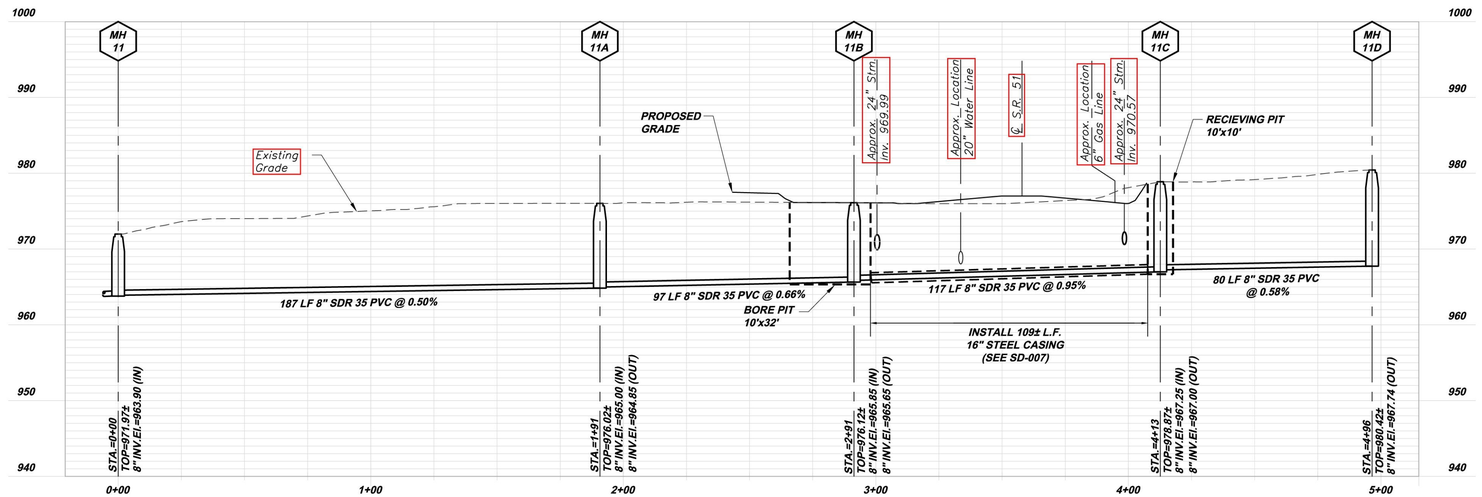

PROFILE
HORIZONTAL SCALE: 1"=30'
VERTICAL SCALE: 1"=10'

30' 0 30' 60' — HORIZONTAL SCALE 1"=30'

10' 0 10' 20' — VERTICAL SCALE 1"=10'

CERTIFIED CORRECT PLANS
Daniel R. Niftosh
Professional Engineer
Approved by Bureau of Technical Utility Services
PA PUBLIC UTILITY COMMISSION
ATTEST
Secretary

COMMONWEALTH OF PENNSYLVANIA
REGISTERED PROFESSIONAL
DAVID ALAN COLDREN, JR.
ENGINEER NO. PE 061922-E

Copyright © 2021 KLH Engineers, Inc., All Rights Reserved Worldwide

Revisions	Date
MH ALIGNMENT FOR RR	5/2021
R/R PROPERTY NOTE	6/2021
RELEASE FOR BID	8/23/21
REVISED MH 11C & MH 11D	8/30/21

5173 Campbells Run Road
Pittsburgh, PA 15205
Phone: 412.494.0510
Fax: 412.494.0426
info@klhengineers.com
KLH ENGINEERS, INC

ROSTRAVER TOWNSHIP SEWAGE AUTHORITY
WESTMORELAND COUNTY, PENNSYLVANIA

PENNDOT S.R. 0070, SECTION E10 - I-70/SR 51 INTERCHANGE PROJECT
PLAN & PROFILE

Scale:	As Shown
Date:	02/2021
Drawn By:	RBD
Checked By:	MJE
Approved By:	DAC

Order No. **288-94**
Drawing No. **C3**
Sheet No. **7 of 16**

Y:\288 Rostraver Township Sewage Authority\288-94 PennDOT SR 51 - I-70 Project\Dwgs\C288-94-003.dwg <C3> - Jan 14 2022 03:02:27 pm PLOTTED BY: BDudley

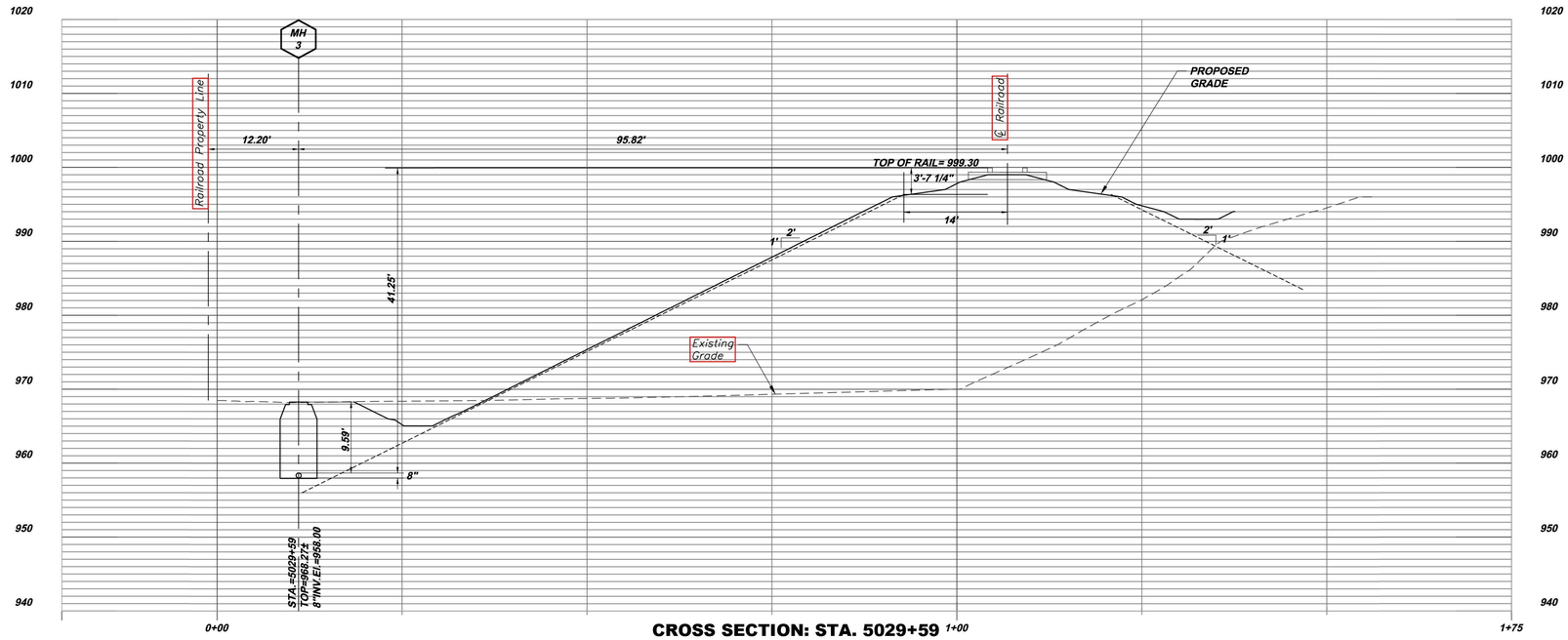

CROSS SECTION: STA. 5029+59

HORIZONTAL SCALE: 1"=10'
VERTICAL SCALE: 1"=10'

10' 0 10' 20'

SCALE 1"=10'

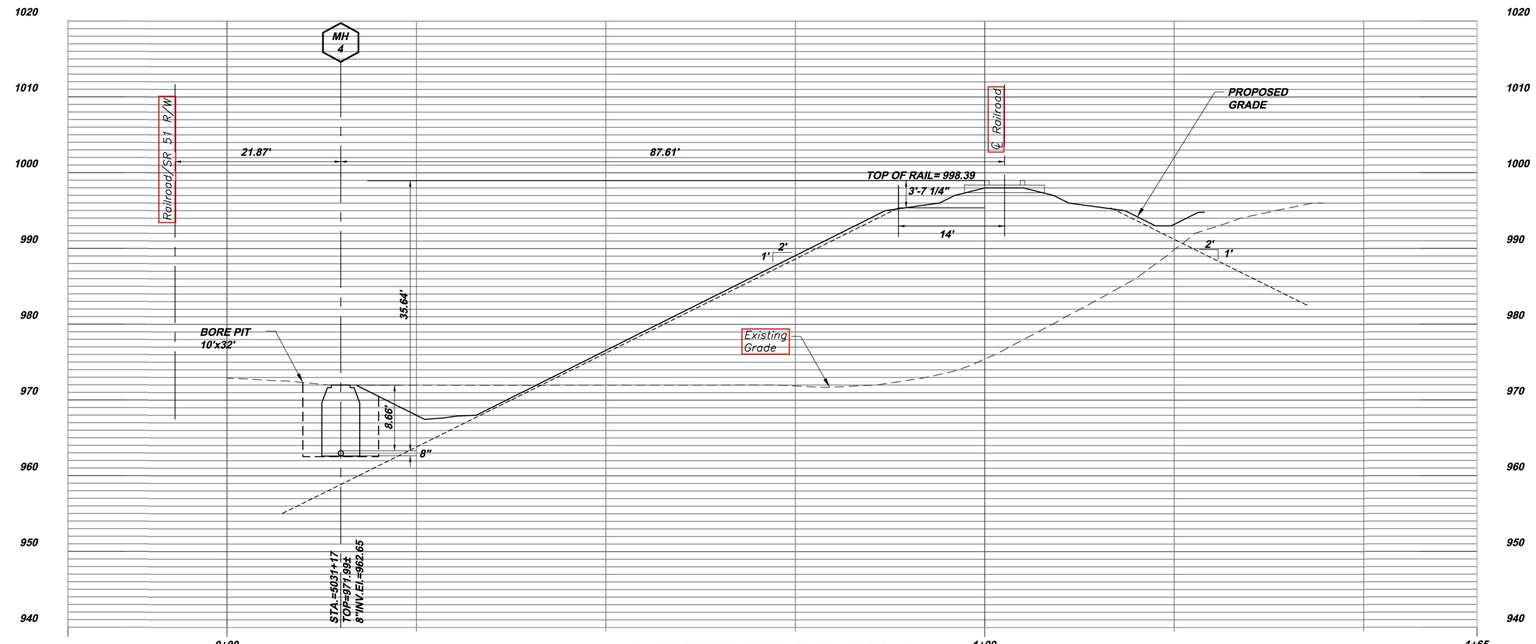

CROSS SECTION: STA. 5031+17

HORIZONTAL SCALE: 1"=10'
VERTICAL SCALE: 1"=10'

10' 0 10' 20'

SCALE 1"=10'

CERTIFIED CORRECT PLANS
David R. Hill
Professional Engineer
Approved by Bureau of Technical Utility Services
PA PUBLIC UTILITY COMMISSION
ATTEST
Secretary

COMMONWEALTH OF PENNSYLVANIA
REGISTERED PROFESSIONAL
DAVID ALAN COLDREN, JR.
ENGINEER NO. PE 060928-E

Copyright © 2021 KLH Engineers, Inc., All Rights Reserved Worldwide

Revisions	Date
MH ALIGNMENT FOR RR	5/2021
RR PROPERTY NOTE	6/2021
RELEASE FOR BID	8/23/21
REVISED MH 11C & MH 11D	8/30/21

5173 Campbells Run Road
Pittsburgh, PA 15205
Phone: 412.494.0510
Fax: 412.494.0426
info@klhengineers.com

KLH ENGINEERS, INC

ROSTRAVER TOWNSHIP SEWAGE AUTHORITY
WESTMORELAND COUNTY, PENNSYLVANIA
PENNDOT S.R. 0070, SECTION E10 - I-70/SR 51 INTERCHANGE PROJECT
CROSS SECTIONS

Scale:	As Shown
Date:	02/2021
Drawn By:	
Checked By:	
Approved By:	

Order No. 288-94

Drawing No. RR1

Sheet No. 8 of 16

Y:\288 Rostraver Township Sewage Authority\288-94 PennDOT SR 51 - I-70 Project\Dwgs\Xref\C288-94_02-2021.dwg <RR1> - Jan 13 2022 09:49:54 am PLOTTED BY: BDudley

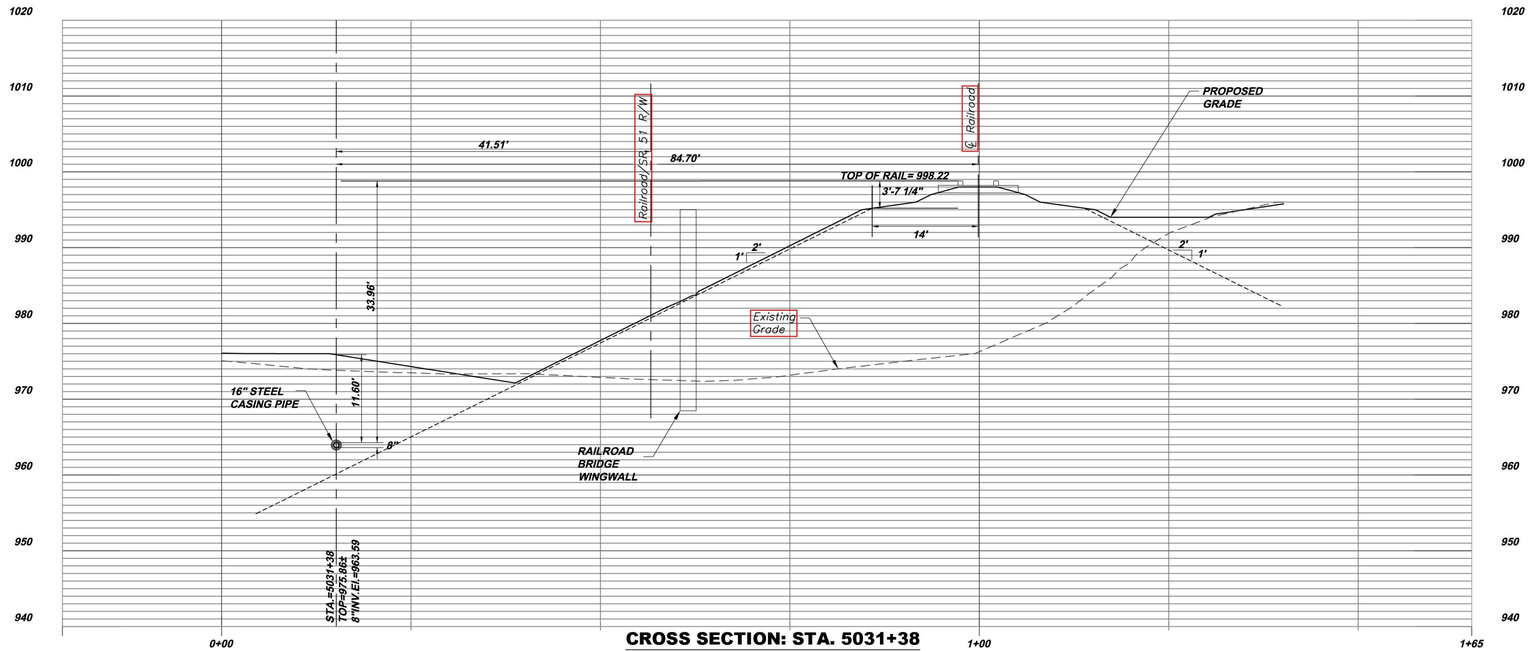

CROSS SECTION: STA. 5031+38

HORIZONTAL SCALE: 1"=10'
VERTICAL SCALE: 1"=10'

10' 0 10' 20'
SCALE 1"=10'

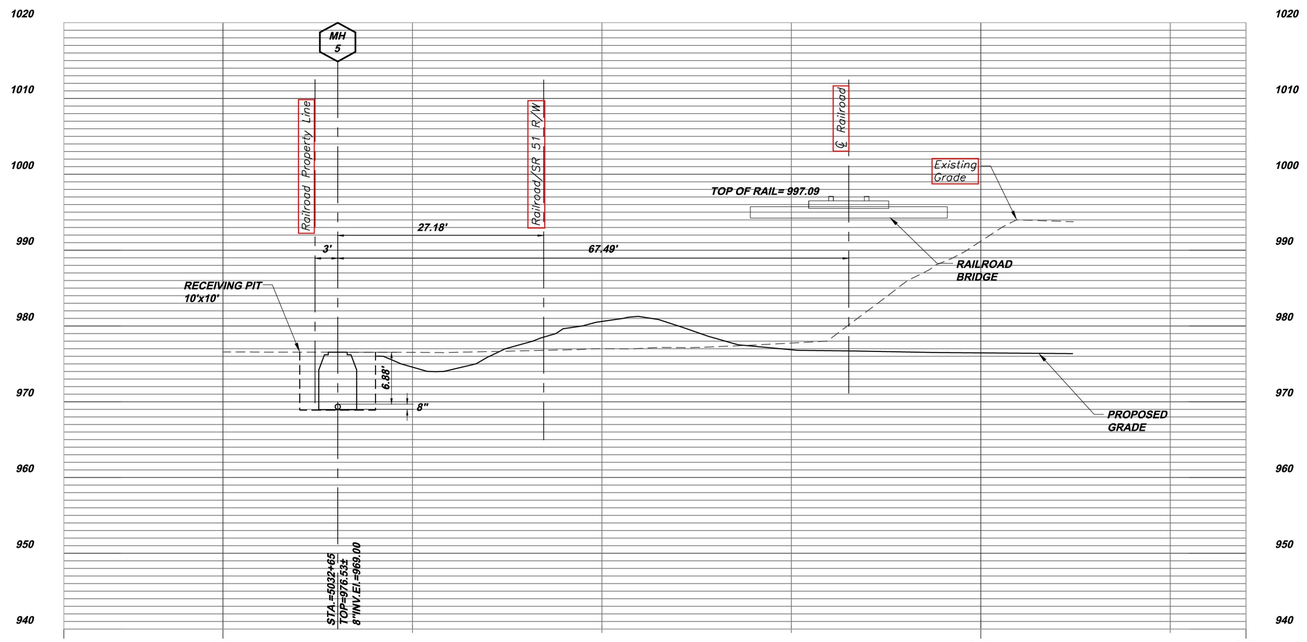

CROSS SECTION: STA. 5032+65

HORIZONTAL SCALE: 1"=10'
VERTICAL SCALE: 1"=10'

10' 0 10' 20'
SCALE 1"=10'

CERTIFIED CORRECT PLANS
Daniel R. Hellrich
Professional Engineer
Approved by Bureau of Technical Utility Services
PA PUBLIC UTILITY COMMISSION
ATTEST Rosemary Chiavetta
Secretary

COMMONWEALTH OF PENNSYLVANIA
REGISTERED PROFESSIONAL
DAVID ALAN COLDREN, JR.
ENGINEER NO. PE 060629-E

Copyright © 2021 KLH Engineers, Inc., All Rights Reserved Worldwide

Revisions	
Date	
5/2021	MH ALIGNMENT FOR RR
6/2021	R/R PROPERTY NOTE
8/23/21	RELEASE FOR BID
8/30/21	REVISED MH 11C & MH 11D

KLH ENGINEERS, INC
5173 Campbells Run Road
Pittsburgh, PA 15205
Phone: 412.494.0510
Fax: 412.494.0426
info@klhengineers.com

ROSTRAVER TOWNSHIP SEWAGE AUTHORITY
WESTMORELAND COUNTY, PENNSYLVANIA

PENNDOT S.R. 0070, SECTION E10 - I-70/SR 51 INTERCHANGE PROJECT
CROSS SECTIONS

Scale:	As Shown
Date:	02/2021
Drawn By:	
Checked By:	
Approved By:	

Order No. 288-94
Drawing No. RR2
Sheet No. 9 of 16

Y:\288 Rostraver Township Sewage Authority\288-94 PennDOT SR 51 - I-70 Project\Dwgs\Xref\C288-94_02-2021.dwg <RR2> - Jan 13 2022 09:52:29 am PLOTTED BY: BDudley

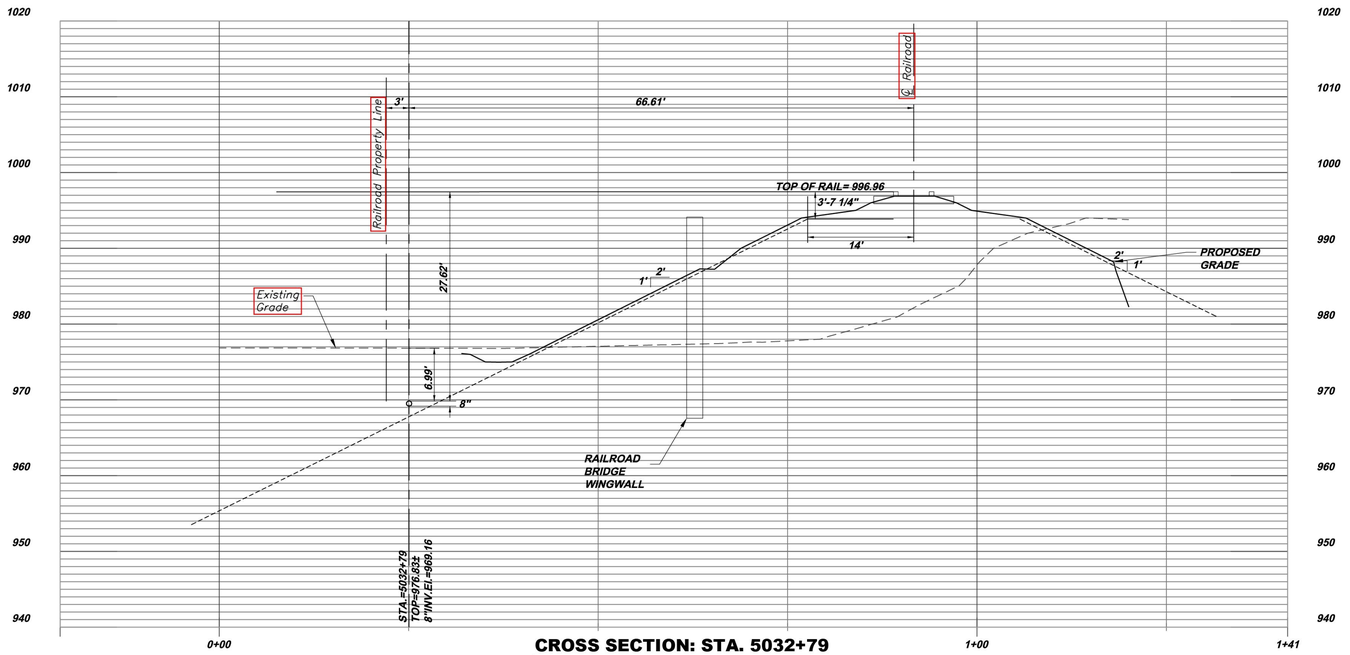

CROSS SECTION: STA. 5032+79

HORIZONTAL SCALE: 1"=10'
VERTICAL SCALE: 1"=10'

10' 0 10' 20'

SCALE 1"=10'

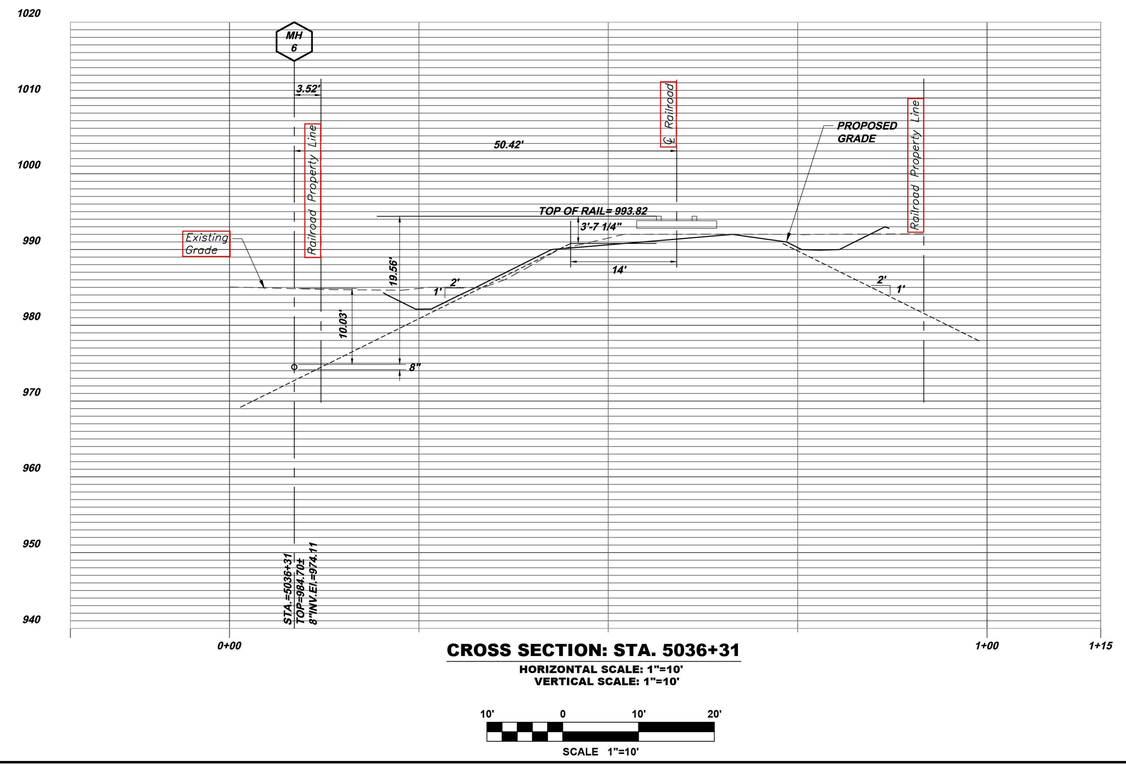

CROSS SECTION: STA. 5036+31

HORIZONTAL SCALE: 1"=10'
VERTICAL SCALE: 1"=10'

10' 0 10' 20'

SCALE 1"=10'

CERTIFIED CORRECT PLANS
David A. Coldren
Professional Engineer
Approved by Bureau of Technical Utility Services
PA PUBLIC UTILITY COMMISSION
ATTEST
Secretary

COMMONWEALTH OF PENNSYLVANIA
REGISTERED PROFESSIONAL
DAVID ALAN COLDREN, JR.
ENGINEER
NO. PE 080528-E

Copyright © 2021 KLH Engineers, Inc., All Rights Reserved Worldwide

Revisions		
	MH ALIGNMENT FOR RR	5/2021
	R/R PROPERTY NOTE	6/2021
	RELEASE FOR BID	8/23/21
	REVISED MH 11C & MH 11D	8/30/21

5173 Campbells Run Road
Pittsburgh, PA 15205
Phone: 412.494.0510
Fax: 412.494.0426
info@klhengineers.com

KLH ENGINEERS, INC

ROSTRAVER TOWNSHIP SEWAGE AUTHORITY
WESTMORELAND COUNTY, PENNSYLVANIA

PENNDOT S.R. 0070, SECTION E10 - I-70/SR 51 INTERCHANGE PROJECT
CROSS SECTIONS

Scale:	As Shown
Date:	02/2021
Drawn By:	
Checked By:	
Approved By:	

Order No. 288-94

Drawing No. RR3

Sheet No. 10 of 16

Y:\288 Rostraver Township Sewage Authority\288-94 PennDOT SR 51 - I-70 Project\Dwgs\Xref\C288-94_02-2021.dwg (RR3) - Jan 13 2022 09:55:45 am PLOTTED BY: BDudley

Implementation of the Erosion Sediment Pollution Control Plan

The foregoing procedures and all requirements of the specifications are contractual obligations of the CONTRACTOR performing the actual construction work. Said requirements also apply to any and all subcontractors working on the project. This plan will be implemented throughout the course of construction.
The requirements relative to temporary control measures, early permanent restoration and minimizing work areas, are the most important factors affecting construction performance. In view of those circumstances, it is believed that this particular plan, on this particular project, will be implemented throughout the course of work.

Use of the Erosion Sediment Pollution Control Plan

As previously stated herein, the "Erosion and Sediment Pollution Control Plan" has been prepared in response to and in accordance with certain rules and regulations promulgated by the Pennsylvania Department of Environmental Protection. The handling of storm water, the topographic and geological features described, the types and classifications of soils, the staging of earthwork, the temporary and permanent control measures, and the requirements are to be used for the purpose of eliminating, minimizing, and/or controlling pollution of the streams and waterways from materials anticipated to be eroded from the earthwork to be disturbed as a result of construction of the work.

Project Description:

Item No. 9000-0017

The work under 9000-0017 includes the furnishing and installing of all equipment, material and labor for the construction/realignment of approximately 670 linear feet of PVC sanitary sewer and appurtenances, and all necessary restoration.

Item No. 9000-0018

The work under 9000-0018 includes the furnishing and installing of all equipment, material and labor for the construction of approximately 820 linear feet of PVC sanitary sewer and appurtenances, and all necessary restoration. This contract is being completed to extend sewer service to three (3) located along Route 981.

General Notes:

1. A copy of the approved drawings (stamped signed and dated by the reviewing agency) must be available at the project site at all times.

2. At least 7 days prior to starting any earth disturbance activities (including clear and grubbing), the owner and/or operator shall invite all contractors, and landowner, appropriate municipal officials, the E&S Plan preparer, the post construction storm water management plan preparer, and a representative from the Local Conservation District to an on-site preconstruction meeting.

3. At least 3 days prior to starting any Earth disturbance activities, or expanding into an area previously unmarked, the Pennsylvania One Call System Inc. shall be notified at 1-800-242-1776 for the location of existing underground utilities

4. All Earth disturbance activities shall proceed in accordance with the sequence provided on the plan drawings. Deviation from that sequence must be approved in writing from the Local Conservation District or by DEP prior to implementation.

5. At no time shall construction vehicles be allowed to enter areas outside the limit of disturbance boundaries shown on the plan maps. These areas must be clearly marked and fenced off before clearing and grubbing operations begin.

6. Immediately upon discovering unforeseen circumstances posing the potential for accelerated erosion and/or sediment pollution, the operator shall implement appropriate BMPs to minimize the potential for erosion and sediment pollution and notify the Local Conservation District and/or the regional office of DEP.

7. All off-site waste and borrow areas must have an E&S Plan approved by the Local Conservation District or DEP fully implemented prior to being activated.

8. The contractor is responsible for ensuring that any material brought on site is Clean Fill. Form FP-001 must be retained by the property owner for any fill material affected by a spill or release of a regulated substance but qualifying as Clean Fill due to analytical testing.

9. A log showing dates that E&S BMPs were inspected as well as any deficiencies found and the date they were corrected shall be maintained on the site and be made available to regulatory agency officials at the time of inspection.

10. Sediment tracked onto any public roadway or sidewalk shall be returned to the construction site by the end of each work day and disposed in the manner described in this plan. In no cause shall the sediment be washed, shoveled, or swept into any roadside ditch, storm sewer, or surface water.

11. All sediment removed from BMPs shall be disposed of in the manner described on the plan drawings.

12. Fill materials shall be free of frozen particles, brush, roots, sod, or other foreign or objectionable materials that would interfere with or prevent construction of satisfactory fills.

13. Frozen materials or soft, mucky, or highly compressible materials shall not be incorporated into fills.

14. Fill shall not be placed on saturated or frozen surfaces.

15. All graded areas shall be permanently stabilized immediately upon reaching finished grade. Cut slopes in competent bedrock and rock fills need not be vegetated.

16. If earth disturbance activities cease in any area or subarea of the project for more than four (4) days, the operator shall stabilize all disturbed areas. During non-germinating months, mulch or protective blanketing shall be applied as described in the plan. Areas not at finished grade, which will be reactivated within 1 year, shall be stabilized in accordance with the permanent stabilization specifications.

17. Permanent stabilization is defined as a minimum uniform, perennial 70 percent vegetative cover or other permanent non-vegetative cover with a density sufficient to resist accelerated erosion. Cut and fill slopes shall be capable of resisting failure due to slumping, sliding, or other movements.

General Notes (continued):

18. E&S BMPs must remain functional as such until all areas tributary to them are permanently stabilized or until they are replaced by another BMP approved by the Local Conservation District or DEP.

19. Upon completion of all Earth disturbance activities and permanent stabilization of all disturbed areas, the owner and/or operator shall contact the Local Conservation District for an inspection prior to removal/conversion of the E&S BMPs.

20. After final site stabilization has been achieved, temporary E&S BMPs must be removed or converted to permanent post construction storm water management BMPs. Areas disturbed during removal or conversion of the BMPs must be stabilized immediately. In order to ensure rapid revegetation of disturbed areas, such removal/conversions should be done only during the germinating season.

21. Upon completion of all Earth disturbance activities and permanent stabilization of all disturbed areas, the owner and/or operator shall contact the Local Conservation District to schedule a final inspection.

22. Failure to correctly install E&S BMPs, failure to prevent sediment-laden runoff from leaving the construction site, or failure to take immediate corrective action to resolve failure of E&S BMPs may result in administrative, civil, and/or criminal penalties being instituted by the Pennsylvania Department of Environmental Protection as defined in Section 602 of the Pennsylvania Clean Streams Law. The Clean Streams Law provides for up to $10,000 per day in civil penalties, up to $10,000 in summary criminal penalties, and up to $25,000 in misdemeanor criminal penalties for each violation.

23. Concrete wash water shall be handled in the manner described on the plan drawings. In no case shall it be allowed to enter any surface waters or groundwater system.

24. Underground utilities cutting through any active channel shall be immediately backfilled and the channel restored to its original cross-section and protective lining. Any base flow within the channel shall be conveyed past the work area in the manner described in this plan until such restoration is complete.

25. Erosion control blanketing shall be installed on all slopes 3H:1V or steeper within 50 feet of a surface water and on all other disturbed areas specified on the plan maps and/or detail sheets.

Sequencing and Staging of Construction:

General Sequencing Notes:

The intent of the sequence of construction is to ensure that adequate control measures are provided for the areas in which construction activities are occurring at all times. Under no circumstances will construction activities begin until the erosion control devices (BMP's) for the areas involved are installed.

1. The proposed sewer lines installed within the noted soils will be backfilled with the same excavated material removed from the trench once the sewer line is in place. Proposed sewer lines installed in roadways, parking areas, driveways and other traveled ways shall be back filled to the base of the roadway with compacted select and approved backfill material. There will be no change in the "USE" of the disturbed area of construction.

2. The disturbed area along the sewer line main trench lines shall be restored to preconstruction conditions. Therefore, in these areas, the proposed contours will be equal to the existing contours.

3. The "staging" areas for the construction project have yet to be determined. Once the bid is awarded, It is the Contractor's responsibility to find sites to store his materials. If the "staging" areas are not within the confines of our permitted project boundary, the Contractor must obtain permits and install BMPs as required by that permit.

4. A rock construction entrance shall be installed as shown on plans.

Sanitary Sewerline Installation:

STAGE 1 - INITIAL SITE PREPARATION

1. Delineate project boundary limits, disturbance limits and environmentally sensitive areas clearly marking all pertinent features in the field.
2. Mobilize equipment to site.
3. Install rock construction entrance(s) at locations shown on the construction drawings and in accordance with the specifications
4. Install compost filter socks at all locations illustrated on the construction drawings and in accordance with the following standard details:
   - Typical side slope sewerline installation detail (no benching)
   - Typical side slope sewerline installation detail (with benching)
   - Typical upslope sewerline installation detail

   Placement of compost filter socks may not be limited to these areas. Compost filter socks and/or filter fabric fencing may be used in combination with seeding / mulching to stabilize areas disturbed by unforeseen construction.
5. Construct any additional perimeter BMPs as needed below construction areas.

STAGE 2 - UTILITY LINE TRENCHING

6. Upon completion of Stage 1 of the construction sequence, and after BMPs are installed and functioning properly, any necessary clearing and grubbing of the proposed areas of trenching will be completed.
7. Begin all earthwork and trenching activities. Earthwork shall consist of earthmoving necessary to facilitate the utility trenching. During earthwork activities, interim control measures shall be placed as to limit excessive erosion to work area (i.e. compost filter socks). All back filling must be completed by end of workday.
8. In areas of wetland and stream crossings, follow the Wetland and Stream Crossing Construction Sequence Notes located at the end of this sequence. (Reference Note 4 – Grubbing shall not take place within 50 feet of top-of-bank until all materials required to complete crossing are on-site and pipe is ready for installation.) Each resource shall be crossed in accordance with the methods identified in the resource impact table. When crossing wetland areas or areas with wet soils, wood mats shall be used per the typical wood mat for wetland crossing detail.
9. Spoil piles from trench operations shall be placed on the upslope side of the trench. Daily, after pipe is installed, the trench will be backfilled, compacted and leveled to match the preconstruction grades. Excavated material will not be removed from site.

STAGE 3 - FINAL RESTORATION

1. Upon completion of Stage 2 of the construction sequence, and immediately following any portion of the site being backfilled to final design grade, all disturbed areas shall be permanently seeded within 72 hours of completion of disturbance as per the permanent seeding specifications attached. This shall include applying seed, mulch, erosion control blankets and filter socks, etc. As specified herein or as required by site conditions.
2. Contractor's site superintendent will be responsible for inspection of all erosion and sedimentation pollution control measures weekly and after any runoff event. Corrective procedures will be taken immediately or within 24 hours after any inspection reveals the need for maintenance of existing measure or the placement of additional control measures to the site prior to any continued excavation activities.
3. All disturbed areas will be restored to pre-disturbed condition before removal of BMPs.

Upon completion of all utility trenching, ESTABLISHMENT OF A MINIMUM UNIFORM, 70% VEGETATIVE COVER OR OTHER PERMANENT NON-VEGETATIVE COVER WITH A DENSITY SUFFICIENT TO RESIST ACCELERATED EROSION, and an onsite investigation by Washington County Conservation District officials for appraisal, remove all temporary BMPs. Materials cleared from BMPs are required to be mixed with topsoil and reapplied then stabilized with seeding and mulch per the attached.

STREAM AND WETLAND CROSSING CONSTUCTION SEQUENCE NOTES:

1. All resource crossings are temporary and shall conform to chapter 105 permit requirements.
2. Temporary crossings shall be constructed with minimum disturbance and with materials that can be completely removed.
3. Construct all resource crossings in accordance with the typical details for the proposed method. Prevent the compaction of wetland soils.
4. Grubbing shall not take place within 50 feet of top-of-bank until all materials required to complete crossing are on-site and pipe is ready for installation.
5. Upslope runoff shall be diverted around the work area
6. All E&S controls shown on the plans and per the typical details shall be installed and functioning prior to construction of the utility line or road crossing.
7. Soil piles generated from crossing activities shall be set back a minimum of 10 feet from the resource. Provide compost filter socks between the piles and resource.
8. Trench plugs shall be installed on both sides of the resource in accordance with the detail. Provide concrete encasement where identified in accordance with the specifications.
9. Water accumulating within the work area shall be pumped to a pumped water filter bag prior to discharging into any receiving surface water.
10. Hazardous or pollutant material storage areas shall be located at least 100 feet back from the top of the resource.
11. No refueling of equipment shall be performed within 100 feet of a resource.
12. All excess excavated material shall be immediately removed from the resource crossing area.
13. Movement of vehicles or equipment across temporary road crossings shall be minimized.
14. All disturbed areas within 50 feet of top-of-bank shall be blanketed or matted within 24 hours of initial disturbance for minor streams or 48 hours of initial disturbance for major streams unless otherwise authorized. Appropriate streambank protection shall be provided within the channel.
15. Erosion controls shall be maintained at resource crossings until a point when crossing the resource is no longer needed. All areas disturbed during the removal of the E&S controls shall be stabilized in accordance with the revegetation specifications.

Sequence of Maintenance:

1. The Contractor's site superintendent will be responsible for the inspection of all erosion sediment pollution control measures (BMP's) weekly.

2. After each run-off event, The Contractor's site superintendent will responsible for the inspection of all BMP's by end of work day.

3. BMP's shall be protected and maintained at all times to completion of project.

4. BMP's shall be replaced or repaired within a 24 hour period upon discovery of deficiencies.

5. The Contractor shall remove all accumulated sediment and dispose of the material at a DEP approved waste site.

6. After any inspection reveals the need for maintenance of existing measures or the placement of additional control measures to the site, continued earth moving or site improvement activities shall cease until the appropriate BMP's have been repaired or replaced.

7. Rock filter outlets shall be installed to replace any compost filter socks found to have been insufficient (or failed) to handle the flow of surface water.

8. All inlet filter bags shall be inspected on a weekly basis and after each runoff event. Any silting shall be removed and hauled to an approved DEP waste site.

CERTIFIED CORRECT PLANS
Professional Engineer
Approved by Bureau of Technical Utility Services
PA PUBLIC UTILITY COMMISSION
ATTEST Secretary

DISTURBED AREA = 0.946 ACRE

COMMONWEALTH OF PENNSYLVANIA
REGISTERED PROFESSIONAL
DAVID ALAN COLDREN, JR.
ENGINEER NO. PE 060928-E

Copyright © 2021 KLH Engineers, Inc., All Rights Reserved Worldwide

5173 Campbells Run Road
Pittsburgh, PA 15205
Phone: 412.494.0674
Fax: 412.494.0676
info@klhengineers.com
KLH ENGINEERS, INC

Revisions	Date
MH ALIGNMENT FOR RR	5/2021
RJR PROPERTY NOTE	6/2021
RELEASE FOR BID	8/23/21
REVISED MH 11C & MH 11D	8/30/21

ROSTRAVER TOWNSHIP SEWAGE AUTHORITY
WESTMORELAND COUNTY, PENNSYLVANIA
PENNDOT S.R. 0070, SECTION E10 - I-70/SR 51 INTERCHANGE PROJECT
EROSION AND SEDIMENTATION POLLUTION CONTROL PLAN

Scale:	As Shown
Date:	02/2021
Drawn By:	RBD
Checked By:	MJE
Approved By:	DAC

Order No. 288-94
Drawing No. ES21
Sheet No. 11 of 16

Y:\288 Rostraver Township Sewage Authority\288-94 PennDOT SR 51 - I-70 Project\Dwgs\CS288-94-001.dwg <ES21> - Jan 13 2022 09:58:00 am PLOTTED BY: BDudley

Compost Filter Socks

Compost filter socks are a type of contained compost filter berm. They consist of a biodegradable or photodegradable mesh tube filled (typically using a pneumatic blower) with a coarse compost filter media that meets certain performance criteria (e.g. hydraulic flow rate, total solids removal efficiency, total suspended solids removal efficiency, turbidity reduction, nutrient removal efficiency, metals removal efficiency, and motor oil removal efficiency).

Filter socks are flexible and can be filled in place or filled and moved into position. They are especially useful on steep slopes. Heavy vegetation should be removed prior to installing the sock. Filter socks can be also be used on rocky slopes if sufficient preparation is made to ensure good contact of the sock with the underlying soil along its entire length. They may also be used on pavement as a perimeter control. Socks with diameters less than 12" should only be used for residential housing lots of ½ acre or less that are tributary to a sediment basin or sediment trap.

STANDARD CONSTRUCTION DETAIL #4-1
Compost Filter Sock

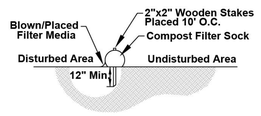

SECTION VIEW
N.T.S.

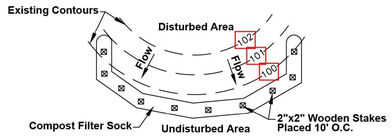

PLAN VIEW
N.T.S.

Sock fabric shall meet the following standards:

Sock Fabric Specifications	
Organic Matter Content	80%-100% (dry weight basis)
Organic Portion	Fibrous and Elongated
pH	5.5-8.0
Moisture Content	35%-55%
Particle Size	98% pass through 1" screen
Soluble Salt Concentration	5.0 dS Maximum

Compost Filter Socks shall be placed at existing level grade parallel to contour grade. Both ends of the sock shall be extended at least 8 feet up slope at 45 degrees to the main sock alignment. Maximum slope length above any sock can not exceed that shown on Table D.

Traffic shall not be permitted to cross filter socks.

Accumulated sediment shall be removed when it reaches ½ the above ground height of the sock and disposed in the manner described elsewhere in plan.

Socks shall be inspected weekly and after each runoff event. Damaged socks shall be repaired according to manufacturer's specifications or replaced within 24 hours of inspection.

Biodegradable filter socks shall be replaced after 6 months; photodegradable socks after 1 year. Polypropylene socks shall be replaced according to manufacturer's recommendations.

Upon stabilization of the area tributary to the sock, stakes shall be removed. The sock may be left in place and vegetated or removed. In the latter case, the mesh shall be cut open and the mulch spread as a soil supplement.

Turf Reinforced Mat For Slope Stabilization

General: Turf reinforced mat (TRM) will be used at locations indicated on the drawings.

Design Standards:

a. TRMs will be constructed in accordance to the installation details as shown below.

b. TRMs will be North American Green SC250 or P550 approved equal. As noted on Drawings

c. Staple Pattern will be in accordance to the TRM Staple detail shown and the manufacturer's recommendations.

Maintenance:

TRM's shall be inspected weekly and after every runoff event until uniform 70% vegetative coverage is achieved through the term of the contract and maintenance period. Areas damaged shall be reseeded as necessary and the TRM replaced and restapled.

Installation:

1. Seed and soil amendments shall be applied according to the rates in the plan drawings prior to installing the blanket.
2. Begin at the top of the slope or channel by anchoring the blanket in a 6" deep x 6" wide trench. Backfill and compact the trench after stapling. Provide anchor trench at toe of slope in similar fashion as at top of slope.
3. Slope surface shall be free of rocks, clods, sticks, and grass.
4. Pull the blanket down or horizontally across the slope. Blanket shall have good continuous contact with underlying soil throughout entire length. Lay blanket loosely and stake or staple to maintain direct contact with soil. Do not stretch blanket.
5. The edges of the parallel blankets shall have a 2" overlap and will be stapled or when blankets must be spliced down the slope, ends shall be overlapped shingle style with approximately 4" overlap. Staple through overlapped area, according to manufacturer's recommendations
6. Attach blanket to slope using the Dot System shown below. In loose soil conditions, the use of staples or stakes greater than 6" in length may be necessary to properly anchor the blankets.
7. Blanketed areas shall be inspected weekly and after each runoff event until the perennial vegetation is established to a minimum uniform 70% coverage throughout the blanketed area. Damaged or displaced blankets shall be restored or replaced within 5 calendar days.

Erosion Control Blanket Installation

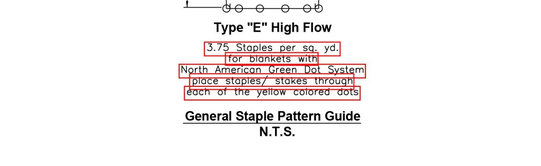

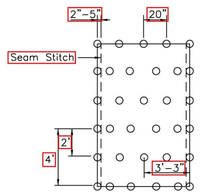

Type "E" High Flow

3.75 Staples per sq. yd. for blankets with North American Green Dot System place staples/ stakes through each of the yellow colored dots

General Staple Pattern Guide
N.T.S.

Utility Line Trench Excavation Procedure

General: Exposed trench excavations have high potential for accelerated erosion and sediment pollution. Since these excavations are usually located at lower elevations along or across earth disturbance sites, open trenches serve to concentrate sediment laden runoff and convey it to site boundaries or waterways. The most important erosion and sediment pollution control consideration for trench construction is the limiting and specific scheduling of work activities.

Construction Requirements:

a. Limit advance clearing and grubbing operations to a distance equal to two times the length of pipe installation that can be completed in one day.

b. Work crews and equipment for trenching, placement of pipe, plug construction and backfilling will be self contained and separate from clearing and grubbing and site restoration and stabilization operations.

c. Limit daily trench excavation to the length of pipe placement, plug installation and backfilling that can be completed the same day.

d. Trench plugs shall be installed at the entrance and exit of all sanitary sewer pipe that crosses through a wetland.

e. Water which accumulates in the open trench will be completely removed by pumping as shown by the PUMPED DISCHARGE SEDIMENT TRAP DETAIL before pipe placement and/or backfilling begins.

f. On the day following pipe placement and trench backfilling, the disturbed area will be graded to final contours and appropriate temporary erosion and sediment pollution control measures/facilities will be installed. Seeding and mulching of all disturbed areas will be done at the end of each week.

Exceptions:

In certain cases trenches cannot be backfilled until the pipe is hydrostatically tested, or anchors and other permanent features are installed. In these cases, ALL of the requirements listed under CONSTRUCTION REQUIREMENTS will remain in effect with the following exceptions:

(1) Daily backfilling of the trench may be delayed for six (6) days. All pressure testing and the complete backfilling of the open trench must be completed by the seventh (7) working day.

(2) If daily backfilling is delayed, the disturbed area will be graded to final contours, appropriate temporary erosion and sediment control measures/ facilities will be installed, and the areas seeded and mulched within the next two (2) calendar days.

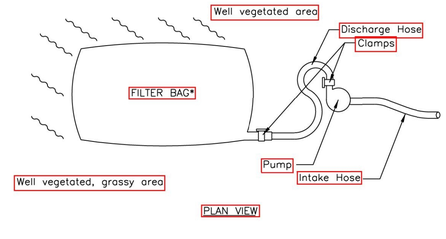

PLAN VIEW

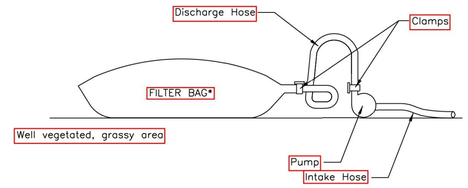

ELEVATION VIEW

Pumped Discharge Sediment Trap Detail
N.T.S.

FILTER FABRIC SPECIFICATIONS
Typical Properties

Weight	ASTM D3776	8.3 oz./yd.
Thickness	ASTM D1777	120 mils
Grab Tensile	ASTM D4632	240 lbs.
Grab Elongation at Break	ASTM D4632	50%
Puncture Resistance	ASTM D4833	115 lbs.
Trapezoidal Tear	ASTM D4533	100 lbs.
Mullen Burst	ASTM D3786	350 lbs.
Water Flow Rate	ASTM D4491	105 gpm/ft.
Permittivity	ASTM D4491	1.7 sec.$^{-1}$
UV Resistance	ASTM D4355	85% str. ret.
Bag Dimensions	15ft. x 13.25 ft.	

NOTES:

1. Filter bags shall be made from non-woven geotextile material sewn with high strength, double stitched "U" type seams. They shall be capable of trapping particles larger than 150 microns.
2. A suitable means of accessing the bag with machinery required for disposal purposes must be provided. Filter bags shall be replaced when they become 1/2 full. Spare bags shall be kept available for replacement of those that have failed or are filled. Sediment shall be disposed of at the contractor's dump site.
3. Bags shall be located in well-vegetated (grassy) area, and discharged onto stable, erosion resistant areas. Where this is not possible, a geotextile flow path shall be provided. Bags shall not be placed on slopes greater than 5%.
4. The pump discharge hose shall be inserted into the bags in the manner specified by the manufacturer and securely clamped.
5. The pumping rate shall be no greater than 750 gpm or 1/2 the maximum specified by the manufacturer, whichever is less. Pump intakes should be floating and screened.

Storm Inlet Protection

Storm sewer inlets should be protected from sediment pollution. Inlet protection should be maintained (i.e. kept in good repair and free from straw, grass clippings, sediment, construction debris, litter, snow, and ice) until all earthwork within the tributary drainage area has been completed and stabilized. To minimize potential clogging problems, consideration should be given to beehive grates for Type M inlets during construction. Inlet protection is not recommended for catch basins located near the edges of fill slopes. For these inlets, sediment removal BMPs should be provided at the discharge end of the system.

Silt fence and straw bale barriers are not effective when used in areas of concentrated flow such as is common at storm sewer inlets. Typically, silt fence and straw bales fail, allowing unfiltered water to enter the inlet. In those rare instances where the silt fence or straw bales do not fail, runoff usually either bypasses the inlet, causing erosion and/or capacity problems down gradient, or backs up to the point of creating flooding. This can create traffic hazards.

Inlet Filter Bag

Filter bags should be capable of trapping all particles not passing a No. 40 Sieve.

Wherever filter bags are used they should be installed according to the manufacturer's specifications. Typical installation details are provided on the drawings. Standard Construction Detail #'s 4-15 and 4-16 are recommended.

STANDARD CONSTRUCTION DETAIL #4-16
Filter Bag Inlet Protection - Type M Inlet

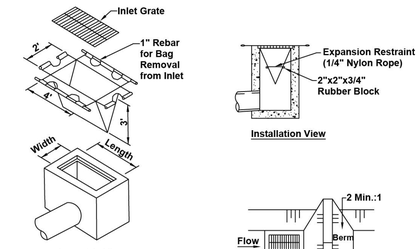

Isometric View

Installation View

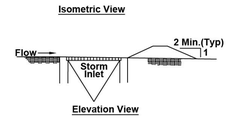

Elevation View

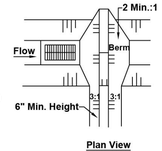

Plan View

STANDARD CONSTRUCTION DETAIL #4-15
Filter Bag Inlet Protection - Type C Inlet

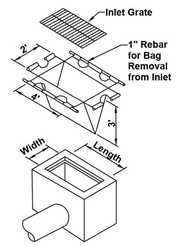

Isometric View

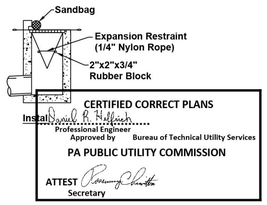

Installation View

CERTIFIED CORRECT PLANS
Professional Engineer
Approved by Bureau of Technical Utility Services
PA PUBLIC UTILITY COMMISSION
ATTEST
Secretary

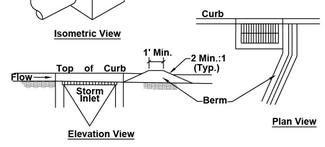

Elevation View

Plan View

COMMONWEALTH OF PENNSYLVANIA
REGISTERED PROFESSIONAL
DAVID ALAN COLDREN, JR.
ENGINEER NO. PE 061928-E

Maximum Drainage area = ½ acre.

Berms or curbs are required for all installations.

If required an earthen berm shall be maintained until the roadway is stoned. Road subbase berm shall be maintained until the roadway is paved.

Six inch minimum height asphalt berm shall be maintained until roadway surface receives final coat.

At a minimum, the fabric shall have a minimum Grab tensile Strength of 120 lbs., a minimum Burst Strength of 200 psi, and a minimum Trapezoidal Tear Strength of 50 lbs. Filter bags shall be capable of trapping all particles not passing a No. 40 Sieve.

Inlet filter bags shall be inspected on a weekly basis and after each runoff event. Bags shall be emptied and rinsed or replaced when ½ full or when flow capacity has been reduced so as to cause flooding bypassing of the inlet. Damaged or clogged bags shall be replaced. A supply shall be maintained on site for replacement of bags. All needed repairs shall be initiated immediately the inspection. Dispose accumulated sediment as well as used bags according to the plan notes.

DO NOT USE ON MAJOR PAVED ROADWAYS WHERE PONDING MAY CAUSE TRAFFIC HAZARDS.

Revisions	Date
MH ALIGNMENT FOR RR	5/2021
R/R PROPERTY NOTE	6/2021
RELEASE FOR BID	8/23/21
REVISED MH 11C & MH 11D	8/30/21

5173 Campbells Run Road
Pittsburgh, PA 15205
Phone: 412.494.0510
Fax: 412.494.0426
info@klhengineers.com
KLH ENGINEERS, INC

ROSTRAVER TOWNSHIP SEWAGE AUTHORITY
WESTMORELAND COUNTY, PENNSYLVANIA

PENNDOT S.R. 0070, SECTION E10 - I-70/SR 51 INTERCHANGE PROJECT
EROSION AND SEDIMENTATION POLLUTION CONTROL PLAN

Scale:	As Shown
Date:	02/2021
Drawn By:	RBD
Checked By:	MJE
Approved By:	DAC

Order No. 288-94
Drawing No. ES2
Sheet No. 12 of 16

Copyright © 2021 KLH Engineers, Inc., All Rights Reserved Worldwide

Y:\288 Rostraver Township Sewage Authority\288-94 PennDOT SR 51 - I-70 Project\Dwgs\ES288-94-002.dwg <ES2> - Jan 13 2022 10:00:37 am PLOTTED BY: BDudley

Stream Crossings

General: Erosion and sedimentation control measures and facilities for stream crossings require separate considerations for earth disturbances leading to and along the banks, and work undertaken within the channel. Work leading to and along stream banks typically requires only application of standard control measures and facilities such as diversion of upslope drainage, installation of interim stabilization, installation/construction of sediment removal facilities and so forth. For work within a stream channel, however, the sequence and timing of operations constitutes the primary consideration for preventing sediment releases. Crossing should only be undertaken during periods of low stream flow.

Staging:

a. Install erosion control and culvert to carry stream flow.

b. Construct sanitary sewer.

c. Remove culvert.

d. Restore stream bed and slopes.

Construction Procedures:

a. Normal stream flows in small streams (width from 1–10 feet) shall be conveyed over any excavation trench by a pipe or culvert. Trench excavation shall be undertaken from one side, or simultaneously from both sides, after installation of the normal flow diversion. The upstream and downstream ends of the diversion must be sealed to prevent flows from directly entering the trench. Use this method on streams wider than 10 feet where normal flow can be contained in a culvert and where trench excavation can be done from the top of the streambanks.

b. Trench excavation for utility line crossings should be undertaken from the top of banks whenever possible.

c. All excavated channel materials that will be subsequently used as backfill will be placed in a temporary stockpile located outside of the channel. These storage areas must be encircled with a barrier or sediment removal structure to prevent sediment laden runoff from reentering the channel. All excavated materials that will not be used on the site must be hauled to a disposal site located outside of the floodplain by end of work day.

d. Temporary access roads, crossings where repeated traffic is planned, and any other form of temporary fill or ballast located within the channel will be constructed with clean rock fill. For major causeways, fill materials will be stabilized at all locations subject to wash by stream flows.

e. Seepage into excavation trenches underneath or adjoining small stream diversions will be pumped to a facility for removal of sediment. This facility must be located outside of the channel.

f. Disturbed bank areas should be stabilized upon completion of the crossing by end of work day.

g. All work, including stabilization, will be performed within a 24 hour period, planned for periods of low stream flow, and will be completed in sufficient time to allow for the establishment of an erosion resistant vegetative cover on disturbed areas before the start of the dormant season.

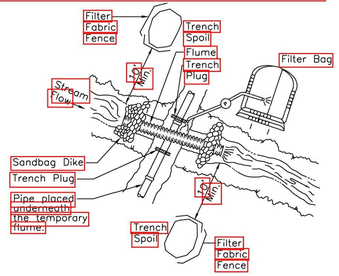

Stream Crossing Detail
N.T.S.

Drainage Ditch Crossings

General: Erosion and sedimentation control measures for construction within or across a drainage ditch, either wet or dry at the time of construction, requires considerations similar to stream crossings due to the potential for highly concentrated flows developing over a short time frame, which could cause accelerated erosion problems. The most important erosion and sedimentation control consideration for ditch construction are scheduling and timing of work activities.

Staging and Construction Procedures:

a. Flowing Ditch: Follow the staging and procedure for stream crossings.

b. Dry Ditch: Follow the staging and procedures for stream crossings with the exception that temporary diversion culvert construction is not necessary.

Ditch Stabilization:

a. Vegetation Lined Channel: Install jute matting or equivalent material to manufacturers specifications and seed area.



SECTION VIEW

NOTES:

Waterbars shall discharge to a stable area.

Waterbars shall be inspected weekly (daily on active roads) and after each runoff event. Damaged or eroded waterbars shall be restored to original dimensions within 24 hours of inspection.

Maintenance of waterbars shall be provided until roadway, skidtrail, or right-of-way has achieved permanent stabilization.

Waterbars on retired roadways, skidtrails, and right-of-ways shall be left in place after permanent stabilization has been achieved.

See PA DEP erosion control manual table 3.1 for waterbar spacing.

STANDARD CONSTRUCTION DETAIL WATERBAR
N.T.S.

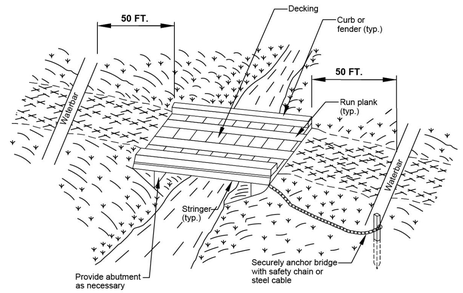

Note: Time of year restrictions do not apply to the construction or removal of a temporary access bridge unless there is a disturbance to the system channel.

TEMPORARY ACCESS BRIDGE
N.T.S.

Temporary Access Bridge Specifications:

1. Construct temporary bridge structure at or above the bank elevation to prevent impacts from floating materials and debris.
2. Place abutments parallel to, and on, stable banks.
3. Construct bridge to span entire channel unless otherwise indicated on approved plan.
4. Use stringers consisting of logs, sawn timber, prestressed concrete beams, metal beams, or other approved materials.
5. Select decking materials to provide sufficient strength to support the anticipated load. Place all decking member perpendicular to the stringers, butt tightly, and securely fasten. Decking materials must be butted tightly to prevent any soil material tracked onto the bridge from falling into the waterway below.
6. Securely fasten optional run planking for the length of the span. Provide a run plank for each track of the equipment wheels. Although run planks are optional, they may be necessary to properly distribute loads.
7. Install curbs the entire length of the outer sides of the deck to prevent sediment from entering the stream channel.
8. Anchor bridge securely at only one end using steel cable or chain. Anchoring at only one end will prevent channel obstruction in the event that floodwaters float the bridge. Acceptable anchors are large trees, large boulders, or driven steel posts. Anchor must be sufficient to prevent the bridge from floating downstream.
9. Areas distributed during bridge installation and/or removal must not be left unstabilized overnight unless the runoff is directed to an approved sediment control device.
10. After the temporary crossing is no longer needed, remove it within 14 calendar days. Protect stream banks during bridge removal and stabilize all disturbed areas with slope reinforcement mat. Accomplish removal of bridge and clean up of the area without construction equipment working in the waterway channel. Store all removed materials in an approved staging area.
11. Approaches to crossings are not to exceed a depth of 6 inches above original grade.
12. Bridges must be a single span from top of bank to top of bank and structurally stable.
13. Approach roads to temporary road crossings shall utilize original grades. However, clean rock material or gravel to a depth of six inches above original grade shall be utilized for approaches as necessary.
14. Temporary road crossings shall be kept open and functioning at all times by maintaining the crossings free of debris and other obstructions.
15. Access roads should not approach the stream channel directly down slope, but should traverse the slope obliquely to prevent high velocity road drainage flows from directly entering the stream channel. Road drainage shall include proper erosion and sedimentation control Best Management Practices.
16. Water Bars shall be installed on the access road of the temporary bridge 50 feet from each stream bank.

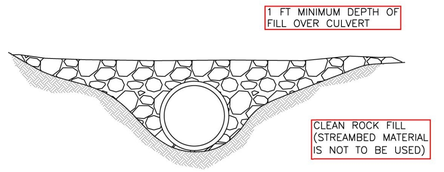

NOTES:

Provide 50' stabilized access to crossing on both sides of stream channel.

Pipes shall extend beyond the toe of the roadway.

Runoff from the roadway shall be diverted off the roadway and into a sediment removal bmp before it reaches the rock approach to the crossing.

MAINTENANCE

1. Temporary stream crossings shall be inspected on a daily basis.
2. Damaged crossings shall be repaired within 24 hours of the inspection and before any subsequent use.
3. Sediment deposits on the crossing or its approaches shall be removed within 24 hours of the inspection.
4. Culverts must provide a waterway area sufficient to adequately discharge normal flow of the watercourse or stream, and shall be of sufficient length to extend beyond the toe of the clean rock fill.
5. Culverts must be installed in such a manner that overtopping of the roadway will occur within the stream channel. This can be accomplished by providing a depressed roadway embankment
6. A culvert having as large as a diameter as possible must be provided to minimize placement of excessive fill and excavation of the stream banks. If the bank height prohibits a large diameter pipe culvert, the crossing should consist of a bridge or series of culverts. The minimum size diameter culvert to be used is 12 inches.

AS SOON AS THE TEMPORARY CROSSING IS NO LONGER NEEDED, IT SHALL BE REMOVED. ALL MATERIALS SHALL BE DISPOSED OF PROPERLY AND DISTURBED AREAS STABILIZED.

STANDARD CONSTRUCTION DETAIL
TEMPORARY STREAM CROSSING
N.T.S.

Rock Filter Outlet

Rock filter outlets may be used to address problems of concentrated flows to sediment barriers. Wherever a sediment barrier has failed due to an unanticipated concentrated flow, a rock filter outlet should be installed unless that concentrated flow can be otherwise directed away from the barrier.

STANDARD CONSTRUCTION DETAIL #4-6
Rock Filter Outlet

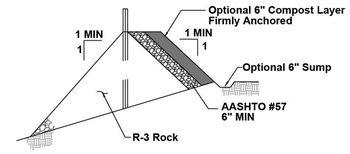

OUTLET CROSS-SECTION

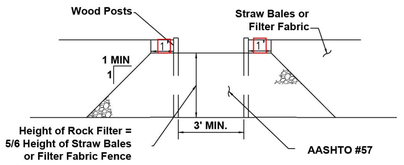

UP-SLOPE FACE

A Rock Filter Outlet shall be installed where failure of a Straw Bale Barrier or Filter Fabric Fence has occurred due to concentrated flow.

Sediment must be removed when accumulations reach 1/3 the height of the outlet.

In special protection watersheds (HQ or EV), or where additional water filtering is desired, a 6" layer of compost should be added and anchored on top of the AASHTO #57 stone. A 6-inch deep sump may be installed immediately upslope of the rock filter outlet to provide sediment removal capacity.

Rock Filter Outlet may not be used in lieu of channel linings, protective linings or other BMP device as shown.

Rock Filter Outlet should be inspected weekly and after each runoff event.

Clogged filter stone should be replaced.

Needed repairs should be initiated immediately after inspection.

Trench Plugs

Projects with utility lines involving piping alignments along a stream corridor, stream, wetland or riparian zone require trench plugs. Trench plugs are also required at points of infiltration of ground water. Maintaining the natural mechanisms for ground water movement is very important for sustaining base flow to receiving streams and for preserving riparian vegetation. In order to avoid creating a preferential pathway for groundwater flow (i.e. "French Drain" effect within the utility trench backfill – usually permeable aggregate), the use of the trench plugs is warranted. The trench plugs will block the flow of ground water along the path of the utility pipe/trench and maintain the natural groundwater path. Maximum spacing between trench plugs is 1000 feet.

STANDARD CONSTRUCTION DETAIL #13-4
Trench Plug Installation

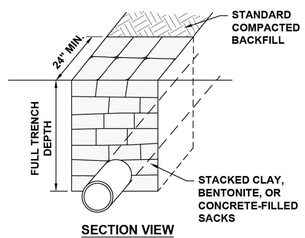

SECTION VIEW

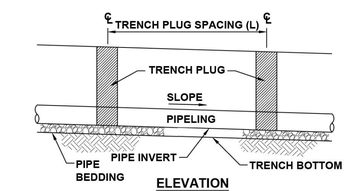

ELEVATION

TABLE 13.1
Required Maximum Spacing and Materials for Trench Plugs

Trench Slope (%)	Spacing L (FT)	Plug Material
< 5 (%)	1,000	*Clay, Bentonite, or Concrete Filled Sacks
5 - 15	500	*Clay, Bentonite, or Concrete Filled Sacks
15 - 25	300	*Clay, Bentonite, or Concrete Filled Sacks
25 - 30	200	*Clay, Bentonite, or Concrete Filled Sacks
35 - 100	100	*Clay, Bentonite, or Concrete Filled Sacks
> 100	50	Cement Filled Bangs (Wetted) or Mortared Stone

Impervious trench plugs are required for all stream, river, wetland, or other crossings regardless of trench slope.

Impervious trench plugs are also required at points of infiltration of ground wa

CERTIFIED CORRECT PLANS
David A. Coldren.....
Professional Engineer
Approved by
Bureau of Technical Utility Services
PA PUBLIC UTILITY COMMISSION
ATTEST
Secretary

Site Housekeeping and Materials Management

Waste Management

Building Materials and other construction site wastes must be properly managed and disposed of to reduce potential for pollution to surface and ground waters. Proper trash disposal, recycling of materials, proper materials handling, and spill prevention and clean up reduce the potential for construction site wastes to be mobilized by storm water runoff and conveyed to surface waters.

Under no circumstances should erosion control BMPs be used for temporary storage of demolition materials or construction wastes.

Wherever heavy equipment will be used during construction of the cuts and fills or proposed buildings, a Pollution Prevention Contingency (PPC) Plan shall be available on site.

All applicable federal, state, and local laws and regulations should be followed in the use, handling, and disposal of potentially hazardous materials.

Concrete Washout

For any project on which concrete will be poured or otherwise formed on site, a washout facility must be provided for the cleaning of chutes, mixers, and hoppers of the delivery vehicles. Under no circumstances should was water from these vehicles be allowed to enter any surface waters. Make sure that proper signage is provided to drivers so that they are aware of the presence of washout facilities.

Washout facilities should not be placed within 50 feet of storm drains, open ditches, or surface waters. They should be in a convenient location for the trucks, preferably near the place where concrete is being poured, but far enough from other vehicular traffic to minimize the potential for accidental damage or spills. Wherever possible, they should be located on slopes not exceeding a 2% grade. Additional information on washouts may be obtained from: http://cfpub.epa.gov/npdes/stormwater/menuofbmps/index.cfm?action=browse&Rbutton=detail&bmp=117.

Compost Sock Washout

A suitable impervious geomembrane should be placed at the location of the washout. Compost socks should be staked in the manner recommended by the manufacturer around perimeter of the geomembrane so as to form a ring with the ends of the sock located at the upslope corner. Care must be taken to ensure continuous contact of the sock with the geomembrane at al locations. Where necessary, socks may be stacked and staked so as to form a triangular cross-section.

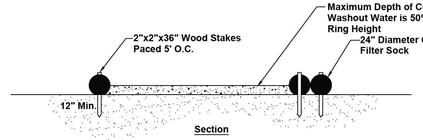

Section

Notes:
1. Install on flat grade for optimum performance.
2. 18" Diameter filter sock may be stacked onto double 24" diameter socks in pyramidal configuration for added height.

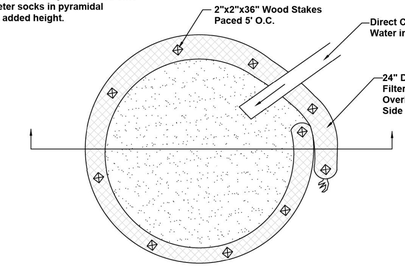

Plan

Prefabricated Washout Containers

Care should be taken to ensure that the containers are intended by the manufacturer for use as concrete washout BMPs, that they are watertight, and appropriately sized. Accumulated materials should be properly disposed of (preferably recycled) when they reach cleanout level.

Self-installed Washout

These should be excavated below grade to prevent runoff and the potential for breaching. They should be sized to handle solids, wash water, and rainfall. A good rule of thumb is that 7 gallons of wash water are required to wash one truck chute and 50 gallons for the hopper of a concrete pump truck.

For larger sites, a below-grade washout should be a minimum of 10 feet wide and provide at least 12 inches of freeboard above the liquid and solid waste anticipated between cleanout intervals. The pit should be lined with plastic sheeting of at least 10-mil thickness (with no holes or tears) to prevent leaching of liquids into the ground.

Note:

Sediment basins and sediment traps may not be used a concrete washout devices, since they discharge directly to surface waters. This discharge would have an adverse affect upon the receiving water. In addition, continued use of a basin or trap as a washout facility would significantly reduce the storage capacity of the basin or trap.

Maintenance

All concrete washout facilities should be inspected daily. Damaged or leaking washouts should be deactivated and repaired or replaced immediately.

Accumulated materials should be removed when they reach 75% capacity.

Plastic liners should be replaced with each cleaning of the washout facility.

All building materials and wastes must be removed from the site and recycled or disposed of in accordance with the Department's Solid Waste Management Regulations at 25 Pa. Code Chapter 260,§§260.1 et seq., 271.1, and 287.1 et. seq. No building materials or wastes or unused building materials shall be burned, buried, dumped, or discharged at the site.

All off-site waste and borrow areas must have an E&S Plan approved by the Local Conservation District or DEP fully implemented prior to being activated.

The contractor is responsible for ensuring that any material brought on site is Clean Fill. Form FP-001 must be retained by the property owner for any fill material affected by a spill or release of a regulated substance but qualifying as Clean Fill due to analytical testing.

COMMONWEALTH OF PENNSYLVANIA
REGISTERED PROFESSIONAL
DAVID ALAN COLDREN, JR.
ENGINEER
No. PE 060598-E

Copyright © 2021 KLH Engineers, Inc., All Rights Reserved Worldwide

Revisions		
Date		
5/2021	MH ALIGNMENT FOR RR	
6/2021	RR PROPERTY NOTE	
8/23/21	RELEASE FOR BID	
8/30/21	REVISED MH 11C & MH 11D	

5173 Campbells Run Road
Pittsburgh, PA 15205
Phone: 412.494.0505
Fax: 412.494.0026
info@klhengineers.com

KLH ENGINEERS, INC

ROSTRAVER TOWNSHIP SEWAGE AUTHORITY
WESTMORELAND COUNTY, PENNSYLVANIA

PENNDOT S.R. 0070, SECTION E10 - I-70/SR 51 INTERCHANGE PROJECT
EROSION AND SEDIMENTATION POLLUTION CONTROL PLAN

Scale:	As Shown
Date:	02/2021
Drawn By:	RBD
Checked By:	MJE
Approved By:	DAC

Order No. 288-94

Drawing No. ES3

Sheet No. 13 of 16

Y:\288 Rostraver Township Sewage Authority\288-94 PennDOT SR 51 - I-70 Project\Dwgs\ES\288-94-003.dwg <ES3> - Jan 13 2022 10:02:03 on PLOTTED BY: BDudley

Vegetation

General: The work area for this project is to be permanently seeded, unless occupied by structures or paving. All areas requiring interim or final stabilization must be addressed within 72 hours of completion of disturbance. Areas utilizing vegetative stabilization must be seeded/planted in sufficient time to germinate by October 15th of each year. Seeding will be accomplished through the use of hydroseeding techniques or conventional seeding and mulching at the rate of 3.0 tons/acre as recommended in the Penn State Agronomy Guide. If seeding cannot be completed within the ten day period due to weather conditions, the disturbed area shall be mulched with straw at the rate of 1,000 sq. ft. This straw shall be anchored with mulch netting according to the manufacturer's recommendations or other appropriate means. The Contractor must conform to PennDot Pub. 408 (Sections 804 and 805) for all seeding and mulching requirements.

Temporary seeding will be used to protect exposed land surfaces in which work will cease for more then four days. Temporary vegetation will provide short-term rapid cover until permanent vegetation or other protection can be established.

Seeding Specification Table

Formula	Species	% By Weight	Minimum % Purity	Minimum % Germin.	Max % Weed	Seeding Rate Lbs. per 1,000 SY	Seeding Dates
B	Perennial Ryegrass Mixture (Lolium perenne)[1]	20	98	90	0.15	4.0	
	Creeping Red Fescue or Chewings Fescue	30	98	85	0.15	6.0	Mar. 15 to Jun. 1
	Kentucky Bluegrass Mixture[2]	50	98	80	0.20	11.0	Aug. 1 to Oct. 15
						21.0 TOTAL	
C	Annual Ryegrass (Lolium multiflorum)	55	98	90	0.15	5.0	Mar. 1 to Oct. 15
						5.0 TOTAL	
E	Annual Ryegrass (Lolium multiflorum)	100	98	90	0.15	10.0	Mar. 15 to Oct. 15
						10.0 TOTAL	

1. A combination of improved certified varieties with no one variety exceeding 50% of the total Ryegrass component
2. A combination of improved certified varieties with no one variety exceeding 25% of the total Bluegrass component

Temporary Seeding Specifications:

The purpose of temporary cover is to provide short-term rapid cover for the control of runoff and erosion until vegetation or other stabilization material can be established. Temporary cover shall be applied on all sediment producing areas where the period of exposure will be more than four days.

The utility line construction is to be progressively backfilled by end of work day. If it is necessary to stockpile soil, temporary grass cover shall be established where soil stockpiles are to be exposed for a period greater than thirty (30) days. When the soil stockpile will be exposed for a period greater than two (2) days, but less than thirty (30) days, the stockpile shall be covered with mulch or protective erosion control fabric.

The site preparation and establishment of temporary cover shall be conducted according to the following guidelines:

a. Install needed surface water control measures.

b. Perform all cultural operations at right angles to the slope.

c. Apply ground limestone according to soil test or in the absence of a soil test at the rate of 6 tons per acre.

d. Apply uniformly recommended analysis fertilizer according to soil test or 10-20-20 at the rate of 1,000 lb per acre.

e. Work in lime and fertilizer to a depth of 4 in. using any suitable equipment.

f. Temporary cover seed mixture shall conform to Formula E of the seeding specification table.

g. Cover grass seed with 1/2 in. of soil with suitable equipment.

Permanent Seeding Specifications:

All areas will have permanent vegetation established. Areas identified as wetland shall be restored to pre-construction conditions within 10 days following acceptable installation of the crossing as previously stated. All other areas along the pipeline shall have permanent vegetation established within 2 days upon completion of the pipeline. Sediment control devises will be removed only when the final vegetative cover and permanent facilities are completed. Completed areas will be covered with a minimum 4 inches of topsoil.

After the topsoil has been properly distributed, lime in the form of raw ground limestone shall be applied in an amount to be determined from an analysis of the soil by a qualified soil sampling service; then one week after the time it has been spread, fertilizer shall be added. Fertilizer in the amount of 5-10-5, nitrogen, phosphorus and potash, respectively, shall be spread at the rate of 30 lb. per 1,000 sq. ft. after which mulch shall be added. The entire area shall then be properly tilled and handracked to a smooth, even grade. All stones shall be removed from the topsoil. The Contractor shall refer to the seeding specification table above and use Formula C for steep slopes and Formula B elsewhere. The area shall then be lightly brushed or racked to provide slight covering over the seed, after which, it shall be lightly rolled in two directions. In the absence of a soil test, fertilizer should be applied at a rate of 100 lb. of Nitrogen, 200 lb. of P2O5, and 200 lbs. K2O per acre (eg. 1,000 lbs. of 10-20-20 per acre).

Sowing may be done mechanically, by hand, or by an approved method of hydroseeding. In the latter case, alternate means of fertilizing combined with seeding will be permitted upon approval of methods by the OWNER'S representative. Mulching material shall be in accordance with the recommendations of a local recognized nurseryman approved by the OWNER'S representative. The vegetated areas shall be inspected weekly and after every run-off event. Areas will be reseeded as needed until uniform 70% perennial vegetative coverage is achieved. Maintenance may include repeated watering, mowing, and repair or replacement of the vegetation in areas that fail to show uniform growth of grass, or which are damaged in any way.

Permanently stabilized vegetation is defined as a uniform 70% vegetative cover of erosion resistant perennial species has been achieved. Also, it may be that the disturbed area is covered with an acceptable BMP which permanently minimizes accelerated erosion and sedimentation. Until such time as this standard is achieved, interim stabilization measures and temporary erosion and sediment control BMP's may not be removed.

Mulching:

The purpose of mulch is to reduce erosion, prevent surface compaction, crusting, conserve moisture and aid in establishing plant cover and control weeds. Mulch shall be applied on any area subject to erosion, or which has unfavorable conditions for plant establishment and growth. The practice may be used along or in conjunction with other structural and vegetative conservation practices, such as waterways, ponds, sedimentation traps, or critical planting area. On sediment producing areas where the period of exposure is less than two months, mulch materials shall be applied according to the following guidelines:

a. For areas subject to critical erosion, temporary erosion control devices such as furrows, diversions, etc., within or adjacent to area to be mulched shall be installed.

b. Straw or hay mulch shall be applied at the rate of 3 tons per acre. Chemically treated or salted straw or hay is not acceptable as mulch.

c. Straw or hay mulch shall be anchored by either peg or twine or mulch netting.

d. Mulched areas shall be checked within 24 hours after severe storms for damage until the desired purpose of the mulching is achieved. Damaged portions of the mulch or tie-down material shall be repaired , when discovered, by end of work day.

Type of Soil Disturbed by Construction

A general overview of the limitations on the soils involved for sanitary sewer construction project reveals that soils have limitations. Some important facts and significant limitations that need to be addressed on a soil by soil basis are:

Map Unit: ClB--Clarksburg silt loam, 3 to 8 percent slopes

Component: Clarksburg (88%)

The Clarksburg component makes up 88 percent of the map unit. Slopes are 3 to 8 percent. This component is on hillslopes on uplands. The parent material consists of fine-loamy colluvium derived from limestone, sandstone, and shale. Depth to a root restrictive layer, fragipan, is 24 to 37 inches. The natural drainage class is moderately well drained. Water movement in the most restrictive layer is low. Available water to a depth of 60 inches (or restricted depth) is moderate. Shrink-swell potential is low. This soil is not flooded. It is not ponded. A seasonal zone of water saturation is at 23 inches during January, February, March, April, May, June, November, December. Organic matter content in the surface horizon is about 3 percent. Nonirrigated land capability classification is 2e. This soil does not meet hydric criteria.

Component: Guernsey (5%)
Generated brief soil descriptions are created for major soil components. The Guernsey soil is a minor component.

Component: Dormont (5%)
Generated brief soil descriptions are created for major soil components. The Dormont soil is a minor component.

Component: Melvin (2%)
Generated brief soil descriptions are created for major soil components. The Melvin soil is a minor component.

Map Unit: Mn--Melvin and Newark silt loams, 0 to 2 percent slopes

Component: Melvin (45%)

The Melvin component makes up 45 percent of the map unit. Slopes are 0 to 2 percent. This component is on flood plains. The parent material consists of recent silty alluvium derived from limestone, sandstone, and shale. Depth to a root restrictive layer is greater than 60 inches. The natural drainage class is poorly drained. Water movement in the most restrictive layer is moderately high. Available water to a depth of 60 inches (or restricted depth) is very high. Shrink-swell potential is low. This soil is frequently flooded. It is not ponded. A seasonal zone of water saturation is at 6 inches during January, February, March, April, May, December. Organic matter content in the surface horizon is about 3 percent. Nonirrigated land capability classification is 4w. This soil meets hydric criteria.

Component: Newark (40%)
The Newark component makes up 40 percent of the map unit. Slopes are 0 to 2 percent. This component is on flood plains. The parent material consists of recent silty alluvium derived from limestone, sandstone, and shale. Depth to a root restrictive layer is greater than 60 inches. The natural drainage class is somewhat poorly drained. Water movement in the most restrictive layer is moderately high. Available water to a depth of 60 inches (or restricted depth) is very high. Shrink-swell potential is low. This soil is frequently flooded. It is not ponded. A seasonal zone of water saturation is at 12 inches during January, February, March, April, May, December. Organic matter content in the surface horizon is about 3 percent. Nonirrigated land capability classification is 3w. This soil does not meet hydric criteria.

Component: Guernsey (10%)
Generated brief soil descriptions are created for major soil components. The Guernsey soil is a minor component.

Component: Clarksburg (5%)
Generated brief soil descriptions are created for major soil components. The Clarksburg soil is a minor component.

Map Unit: ThB--Thorndale silt loam, 3 to 8 percent slopes

Component: Thorndale (90%)

The Thorndale component makes up 90 percent of the map unit. Slopes are 3 to 8 percent. This component is on depressions, drainageways, lowlands. The parent material consists of fine-silty colluvium derived from limestone, sandstone, and shale. Depth to a root restrictive layer, fragipan, is 20 to 36 inches. The natural drainage class is poorly drained. Water movement in the most restrictive layer is moderately low. Available water to a depth of 60 inches (or restricted depth) is moderate. Shrink-swell potential is low. This soil is not flooded. It is not ponded. A seasonal zone of water saturation is at 3 inches during January, February, March, April, May, October, November, December. Organic matter content in the surface horizon is about 3 percent. Nonirrigated land capability classification is 4w. This soil meets hydric criteria.

Component: Library (10%)

Generated brief soil descriptions are created for major soil components. The Library soil is a minor component.

Map Unit: UhB--Urban land-Guernsey complex, 0 to 8 percent slopes

Component: Urban land (60%)

Generated brief soil descriptions are created for major soil components. The Urban land is a miscellaneous area.

Component: Guernsey (40%)

The Guernsey component makes up 40 percent of the map unit. Slopes are 0 to 8 percent. This component is on hillslopes, uplands. The parent material consists of clayey residuum weathered from limestone and shale. Depth to a root restrictive layer, bedrock, lithic, is 50 to 59 inches. The natural drainage class is moderately well drained. Water movement in the most restrictive layer is very low. Available water to a depth of 60 inches (or restricted depth) is moderate. Shrink-swell potential is high. This soil is not flooded. It is not ponded. A seasonal zone of water saturation is at 16 inches during December. Organic matter content in the surface horizon is about 2 percent. Nonirrigated land capability classification is 2e. This soil does not meet hydric criteria.

CERTIFIED CORRECT PLANS
Professional Engineer
Approved by Bureau of Technical Utility Services
PA PUBLIC UTILITY COMMISSION
ATTEST Secretary

COMMONWEALTH OF PENNSYLVANIA
REGISTERED PROFESSIONAL
DAVID ALAN COLDREN, JR.
ENGINEER NO. PE 060628-E

Copyright © 2021 KLH Engineers, Inc., All Rights Reserved Worldwide

Revisions		
MH ALIGNMENT FOR RR	5/2021	
R/R PROPERTY NOTE	6/2021	
RELEASE FOR BID	8/23/21	
REVISED MH 11C & MH 11D	8/30/21	

5173 Campbells Run Road
Pittsburgh, PA 15205
Phone: 412.494.0510
Fax: 412.494.0426
info@klhengineers.com

KLH ENGINEERS, INC

ROSTRAVER TOWNSHIP SEWAGE AUTHORITY
WESTMORELAND COUNTY, PENNSYLVANIA

PENNDOT S.R. 0070, SECTION E10 - I-70/SR 51 INTERCHANGE PROJECT
EROSION AND SEDIMENTATION POLLUTION CONTROL PLAN

Scale:	As Shown
Date:	02/2021
Drawn By:	RBD
Checked By:	MJE
Approved By:	DAC

Order No. **288-94**
Drawing No. **ES4**
Sheet No. **14 of 16**

Y:\288 Rostraver Township Sewage Authority\288-94 PennDOT SR 51 - I-70 Project\Dwgs\ES288-94-004.dwg (ES4) - Jan 13 2022 10:02:50 am PLOTTED BY: BDudley

Y:\288 Rostraver Township Sewage Authority\288-94 PennDOT SR 51 - I-70 Project\Dwgs\Xref\C288-94 SR70_SANITARY.DWG <SR-70> - Jan 13 2022 10:04:55 am PLOTTED BY: BDudley

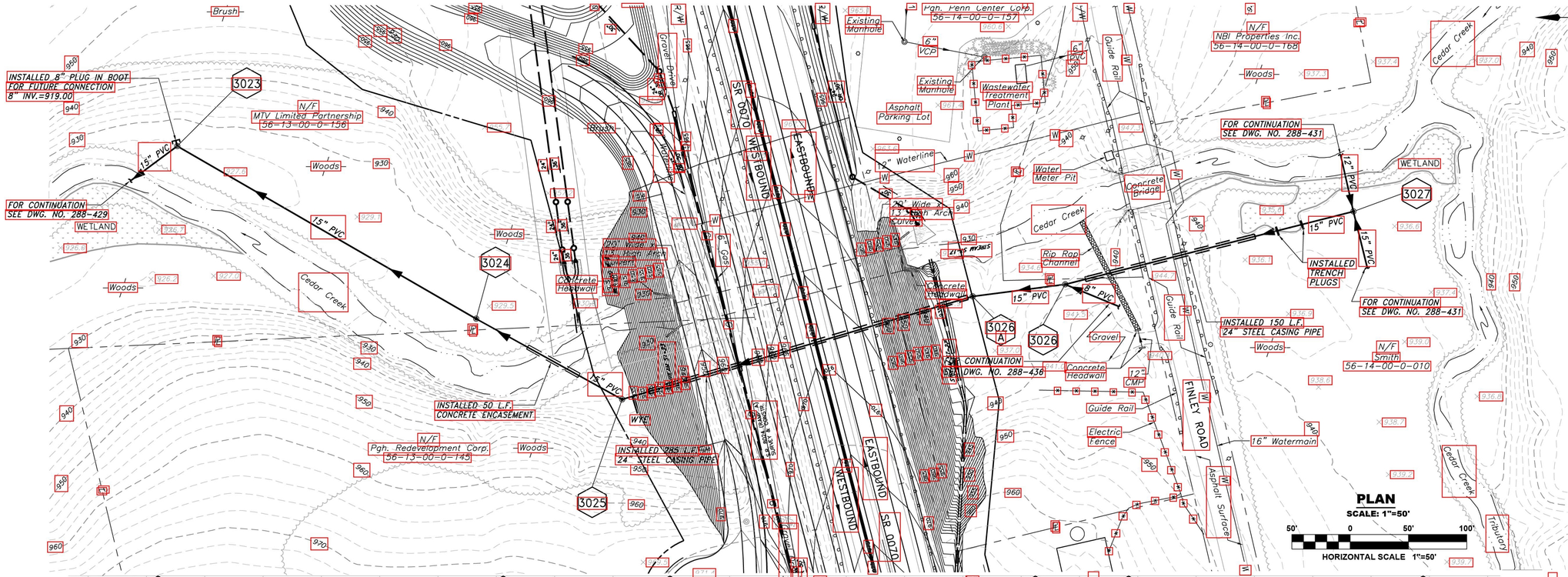

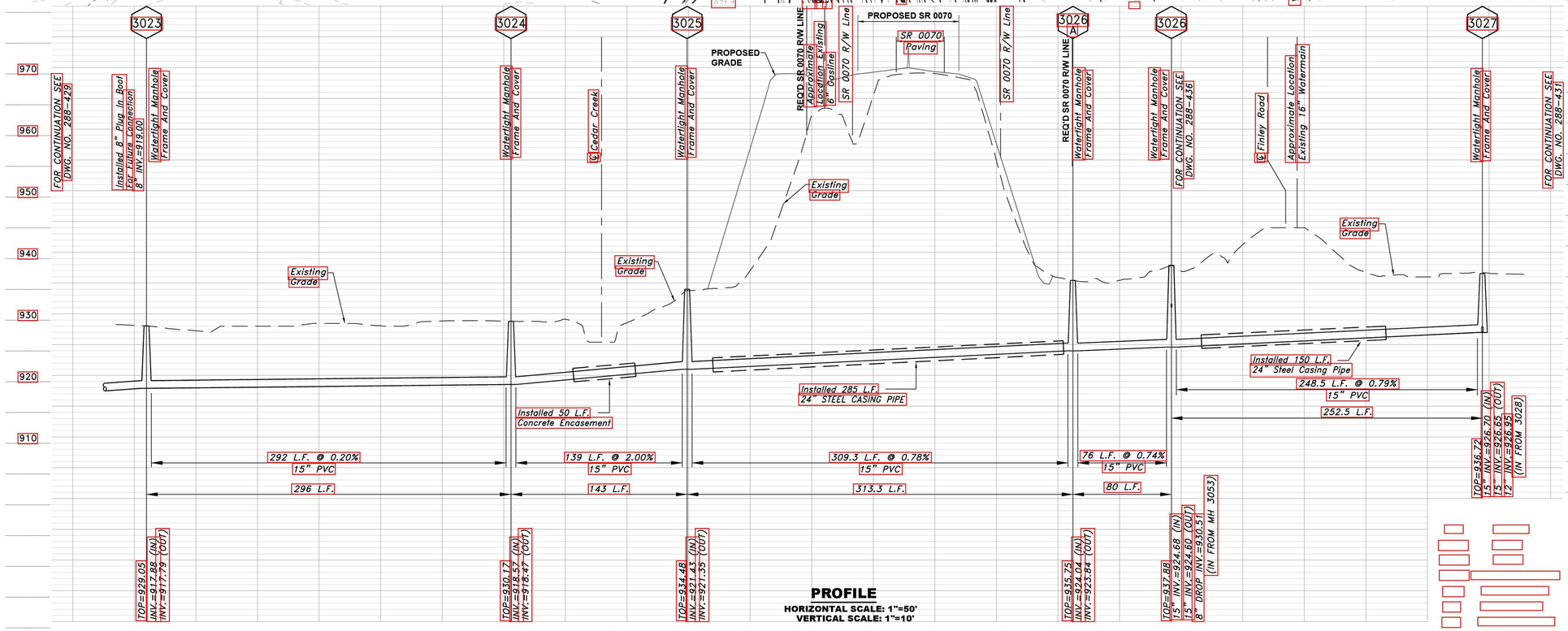

Revisions		
Date		
5/2021	MH ALIGNMENT FOR RR	
6/2021	R/R PROPERTY NOTE	
8/23/21	RELEASE FOR BID	
8/30/21	REVISED MH 11C & MH 11D	

5173 Campbells Run Road
Pittsburgh, PA 15205
Phone: 412.494.0010
Fax: 412.494.0015
info@klhengineers.com

KLH ENGINEERS, INC

ROSTRAVER TOWNSHIP SEWAGE AUTHORITY
WESTMORELAND COUNTY, PENNSYLVANIA
PENNDOT S.R. 0070, SECTION E10 - I-70/SR 51 INTERCHANGE PROJECT
PLAN & PROFILE

CERTIFIED CORRECT PLANS
Professional Engineer
Approved by Bureau of Technical Utility Services
PA PUBLIC UTILITY COMMISSION
ATTEST Secretary

COMMONWEALTH OF PENNSYLVANIA
REGISTERED PROFESSIONAL
DAVID ALAN COLDREN, JR.
ENGINEER
NO. PE 060628-E

Scale:	As Shown
Date:	02/2021
Drawn By:	RBD
Checked By:	MJE
Approved By:	DAC

Order No. 288-94
Drawing No. SR-70
Sheet No. 15 of 16

Copyright © 2021 KLH Engineers, Inc., All Rights Reserved Worldwide

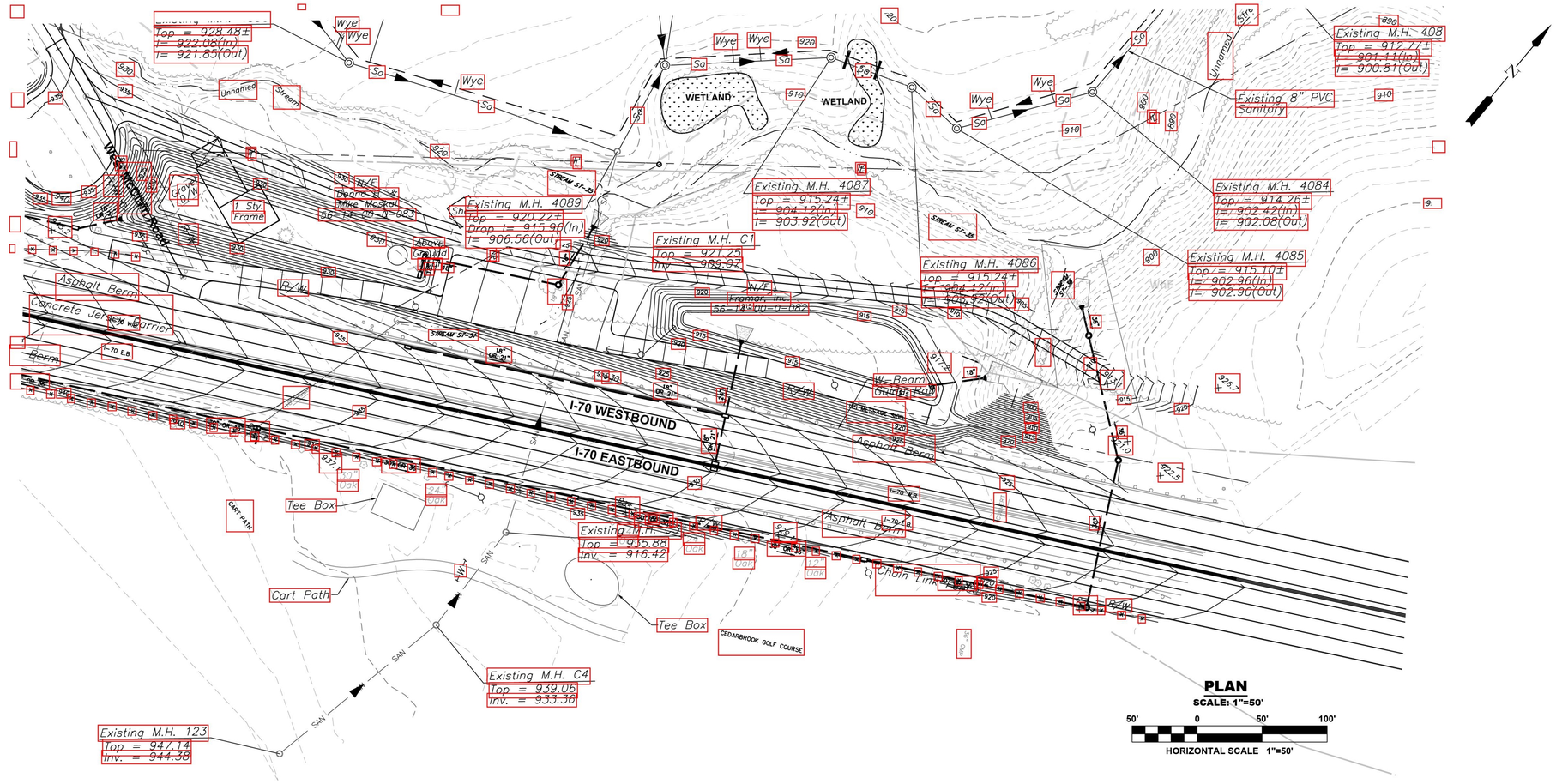

PLAN
SCALE: 1"=50'

HORIZONTAL SCALE 1"=50'

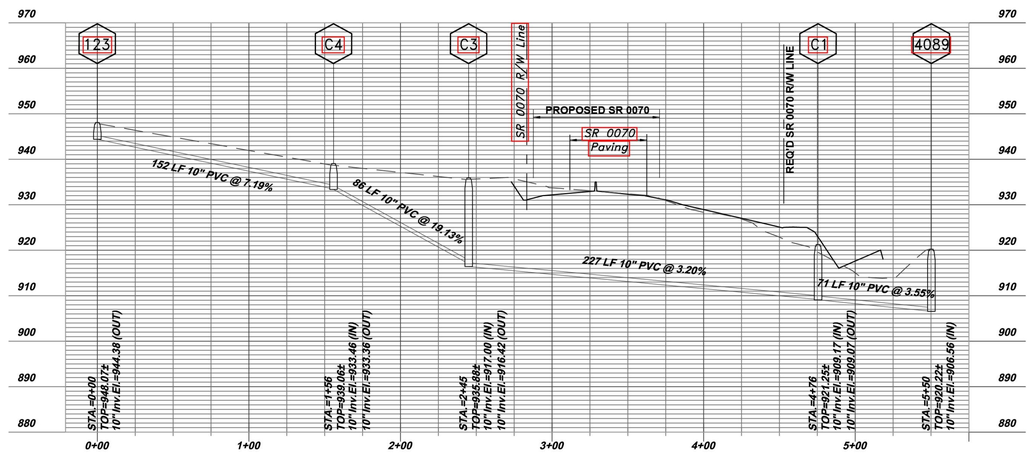

PROFILE
HORIZONTAL SCALE: 1"=50'
VERTICAL SCALE: 1"=10'

HORIZONTAL SCALE 1"=50'

VERTICAL SCALE 1"=10'

CERTIFIED CORRECT PLANS
Professional Engineer
Approved by Bureau of Technical Utility Services
PA PUBLIC UTILITY COMMISSION
ATTEST Secretary

COMMONWEALTH OF PENNSYLVANIA
REGISTERED PROFESSIONAL
DAVID ALAN COLDREN, JR.
ENGINEER NO. PE 080628-E

Copyright © 2021 KLH Engineers, Inc., All Rights Reserved Worldwide

Revisions		
5/2021	MH ALIGNMENT FOR FR	
6/2021	R/R PROPERTY NOTE	
8/23/21	RELEASE FOR BID	
8/30/21	REVISED MH 11C & MH 11D	

5173 Campbells Run Road
Pittsburgh, PA 15205
Phone: 412.494.0010
Fax: 412.494.0015
info@klhengineers.com

KLH ENGINEERS, INC

ROSTRAVER TOWNSHIP SEWAGE AUTHORITY
WESTMORELAND COUNTY, PENNSYLVANIA
PENNDOT S.R. 0070, SECTION E10 - I-70/SR 51 INTERCHANGE PROJECT
PLAN & PROFILE

Scale:	As Shown
Date:	02/2021
Drawn By:	RBD
Checked By:	MJE
Approved By:	DAC

Order No. 288-94
Drawing No. SR-70 2
Sheet No. 16 of 16

Y:\288 Rostraver Township Sewage Authority\288-94 PennDOT SR 51 - I-70 Project\Dwgs\Xref\C288-94_SR70_SANITARY.DWG (SR-70 2) - Jan 13 2022 10:05:56 am PLOTTED BY: BDudley