Post & Schell P.C.
ATTORNEYS AT LAW

17 North Second Street
12th Floor
Harrisburg, PA 17101-1601
717-731-1970 Main
717-731-1985 Main Fax
www.postschell.com

Michael W. Hassell

mhassell@postschell.com
717-612-6029 Direct
717-731-1985 Direct Fax
File #: 182321

January 11, 2022

VIA ELECTRONIC FILING

Rosemary Chiavetta, Secretary
Pennsylvania Public Utility Commission
Commonwealth Keystone Building
400 North Street, 2nd Floor North
P.O. Box 3265
Harrisburg, PA 17105-3265

Re: PA Public Utility Commission v. Aqua Pennsylvania, et al.
Docket Nos. R-2021-3027385, et al.

Dear Secretary Chiavetta:

Attached for filing on behalf of Aqua Pennsylvania, Inc. and Aqua Pennsylvania Wastewater, Inc. (collectively, "Aqua PA" or the "Company") is the Main Brief (Public version) and associated Appendices A through G. Copies will be provided as indicated on the Certificate of Service.

Aqua PA will also be electronically filing a **HIGHLY CONFIDENTIAL** version of its Main Brief through the Pennsylvania Public Utility Commission's ("Commission") SharePoint site. Aqua PA respectfully requests that the **HIGHLY CONFIDENTIAL** version of the Main Brief be maintained in the Commission's non-public files and only made accessible to appropriate Commission staff, consistent with the Protective Order issued in the above-referenced proceeding. The **HIGHLY CONFIDENTIAL** version of Aqua PA's Main Brief will also be provided to parties that have executed an appropriate non-disclosure certificate, pursuant to the Protective Order issued in this proceeding.

In addition, pursuant to the Interim Order on Briefs and Closing Record issued by Administrative Law Judge Mary D. Long (the "ALJ") on December 20, 2021, Aqua PA is transmitting, via Federal Express, one hard copy of the **HIGHLY CONFIDENTIAL** version and one hard copy of the Public version of its Main Brief to:

ALJ Mary D. Long
OALJ
301 Fifth Avenue, Suite 220
Pittsburgh, PA 15222

Please direct any questions regarding this submission to the undersigned.

Respectfully submitted,

Michael W. Hassell

Michael W. Hassell

MWH/kls
Attachments

cc: Honorable Mary D. Long *(w/att.)*
Certificate of Service

CERTIFICATE OF SERVICE
(R-2021-3027385 and R-2021-3027386)

I hereby certify that a true and correct copy of the foregoing has been served upon the following persons, in the manner indicated, in accordance with the requirements of 52 Pa. Code § 1.54 (relating to service by a participant), and the Prehearing Order dated October 19, 2021 (establishing the list of fully active parties in this proceeding).

VIA E-MAIL ONLY

Scott B. Granger, Esquire
Bureau of Investigation & Enforcement
Commonwealth Keystone Building
400 North Street, 2nd Floor West
Harrisburg, PA 17105-3265
sgranger@pa.gov

Christy M. Appleby, Esquire
Harrison W. Breitman, Esquire
Erin L. Gannon, Esquire
Lauren E. Guerra, Esquire
Mackenzie C. Battle, Esquire
Office of Consumer Advocate
555 Walnut Street
Forum Place, 5th Floor
Harrisburg, PA 17101-1923
cappleby@paoca.org
hbreitman@paoca.org
egannon@paoca.org
lguerra@paoca.org
mbattle@paoca.org

Steven C. Gray, Esquire
Office of Small Business Advocate
555 Walnut Street
Forum Place, 1st Floor
Harrisburg, PA 17101
sgray@pa.gov

John W. Sweet, Esquire
Ria M. Pereira, Esquire
Elizabeth R. Marx, Esquire
Lauren Berman, Esquire
Pennsylvania Utility Law Project
118 Locust Street
Harrisburg, PA 17101
PULP@pautilitylawproject.org

Adeolu A. Bakare, Esquire
Charis Mincavage, Esquire
McNees Wallace & Nurick LLC
100 Pine Street
P.O. Box 1166
Harrisburg, PA 17108-1166
Abakare@mcneeslaw.com
Cmincavage@mcneeslaw.com
Counsel for Aqua Large Users Group

George A. Bibikos, Esquire
GA BIBIKOS LLC
5901 Jonestown Road, Suite 6330
Harrisburg, PA 17112
gbibikos@gabibikos.com

Robert Rosenthal
R.A. Rosenthal Inc.
524 Strathmore Dr.
Mechanicsburg, PA 17050
ask-rosey@comcast.net

Brian Kalcic
Excel Consulting
225 S. Meramec Avenue, Suite 720-T
St. Louis, MO 63105
excel.consulting@sbcglobal.net

22917101v1

Richard J. Gage
120 Treaty Drive
Wayne, PA 19087
brittagage@aol.com

Francine Weiner
1903 2nd Street
Langhorne, PA 19047
fhwhome@gmail.com

John Day
614 Runyon Avenue
Piscataway, NJ 08854
john@johnday.us

Michael W. Hassell

Date: January 11, 2022

Michael W. Hassell

22917101v1

PUBLIC VERSION – PROTECTED MATERIALS REDACTED

BEFORE THE
PENNSYLVANIA PUBLIC UTILITY COMMISSION

Pennsylvania Public Utility Commission, *et al.*	:	
	:	
v.	:	Docket Nos. R-2021-3027385, *et al*.
	:	
Aqua Pennsylvania, Inc.	:	

Pennsylvania Public Utility Commission, *et al.*	:	
	:	
v.	:	Docket Nos. R-2021-3027386, *et al*.
	:	
Aqua Pennsylvania Wastewater, Inc.	:	

MAIN BRIEF OF
AQUA PENNSYLVANIA, INC. AND AQUA PENNSYLVANIA WASTEWATER, INC.

Kimberly A. Joyce, Esq. (ID # 86605)
Mary McFall Hopper, Esq. (ID # 60118)
Alexander R. Stahl, Esq. (ID # 317012)
762 W. Lancaster Ave
Bryn Mawr, PA 19010
Phone: 610-645-1077
Phone: 610-645-1170
Phone: 610-645-1130
E-mail: kajoyce@essential.co
E-mail: mmhopper@aquaamerica.com
E-mail: astahl@aquaamerica.com

Michael W. Hassell, Esq. (ID # 34851)
Garrett P. Lent, Esq. (ID # 321566)
Post & Schell, P.C.
17 North Second Street, 12th Floor
Harrisburg, PA 17101
Phone: 717-731-1970
E-mail: mhassell@postschell.com
E-mail: glent@postschell.com

Dated: January 11, 2022

Counsel for Aqua Pennsylvania, Inc., and Aqua Pennsylvania Wastewater, Inc.

TABLE OF CONTENTS

I. INTRODUCTION 1

A. AQUA PENNSYLVANIA, INC. AND AQUA PENNSYLVANIA WASTEWATER, INC. 1

B. HISTORY OF THE PROCEEDINGS 3

C. LEGAL STANDARDS 6

II. SUMMARY OF ARGUMENT 8

III. RATE BASE 15

A. PLANT IN SERVICE 16

B. DEPRECIATION RESERVE 18

C. BOROUGH OF PHOENIXVILLE SYSTEM ACQUISITION 19

1. Introduction. 19

2. The Company's Proposal To Include A Positive Acquisition Adjustment Associated With The Phoenixville Water System Should Be Adopted. 22

3. OCA's And I&E's Proposals To Exclude The Positive Acquisition Adjustment Associated With The Phoenixville Water System Should Be Rejected. 26

4. Conclusion Regarding The Phoenixville Acquisition Adjustment. 30

D. ADDITIONS TO RATE BASE 31

1. Cash Working Capital. 31

2. Materials And Supplies. 32

E. DEDUCTIONS FROM RATE BASE 33

1. Customer Advances and Contributions In Aid Of Construction 33

2. Accumulated Deferred Income Taxes 34

F. CONCLUSION AS TO RATE BASE 35

IV. REVENUES 36

A. INTRODUCTION REGARDING REVENUES 36

B. REVENUE ADJUSTMENTS 38

1. I&E's Proposed Adjustment To Rider DRS Contracts Should Be Rejected. 38

a. Sharpsville. 44

b. Schwenksville. 46

c. Chemung. 47

d. Horsham. 48

e. New Wilmington. 48

f. Masury. 49

2. OCA's Proposed Adjustment To The Escalation Provisions Of Certain Negotiated Water Contracts Should Be Denied. 51

3. Metered Residential Sales Adjustment. 53

4. Forfeited Discounts / Late Payments. 55

C. CONCLUSION AS TO REVENUES 57

V. EXPENSES 57

A. INTRODUCTION REGARDING EXPENSES 57

B. PHOENIXVILLE ACQUISITION – AMORTIZATION EXPENSE ADJUSTMENT 58

C. GENERAL PRICE LEVEL ADJUSTMENT 59

D. EMPLOYEE EXPENSES 64

1. Payroll Expense. 64

2. Employee Benefits Expense. 67

3. Stock-Based Incentive Compensation. 68

4. Supplemental Executive Retirement Plan. 72

E. GENERAL LIABILITY INSURANCE EXPENSE 74

F. RATE CASE EXPENSE 77

G. NON-RATE CASE LEGAL EXPENSE 80

H. PURCHASED WATER EXPENSE 81

I. PURCHASED POWER EXPENSE (WATER) 83

J. CHEMICALS EXPENSE (WATER) 84

K. DREDGING EXPENSE 84

L. ADVERTISING EXPENSE 86

M. CONCLUSION AS TO EXPENSES 87

VI. TAXES 88

A. TAXES OTHER THAN INCOME TAXES 88

1. Payroll Tax Expense. 88

2. Pennsylvania Public Utility Realty Tax Expense. 88

B. INCOME TAXES 89

1. Interest Synchronization. 89

2. Tax Repair Deduction. 90

a. Description Of The Company's Tax Repair Deduction. 90

b. OCA's Proposed Adjustment To The Tax Repair Deduction Should Be Rejected. 92

c. OCA's Proposed Change To The Collar Mechanism Should Not be Adopted. 95

VII. RATE OF RETURN 96

A. INTRODUCTION REGARDING RATE OF RETURN 96

1. Rate of Return Standards. 99

2. Rate Of Return Components. 101

B. CAPITAL STRUCTURE RATIOS 102

1. Aqua PA's Capital Structure. 102

2. OCA's Hypothetical Capital Structure Is Unjustified And Should Be Rejected....103

a. Applicable Legal Standards. 103

b. OCA Has Failed To Demonstrate That Aqua PA's Proposed Capital Structure Is Atypical....105

3. Conclusion as to Capital Structure....107

C. DEBT COST RATE 107

D. RETURN ON COMMON EQUITY 107

1. Aqua PA's Cost Rate for Common Equity Capital. 108

a. Barometer Group. 110

b. DCF. 110

c. Risk Premium....117

d. CAPM. 119

e. Comparable Earnings. 121

f. The Cost Of Equity Should Include An Increment For Management Performance. 122

2. Opposing Parties' Unreasonable Common Equity Cost Rate Recommendations Must be Rejected. 122

a. I&E's Return On Common Equity Recommendation Is Understated. 123

b. OCA's Recommended Cost Of Equity Is Flawed And Should Be Given No Weight. 126

3. Increment For Management Effectiveness. 128

a. Evidence Of Aqua PA's Management Effectiveness. 129

b. Other Parties' Objections To Any Allowance For Management Effectiveness Should Be Rejected 137

E. CONCLUSION AS TO RATE OF RETURN....140

VIII. MISCELLANEOUS ISSUES....140

A. UNIVERSAL SERVICE ISSUES 140

1. Introduction. 140

2. Aqua PA's Proposed CAP Should Be Approved. 144

3. Other Parties' Proposals Regarding The CAP. 148

4. The Costs Of Aqua PA's CAP Should Be Recovered Through The Proposed Reconcilable USR. 155

5. Conclusion Regarding Universal Service Issues. 161

B. QUALITY OF SERVICE ISSUES 161

1. Unaccounted For Water / Non-Revenue Water. 162

2. Pressure And Pressure Surveys. 164

3. Isolation Valves. 170

4. Fire Hydrants. 172

5. Flushing Of The Distribution System. 173

6. Per- and Polfluoroalkul Substances ("PFAS"). 175

7. Water and Wastewater Customer Complaints. 176

6. Public Input Hearing Complaints 177

C. CUSTOMER SERVICE ISSUES 182

1. Settlement Commitments. 184

2. Other Service Quality and Consumer Protection Issues. 188

3. Language Access. 194

D. MASTHOPE MOUNTAIN COMMUNITY ASSOCIATION 195

1. Aqua PA Prudently Planned For Capacity Needs At The Masthope Community In Accordance With Its Obligations Under Section 1501 Of The Public Utility Code. 195

2. The Commission Does Not Have Authority To Order Masthope's Recommendations Regarding PADEP's Chapter 94 Regulations. 198

E. COVID-19 UNCOLLECTIBLES DEFERRAL 200

F. RESPONSES TO DIRECTED QUESTIONS OF COMMISSIONER YANORA 206

IX. RATE STRUCTURE....207

A. COST OF SERVICE....207

B. REVENUE ALLOCATION 211

1. Introduction. 211

2. Act 11 Revenue Allocation. 213

a. Applicable Legal Principles. 213

b. It Is In The Public Interest To Allocate A Portion Of The Wastewater Revenue Requirement To Water Customers. 215

c. The Company's Proposed Act 11 Allocation Is Reasonable and Will Mitigate Significant Rate Impacts for Wastewater Customers During This First Base Rate Case. 216

d. Conclusion Regarding Act 11 Allocation. 224

3. Wastewater Revenue Allocation. 225

4. Water Revenue Allocation. 226

5. Conclusion Regarding Revenue Allocation. 230

C. TARIFF STRUCTURE AND RATE DESIGN....230

1. Water Rate Design. 230

a. Summary Of The Company's Proposed Water Rate Design. 230

b. Other Parties' Recommendations Related To Water Residential Charges. 234

c. Other Parties' Recommendations Related To Water Non-Residential Charges. 236

2. Wastewater Rate Design. 237

a. Summary Of The Company's Proposed Wastewater Rate Design. 237

b. Other Parties Recommendations Related To Residential Wastewater Charges. 238

c. Other Parties Recommendations Related To Wastewater Non-Residential Charges. 245

3. Proposed Reconcilable Rider Mechanisms.....245

a. Applicable Legal Principles. 245

b. Purchased Water Adjustment Clause.....248

c. Energy Cost Adjustment Mechanism 255

d. Federal Income Tax Adjustment Surcharge 259

e. Universal Service Rider 264

D. SCALE BACK.....265

E. BILL IMPACTS 266

F. SUMMARY REGARDING RATE STRUCTURE.....267

X. CONCLUSION.....268

Appendix A – List of Abbreviations
Appendix B – Proposed Conclusions of Law
Appendix C – Proposed Ordering Paragraphs
Appendix D – Responses to the Direct Questions of Commissioner Yanora
Appendix E – Bill Impact Analysis
Appendix F – Rate Case Tables
Appendix G – Schedule of Aqua PA Exhibits and Testimony

TABLE OF AUTHORITIES

Page

Pennsylvania Statutes

66 Pa.C.S. § 102 1
66 Pa.C.S. § 315(a) 6, 7
66 Pa.C.S. § 523(a) 128
66 Pa.C.S. § 1301 6
66 Pa.C.S. § 1303 43
66 Pa.C.S. § 1304 ..... 6, 211
66 Pa.C.S. § 1307(a) ..... *passim*
66 Pa.C.S. § 1311(c) ..... *passim*
66 Pa.C.S. § 1316 ..... 86, 87
66 Pa.C.S. § 1327 ..... *passim*
66 Pa.C.S. § 1328 230
66 Pa.C.S. § 1329 ..... *passim*
66 Pa.C.S. §§ 1401-1418 141
66 Pa.C.S. § 1501 ..... 137, 194, 197, 198

United States Supreme Court Decisions

Bluefield Waterworks and Imp. Co. v. P.S.C. of West Virginia, 262 U.S. 679 (1923) 99, 121
Duquesne Light Co. v. Barasch, 488 U.S. 299, 109 S. Ct. 609, 102 L. Ed. 2d 646 (1989) 100
Federal Power Commission v. Hope Natural Gas Co., 320 U.S. 591 (1944) 99
Miss. Power & Light Co. v. Miss., 487 U.S. 354 (1988) 83
Ohio Bell Telephone Co. v. Pub. Util. Comm. of Ohio, 301 U.S. 292 (1937) 100
Driscoll v. Edison Light and Power Company, 307 U.S. 104 (1939) 57, 68
West Ohio Gas Company v. Public Utility Commission of Ohio, 294 U.S. 63 (1935) 57, 68

Pennsylvania Appellate Court Decisions

Allegheny Center Assocs. v. Pa. PUC, 570 A.2d 149 (Pa. Cmwlth. 1990) 6
Building Owners and Managers Assoc. v. Pa. PUC, 470 A.2d 1092 (Pa. Cmwlth. 1984) 251

Butler Township Water Co. v. Pa. PUC, 473 A.2d 219 (Pa. Cmwlth. 1984) *("Butler Township")* 57, 68

Carnegie National Gas Co. v. Pa. PUC, 433 A.2d 938 (Pa. Cmwlth. 1981) 102

Carpenter v. Pa. PUC, 15 A.2d 473 (Pa. Super. 1940) 251

City of Pittsburgh v. Pa. PUC, 126 A.2d 777 (Pa. Super. 1956) 99

Country Place Waste Treatment Co., Inc. v. Pa. PUC, 654 A.2d 72 (Pa. Cmwlth. 1995) 198

DeFrancesco v. W. Pa. Water Co., 453 A.2d 595, 596-97 (Pa. 1982) 167

Di Santo v. Dauphin Consol. Water Supply Co., 436 A.2d 197 (Pa. Super. 1981) 43

Elkin v. Bell of Pa., 420 A.2d 371, 375 (Pa. 1980) 168

Feingold v. Bell of Pa., 383 A.2d 791 (Pa. 1977) 162, 198

Lloyd v. Pa. PUC, 904 A.2d 1010 (Pa. Cmwlth. 2006), *appeal denied*, 916 A.2d 1104 (Pa. 2007) ("*Lloyd*") 207, 210, 211, 266

Lower Paxton Twp. v. Pa. PUC, 317 A.2d 917 (Pa. Cmwlth. 1974) 99, 100

Lower Frederick Twp. v. Pa. PUC, 409 A.2d 505 (Pa. Cmwlth. 1980) 6

Masthope Rapids Property Owners Council v. Public Utility Commission, 581 A.2d 994 (Pa. Cmwlth. 1990) ("*Masthope*") ..... *passim*

Met. Ed. Co. v. Pa. PUC, 437 A.2d 76 (Pa. Cmwlth. 1981) 219

Octoraro Water Co. v. Pa. PUC, 391 A.2d 1129 (Pa. Cmwlth. 1978) 100

Pa. Indus. Energy Coalition v. Pa. PUC, 653 A.2d 1336 (Pa. Cmwlth 1995), *aff'd*, 670 A.2d 1152 (Pa. 1996) ("*PIEC*") 245

Pa. PUC v. Pennsylvania Gas and Water Co. - Water Division, 341 A.2d 239 (Pa. Cmwlth. 1975) 100

Peoples Natural Gas Co. v. Pa. PUC, 409 A.2d 446 (Pa. Cmwlth. 1979) 211

Pike Cnty. Light & Power Co. v. Pa. PUC, 465 A.2d 735 (Pa. Cmwlth. 1983) 83

Pittsburgh v. Pa. PUC, 78 A.2d 35 (Pa. Super. 1951) 99, 157, 211

Philadelphia Suburban Transportation Co. v. Pa. PUC, 281 A.2d 179 (Pa. Cmwlth. 1971) 211

Philadelphia Suburban Water Company v. Pa. PUC, 808 A.2d 1044 (Pa Cmwlth. 2002) 11, 21, 61, 211

Polites v. Pa. PUC, 928 A.2d 388 (Pa. Cmwlth. 2007) 198

Popowsky v. Pa. PUC, 868 A.2d 606 (Pa. Cmwlth. 2004) ("*PA American*") 111, 112, 113, 114

Popowsky v. Pa. PUC, 869 A.2d 1144 (Pa. Cmwlth. 2005), *appeal denied*, 895 A.2d 552 (Pa. 2006) ("*Popowsky 2005*") 245, 247

Popowsky v. Pa. PUC, 13 A.3d 583 (Pa. Cmwlth. 2011) ("*Popowsky 2011*") 245

PPL Elec. Utils. Corp. v. Pa. PUC, 912 A.2d 386 (Pa. Cmwlth. 2006).....43

Riverton Consolidated Water Co. v. Pa. PUC, 140 A.2d 114 (Pa. Super. 1958).....99

Rovin, D.D.S. v. Pa. PUC, 502 A.2d 785 (Pa. Cmwlth. 1986).....198

T.W. Phillips Gas and Oil Co. v. Pa. PUC, 474 A.2d 355 (Pa. Cmwlth. 1984).....57, 68

United States Steel Corp. v. Pa. PUC, 390 A.2d 849 (Pa. Cmwlth. 1978) 100

United States Federal Court Decisions

Johnstone v. Reading Co., 284 F.2d 71 (3rd Cir. 1957) 24

Sowizral v. Hughes, 333 F.2d 829 (3rd Cir. 1964) 24

Pennsylvania Administrative Agency Decisions

Application of Metropolitan Edison Co., Docket No. R-00974008 (Order dated June 30, 1998)..... 207

Commission's Tentative Implementation Order on Act 11, Docket No. M-2012-2293611 (Issued on May 10, 2012) 214

Customer Assistance Programs: Funding Levels and Cost Recovery Mechanisms, Docket No. M-00051923 (Final Investigatory Order entered Dec. 18, 2006) 156

Emporium Water Company, Docket No. R-2014-2402324 (Order Entered Jan. 18, 2015).....78

Joint Application of Aqua Pennsylvania, Inc. and the Borough of Phoenixville for approval of 1) the acquisition by Aqua of the water system assets of Phoenixville used in connection with the water service provided by Phoenixville in East Pikeland and Schuylkill Townships, Chester County, and Upper Provide Township, Montgomery County, PA; 2) the right of Aqua to begin to supply water service to the public in portions of East Pikeland Township, Chester County, and Upper Provide Township, Montgomery County, PA; and 3) the abandonment of Phoenixville of public water service in East Pikeland Township, Chester County, and Upper Provide Township, Montgomery County, and certain locations in Schuylkill Township, Chester County, PA, Docket Nos. A-2018-2642837, A-2018-3642839, et al. (Recommendation Decision dated Sept. 13, 2019), *adopted as final* (Order entered Oct. 24, 2019) ("*Aqua-Phoenixville Order*") 19

Joint Application of Aqua America, Inc., Aqua Pennsylvania, Inc., Aqua Pennsylvania Wastewater, Inc., Peoples Natural Gas Company LLC and Peoples Gas Company

LLC for All of the Authority and the Necessary Certificates of Public Convenience to Approve a Change in Control of Peoples Natural Gas Company LLC and Peoples Gas Company LLC by Way of the Purchase of All of LDC Funding, LLC's Membership Interests by Aqua America, Inc., Docket Nos. A-2018-3006061, A-2018-3006062 and A-2018-3006063 (Order entered Jan. 24, 2020) ("*Aqua-Peoples Acquisition Order*")....3, 141

Pa. PUC v. ALLTEL Pa., Inc., Docket No. R-942710 et al., 59 Pa. PUC 447, 491, 1985 Pa. PUC LEXIS 53 (Order entered May 24, 1985) ("*ALLTEL*") 102, 103

Pa. PUC v. Aqua Pennsylvania, Inc., Docket No. R-00038805, 236 PUR 4th 218, 2004 Pa. PUC LEXIS 39 (Order entered Aug. 5, 2004) ("*Aqua 2004 Order*") ...6, 112, 234, 235

Pa. PUC v. Aqua Pa., Inc., Docket No. R-0072711, 208 Pa. PUC LEXIS 38 (Recommended Decision dated June 16, 2008) ("*Aqua 2008* RD") 62, 71

Pa. PUC v. Aqua Pa., Inc., Docket No. R-00072711, 2008 Pa. PUC LEXIS 50 (Order dated July 17, 2008) ("*Aqua 2008*") .... *passim*

Pa. PUC, et al. v. Aqua Pennsylvania, Inc., Docket Nos. R-2018-3003558, R-2018-3003561, et al., 2019 Pa. PUC LEXIS 170 (Order entered May 9, 2019) ("*Aqua 2018*")....1, 212, 213, 282

Pa. PUC v. Breezewood Telephone Company, Docket No. R-901666, 1991 Pa. PUC LEXIS 45 (Order dated Jan. 31, 1991)....7

Pa. PUC v. City of Bethlehem, 84 Pa. P.U.C. 275, 304 (1995) 102

Pa. PUC v. City of Lancaster – Water, Docket Nos. R-00984567, et al., 1999 Pa. PUC LEXIS 39 (Order dated Sept. 22, 1999) 102

Pa. PUC v. City of Lancaster Bureau of Water, Docket Nos. R-2010-2179103, et al. (Order dated July 14, 2011) ("*City of Lancaster 2011*") 114, 115

Pa. PUC v. Columbia Gas of Pennsylvania, Inc., Docket Nos. R-2020-3018835, et al. (Order entered Feb. 19, 2021) ("*Columbia 2020*")....96, 104, 122

Pa. PUC v. Columbia Gas of Pennsylvania, Inc., Docket Nos. R-2020-3018835, et al. (Recommended Decision dated Dec. 4, 2020)....124

Pa. PUC v. Columbia Gas of Pennsylvania, Inc., Docket Nos. R-891468, et al., 1990 Pa. PUC LEXIS 162 (Order dated Sept. 20, 1990) ("*CPA 1990*")....61, 62

Pa. PUC v. Duquesne Light Co., 63 Pa. PUC 337, 1987 Pa. PUC LEXIS 342 (Order dated March 10, 1987) 69

Pa. PUC v. Metropolitan Edison Company, et al., Docket Nos. R-00061366, et al., 2007 Pa. PUC LEXIS 5 (Order entered Jan.11, 2007) 7

Pa. PUC v. PECO, Docket No. R-891364, et al., 1990 Pa. PUC LEXIS 155 (Order dated May 16, 1990).....7, 60

Pa. PUC v. Pennsylvania-American Water Company, Docket Nos. R-880916, et al., 1988 Pa. PUC LEXIS (Order dated Oct. 21, 1998) ("*PAWC 1988*") 61, 62

Pa. PUC v. Pennsylvania-American Water Company, Docket No. R-2013-2355276 (Order entered December 19, 2013) ("*2013 PAWC Order*") 213

Pa. PUC v. Pennsylvania-American Water Company, Docket No. R-2017-2595853 (Order entered December 7, 2017) ("*2017 PAWC Order*") 213

Pa. PUC v. Philadelphia Electric Company, Docket No. R-822291, et al., 1983 Pa. PUC LEXIS 9 (Order dated Nov. 22, 1983).....60

Pa. PUC v. Philadelphia Gas Works, Docket Nos. R-00061931, et al., 2007 Pa. PUC LEXIS 45, (Order entered Sept. 28, 2007) 7

Pa. PUC v. Philadelphia Gas Works, Docket No. R-2008-2073938, 2008 Pa. PUC LEXIS 32 (Order dated Dec. 19, 2008) 69

Pa. PUC v. Philadelphia Suburban Water Company, Docket Nos. R-00016750, 2002 Pa. PUC LEXIS 55 (Order entered July 8, 2002) ("*PSW 2002*").....61, 62

Pa. PUC v. Pennsylvania Power & Light Co., 55 PUR 4th 185, 249 (Order dated Aug. 19, 1983).....207

Pa. PUC v. PPL Electric Utilities Corp., Docket No. R-00049255 (Order dated Dec. 6, 2004) 112

Pa. PUC, et al. v. PPL Electric Utilities Corp., Docket Nos. R-00049255, et al., 2007 Pa. PUC LEXIS 55 (Order on Remand entered July 25, 2007).....210

Pa. PUC v. PPL Electric Utilities Corp., Docket No. R-2012-2290597, 2012 Pa. PUC LEXIS 1757 (Recommended Decision dated Oct. 19, 2012) ("*PPL Electric 2012 RD*") 69

Pa. PUC v. PPL Electric Utilities Corp., Docket No. R-2012-2290597 (Order entered Dec. 28, 2012) ("*PPL Electric 2012*")..... *passim*

Pa. PUC v. PPL Gas Utilities Corporation, Docket No. R-00061398, 2007 Pa. PUC LEXIS 2 (Order entered Feb. 8, 2007) 69, 112

Pa PUC v. North Heidelberg Sewer Company, Docket No. M-2018-2645983 (Order entered October 7, 2021) 130

Pa. PUC v. UGI Utilities, Inc. – Electric Division, Docket No. R-2017-2640058 (Order entered October 25, 2018) ("*UGI Electric*")..... *passim*

Pa. PUC v. United Water Pennsylvania, Inc., Docket Nos. R-00973947, et al., 1998 Pa. PUC LEXIS 6 (Order entered Jan. 30, 1998) ("*UPWA 1998*") 61, 62

Pa. PUC v. West Penn Power Company, Docket No. R-850220, 1987 Pa. PUC LEXIS 316 (Order entered April 17, 1987) 24

Pa. PUC v. West Penn Power Company, Docket Nos. R-901609, et al., 1990 Pa. PUC LEXIS 142, 73 Pa. PUC 454, 119 P.U.R.4th 110 (Order dated Dec. 13, 1990) 207

Pa. PUC v. West Penn Power Co., Docket Nos. R-00942986, et al., 1994 Pa. PUC LEXIS 144 (Order dated Dec. 29, 1994) 128

Pa. PUC v. Western Pennsylvania Water Co., 72 PUR 4th 103 (1986).....213

Pa. PUC, et al. v. The York Water Company, Docket Nos. R-2012-2336379, et al., 2012 Pa. PUC LEXIS 1881 (Recommended Decision dated Dec. 6, 2013), *adopted without modification* (Order entered Jan. 9, 2014) ("*York Water 2013*").....213

Petition of the Borough of Phoenixville for a Declaratory Order that the Provision of Water and Wastewater Service to Isolated Customers in Adjoining Townships Does Not Constitute the Provision of Public Utility Service Under 66 Pa. C.S. § 102, Docket No. P-2013-2389321, at 3 (Opinion and Order entered May 19, 2015) ("*Phoenixville Petition Order*").....20, 21, 25, 29

Petition of Pennsylvania-American Water Company for Authorization to Defer, and Record as Regulatory Assets for Future Recovery: (1) Incremental Expenses Incurred Because of the Effects of the COVID-19 Emergency; (2) Revenue Reductions Attributable to the Effects of the COVID-19 Emergency; and (3) Carrying Charges on the Amounts Deferred, Docket No. P-2020-3022426 (Recommended Decision dated June 30, 2021) ("*PAWC COVID Deferral RD*").....201, 203

Petition of Pennsylvania-American Water Company for Authorization to Defer, and Record as Regulatory Assets for Future Recovery: (1) Incremental Expenses Incurred Because of the Effects of the COVID-19 Emergency; (2) Revenue Reductions Attributable to the Effects of the COVID-19 Emergency; and (3) Carrying Charges on the Amounts Deferred, Docket No. P-2020-3022426 (Opinion and Order entered Sept. 15, 2021) ("*PAWC COVID Deferral Order*") 201, 203

Policy Statement Re: Incentives for the Acquisition and Merger of Small, Nonviable Water and Waste Water Systems, Docket No. M-00950686, (Order entered February 23, 1996) ("Policy Statement").....138, 213, 218

Re: Public Utility Service Termination Moratorium Proclamation of Disaster Emergency – COVID-19, Docket No. M-2020-3019244 (Emergency Order dated March 13, 2020) ("*Emergency Order*").....200, 203

Tax Cuts and Jobs Act of 2017, Docket No. M-2018-2641242 (Order entered March 15, 2018)
Tax Cuts and Jobs Act of 2017, Docket No. M-2018-2641242 (Order entered May 17, 2018) ("*TCJA May 17 Order*") 261

Pennsylvania Regulations

52 Pa. Code § 5.321 4

52 Pa. Code § 5.61(d) 4

52 Pa. Code § 56.94 189

52 Pa. Code § 65.3 175

52 Pa. Code § 65.6 .....164, 166, 168

52 Pa. Code § 65.20(4) 25

52 Pa. Code § 69.265 141

52 Pa. Code § 69.266(b) 155

52 Pa. Code § 69.711 .....30, 138

Pennsylvania Administrative Agency Materials

Compliance Filing dated June 30, 2020, Docket Nos. A-2018-3006061, et al.....184

Re: COVID-19 Cost Tracking and Creation of Regulatory Asset, Docket No. M-2020-3019775 (Secretarial Letter dated May 13, 2020) ("Secretarial Letter").....200, 203

TUS Report on the Quarterly Earnings of Jurisdictional Companies for the Year ended June 30, 2021, Docket No. M-2021-3028488, Attachment G ("*Quarterly Earnings Report*") 96, 122, 123

I. INTRODUCTION

A. AQUA PENNSYLVANIA, INC. AND AQUA PENNSYLVANIA WASTEWATER, INC.

Aqua Pennsylvania, Inc. and Aqua Pennsylvania Wastewater, Inc. (collectively, "Aqua PA," "AP" or the "Company") provides water and wastewater public utility service to approximately 450,000 water customers and 40,000 wastewater customers in a certificated service territory that spans 32 counties across the Commonwealth of Pennsylvania. Aqua PA is a "public utility" as that term is defined under the Public Utility Code, 66 Pa.C.S. § 102.

Through this proceeding, Aqua PA requests Pennsylvania Public Utility Commission ("Commission") approval of Tariff Water – Pa. P.U.C. No. 3 ("Tariff Water No. 3") and Tariff Sewer – Pa. P.U.C. No. 3 ("Tariff Sewer No. 3"). The Company filed this combined water and wastewater case in accordance with the provisions of Section 1311(c) of the Public Utility Code. 66 Pa.C.S. § 1311(c). The requested increase is based upon a fully projected future test ending March 31, 2023 ("FPFTY") and is designed to provide the Company with an opportunity to earn a 7.64% overall rate of return on rate base, including a 10.75% return on common equity, resulting in a claimed increase in water revenues of approximately $86.118 million or 16.9%, and a claimed increase in wastewater revenues of approximately $11.566 million or 31.2%. These increases reflect the allocation of a portion of the wastewater revenue requirement to water operations, as referenced below.

A primary driver of the need for rate relief is the Company's continuing need to invest in utility infrastructure replacement. Since March 31, 2020, which was the end of the FPFTY used in the Company's last base rate proceeding at Docket Nos. R-2018-3003558 and R-2018-3003561, et al. (the "2018 Base Rate Case"), the Company has invested nearly $330 million in utility infrastructure for its water and wastewater operations through the historic test year

("HTY") ended March 31, 2021, and the Company projects to invest another $800 million through March 31, 2023. AP St. 1 at 3. This includes a meaningful investment in a new financial reporting system, SAP, which will replace a legacy system that has been in use for nearly 25 years.[1] Increases in operating and maintenance expenses ("O&M") are also a contributing factor to the need for rate relief. AP St. 1 at 4.

Along with Tariff Water No. 3 and Tariff Sewer No. 3, the Company submitted separate revenue requirement studies for its water and wastewater operations. *See* AP Exhibit Nos. 1-A (Water), and 1-B through 1-G (Wastewater). With respect to wastewater operations, Wastewater Base Operations in AP Exhibit Nos. 1-B are the individual wastewater systems that were presented in the Company's 2018 Base Rate Case, and AP Exhibit Nos. 1-C through 1-G present separately the wastewater systems acquired since the 2018 Base Rate Case, as part of the Section 1329 Fair Market Value ("FMV") acquisition process. 66 Pa.C.S. § 1329.

The Company has proposed rate increases to recover its total revenue requirement based on the results of allocated costs of service studies, and the use of informed judgment reflecting principles of gradualism. As permitted by Section 1311(c), the Company also proposed combining a portion of the revenue requirement of its wastewater operations with the revenue requirement of its water operations. Furthermore, as a part of this proceeding, the Company proposed to implement a Universal Service Program ("USP"), including a Customer Assistance Program ("CAP"), the costs of which would be recovered via a reconcilable rider, *i.e.*, the "Universal Service Rider" or "USR." AP St. 2 at 17-18; AP St. 10 at 9. This robust low-income assistance proposal was made consistent with certain commitments included in the

[1] SAP has been in use by Aqua PA's natural gas affiliates since before the acquisition of those affiliates by Aqua PA's parent, Essential Utilities, Inc. ("Essential"), in 2020. Although not claimed in this case, Aqua PA will also be installing SAP software to replace its legacy customer service system.

Commission's approval of the acquisition of the Peoples Companies by Essential, *f/k/a* Aqua America, Inc.[2]

For all of these reasons, as explained below and in the filing, Aqua PA's proposed consolidated water and wastewater rate increase is just and reasonable, and should be approved by the Commission.

B. HISTORY OF THE PROCEEDINGS

This proceeding was initiated on August 20, 2021, when Aqua PA filed Tariff Water No. 3 and Tariff Sewer No. 3 to become effective for service rendered on or after October 19, 2021. Therein, the Company proposed changes to Aqua PA's base water rates designed to produce an increase in water revenues of approximately $86.118 million and changes to Aqua PA's base wastewater rates designed to produce an increase in wastewater revenues of approximately $11.566 million, both based upon data for a FPFTY ending March 31, 2023 ("2021 Base Rate Case"). The filing was made in compliance with the Commission's regulations and contains all supporting data and testimony required to be submitted in conjunction with a tariff change seeking a general rate increase. The cases are docketed at R-2021-3027385 and R-2021-3027386.

On October 7, 2021, the Commission issued an Order suspending Tariff Water No. 3 and Tariff Sewer No. 3 until May 19, 2022, unless permitted by Commission Order to become effective at an earlier date.

The Commission's Bureau of Investigation and Enforcement ("I&E") filed a Notice of Appearance. Complaints against the proposed rate increase were each filed by the Office of

[2] *Joint Application of Aqua America, Inc., Aqua Pennsylvania, Inc., Aqua Pennsylvania Wastewater, Inc., Peoples Natural Gas Company LLC and Peoples Gas Company LLC for All of the Authority and the Necessary Certificates of Public Convenience to Approve a Change in Control of Peoples Natural Gas Company LLC and Peoples Gas Company LLC by Way of the Purchase of All of LDC Funding, LLC's Membership Interests by Aqua America, Inc.*, Docket Nos. A-2018-3006061, A-2018-3006062 and A-2018-3006063 (Order entered Jan. 24, 2020) ("*Aqua-Peoples Acquisition Order*").

Consumer Advocate ("OCA"), the Office of Small Business Advocate ("OSBA"), Aqua Large Users Group ("Aqua LUG"), East Norriton Township, and Masthope Mountain Community Association ("Masthope"). In addition, the Coalition for Affordable Utility Service and Energy Efficiency in Pennsylvania ("CAUSE-PA") filed a Petition to Intervene.

Aqua PA also received several complaints against the 2021 Base Rate Case from a variety of customer complainants since its initial filing. On September 8, 2021, Aqua PA filed a letter indicating that it had been served with a number of formal complaints and anticipated it would be served with additional complaints. As such, Aqua PA stated it would rely upon 52 Pa. Code § 5.61(d), which provides:

> For complaints which are docketed with Commission-instituted rate proceedings, an answer may be filed within 10 days of date of service. However, an answer is not required, except as may be directed by the Commission or the presiding officer.

Aqua PA further stated that if the Commission believed that answers should be filed to any specific complaints and directs Aqua PA to do so, it would request that it be provided 20 days from the date of such directive to file answer to such complaints.

An initial Prehearing Conference was scheduled and held on October 15, 2021 before Administrative Law Judge Mary D. Long (the "ALJ"). Parties participating in the Prehearing Conference filed Prehearing Memoranda identifying potential issues and their expected witnesses. At the Prehearing Conference, the ALJ established a procedural schedule that was agreed upon and proposed by the parties. In addition, the ALJ approved modified discovery rules, which included shorter response times than those provided for in the Commission's regulations at 52 Pa. Code §§ 5.321 *et seq*. Further, the water and wastewater filing dockets were consolidated for the purposes of hearing and decision.

Six public input hearings, conducted by telephone, were held on November 8, 2021 at 6:00 p.m., November 9, and November 10, at 1:00 p.m. and 6:00 p.m. and November 12, 2021 at 1:00 p.m.

The parties engaged in substantial formal and informal discovery. Aqua PA responded to more than 800 discovery requests, many of which had multiple subparts. In addition, substantial discovery requests were propounded to other parties.

On November 10, 2021, parties other than Aqua PA served their Direct Testimony and associated exhibits, other than some testimony relating to accounting, regulatory policy, rate base, revenues, expenses, and taxes. On November 12, 2021, some parties other than Aqua PA served their Direct Testimony on the subjects of accounting and regulatory policy, rate base, revenues, expenses, and taxes. On November 19, 2021, Supplemental Direct Testimony addressing public input hearing testimony was served. On December 2, 2021, Aqua PA, OSBA, OCA, CAUSE-PA, I&E, and Masthope filed Rebuttal Testimony and associated Exhibits. Aqua PA, Aqua LUG, CAUSE-PA, I&E, Masthope, OCA, and OSBA served Surrebuttal Testimony and exhibits on December 14, 2021. On December 17, 2021, Aqua PA served Rejoinder Testimony.

Evidentiary hearings were held before the ALJ on December 20, 2021. At the hearing, Counsel for Aqua PA, I&E, OCA, OSBA, CAUSE-PA, Aqua LUG, and Masthope appeared. Parties mutually agreed to waive all cross-examination of witnesses. Additionally, the parties' respective testimony and exhibits were admitted into the evidentiary record. The OCA also moved for the admission of Day Exhibit 2 on behalf of Complainant John Day. No party objected to the admission of Day Exhibit 2.

Consistent with the ALJ's Prehearing Order and the Interim Order On Briefs Closing the Record, Aqua PA hereby submits this Main Brief. Accompanying this Brief are: Appendix A – List of Abbreviations; Appendix B – Proposed Conclusions of Law; Appendix C – Proposed Ordering Paragraphs; Appendix D – Responses to the Directed Questions of Commissioner Yanora; Appendix E – Bill Impact Analysis; Appendix F – Rate Case Tables;[3] and Appendix G – Schedule of Aqua PA Exhibits and Testimony.

C. LEGAL STANDARDS

Under the Public Utility Code, a public utility's rates must be just and reasonable and cannot result in unreasonable rate discrimination. 66 Pa.C.S. §§ 315(a), 1301 and 1304. A public utility seeking a general rate increase has the burden of proof to establish the justness and reasonableness of every element of the rate increase request. 66 Pa.C.S. § 315(a); *Pa. PUC v. Aqua Pennsylvania, Inc.*, Docket No. R-00038805, 236 PUR 4th 218, 2004 Pa. PUC LEXIS 39 (Order entered Aug. 5, 2004) ("*Aqua 2004 Order*"). "It is well-established that the evidence adduced by a utility to meet this burden must be substantial." *Lower Frederick Twp. v. Pa. PUC*, 409 A.2d 505, 507 (Pa. Cmwlth. 1980).

However, a public utility, in proving that its proposed rates are just and reasonable, does not have the burden to affirmatively defend claims made in its filing that no other party has questioned. As the Commonwealth Court has explained:

> While it is axiomatic that a utility has the burden of proving the justness and reasonableness of its proposed rates, it cannot be called upon to account for every action absent prior notice that such action is to be challenged.

Allegheny Center Assocs. v. Pa. PUC, 570 A.2d 149, 153 (Pa. Cmwlth. 1990).

[3] Appendix F is being submitted in PDF and live Excel format.

Although the ultimate burden of proof does not shift from the utility seeking a rate increase, a party proposing an adjustment to a ratemaking claim of a utility bears the burden of presenting some evidence or analysis tending to demonstrate the reasonableness of the adjustment. *See, e.g., Pa. PUC v. PECO*, Docket No. R-891364, *et al.*, 1990 Pa. PUC LEXIS 155 (Order dated May 16, 1990); *Pa. PUC v. Breezewood Telephone Company*, Docket No. R-901666, 1991 Pa. PUC LEXIS 45 (Order dated Jan. 31, 1991). In addition, tariff provisions previously approved by the Commission are deemed just and reasonable and, therefore, a party challenging a previously-approved tariff provision bears the burden to demonstrate that the Commission's prior approval is no longer justified. *See, e.g.*, *Pa. PUC v. Philadelphia Gas Works*, Docket Nos. R-00061931, *et al.*, 2007 Pa. PUC LEXIS 45, at *165-68 (Order entered Sept. 28, 2007) (adopting the ALJ's discussion on burden of proof).

Further, a party that raises an issue that is not included in a public utility's general rate case filing bears the burden of proof. For example, in *Pa. PUC v. Metropolitan Edison Company, et al.*, Docket Nos. R-00061366, *et al.*, 2007 Pa. PUC LEXIS 5 (Order entered Jan.11, 2007), a party offered proposals to have the companies incur expenses not included in their filings. The ALJ held that, as the proponent of a Commission order with respect to its proposals, the party bears the burden of proof as to proposals that are not included in the companies' filings. The Commission agreed and adopted the ALJ's conclusion that Section 315(a) of the Public Utility Code cannot reasonably be read to place the burden of proof on the utility with respect to an issue the utility did not include in its general rate case filing and which, frequently, the utility would oppose. *Id.*, at *111-12.

II. SUMMARY OF ARGUMENT

Aqua PA's request for rate relief totaling $97.6 Million is based upon data for a FPFTY ending March 31, 2023. Aqua PA last filing for a general rate increase was based upon a FPFTY ending March 31, 2020. Thus, it has been approximately three years since Aqua PA last sought a base rate increase. The magnitude of the increase is driven primarily by infrastructure requirements, particularly the needed replacement of aging infrastructure. This case reflects approximately $1.1 Billion in additional plant investment since the end of the FPFTY in the last case. AP St. 1 at 3.

Since the filing of this rate case, the need for rate relief has grown. For example, as the country's economy has recovered from the pandemic restrictions in 2020, supply chain issues have arisen. As Aqua PA's witness, Mr. Packer, explained:

> Production and delivery times, normally in the 20-to-30-day range, were expected to move to 40-to-60 day or worse. To combat these supply chain delays, the Company had to move up its ordering schedule for projects requiring this inventory and as a result, the Company's inventory balances have climbed substantially since filing this rate case. For rate making purposes, the recovery for the working capital required to maintain adequate inventory supply is a component of rate base, calculated using a 13-month average. In the Company's initial filing in this case, that average shown in Exhibit 1-A, Sch. G-4 Line 17 was $7,672,303. As of October 31, 2021, however, that balance is now $17,996,441.

AP St. 1-R at 5.

A second emergent issue after the rate case was filed is inflation, as Mr. Packer noted:

> Secondly, inflation is certainly in the news and a real issue that needs to be dealt with. The Company's as filed claims for operating and maintenance expenses ("O&M"), that are not subject to specific adjustments are adjusted instead by a general inflation adjustment. At the time of the initial filing, the data available to the Company pointed to a 1.70% inflation factor, which the Company applied to approximately 20% of the overall O&M expense categories. Certainly, the factor is higher today than it was just six months ago, and the Company expects the factor to be

> sustained well into 2022. Again, this is yet another example of a cost that will likely be experienced by the Company that is not reflected in Aqua PA's as-filed case.

AP St. 1 at 5-6.

Despite the unrebutted evidence of Aqua PA's substantial additional investments in infrastructure replacement and prevailing market conditions that make it more expensive for Aqua PA to make these investments, OCA and I&E proposed inappropriate adjustments to the Company's requested increase in revenues. OCA has proposed a revenue decrease of more than $12.1 Million. OCA Exhibit LA-5, Schedule A, p. 2. I&E's proposed increase is $33.9 Million. I&E St. 1-SR at 6. A summary of the principal issues is presented next.

RATE OF RETURN. The largest single driver of these unreasonable revenue requirement positions is Rate of Return. The most important, and generally the most controversial and difficult issue in a base rate proceeding is determining rate of return. This issue is of particular importance in this proceeding. Aqua PA, like most other major utilities in Pennsylvania, is in the midst of major infrastructure improvements, which are critically important to maintaining safe and reliable service to customers. This includes the need to invest in the repair and improvement of the various wastewater systems the Company has acquired, many of which are troubled for a variety of reasons. AP St. 1 at 7. To successfully execute its infrastructure improvement program, Aqua PA must have reasonable access to capital markets. Supportive regulation, and, in particular, a compensatory cost of common equity, are critical for Aqua PA to continue to attract capital investment. Investors have a range of choices of where to invest. As such, the investment community will carefully examine this outcome to determine if the Commission intends to continue to be supportive for investment.

The Company has proposed a cost rate for common equity of 10.75%, which is based upon an evaluation of multiple cost of service models. In analyzing the reasonableness of this

recommendation, it is particularly important that the Commission take into account recent increases to the cost of capital that arose after the presentation of the Company's direct case and that have not been given due consideration by OCA or I&E. Inflation is rising dramatically, and the Federal Open Market Committee ("FOMC") has announced policy changes that will increase interest rates. This indicates that capital costs in the FPFTY will be higher than recent historic costs. Thus, the cost rate for common equity in this case should be set at a rate that is meaningfully above the current distribution system improvement charge ("DSIC") rate established by the Commission, which is 9.8%

OCA has presented several unreasonable proposals that would be most detrimental to supportive regulation. First, OCA has proposed the adoption of a hypothetical capital structure, which is a substantial reduction from the actual capital structure proposed by Aqua PA. Aqua PA's capital structure is squarely within the range of capital structures of the barometer groups offered in this case. Clear precedent holds that a hypothetical capital structure should not be used unless the actual structure is atypical. OCA's hypothetical capital structure should be rejected.

Second, OCA has presented a clearly unreasonable 8.0% rate of return on common equity. OCA supports this recommendation through the use of a completely improper Discounted Cash Flow ("DCF") calculation, that relies upon an unreasonably low growth rate component. This extremely low growth rate is influenced by OCA witness Mr. Garrett's stated belief that a regulated utility's growth rate should be less than the U.S. economic growth rate. From this position, he asserts that Aqua PA's growth rate is likely between 2% and 4%. OCA's capital asset pricing model ("CAPM") analysis presents an even more unreasonable result of 4.9% to 6.4%, which is based upon an unjustifiably low equity risk premium.

I&E's recommended return on common equity is only a slightly less unreasonable 8.90%. This recommendation reflects I&E's sole reliance on its DCF methodology. That DCF result is distorted by the inclusion of an extremely low growth rate for one barometer group company. Removal of that unreasonably low data point would have increased the I&E DCF calculation by nearly 60 basis points. Moreover, I&E's reliance on only its DCF results completely ignores its CAPM result of 9.89%. The use of a single methodology to derive a rate of return on common equity recommendation ignores the flaws inherent in each method.

OCA and I&E also refuse to include any component for management performance in the cost of equity recommendation. The Commission has granted this adjustment in various rate cases, including a 22 basis point increment in a prior Aqua PA case, based upon record evidence of management effectiveness. Aqua PA has submitted substantial evidence supporting the addition of an increment for management performance in this case.

RATE BASE. The primary adjustment to rate base is related to the Company's proposal to claim a positive acquisition adjustment related to the Borough of Phoenixville water system acquisition. In 2019, Aqua PA acquired a portion of the Borough of Phoenixville water system, which was experiencing substantial (68%) levels of lost water and had over 30% of its hydrants that needed repair or replacement. Aqua PA has sought to include recovery of the acquisition premium that Aqua PA paid for the system. OCA and I&E oppose this recovery, as well as the Company's related amortization expense claim, despite the provisions of Section 1327(a) of the Public Utility Code. OCA's and I&E's opposition is without merit and should be denied.

REVENUES AND EXPENSES. OCA and I&E have also proposed various revenue and expense adjustments opposed by Aqua PA. Several of those adjustments are highlighted here.

I&E seeks to have the Company cancel several long-term negotiated rate contracts, and reflect revenues from these negotiated contract customers at full tariff rates. At the time these long-term contracts were entered into, the customers considered and demonstrated, to the Company's satisfaction, alternatives to obtaining water service from the Company. Aqua PA negotiated in good faith with these customers to provide service at discounted rates, which has allowed the Company to obtain revenues it otherwise would not have received. Nevertheless, I&E attempts to undermine the benefits of the parties' good-faith bargain, and challenge the existence of competitive alternatives while the contracts are currently in place. I&E's after-the-fact challenges to these negotiated rates, which if successful would ultimately be to the detriment of other customers, should be rejected.

In presenting its pro forma revenues at present rates for the FPFTY, Aqua PA made certain adjustments to HTY sales volumes made to residential, commercial and public customers, in recognition of the effects of the COVID-19 pandemic. The pandemic increased residential volumes above pre-pandemic levels as people stayed at home more, and reduced commercial and public customers sales by offsetting amounts. The Company's adjustment recognized that by the FPFTY, class usage would return to pre-pandemic levels. OCA proposes to disallow 25% of Aqua PA's residential usage adjustment, while accepting the commercial and public adjustments. This proposal is unfair and unsupported. The data presented shows that both trends (reducing residential usage and increasing commercial and public usage) are occurring as projected by the Company.

OCA proposes to disallow a price level adjustment that reflects the effects of inflation on operating expenses that were not specifically adjusted in this case. This adjustment has been recognized in numerous prior cases involving Aqua PA and other utilities. The adjustment is

supported by data showing that these expenses have increased at rates well in excess of inflation, and thus is relatively conservative.

OCA also proposes to disallow a portion of the Company's incentive compensation expense. The Company has demonstrated that its incentive compensation plan includes operating metrics and goals directly related to the provision of service. Thus, under established Commission precedent, the Company's incentive compensation expense should be allowed in its entirety.

The Company made an updated claim for general liability insurance that reflected known 2022 expense, plus an adjustment for FPFTY expense that considered the historic growth in this expense category. OCA and I&E oppose this claim, and unreasonably seek to ignore the known increase for 2022.

I&E seeks to disallow a portion of the Company's purchased water expense, for rates paid by Aqua PA to an Ohio affiliate for purchases to serve a distinct portion of the Company's service area in and around Shenango, PA. These purchases are made at the tariff rate set by the Ohio Public Utilities Commission. I&E has not demonstrated that Aqua PA has an alternative to purchases from the Ohio affiliate, and bases its disallowance solely on the fact that Aqua PA sells water to a different Ohio operating division at a different rate.

OCA proposes to increase the Company's tax repair deduction, which would decrease tax expense. OCA makes two errors in its proposed adjustment. First, OCA uses an incorrectly computed three year average of repairs deductions to derive the Company's FPFTY deduction. Second, OCA improperly seeks to disallow an adjustment to account for a deduction that more likely than not will be disallowed by the IRS. OCA's adjustments should be rejected.

LOW-INCOME CUSTOMER PROPOSAL. Aqua PA is committed to assisting its low-income customers. As part of this proceeding, the Company proposed a new, comprehensive, robust and transparent USP. The program includes a CAP, which provides tiered bill discount benefits to customers based upon income levels. The use of three tiers recognizes that there are literally dozens of different rates in effect for Aqua PA's water and wastewater customers. The USP has also retained the arrearage forgiveness and water conservation components currently in effect for the Company's Helping Hand Program. The USP also proposes a new Emergency Repair Program, to assist low-income customers in the event of problems such as broken service lines. Aqua PA proposed to recover costs of implementing the CAP through a USR that is similar to the riders in place at the Peoples Companies and other energy utilities throughout the state.

Other parties have recommended various changes to the program design. Several of these changes are not possible to adopt due to the limits of the Company's customer information system ("CIS"). Improvements to that system are expected in several years. These proposals should be taken up by other parties in the Company's next base rate case, where the costs and benefits of the changes can be fully examined.

OCA proposes that the costs of the USR, and in particular the CAP, be recovered in base rates. This is contrary to the commitments and expectations that were contained in the settlement of the acquisition of the Peoples Companies in 2020. It is also unfair and lacks transparency. The costs of a new program, with no limits on customer participation, are very difficult to project. A reconcilable rider will allow all parties to see what costs are being incurred, how effective the Company is in customer outreach and ensures that non-CAP customers who are paying the cost of the program are only responsible for actual costs.

REVENUE ALLOCATION AND RATE DESIGN. The issue of greatest importance with regard to revenue allocation and rate design concerns the allocation of a portion of the wastewater revenue requirement to water customers pursuant to the provisions of Section 1311(c) of the Public Utility Code, 66 Pa.C.S. § 1311(c). The Company has proposed a 31.2% increase, on average, to wastewater rates. However, this is not sufficient to cover the fully allocated revenue requirement of wastewater customers. The Company has allocated $20.8 Million of wastewater revenue requirement to water customers. This represents an allocation of approximately 30% of the Company's proposed revenue requirement from wastewater to water customers. OCA and I&E have proposed to reduce that allocation roughly in half. The effect of these proposals would be to further substantially increase the 31.2% increase to wastewater customers proposed by the Company. These proposals fail to consider principles of gradualism. If adopted it would also substantially and adversely affect the policy behind Section 1311(c), which is to spread to a large customer base the cost of wastewater infrastructure repairs and replacement that otherwise would be too great for customers of small wastewater systems to bear.

For reasons explained below, Aqua PA's requested revenue increase, its proposed revenue allocation and rate design, and its USP should be adopted.

III. RATE BASE

The Company's claim for rate relief in this case is based upon data for the FPFTY ending March 31, 2023. Aqua PA, Volume 1, Statement of Specific Reasons for Proposed Increase in Rates. Additionally, in accordance with the Commission's regulations, the Company has provided extensive data for the HTY ended March 31, 2021, and the FTY ending March 31, 2022. *See* AP Exhibit 1-A (Water); AP Exhibits 1-B through 1-G (Wastewater). However, unless specifically noted, all figures referenced herein will be based upon FPFTY data only.

Aqua PA's claimed combined rate base for its water and wastewater operations consists of (a) the depreciated original cost of its utility plant in service at March 31, 2023, (b) the fair market value of its acquisition of the Borough of Phoenixville water system, and (c) rate base additions and deductions made in accordance with accepted ratemaking procedures, as explained below.

A. PLANT IN SERVICE

Schedule G-2 of AP Exhibit 1-A (water) and AP Exhibits 1-B through 1-G (wastewater) show the Company's actual utility plant in service as of March 31, 2021, and the projected utility plant in service per scheduled additions and retirements associated with the FTY and FPFTY. AP St. 2 at 14. The Company's claim for both water and wastewater utility plant in service begins with the actual HTY ending balance for each segment of its operations. AP St. 2 at 14. For water, this HTY ending balance was $4,909,729,427 and for wastewater the HTY ending balance was $500,221,311. AP St. 2 at 14; *see also* AP Exhibit 1-A, Schedule G-2; AP Exhibits 1-B through 1-G, Schedule G-2.

The HTY figures for water and wastewater were then increased to reflect FTY and FPFTY plant additions, net of retirements, and utility plant acquisition adjustments ("UPAA")[4] associated with certain acquired systems. AP St. 2 at 14-15. Company witness Feeney provided the anticipated additions and retirements of water assets for the FTY and FPFTY, which included needed improvements to the Company's infrastructure such as water supply, storage and distribution facilities. *See* AP St. 2 at 15; AP St. 2, Attachment 1. For the FTY, the Company projected additions totaling $402,940,579 and retirements totaling ($36,896,955). AP St. 2,

[4] The Company's HTY figures presented on Schedule G-2 do not reflect the Company's proposed UPAA. Adjustments related to proposed UPAA are reflected in Schedule G-3 of AP Exhibits 1-A and 1-G through 1-G. All UPAA shown have been previously approved by the Commission, with the exception of the Borough of Phoenixville acquisition that is explained later in this Brief.

Attachment 1 at 1. For the FPFTY, the Company projected additions totaling $314,771,304 and retirements totaling ($28,466,740). AP St. 2, Attachment 1 at 2. Ms. Feeney also explained that the majority of the Company's capital investment remains in distribution assets such as mains, services, hydrants valves, and meters. AP St. 2 at 15.

Ms. Feeney further provided the anticipated additions and retirements of wastewater assets for the FTY and FPFTY. AP St. 2 at 15; AP St. 2, Attachment 2. Company witness Mr. Todd Duerr further explained the Company's capital investment planning process for wastewater operations. AP St. 9 at 3. Moreover, Mr. Duerr identified and explained major projects included in the Company's claimed wastewater utility plant in service, including:

- (1) investments in the Penn Township Wastewater Treatment Plant ("WWTP") to address operational reliability challenges and renew assets at the end of their useful life (*see* AP St. 9 at 4-5);
- (2) the construction of a new headworks facility at the Little Washington WWTP (*see* AP St. 9 at 5-6);
- (3) the installation of a new equalization tank and the installation of an influent screen at the Twin Hills WWTP (*see* AP St. 9 at 6);
- (4) capital investment to optimize the amount of water that can be sprayed on available lands via spray irrigation with respect to the New Garden Township system (*see* AP St. 9 at 6-7);
- (5) the second phase of the replacement of the Media Wastewater Treatment Plant (*see* AP St. 9 at 7);
- (6) implementation of an abatement program and capital investment into the Cheltenham Township Wastewater System (*see* AP St. 9 at 7-8);
- (7) numerous ongoing investments into Aqua PA's Northeast PA Wastewater Treatment facilities (*see* AP St. 9 at 8-10); and
- (8) continued upgrades to the Treasure Lake Wastewater System (*see* AP St. 9 at 10-11).

For the FTY, the Company projected additions totaling $34,134,821 and retirements totaling ($3,416,157). AP St. 2, Attachment 2 at 1. For the FPFTY, the Company projected additions totaling $38,897,468 and retirements totaling ($3,014,299). AP St. 2, Attachment 2 at 2.

None of the other parties to this proceeding challenged the Company's claim for water or wastewater utility plant in service at the end of the FPFTY, except for the challenge explained in Section III.C. below regarding the positive acquisition adjustment associated with the Borough of Phoenixville water system.

Therefore, and for the reasons more fully explained in the Company's initial filing, the Company's claim for water utility plant in service of $5,562,077,614 (AP Exhibit 1-A, Schedule G-2) and wastewater utility plant in service of $566,823,145 (AP Exhibits 1-B through 1-G, Schedule G-2) should be accepted without modification.

B. DEPRECIATION RESERVE

The Company's depreciation reserves for water and wastewater as of the end of the FPFTY were calculated by Gannett Fleming Valuation and Rate Consultants, LLC, generally using the straight-line remaining life method. *See generally* AP St. 6; AP Exhibit Nos. 6-A through 6-G. Importantly, the Company's current claim for accrued depreciation in this proceeding is made on the same basis as it has been for over thirty years. AP St. 6 at 5.

The only proposed adjustment to Aqua PA's Accrued Depreciation Reserve is with respect to the OCA and I&E proposal to remove the positive acquisition adjustment associated with the Borough of Phoenixville water system. As OCA's and I&E's proposed adjustment is improper, as explained in Section III.C. below, so also is the related adjustment to the Company's depreciation reserve.

For these reasons, and the reasons more fully explained in the Company's initial filing, the Company's claim for accrued depreciation as of the end of the FPFTY should be accepted without modification.

C. BOROUGH OF PHOENIXVILLE SYSTEM ACQUISITION

1. Introduction.

Since the Company's 2018 Base Rate Case, Aqua PA acquired a portion of the Borough of Phoenixville water system, and such acquisition has not yet been reflected in rate base. AP St. 2 at 16.[5] In this proceeding, AP Exhibit 3-A contains the journal entry and the original cost study for Aqua PA's acquisition of these assets. AP St. 2 at 16. Included in this entry is a positive acquisition adjustment that reflects the fact the Company paid more than the depreciated original cost ("DOC") for the asset. AP St. 2 at 16; *see also* AP Exhibit 3-A. The Company has requested a return on and return of the purchase price in this proceeding consistent with Section 1327 of the Public Utility Code, 66 Pa.C.S. § 1327, which is reflected in the positive acquisition adjustment as of the end of the FPFTY of $2,315,440 set forth in AP Exhibit 1-A, Schedule G-3.

Before describing the Company's satisfaction of Section 1327, and the other parties' failure to rebut the presumption that the excess of DOC paid by the Company for the Phoenixville water system assets is reasonable and should be included in the Company's rate base, a brief overview of the history of the subject assets is necessary. Prior to Aqua PA's acquisition of these assets, the Borough of Phoenixville provided service to 552 extraterritorial

[5] The acquisition of the subject water system assets was approved by the Commission in *Joint Application of Aqua Pennsylvania, Inc. and the Borough of Phoenixville for approval of 1) the acquisition by Aqua of the water system assets of Phoenixville used in connection with the water service provided by Phoenixville in East Pikeland and Schuylkill Townships, Chester County, and Upper Provide Township, Montgomery County, PA; 2) the right of Aqua to begin to supply water service to the public in portions of East Pikeland Township, Chester County, and Upper Provide Township, Montgomery County, PA; and 3) the abandonment of Phoenixville of public water service in East Pikeland Township, Chester County, and Upper Provide Township, Montgomery County, and certain locations in Schuylkill Township, Chester County, PA*, Docket Nos. A-2018-2642837, A-2018-3642839, et al. (Recommendation Decision dated Sept. 13, 2019), *adopted as final* (Order entered Oct. 24, 2019) ("*Aqua-Phoenixville Order*").

water customers, in addition to water and wastewater customers located within its municipal boundaries. *Petition of the Borough of Phoenixville for a Declaratory Order that the Provision of Water and Wastewater Service to Isolated Customers in Adjoining Townships Does Not Constitute the Provision of Public Utility Service Under 66 Pa. C.S. § 102*, Docket No. P-2013-2389321, at 3 (Opinion and Order entered May 19, 2015) ("*Phoenixville Petition Order*"). In 2013, the Borough filed a Petition for Declaratory Order that requested the Commission declare the Borough's provision of extraterritorial service to these customers to be private in nature and should not be subject to the Commission's jurisdiction. *Phoenixville Petition Order* at 3. Among the reasons associated with this request, the Borough explained that:

> The Borough is currently subject to the Commission's jurisdiction. However, the potentially significant costs and manpower required to prepare and defend a rate filing before the Commission would place <u>an unreasonable and unnecessary strain upon the Borough's already limited financial and operational resources</u>. In past years, the disproportionate cost of rate filings compared to the minimal revenues recovered from the Borough's small extraterritorial customer base <u>has deterred the Borough from seeking rate relief and created cost subsidies flowing from inside-borough customers to outside-borough customers</u>. To the contrary, granting the Petition would eliminate the Borough's PUC compliance expenses and additionally reduce administrative expenses currently incurred to maintain separate billing systems.

Phoenixville Petition Order at 3-4 (quoting the petition) (emphasis added).

The Commission denied the Petition, and in relevant part explained that:

> Finally, the Commission would be remiss if we did not acknowledge Phoenixville's concern regarding the regulatory "burden" related to Commission jurisdiction. However, the Commission believes these so-called "burdens" are justifiable and if reasonable, recoverable from ratepayers. Commission oversight provides voiceless extraterritorial customers with service protections and it ensures reasonable rates that will provide for safe and reliable service over the long term. Similarly, the Commission would also be remiss if we did not acknowledge that unlike in the prior municipal corporation cases, <u>there are viable options for the Borough, namely, PAWC's provision of public utility service in</u>

> Upper Providence Township and Aqua Pennsylvania's provision of public utility service in Schuylkill Township. In conclusion, Phoenixville clearly has options to these perceived regulatory "burdens" which may prove beneficial to explore[.]

Phoenixville Petition Order at 7-8. The Commission further highlighted the fact that "The Borough at one time served more than 650 customers throughout Schuylkill Township, but sold its Schuylkill Township assets to Philadelphia Suburban Water Company, now Aqua Pennsylvania, in 1995." *Phoenixville Petition Order* at 8, n.10 (citation omitted). In this regard, the Commission imposed a regulatory requirement that Phoenixville sell the assets used to serve the extraterritorial customers, if it wanted to avoid the regulatory burdens associated with the Commission's jurisdiction.

The Borough subsequently did just that as explained in the *Aqua-Phoenixville Order*.[6] The settlement approved by this order provided for Aqua PA's acquisition of the subject water system assets, which the Commission found "promotes the service, accommodation, convenience, or safety of the public in a substantial way by providing efficient and cost effective service to the public in addition to resolving the ownership of and responsibility for facilities questioned at the start of the proceeding." *Aqua-Phoenixville Order* at 16 (emphasis added). Indeed, the order further recognized that:

> the Joint Petition is fully consistent with the Commission's guidance (essentially a regulatory requirement) in a prior order denying the Borough's request for a finding that its service to customers in the adjoining outside townships does not constitute public utility service subject to the Commission's jurisdiction. The public interest supports the transfer of the remaining assets and remaining customers to Aqua.

[6] Aqua PA notes that, although the OCA was not a party to the settlement approved in that proceeding, it indicated it did not oppose the settlement.

Aqua-Phoenixville Order at 16 (emphasis added). It also concluded as a matter of law that the Commission, in its prior order, "encouraged the Borough to pursue a sale of its water system assets." *Aqua-Phoenixville Order* at 19, Conclusion of Law ¶ 14.

2. The Company's Proposal To Include A Positive Acquisition Adjustment Associated With The Phoenixville Water System Should Be Adopted.

Against this backdrop, it is clear that the Company has satisfied the requirements of Section 1327 of the Public Utility Code. 66 Pa.C.S. § 1327. Section 1327(a) specifically provides:

> **(a) Acquisition cost greater than depreciated original cost.--**If a public utility acquires property from another public utility, a municipal corporation or a person at a cost which is in excess of the original cost of the property when first devoted to the public service less the applicable accrued depreciation, <u>it shall be a rebuttable presumption that the excess is reasonable and that excess shall be included in the rate base of the acquiring public utility, provided that the acquiring public utility proves that:</u>
>
> > (1) the property is used and useful in providing water or sewer service;
> >
> > (2) the public utility acquired the property from another public utility, a municipal corporation or a person which had 3,300 or fewer customer connections or which was nonviable in the absence of the acquisition;
> >
> > (3) the public utility, municipal corporation or person from which the property was acquired was not, at the time of acquisition, furnishing and maintaining adequate, efficient, safe and reasonable service and facilities, <u>evidence of which shall include, but not be limited to, any one or more of the following</u>:
> >
> > > (i) violation of statutory or regulatory requirements of the Department of Environmental Resources or the commission concerning the safety, adequacy, efficiency or reasonableness of service and facilities;

(ii) a finding by the commission of inadequate financial, managerial or technical ability of the small water or sewer utility;

(iii) a finding by the commission that there is a present deficiency concerning the availability of water, the palatability of water or the provision of water at adequate volume and pressure;

(iv) a finding by the commission that the small water or sewer utility, because of necessary improvements to its plant or distribution system, cannot reasonably be expected to furnish and maintain adequate service to its customers in the future at rates equal to or less than those of the acquiring public utility; or

(v) any other facts, as the commission may determine, that evidence the inability of the small water or sewer utility to furnish or maintain adequate, efficient, safe and reasonable service and facilities;

(4) reasonable and prudent investments will be made to assure that the customers served by the property will receive adequate, efficient, safe and reasonable service;

(5) the public utility, municipal corporation or person whose property is being acquired is in agreement with the acquisition and the negotiations which led to the acquisition were conducted at arm's length;

(6) the actual purchase price is reasonable;

(7) neither the acquiring nor the selling public utility, municipal corporation or person is an affiliated interest of the other;

(8) the rates charged by the acquiring public utility to its preacquisition customers will not increase unreasonably because of the acquisition; and

(9) the excess of the acquisition cost over the depreciated original cost will be added to the rate base to be amortized as an addition to expense over a reasonable period of time with corresponding reductions in the rate base.

66 Pa.C.S. § 1327(a) (emphasis added). As noted above, Aqua PA purchased the Phoenixville water system assets at an amount in excess of DOC and has included a positive acquisition adjustment as a part of this proceeding. AP St. 2 at 16; *see also* AP Exhibit 3-A. Aqua PA has satisfied each of the nine criteria set forth in Section 1327(a), and, therefore, is entitled to a "a rebuttable presumption that the excess is reasonable, and that excess shall be included in the rate base of the acquiring public utility." *Id.*[7]

It is not disputed by any party that the Company has satisfied Section 1327(a)(1)-(2), and (4)-(9). *See* AP Exhibit 3-A, Schedule entitled "SATISFACTION OF THE CRITERIA ESTABLISHED BY §1327(A) FOR INCLUDING IN RATE BASE A POSITIVE ACQUISITION ADJUSTMENT." Therefore, the evidence submitted by the Company with respect to each of these criteria is unrebutted.

With respect to Section 1327(a)(3), it is important to first note that the Public Utility Code provides a non-exclusive and non-exhaustive list of evidence that may be presented by a utility to demonstrate that the seller was not providing adequate, efficient, safe, and reasonable service and facilities. 66 Pa.C.S. § 1327(a)(3) ("the public utility, municipal corporation or person from which the property was acquired was not, at the time of acquisition, furnishing and maintaining adequate, efficient, safe and reasonable service and facilities, <u>evidence of which shall include, but not be limited to, any one or more of the following</u>:…" (emphasis added)). Consistent with this non-exclusive and non-exhaustive list of evidence, the Company explained it satisfied this requirement as follows:

[7] A rebuttable presumption is a rule of law requiring presumption of one fact (the presumed fact) upon proof of another (the proved fact), in the absence of satisfactory direct evidence of the presumed fact. It places on the adverse party the burden of going forward with further evidence in rebuttal, but it does not affect the ultimate burden of proof. *Pa. PUC v. West Penn Power Company*, Docket No. R-850220, 1987 Pa. PUC LEXIS 316, at *17 (Order entered April 17, 1987) (citing *Sowizral v. Hughes*, 333 F.2d 829 (3rd Cir. 1964); *Johnstone v. Reading Co.*, 284 F.2d 71 (3rd Cir. 1957)).

(v) a. Provider was manually reading residential and commercial meters

b. Non-revenue water estimated at 68%

c. 30% (32/105) of system hydrants needed repair or replacement

AP Exhibit 3-A, Schedule entitled "SATISFACTION OF THE CRITERIA ESTABLISHED BY §1327(A) FOR INCLUDING IN RATE BASE A POSITIVE ACQUISITION ADJUSTMENT".

Importantly, the condition of the system at the time of its acquisition demonstrates that the Borough was not providing adequate, efficient, safe, or reliable service. The high-level of non-revenue or unaccounted for water, estimated at 68%, is extremely poor, indicating substantial leaks and metering issues. The Commission's Statement of Policy on water conservation notes that unaccounted-for water levels above 20% have been considered by the Commission to be excessive. 52 Pa. Code § 65.20(4). In addition, Aqua PA identified that there is a need to repair or replace almost 1/3 of existing fire hydrants. AP St. 2-R at 8 ("Having non-revenue water of approximating 68%, and having to replace 30% of all hydrants in the system is a clear indication that this was a troubled system."). It must also be remembered that these inadequacies could not be addressed by the Borough of Phoenixville because, as it represented to the Commission, "the disproportionate cost of rate filings compared to the minimal revenues recovered from the Borough's small extraterritorial customer base has deterred the Borough from seeking rate relief." *Phoenixville Petition Order* at 3 (quoting the petition). Moreover, the Commission has indicated that the sale of these assets was fully consistent with what was "essentially a regulatory requirement" imposed by the *Phoenixville Petition Order*. *See Aqua-Phoenixville Order* at 16.

Aqua PA has demonstrated that the seller was not providing adequate, efficient, safe, and reasonable service and facilities at the time of the acquisition, and that the acquisition of the

subject assets was conducted in accordance with a regulatory requirement imposed by the Commission upon the Borough of Phoenixville. Therefore, Aqua PA has satisfied Section 1327(a), and is entitled to the rebuttal presumption that the positive acquisition adjustment claimed in this case is reasonable and shall be included in Aqua PA's rate base.

3. OCA's And I&E's Proposals To Exclude The Positive Acquisition Adjustment Associated With The Phoenixville Water System Should Be Rejected.

Both I&E and OCA oppose the Company's proposed positive acquisition adjustment related to the Phoenixville water system, and recommended that the Company's claim for a positive acquisition adjustment to rate base of $2,315,440 be denied. *See* I&E St. 3 at 6-9; OCA St. 2 at 9-14.

I&E witness Mr. Sakaya argued that "Aqua has not demonstrated that the Phoenixville acquisition satisfies all of the required Section 1327(a) criteria." I&E St. 3 at 7. He specifically asserts that the conditions set forth in subparagraph 3 of Section 1327(a) have not been met, and claims that the service issues identified in Aqua PA's application to acquire the system related to manually reading meters, having non-revenue water approximating 68%, and having to repair or replace 30% of all hydrants in the system, are not sufficient to satisfy Section 1327(a)(3). I&E St. 3 at 7-8. He further claims the Commission did not address any environmental issues related to this system in the acquisition order. I&E St. 3 at 8-9.

OCA witness Ms. DeAngelo makes similar claims. OCA St. 2 at 11.[8] She argues that Aqua PA has not shown the Borough was providing inadequate service to its customers at the time of the acquisition, because (a) there is no evidence the Borough was in violation of statutory or regulatory requirements at the time of the acquisition, (b) the Commission did not determine

[8] OCA witness Mr. Smith relies upon Ms. DeAngelo's testimony to support his proposed adjustment. OCA St. 1 at 20-21.

the Borough's financial, managerial or technical abilities were inadequate, (c) the Commission did not determine there were deficiencies concerning the availability or palatability of water, or the provision of it at adequate pressure/volume, and (d) there were no issues with adequate service due to improvements to plant or the system. OCA St. 2 at 11-12. Ms. DeAngelo further disputes the bases provided by Aqua PA under the fifth criteria of Section 1327(a)(3), and argues the purchase agreement contained representations and warranties about the system's compliance with all regulatory and other laws. OCA St. 2 at 12-13. Finally, she argues that the acquisition was only for a portion of the Borough's system (*i.e.*, the portion located outside its municipal boundaries) and that the Borough continues to operate a system serving water and wastewater customers, as well as providing wholesale water supply to Aqua PA, evidence that the Borough was not providing inadequate service at the time of the acquisition. OCA St. 2 at 13-14.

I&E's and OCA's arguments in support of their proposed disallowance have no merit under the language of the statute. I&E and OCA appear to be suggesting that the Company can only satisfy Section 1327(a)(3) by presenting evidence consistent with <u>only and all of the five categories</u> listed in this subpart. *See* 66 Pa.C.S. § 1327(a)(3) (listing subparts (i) through (v)); *see also* I&E St. 3 at 8-9 and OCA St. 2 at 11-12.

However, Section 1327(a)(3) states that "the public utility, municipal corporation or person from which the property was acquired was not, at the time of acquisition, furnishing and maintaining adequate, efficient, safe and reasonable service and facilities, evidence of which shall <u>include, but not be limited to, any one or more of the following</u>:…". 66 Pa.C.S. § 1327(a)(3) (emphasis added). Moreover, the five categories of evidence listed in this subpart are listed in the disjunctive, and the fifth category of evidence makes clear that the Commission is vested with broad authority to determine whether a utility has satisfied Section 1327(a)(3). *Id.*

§ 1327(a)(3)(v) (stating the Commission shall consider "any other facts, as the commission may determine, that evidence the inability of the small water or sewer utility to furnish or maintain adequate, efficient, safe and reasonable service and facilities…"). The plain language of this provision makes clear that it provides a non-exclusive and non-exhaustive (*i.e.*, include, but not be limited to) list of evidence that a utility must satisfy. I&E and OCA's assertion that Aqua PA is required to produce the type of evidence, and only the type of evidence, set forth in the first four categories in Section 1327(a)(3) is inconsistent with the plain language of this subpart.

I&E and OCA's claim that the evidence provided in AP Exhibit 3-A by Aqua PA does not satisfy Section 1327(a)(3)(v) should also be rejected. As explained by Aqua PA witness Ms. Feeney, "Having non-revenue water of approximating 68%, and having to replace 30% of all hydrants in the system is a clear indication that this was a troubled system." AP St. 2-R at 8. With respect to the non-revenue water issue, Ms. Feeney stated "the Company proactively performed leak surveys, verified hydrant pressures, and checked valve operations. This system is now currently on the Company's ongoing maintenance program." AP St. 2-R at 8-9. The fact that the Company was required to investigate significant unaccounted for water issues and target the resolution of these issues via its maintenance program makes clear that the Borough had failed to do so during its ownership.[9] Moreover, Aqua PA explained that "fire protection is a significant safety and reliability issue which the Company addressed by inspecting 105 fire hydrants, replacing 13 hydrants, and repairing 19 hydrants." AP St. 2-R at 8. In addition, the Company's meter replacement efforts addressed issues related to meter reading and billing of

[9] I&E witness Mr. Sakaya attempts to argue that "[t]he fact that the Borough decided not to replace meters, hydrants, mains, and main related plant does not indicate the Borough did not have the expertise or the funds to replace meters and hydrants." I&E St. 3 at 8. This misses the point. Regardless of the expertise or funds available to the Borough at the time of the acquisition, it had failed to address a significant issue associated with the adequacy and efficiency of service provided to the customers served by this system, which is evidence that satisfies Section 1327(a)(3). Moreover, as explained previously, the Borough could not afford to undertake the repairs needed, as the cost to seek a rate increase deterred the filing of a rate case.

customers. *See* AP St. 2-R at 9. This evidence demonstrates that Aqua PA has satisfied Section 1327(a)(3)(v).

OCA witness Ms. DeAngelo's additional argument that the purchase agreement contains representations and warranties regarding the system's compliance with all laws and regulations also misses the mark. OCA St. 2 at 12-13. The *Aqua-Phoenixville Order* makes clear that the Commission essentially imposed a regulatory requirement upon the Borough of Phoenixville to sell the portion of its system serving extraterritorial customers in its prior *Phoenixville Petition Order*. *Aqua-Phoenixville Order* at 16 ("…the Joint Petition is fully consistent with the Commission's guidance (essentially a regulatory requirement) in a prior Order…" (emphasis added)). Regardless of the representations and warranties included in the purchase agreement, the Commission clearly indicated that the Borough of Phoenixville must sell the system to another public utility if it cannot comply with the regulatory burdens and requirements imposed by the Public Utility Code on its extraterritorial service. *Phoenixville Petition Order* at 7-8. The Borough could not comply with these regulatory requirements, and as such sold the subject assets.

OCA's further claim that the Borough's continued provision of service within its municipal boundaries demonstrates it was not providing inadequate service at the time of the acquisition is irrelevant. The system used by the Borough to provide service within its municipal boundaries is not at issue; the extra-territorial system is. With respect to that portion of its system, the Borough clearly explained that:

> In past years, the disproportionate cost of rate filings compared to the minimal revenues recovered from the Borough's small extraterritorial customer base has deterred the Borough from seeking rate relief and created cost subsidies flowing from inside-borough customers to outside-borough customers.

Phoenixville Petition Order at 3 (quoting the petition) (emphasis added). Through this statement, the Borough made clear that it could not seek rate relief with respect to its extra-territorial customers, and that the inside-borough customers were subsidizing the service provided to them. This makes clear that the Borough was unable to address inadequacies with respect to the extra-territorial system acquired by Aqua PA, including the non-revenue water and fire hydrant issues identified by the Company. Moreover, it must also be remembered that "this system was owned by an entity that did not want to continue to provide service to these customers." AP St. 2-R at 9. Therefore, the argument that Phoenixville "could have provided service" is the same for any troubled system that would come under Section 1327.

Finally, it must be remembered that the Commission's policy encourages regionalization and the acquisition of smaller troubled systems by larger capable public utilities. *See* 52 Pa. Code § 69.711. The issues facing the system noted by Aqua PA witness Ms. Feeney make clear that "[t]he Phoenixville acquisition was a prime candidate for using this policy." AP St. 2-R at 8. The Commission should not adopt a disallowance proposed by I&E and OCA that would run counter to this policy and, moreover, would be contrary to the regulatory requirement imposed upon the Borough of Phoenixville.

4. Conclusion Regarding The Phoenixville Acquisition Adjustment.

Aqua PA has presented substantial evidence that satisfies the requirements of Section 1327(a), with respect to its proposal to claim a positive acquisition adjustment for the portion of the Phoenixville water system it has acquired. The arguments against the adjustment proposed by I&E and OCA are contrary to the plain language of Section 1327(a)(3), contrary to the Commission's prior orders and announced policies, and also unsupported by the facts. Therefore, Aqua PA has demonstrated that it is entitled to a positive acquisition adjustment of

$2,315,440 regarding the Phoenixville water system and that this amount should be included in its claimed rate base for water operations.

D. ADDITIONS TO RATE BASE

1. Cash Working Capital.

Cash Working Capital ("CWC") is the capital requirement arising from the difference between (1) the lag in the receipt of revenue for rendering service and (2) the lag in the payment of cash expenses incurred to provide that service. The Company's CWC claims for water and wastewater operations includes the necessary working capital associated with operations and maintenance ("O&M") expense, taxes and interest. *See* AP Exhibit 1-A(a), Schedule G-5; *see, e.g.*, AP Exhibit 1-B(b), Schedule G-5.[10] For water operations, its CWC amount claim is $1,736,000. AP Exhibit 1-A(a), Schedule G-5. For wastewater base operations, its CWC amount claimed is $550,000. AP Exhibit 1-B(b), Schedule G-5.

No parties challenged the Company's lead/lag study[11] or its calculation of (a) the average lag days in payment of expenses, taxes or interest, (b) the average lag day in receipt of revenues, or (c) the average lag days between payment of expenses and receipt of revenue. *See, e.g.*, I&E St. 1 at 30 (agreeing with the Company's use of the lead/lag study method). I&E, however, recommended an adjustment to the CWC for water operations based on its recommended adjustments to revenue, O&M expenses and taxes. I&E St. 1 at 30-31; *see also* Aqua St. 1-R at 10. I&E did not recommend any adjustments to wastewater base operations, or any individual wastewater operations because the proposed adjustments did not result in material changes to the respective CWC claims. I&E St. 1 at 30. With respect to I&E's proposed adjustments to CWC, these adjustments should be rejected for the same reasons that the Company explains various of

[10] Schedule G-5 in Exhibits 1-C through 1-G reflect the CWC amounts claimed for each of the individual wastewater operations claimed in this proceeding.

[11] *See* AP St. 1 at 27 (describing the results of the lead/lag study).

I&E's proposed adjustments to expenses and taxes should be rejected. *See* Sections V. and VI. *infra*.

OCA's proposed adjustments to CWC were initially limited to the interest component of CWC. OCA St. 1 at 24-25. However, OCA witness Mr. Smith subsequently revised his recommendations to reflect updates of operating expenses based on OCA's proposed adjustments to operating expenses. OCA St. 1-SR at 12. With respect to OCA's proposed adjustments to CWC based upon its adjustments to expenses, these adjustments should be rejected for the same reasons set forth in Sections V. and VI. *infra*.

OCA's adjustment to CWC based off its proposed adjustment to interest should also be rejected. Aqua PA witness Mr. Packer explained that this proposed adjustment is "related to OCA Witness Garrett's proposal to adopt a capital structure with greater long-term debt than the Company's actual projected capital structure." AP St. 1-R at 10. The use of a hypothetical capital structure is improper and should be rejected for the reasons set forth in Section VII.B. *infra*. OCA failed to demonstrate that the Company's proposed capital structure was atypical or unreasonable and, therefore, its associated adjustment to the interest component of CWC should similarly be denied.

For these reasons, and the reasons more fully explained in the Company's testimony and exhibits, the Company's claimed CWC for water and wastewater operations should be approved.

2. Materials And Supplies.

Aqua PA's rate base for water operations also includes an addition of $7,672,303 for materials and supplies. AP St. 1 at 27; AP Exhibit 1-A, Schedule G-4. This amount was developed by averaging the monthly balances in the Materials and Supplies account for water operations for the thirteen months ended March 31, 2021. AP St. 1 at 27. Aqua PA's wastewater filing includes a Schedule G-4, but "Aqua PA does not maintain a significant amount

of standby materials and supplies for wastewater operations and, therefore, material and supplies [for wastewater operations] are expensed as they are purchased." AP St. 1 at 27.

No parties challenged the Company's claim for an addition to rate base for materials and supplies. Therefore, the Company's claim should be approved without modification.

E. DEDUCTIONS FROM RATE BASE

1. Customer Advances and Contributions In Aid Of Construction

"A customer advance for construction or 'CAC' is funds paid to a utility for an extension of service that is refunded over time to the applicant for service." AP St. 2-R at 9. Similarly, "[c]ontributions in aid of construction or 'CIAC' are amounts furnished by applicants for facilities that may not be subject to a refund." AP St. 2-R at 9. Both CAC and CIAC are treated as a reduction to a utility's rate base. AP St. 2-R at 9.

Schedule G-6 of AP Exhibits 1-A and 1-B contain the Company's proposed reductions to rate base for CAC and CIAC. With respect to water operations, the Company's claim for CAC and CIAC reduced rate base by ($178,784,735). AP Exhibit 1-A, Schedule G-6. With respect to wastewater base operations, the Company's claim reduced rate base by ($20,965,154). AP Exhibit 1-B, Schedule G-6.[12]

OCA proposed two adjustments related to CAC and CIAC, to further reduce the Company's rate base. OCA witness Mr. Smith proposes a $6.431 million decrease to the Company's water rate base and a $2.994 million decrease to its wastewater rate base related to CAC and CIAC. OCA St. 1 at 22-23. In support of this adjustment, OCA asserted that the starting point for the Company's claimed balances as of March 31, 2021, were understated. OCA St. 1 at 21-22.

[12] No adjustments for CAC and CIAC were included in Exhibits 1-C through 1-G.

However, Aqua PA witness Ms. Feeney explained in her rebuttal testimony that the amounts relied upon by Mr. Smith:

> were the Company's per book amounts for all CAC and CIAC related accounts as of the end of the HTY. The difference Mr. Smith has identified between these per book amounts and the amounts claimed in AP Exhibit 1-A and 1-B, Schedule G-6 <u>are non-utility plant items</u>. As they are non-utility plant items, they are not included in AP Witness Mr. Spanos' Exhibits 6-A through 6-G. <u>If the Company were required to adjust CAC and CIAC as Mr. Smith has proposed, the Company would need to make an equal and offsetting adjustment to include the offsetting Utility Plant in Service, which would affect total rate base</u>.

AP St. 2-R at 10 (emphasis added). Based upon this explanation, OCA subsequently withdrew its proposed adjustment. OCA St. 1-SR at 12.

Therefore, the Company's claimed reductions to rate base associated with CAC and CIAC should be adopted without modification.

2. Accumulated Deferred Income Taxes

The total accumulated deferred income taxes ("ADIT") set forth in the Company's rate base calculation on Schedule G-1 of each of AP Exhibit Nos. 1-A(a) through 1-G(g) is a total of $392,515,121 for water and $9,356,312 for wastewater. *See* AP St. 8 at 14; *see also* AP Exhibit Nos. 1-A(a) through 1-G(g), Schedule G-7. These amounts included normalized ADIT and the unamortized balance of excess ADIT resulting from various federal income tax rate reductions. AP St. 8 at 14. In rejoinder testimony, Aqua PA witness Ms. Saball identified an additional $6.1 Million[13] to be deducted from water rate base associated with the Company's claim regarding the treatment of uncertain tax positions in computing the flow-through deduction for tax repairs ("FIN48 adjustment"). AP St. 8-R at 7; AP St. 8-RJ at 3. The additional $6.1 Million is

[13] In rejoinder testimony, Ms. Saball identified the additional amount to be deducted as $5.1 Million; however, the testimony identified $3.4 Million of additional ADIT as of March 31, 2021 and an additional $2.7 Million through the end of the FPFTY. AP St. 8-RJ at 3. The Rate Case Tables attached to this Brief as Appendix F reflect these amounts.

reflected in the rate case tables attached to this Brief. *See* Appendix F. OCA accepted the additional rate base deduction associated with uncertain tax positions, even though OCA continues to oppose the Company's treatment of uncertain tax positions in computing the flow-through deduction for tax repairs. OCA St. 1-SR at 13-15.

The issue regarding the appropriate treatment of uncertain tax positions in computing the flow-through deduction for tax repairs is fully addressed in Section VI.B.2. *infra* and will not be restated here. However, as explained by Ms. Saball, OCA Witness Smith errs in both opposing the Company's treatment of uncertain tax positions and accepting the additional rate base deduction:

> Reducing rate base by assessing higher deferred income taxes assumes the Company received the cash from customers in its collection of income tax expense in cost of service. By eliminated our FIN 48 adjustment, 100% of the benefit of the tax repair deduction will flow-through to customers, thus the Company is not receiving a cash tax benefit to justify the further adjustment to accumulated deferred income taxes in rate base.

AP St. 8-RJ at 4.

For the reasons stated above and in Section VI.B.2. of this Brief, the Company's position should be adopted, and OCA's proposal should be rejected.

F. CONCLUSION AS TO RATE BASE

For the reasons more fully explained above, the Company's final claimed water rate base of $3,812,378,794[14] and claimed wastewater rate base of $$364,300,6563[15] are reasonable and, therefore, should be approved.

---

[14] *See* Appendix F – I Water.

[15] This amount is based upon the sum of the "Pro Forma Present Rates (Revised)" amounts claimed in Table I for each of the wastewater operations divisions. *See* Appendix F.

IV. REVENUES

A. INTRODUCTION REGARDING REVENUES

Aqua PA's updated FPFTY pro forma revenues at present rates are set forth in Schedule B-1 of AP Exhibits 1-A(a) through 1-G(g) as follows:

- AP Exhibit 1-A(a) (Water), Schedule B-1 - $510,006,687;
- AP Exhibit 1-B(b) (Wastewater Base), Schedule B-1 - $19,011,761;
- AP Exhibit 1-C(c) (Limerick), Schedule B-1 - $3,978,573;
- AP Exhibit 1-D(d) (East Bradford), Schedule B-1 - $1,014,569;
- AP Exhibit 1-E(e) (Cheltenham), Schedule B-1 - $7,258,740;
- AP Exhibit 1-F(f) (East Norriton), Schedule B-1 - $2,923,770; and
- AP Exhibit 1-G(g) (New Garden), Schedule B-1 - $2,889,080.

Aqua PA witness Ms. Feeney explained that she prepared the Company's claimed revenues at present and proposed rates along with Aqua PA witness Constance E. Heppenstall. AP St. 2 at 3. The aforementioned schedules are further supported by a billing analysis and bill frequency analysis of the HTY. *See* AP Exhibits 5-A and 5-B. Similarly, Schedule B-2 of AP Exhibits 1-A(a) and 1-B(b) through 1-G(g) display the typical adjustments one would expect to see in the preparation of a utility billing analysis. AP St. 2 at 3.[16] Then, projected customer additions during the FTY and FPFTY were determined on the basis of a three-year historical growth average exclusive of acquisitions. AP St. 2 at 4.

The Company further proposed several adjustments to water and wastewater revenues as explained by Ms. Feeney. *See* AP St. 2 at 4-8. With respect to water operations, adjustments

[16] Ms. Feeney further explained that these adjustments included: (1) Application of Present Rates in effect; (2) Annualization adjustments for DSIC surcharges and newly acquired service areas; (3) Adjustment to add revenue for organic customer growth; (4) Adjustment to revenues for normalization of usage in the residential, commercial and public classes; and (5) Other miscellaneous revenue adjustments including the removal of acquisition revenue not included in this application. AP St. 2 at 3-4.

were made for: "(1) Change in Customers; (2) DSIC Annualization Adjustment; (3) COVID Usage Normalization Adjustment; and (4) Elimination of James Black Water Company ("Belle Aire Acres") and Twin Lakes Water Company." AP St. 2 at 4. Each of these adjustments was identified and explained by Ms. Feeney. AP St. 2 at 4-5. With respect to wastewater operations, adjustments were made for: "(1) Change in Customers; (2) DSIC Annualization Adjustment; (3) Annualization of Acquisition – East Norriton; (4) Annualization of Acquisition – New Garden; and (5) Elimination of North Heidelberg Revenue." AP St. 2 at 4. Each of these adjustments was also identified and further explained by Ms. Feeney. AP St. 2 at 5-8.

Aqua PA also proposed an adjustment for unbilled revenue, and provided a detailed breakdown of this adjustment by customer class. *See* AP St. 2 at 7-8; *see also* Exhibits 1-A through1-G, Schedule B-3. Ms. Feeney explained that:

> This adjustment is made to reflect the fact that Aqua PA records per-book revenues on an accrual basis. This adjustment, consistent with prior practice, eliminates the effect of revenue accrued per books but not billed during the twelve months ended March 31, 2021. Such unbilled revenue is recorded per books pursuant to accepted accrual-accounting procedures to reflect revenues for service rendered but not billed as of the end of an accounting period. Items that produce unbilled revenue include such things as increases in rates and increases in the number of customers. Reflecting such unbilled revenue per books is a normal and correct accounting procedure. In developing pro forma revenues for ratemaking purposes, separate adjustments were made to annualize the revenue effect of such factors as increases in the number of customers and increases in rates that became effective during the historic test year. Therefore, in order to eliminate any duplication of revenue for ratemaking purposes, unbilled revenue accrued per books must be removed.

AP St. 2 at 7-8.

In rebuttal, the Company identified and reflected certain corrections to pro forma revenues at present rates, which are included in the revenue exhibits identified above and are reflected in the tables attached to this Brief as Appendix F. These adjustments include:

- Updated contract rates for certain customers to reflect inflation adjustments, in response to adjustment by OCA. AP St. 2-R at 28.
- Increased water revenues by $150,172 to normalize effect of COVID on miscellaneous revenues, in response to I&E. AP St. 2-R at 30.
- Increase New Garden revenue for late payment charges, per I&E's adjustment. AP St. 2-R at 30-31.

With respect to the Company's claimed revenues at present and proposed rates, the other parties proposed several adjustments. First, I&E proposed adjustments related to the cancellation of certain negotiated contracts that provide for sales for resale of water. Second, OCA proposed adjustments related to the proposed escalation provisions contained in the negotiated water contracts. Third, OCA recommended that the Commission accept only 75% of the Company's proposed COVID adjustment to reduce residential water usage to pre-pandemic levels. Finally, I&E proposed an adjustment to the Company's water revenues related to "forfeited discounts" or "late payment revenue." Each of the proposed adjustments is addressed below.

B. REVENUE ADJUSTMENTS

1. I&E's Proposed Adjustment To Rider DRS Contracts Should Be Rejected.

Aqua PA's current and proposed tariff provides for "Rider DRS – Demand Based Resale Service." *See* Tariff Water No. 3, Original Page 20. "Rider DRS is available to existing or new customers that intend to purchase water from the Company for resale and have a viable competitive alternative to service from the Company." AP St. 2-R at 11. Customers that can satisfy the requirement of Rider DRS can enter into customer-specific contracts at prices designed to maintain sales that would otherwise be lost to water service alternatives. AP St. 2-R at 11. In this regard, Rider DRS provides the Company with incremental revenues streams that otherwise would not be available (AP St. 2-R at 11), which reduce the rates paid by other

customers (AP St. 2-R at 12). Indeed, Aqua PA quantified the benefits of these contracts to the rates paid by other customers as follows:

Chemung County Industrial Development Agency	$8,505
New Wilmington Municipal Authority	$273,246
Warwick Township Water and Sewer Authority	$322,435
Borough of Sharpsville	$291,834
City of Hubbard	$410,445
Horsham Water Authority	$220,541
Schwenksville Borough Authority	$98,194
Masury	$180,729
Bucks County Water and Sewer Authority - Bristol	$9,725
Total Contribution to Fixed Costs	**$ 1,815,655**

AP St. 2-R at 17.

Rider DRS also contains specific limitations on the customers that can qualify for service under it. As explained by Aqua PA witness Ms. Feeney:

> Specifically, Rider DRS requires that the customer:
>
> > (1) enter into a long-term (ten-year) contract;
> >
> > (2) maintain a daily load factor of not less than 0.6;
> >
> > (3) pay not less than the "Minimum Rate," which must be high enough to recover: (a) the Production Cost of Water; (b) all of the fixed costs associated with facilities installed specifically to serve the resale customer; and (c) some portion of the fixed costs of the Company's other facilities; and
> >
> > (4) accept, as part of the Rider DRS contract, an escalation clause providing that the contract rate will automatically escalate at a designated index level or based on changes in the Company's cost of service, as the parties may agree.
>
> Additionally, contracts entered into under Rider DRS must be filed with the Commission. And, while not set forth in Rider DRS, contracts between a public utility and a municipality for service at other than tariff rates must be filed with, and approved by, the Commission under Section 507 of the Public Utility Code.

AP St. 2-R at 11-12. With respect to the requirement that a customer have a competitive alternative, Rider DRS further provides that:

> The Company shall require documentation to establish, to the Company's satisfaction, the existence of a competitive alternative. Such documentation may include, but is not limited to, an affidavit of the customer or, if the customer is a corporation, an affidavit of one or more of its officers.

Tariff Water No. 3, Original Page 20 (emphasis added).

I&E proposed that the Company cancel certain of its existing Rider DRS contracts, and argues that customers served under those contracts have not shown to I&E's satisfaction that they possess competitive alternatives to Aqua PA. *See* I&E St. 4 at 11-12; I&E St. 4-SR at 10-20. Based upon information provided by the Company in its rebuttal case, I&E modified its proposal to recommend that only the Rider DRS contacts between Aqua PA and the Borough of Sharpsville ("Sharpsville") (I&E St. 4-SR at 12), Schwenksville Borough Authority ("Schwenksville") (I&E St. 4-SR at 13), Chemung County Industrial Development Authority ("Chemung") (I&E St. 4-SR at 14), Horsham Water and Sewer Authority ("Horsham") (I&E St. 4-SR at 16), and New Wilmington Municipal Authority ("New Wilmington") (I&E St. 4-SR at 18) be cancelled, and also proposes that until the contract with Aqua Ohio's Masury Division ("Masury") is approved by the Commission that Masury should be billed under full tariff rates (I&E St. 4-SR at 20). I&E's proposal would result in a present rate revenue increase of $3,248,807, which will in turn increase rates for water customers if the contracts are not honored and an alternative source is used. *See* I&E St. 4-SR at 20; I&E Exhibit No. 4-SR, Schedule 1.

In support of its recommendation to cancel these valid contracts, I&E raises three primary arguments. First, I&E asserts that Aqua PA did not provide documentation in its filing of the existence of a competitive alternative, and that this violates the settlement of its 2018 Base Rate Case. I&E St. 4 at 11; *see* I&E St. 4-SR at 9-10. Second, I&E asserts the tariff requires Aqua

PA to perform a "competitive alternatives analysis" to verify customers' statements that they have a competitive alternative. *See* I&E St. 4 at 12.[17] Third, I&E asserts that certain of the documentation provided by Aqua PA to demonstrate a competitive alternative exists is insufficient in I&E's view. *See, e.g.*, I&E St. 4-SR at 11-12. I&E also makes specific arguments and recommendations regarding the contracts with New Wilmington (I&E St. 4-SR at 17-18) and Masury (I&E St. 4-SR at 19-20). Each of the arguments raised by I&E should be rejected.

As an initial matter, Aqua PA submits that I&E's proposal to cancel the identified contracts disregards the basis upon which the parties entered into them and undermines the benefits these contracts provide to other customers. Importantly, "[e]ach entity is different, and having their own facts and circumstances concerning the viability of their current and future water supply needs, and thus, engaging the Company to satisfy those supply needs." AP St. 2-R at 12. These determinations are made <u>at the time the customer</u> enters into the contract and, based upon the customers' evaluations of current and future water supply needs, the customer enters into a long-term contract.[18] Ms. Feeney explained:

> Typically, when dealing with a municipal entity, discussions around water availability or supply are often decided at a point in time and involve decisions about whether to engage an engineer to find water, construct a well or plant, and go through a DEP permitting process. Or the entity may consider the option of purchasing water from the Company at a discounted rate.
>
> At the time of these negotiations, representatives from the municipalities and the Company discuss their alternatives to service and memorialize the decision to procure water from the Company in the contract itself. <u>It is important to emphasize that</u>

[17] As explained by Ms. Feeney, I&E proposed to cancel the contracts with "Chemung, Warwick, Sharpsville and Schwenksville because [I&E witness Cline] asserts that the contracts refer to a claimed competitive alternative but does not provide documentation." AP St. 2-R at 14. In addition, I&E proposed to cancel the contracts with "Horsham, Hubbard, and Downingtown because [I&E witness Cline] notes the Company failed to provide a competitive alternatives analysis, which [I&E witness Cline] claims is required." AP St. 2-R at 14.

[18] All of the contracts are long-term contracts that the Company has included in multiple base rate cases. AP St. 2-R at 14. Moreover, these contracts were the basis for the Company's revenue claims and its final approved rates in more than one prior base rate case. AP St. 2-R at 14.

> these decisions for the municipalities are made at a point in time (e.g., whether to build a water treatment plant or not). Requiring a re-evaluation of this decision 10 or 20 years later likely would have resulted in the municipality either not signing the contract at all or pursuing their alternative source.

AP St. 2-R at 13 (emphasis added). Ms. Feeney also provided an example of the considerations a municipality may make at the point in time it enters into a Rider DRS contract:

> For example, if a municipality, 20 years ago, decided not to build a water treatment plant, and faced with that decision today, would deal with permitting, land use, source of supply, and capital issues and constraints. Again, one could assume that if the municipality was going to be second guessed on their decision ten or twenty years later to **not to build** a treatment plant, it may have reconsidered its initial decision.

AP St. 2-R at 13 (bold and underlined emphasis in original).

I&E ignores the realities of these long-term contracts and seeks to analyze them in a vacuum, divorced from the specific facts and circumstances that existed at the time the contracts were entered into. AP St. 2-R at 13-14. This is particularly relevant when it is recognized that most of the challenged municipal contracts were entered into more than a decade ago. *See* HIGHLY CONFIDENTIAL I&E Ex. No. 4. To require that the Company look-back or revisit the existence of competitive alternatives while the contract is still in place would completely undermine the good faith bargain struck by the parties when they entered into the contract. Specifically, it could likely have affected the agreed-upon term for the contract to reflect that, at some later point, the existence of a competitive alternative could be revisited. However, shortening the contract term may have affected the willingness of the counter-parties to enter into the contracts. For example, if the alternative involved the construction of facilities, such as a treatment plant, the counter-party may have elected to proceed with construction rather than enter into a contract with a short term. None of the contracts, however, contemplate this.

With respect to I&E's unfounded assertion that Aqua PA violated the settlement of its 2018 Base Rate Case, Ms. Feeney explained that the Company "complied with the settlement follow-up from the last base rate case where the Company was directed to contact each of the Company's contract customers and have them demonstrate or identify that they have or had a viable alternative." AP St. 2-R at 12-13; *see also* HIGHLY CONFIDENTIAL AP Exhibit EMF-1-R (providing correspondence between Aqua PA and Rider DRS customers regarding the availability of competitive alternatives). I&E witness Mr. Cline appears to argue that the settlement of the 2018 Base Rate Case revised the plain language of Rider DRS to require the Company to obtain additional documentation to support the existence of a competitive alternative. I&E St. 4-SR at 9-10; *see also* AP St. 2-R at 15-16. However, nothing in that settlement revised the terms of Rider DRS.[19] Rider DRS states that the Company "shall require documentation to establish, to the Company's satisfaction, the existence of a competitive alternative" and that "[s]uch documentation may include, but is not limited to, an affidavit of the customer or, if the customer is a corporation, an affidavit of one or more of its officers." Tariff Water No. 3, Original Page 20. Ms. Feeney further explained that the interpretation of Rider DRS advanced by I&E:

> conveniently ignores key provisions of the Company's Commission-approved Rider DRS. In particular, he fails to discuss: (1) the Company's ability to **review documentation to its satisfaction** when entering into these agreements; (2) the plain language of the Rider DRS approved in the Company's tariff and incorrectly expands the needed documentation to support Rider DRS contracts; and (3) the fact that the additional documentation he claims the Company did not provide is not required to be filed with the Commission as part of the contract filing.

[19] Tariffs that have been approved by the Commission have the force and effect of law. *See* 66 Pa.C.S. § 1303; *see also PPL Elec. Utils. Corp. v. Pa. PUC*, 912 A.2d 386, 402 (Pa. Cmwlth. 2006); *Di Santo v. Dauphin Consol. Water Supply Co.*, 436 A.2d 197, 201 (Pa. Super. 1981).

AP St. 2-R at 15 (emphasis in original). As such, the Company's requirement of documentation from Rider DRS customers "to the Company's satisfaction" of the existence of a competitive alternative is proper.

I&E's further claim that Rider DRS tariff requires Aqua PA to perform a "competitive alternatives analysis" to verify customers' statements that they have a competitive alternative is similarly flawed. Indeed, in his surrebuttal testimony, I&E witness Mr. Cline concedes that Aqua PA "is correct that neither the tariff nor the settlement of the 2018 Aqua base rate case required the Company provide a specific competitive alternative analysis." I&E St. 4-SR at 9; *see also* AP St. 2-R at 15-16.

I&E's third assertion regarding the sufficiency of certain of the documentation provided by Aqua PA to demonstrate a competitive alternative exists should also be rejected.[20] Each of the remaining contracts at issue is discussed below.

a. Sharpsville.

The Company's contract with Sharpsville, entered into in 2008, specifically states that "the Borough has a need for a new source of water supply and has considered alternative means of obtaining that supply, including constructing a new water treatment plant within the Borough." AP St. 2-R at 19; *see also* HIGHLY CONFIDENTIAL I&E Exhibit No. 4 at 153. The contract also provides the estimated cost of this alternative, which was approximately **[BEGIN HIGHLY CONFIDENTIAL]** [redacted] **[END HIGHLY CONFIDENTIAL]**. HIGHLY CONFIDENTIAL I&E Exhibit No. 4 at 153. Moreover, the agreement specifically notes that at the time it was entered into **[BEGIN HIGHLY CONFIDENTIAL]** [redacted] **[END HIGHLY**

[20] As previously noted, in its surrebuttal testimony, I&E proposes that only the contracts between Aqua PA and Borough of Sharpsville (I&E St. 4-SR at 12), Schwenksville (I&E St. 4-SR at 13), Chemung (I&E St. 4-SR at 14), Horsham (I&E St. 4-SR at 16), and New Wilmington (I&E St. 4-SR at 18) be cancelled.

CONFIDENTIAL] which indicates another alternative in existence when the agreement was entered into. HIGHLY CONFIDENTIAL I&E Exhibit No. 4 at 154. The contract provides for a **[BEGIN HIGHLY CONIDENTIAL]** [redacted] **[END HIGHLY CONFIDENTIAL]** term, which demonstrates that the parties contemplated a long-term contract based upon Sharpsville's analysis of its current and future needs at the time the contract was executed. HIGHLY CONFIDENTIAL I&E Exhibit No. 4 at 159-160. Furthermore, I&E does not dispute that if the contract was cancelled, Sharpsville "would be required to pay an additional $1,692,971 per year from present rates if it decided to continue to purchase water from AP" or that it is "likely that it would cease purchasing water from AP, and the Company would lose revenues of approximately $475,000 per year." AP St. 2-R at 19-20.

Aqua PA also provided an affidavit for Sharpsville regarding its competitive alternatives. HIGHLY CONFIDENTIAL AP Exhibit EMF-1-R at 20-21. The affidavit, in part, states:

> **[BEGIN HIGHLY CONFIDENTIAL]**
>
> [redacted]
>
> **[END HIGH CONFIDENTIAL]**

I&E argues this provision **[BEGIN HIGHLY CONFIDENTIAL]** [redacted] **[END HIGH CONFIDENTIAL]** I&E St. 4-SR at 11. However, I&E improperly seeks to disregard the plain language of the contract, which specified the alternative considered, based upon its interpretation of the new affidavit provided in 2021. Further, I&E specifically ignores the words **[BEGIN HIGHLY CONFIDENTIAL]** [redacted] **[END HIGHLY CONFIDENTIAL]** As previously

discussed, the plain language of this affidavit confirms that, at the time the customer entered into the contract, it considered certain alternatives to service from Aqua PA. For these reasons, I&E's proposal to cancel the contract with Sharpsville should be rejected.

b. Schwenksville.

The Company's contract with Schwenksville satisfies the requirements of Rider DRS that a competitive alternative to Aqua PA exist. As Aqua PA witness Ms. Feeney explained:

> Schwenksville is a municipal water utility and has several wells throughout the Schwenksville Borough and Lower Frederick Township, an interconnection with the Company, and a connection with the North Penn Water Authority that it currently uses only for reserve capacity. Schwenksville has competitive alternatives to purchasing water from the Company – from its own water sources and from existing interconnections with other municipalities.

AP St. 2-R at 20. Moreover, the Company provided a signed letter from Schwenksville, which demonstrates **[BEGIN HIGHLY CONFIDENTIAL]** [redacted] **[END HIGHLY CONFIDENTIAL]** *See* AP St. 2-R at 20-21 and HIGHLY CONFIDENTIAL AP Exhibit EMF-1-R at 19; *see also* I&E St. 4-SR at 12. I&E argues that because the latter documentation is a letter, rather than an affidavit, "it does not meet the standard required to be considered valid documentation supporting a competitive alternative." I&E St. 4-SR, at 12. Again, I&E misreads the requirements of Rider DRS. Consistent with Aqua PA's tariff, Schwenksville has provided "documentation to establish, to the Company's satisfaction, the existence of a competitive alternative" that "may include, **but is not limited to**, an affidavit." Tariff Water – Pa. P.U.C. No. 3, Original Page 20 (Emphasis provided). The documentation provided—the original contract and the subsequent letter that is signed by the Executive Director for Schwenksville—satisfy the Company's tariff.

Moreover, I&E does not dispute that if this contract were cancelled, "Schwenksville would be required to pay an additional $265,027 per year from present rates if it decided to continue to purchase water from AP" or that Schwenksville likely "would cease purchasing water from AP, and the Company would lose revenues of approximately $127,000 per year from Schwenksville." AP St. 2-R at 21. For these reasons, I&E's proposal to cancel this contract should be denied.

c. Chemung.

Regarding the contract with Chemung that was entered into in 2009, the contract itself contains a provision stating that Chemung "has considered alternative means of obtaining service" and "following the consideration of other alternatives, Chemung has decided to obtain its water supply from Aqua." AP St. 2-R at 17; HIGHLY CONFIDENTIAL I&E Exhibit No. 4 at 113 of 219. Similarly, the contract provides for a **[BEGIN HIGHLY CONIDENTIAL]** [redacted] **[END HIGHLY CONFIDENTIAL]** term, which demonstrates that the parties contemplated a long-term contract based upon the customers' evaluations of current and future water supply needs at the time the customer entered into it. *See* AP St. 2-R at 12. The contract provides the necessary, contemporaneous "documentation of the existence of a viable competitive alternative to water service" consistent with the requirements of its tariff. Moreover, I&E does not dispute that "Chemung would be required to pay an additional $42,464 per year from present rates if it decided to continue to purchase water from AP." AP St. 2-R at 18. Nor does it dispute that it is more likely that, rather than pay this amount, Chemung "would cease purchasing water from AP, and the Company would lose revenues of approximately $16,149 per year," to the detriment of Aqua PA's other customers. AP St. 2-R at 18. Therefore, I&E's proposal to cancel the contract with Chemung should be rejected.

d. Horsham.

With respect to the Horsham contract, Aqua PA witness Ms. Feeney explained that "Horsham is a municipal water utility that withdraws water from fifteen strategically-located wells throughout Horsham Township and has interconnections with the Company and North Wales." AP St. 2-R at 22. Moreover, "Horsham would be able to supply 100% of its water if needed through those sources." AP St. 2-R at 22-23 (emphasis added). It is clear that Horsham had, and has, competitive alternatives to Aqua PA.

Moreover, I&E does not dispute that "Horsham would be required to pay an additional $123,779 per year from present rates if it decided to continue to purchase water from AP." AP St. 2-R at 18. Nor does it dispute that because Horsham has alternatives, it is more likely that, rather than pay this amount, Horsham "would cease purchasing water from AP, and other customers would be impacted by lost revenues totaling approximately $200,000 per year." AP St. 2-R at 23. Therefore, I&E's proposal to cancel the contract with Horsham should be rejected.

e. New Wilmington.

Aqua PA witness Ms. Feeney explained that the New Wilmington contract was a "wheeling" agreement, designed to get water to an area Aqua PA proposed to serve that was not contiguous to its system. AP St. 2-R at 24. She further explained the basis for this contract, as follows:

> This contract was entered into for the purpose of "wheeling" water to an area AP proposed to serve that was not contiguous with its distribution system. Therefore, it is the Company's position that a competitive alternative is not required for a wheeling agreement. To get water to the proposed service area, AP would provide water to New Wilmington at a designated point of interconnection and then withdraw water elsewhere to serve the new service territory. As originally conceived, this contract would have maintained an approximate balance between volumes sold by AP to New Wilmington at one point in the New Wilmington system, and volumes withdrawn from another point on the New Wilmington

> system, such that the costs of purchases and withdrawals would have mostly offset. However, the increases in usage for AP's anticipated new service area did not materialize. Nonetheless, New Wilmington continued to make incremental purchases of water from AP under the contract – sales that, otherwise, AP would not be making.

AP St. 2-R at 24. Although it is the Company's position that a wheeling agreement does not require a competitive alternative, it is important to recognize that the incremental revenues provided by this contract are reducing the rates Aqua PA's other customers would pay in the absence of the agreement. As explained by Ms. Feeney, cancellation of this contract would most likely result in the loss of approximately $328,000 per year. AP St. 2-R at 24. Moreover, the contract has enabled Aqua PA to provide service to a noncontiguous area at low cost. **[BEGIN HIGHLY CONIDENTIAL]** [redacted] **[END HIGHLY CONFIDENTIAL]** I&E HIGHLY CONFIDENTIAL Ex. 4, at 122. Therefore, in order to maintain these benefits to Aqua PA's other customers, I&E's proposal to cancel the contract with New Wilmington should be rejected.

f. Masury.

Aqua currently provides water to Aqua Ohio's Masury Division under a special tariff rate.[21] Aqua PA and Masury have negotiated a new contract under Rate DRS. This agreement was filed with the Commission on November 30, 2021. AP St. 2-R at 25; *see* HIGHLY CONFIDENTIAL AP Exhibit EMF-1-R at 23-38. Importantly, this contract contains a competitive alternative analysis (HIGHLY CONFIDENTIAL AP Exhibit EMF-1-R at 34-37) as well as a sworn affidavit indicating Masury would select the competitive alternative in the absence of the contract. (HIGHLY CONFIDENTIAL AP Exhibit EMF-1-R at 38). The new

[21] *See* Tariff Water – Pa. P.U.C. No. 2, Third Revised Page 12.4.

contract provides for an increase above the current rates charged to Masury.[22] I&E argues that until such time as the contract is approved, Masury should be billed under non-discounted tariffed rates. Such a proposal is unreasonable. I&E proposes to impute over $1 Million in revenues from Maury, despite the fact that the competitive analysis supports a rate that would produce $258,000 in revenues. I&E Exhibit 4-SR, Schedule 1. If the assumption is that the Commission will not approve the new contract with Masury, then zero revenues should be imputed from Masury, as the sworn affidavit from Maury states that it would select the competitive alternative in the absence of a contract. I&E's proposed rates for Masury should be rejected.

In summary, none of the arguments advanced by I&E justify cancelling the Rider DRS contracts that provide "absolute benefit to the Company's existing customers and the rates they are charged." AP St. 2-R at 16. I&E's attempts to analyze these contracts in a vacuum divorced from the parties' evaluation of current and future water supply needs at the time the contracts were executed would also fundamentally undermine the purpose of these contracts and the parties' good faith arrangement. Moreover, in each instance, Aqua PA has secured documentation to its satisfaction that shows these customers have competitive alternatives, consistent with its tariff. For these reasons, I&E's proposal to cancel the contacts between Aqua PA and Sharpsville, Schwenksville, Chemung, Horsham, New Wilmington and Masury should be rejected.

[22] The current tariff rate is $1.94158 per thousand gallons. Supplement No. 11 to Aqua PA Tariff Water-PA PUC No. 2, Original page 12.4. The initial contract rate is $2.32 per thousand gallons. AP Exhibit 5-A, Appendix A, RS2, p. 8. The FPFTY rate is projected to be $2.359 per thousand gallons. AP St. 2-R at 29.

2. OCA's Proposed Adjustment To The Escalation Provisions Of Certain Negotiated Water Contracts Should Be Denied.

As a part of its direct testimony, OCA proposed an adjustment to the Company's water revenues associated with negotiated rate contracts for sales for resale and for end-use Industrial and Public Authority customers. OCA St. 4 at 22. OCA witness Mr. Watkins testified certain of the contracts contain annual rate escalation provisions and, therefore, an adjustment to current revenues is appropriate to reflect the contractual escalation rates through March 31, 2023. OCA St. 4 at 23; *see also* HIGHLY CONFIDENTIAL Schedule GAW-9. Mr. Watkins proposed an adjustment to reflect contractual escalation that increases water utility revenue for the FPFTY by $301,307. OCA St. 4 at 23.

The Company disagreed with Mr. Watkins' adjustment as proposed, because it uses "inflation factors not consistent with the inflation escalation clauses in the respective contracts." AP St. 2-R at 28. Moreover, OCA witness Mr. Watkins "incorrectly applied inflation to the customer charges as the customer charges are applicable to the tariff rates." AP St. 2-R at 28. Specifically, Aqua PA witness Ms. Heppenstall explained that "Mr. Watkins assumes a higher and incorrect rate of CPI," and that AP Exhibit 5R-A shows the rates the Company is assuming as of the end of the FPFTY based on the increases permitted in the contracts. AP St. 5-R at 16. The Company provided updated inflation factors for the identified customers as follows:

BOROUGH OF SHARPESVILLE

Effective Date of Rate	Usage Rate	Rate Increase
11/25/2021	$ 0.249	2.63%
11/25/2022	$ 0.253	1.70%

HUBBARD

Effective Date of Rate	Usage Rate	Rate Increase
11/1/2021	$ 0.235	0.95%
11/1/2022	$ 0.239	1.70%

SCHWENKSVILLE BOROUGH

Effective Date of Rate	Usage Rate	Rate Increase
3/1/2022	0 $ 0.392	1.75%
3/1/2023	0 $ 0.399	1.70%

MASURY

Effective Date of Rate	Usage Rate	Rate Increase
1/2/2022	0 $ 2.320	
1/2/2023	0 $ 2.359	1.70%

MT. CARMEL

Effective Date of Rate	Usage Rate	Rate Increase
5/21/2021	$ 0.314	1.95%
5/21/2022	$ 0.320	1.91%

COVANTA

Effective Date of Rate	Usage Rate	Rate Increase
1/1/2021	$ 0.339	3.10%
1/1/2022	$ 0.352	3.75%
1/1/2023	$ 0.365	3.70%

LIBERTY POWER

Effective Date of Rate	Monthly Charge	Usage Rate	Rate Increase
1/1/2021	$ 95,487	$ 0.099	0.78%
1/1/2022	$ 97,158	$ 0.100	1.75%
1/1/2023	$ 98,809	$ 0.101	1.70%

AP St. 2-R at 28.

In surrebuttal, OCA Witness Watkins agreed that customer charges, in general, are not subject to escalation clause provisions. OCA St. 4-SR at 9. However, he continues to propose higher increases to usage charges, based upon his adoption of higher inflation rates. Mr. Watkins' proposed changes continue to be overstated and should be rejected. First, as can be seen on his HIGHLY CONFIDENTIAL Sch. GAW-2SR, he has included forecasted inflation rates for 2023 in his calculations. However, this rate case is based upon a FPFTY ending March 31, 2023, and 2023 inflation rates will not affect most of the contract rates shown above. In

addition, the Company's projection of inflation adjustments is based upon the GDP Chained Price Index known at the time this case was filed, and that was used to calculate the General Price Level adjustment used for expense purposes. *See* AP Exhibit 1-A(a), Schedule C-4.1.i. As a matter of consistency, the inflation factor used to adjust certain revenues should be the same as the inflation factor used to adjust certain expenses. For these reasons, OCA's proposed adjustment to revenues associated with industrial and public authority contracts should be denied.

3. Metered Residential Sales Adjustment.

While it is not the Company's position that it can be said with any certainty that the pandemic is over, the Company proposed an adjustment to water consumption related to the COVID-19 pandemic. AP St. 5 at 17; *see* AP Exhibit 5-A, Part II, Schedule 6. Rather than assume that consumption by class in the future will be similar to usage patterns during the pandemic (*i.e.*, the HTY), the Company instead projected consumption by class to be similar to usage patterns in its prior 2018 Base Rate Case. AP St. 5 at 17. As such, it proposed an adjustment to residential, commercial and public customer classes based on the average usage presented in the pro forma fully projected future test year used in the 2018 Base Rate Case. AP St. 5 at 17. The adjustment reduced residential water usage, and sales revenue by $11.03 million, and increased Commercial and Public Authority water usage, and sales revenue by $10.96 million. The total overall change in revenue under present rates using this adjustment was a decrease in total water revenues of $64,639. AP St. 5 at 17.

OCA accepted the Company's proposed adjustment for commercial and public customers, but proposed that only 75% of the adjustment applicable to residential customers should be applied. OCA St. 1 at 37-38. This adjustment increased residential revenue from metered water sales by $2.757 million. OCA St. 1 at 36; OCA Exhibit LA-2, Schedule C-6.

OCA witness Mr. Smith asserts that residential water usage increased in 2020 and, therefore, it is unreasonable to reduce HTY metered residential water sales by the amount proposed by the Company. OCA St. 1 at 36-37. He further claims Aqua PA's presumption that none of the 6.4% year-over-year increase in residential metered water sales would continue beyond 2020 and into the FPFTY "does not seem realistic." OCA St. 1 at 37.

Aqua PA rebutted these arguments and demonstrated its proposed adjustment to water consumption due to the COVID-19 pandemic is reasonable. As an initial matter, OCA's proposed acceptance of this adjustment for commercial and public customers, but not for residential customers, is inconsistent. AP St. 5-R at 18. As explained by Aqua PA witness Ms. Heppenstall, if individuals are staying home and using more water than pre-pandemic, it should follow that usage for commercial and public classes should also be lower than pre-pandemic levels. AP St. 5-R at 18. However, the most recent usage data the Company has demonstrates this is not the case and, in fact, demonstrates that usage is moving toward pre-pandemic levels as depicted below.

	Oct-20	Oct-21	Change	Percentage Change
Residential	1,636,326	1,545,471	(90,855)	-5.6%
Commercial	805,189	877,755	72,566	9.0%
Public	43,714	58,915	15,201	34.8%
	2,485,230	2,482,141	(3,089)	-0.1%

	Sep-20	Sep-21	Change	Percentage Change
Residential	1,706,364	1,636,859	(69,505)	-4.1%
Commercial	870,301	935,491	65,190	7.5%
Public	54,027	59,981	5,954	11.0%
	2,630,691	2,632,331	1,639	0.1%

AP St. 5-R at 19. Based on this information, the Company is experiencing between a 4-5% <u>decrease</u> in residential usage and <u>increases</u> in both commercial and public usage. Ms.

Heppenstall further explained that Mr. Smith provided no empirical evidence to support how he chose 75% for purposes of the residential metered sales adjustment. AP St. 5-R at 19.

In surrebuttal, OCA witness Smith responded to the Company's data by arguing that October 2021 residential usage is higher than pre-pandemic, 2019 usage. OCA St. 1-SR, at 28. This, Mr. Smith argues, demonstrates his adjustment is likely conservative. OCA St. 1-SR, at 28. However, Mr. Smith fails to fully understand the data he provided. As can be seen from his chart on page 28 of his surrebuttal testimony, residential usage for both the months of September 2021 and October 2021, have trended downward substantially from the pandemic months of September 2020 and October 2020. At the declining usage rate shown from his data, residential usage in the **FPFTY** will be returning to pre-pandemic levels as projected by the Company.

OCA's proposed adjustment is arbitrary, inconsistent and not supported by the record, and should be rejected.

4. Forfeited Discounts / Late Payments.

I&E recommended adjustments to water and wastewater forfeited discounts ("late payment revenue"), respectively. I&E witness Mr. Cline recommends that the Company's water revenues under present revenues be increased to reflect $1,373,542 in late payment revenue. I&E St. 4 at 7. I&E Witness Mr. Kubas also recommends that the Company's wastewater revenues for its New Garden system under present rates be increased to reflect $17,832 in late payment revenue. I&E St. 5 at 60.

With respect to I&E's proposed adjustment related to late payment revenue, the Company initially noted that I&E witness Mr. Cline was "incorrectly pointing to all miscellaneous revenue of the Company and not specifically the late payment charges." AP St. 2-R at 29. In addition, contrary to I&E's claim that "it is not reasonable to expect that Aqua PA will experience zero dollars in [late payment revenue] in the FPFTY, as the moratorium on late

payment fees ended on September 30, 2021," I&E St. 4 at 7, while there was a moratorium on terminations, there was not a moratorium imposed on late payment fees. AP St. 2-R at 30.

Aqua PA witness Ms. Feeney also explained that I&E's recommendation as proposed should be rejected because in its response to "filing requirement OR,6 for Water, the Company recorded other miscellaneous revenues totaling $1,301,938 on its books for the historic test year ended March 31, 2021 which are therefore included in the FPFTY claim." AP St. 2-R at 29. Of this amount, "$735,710 was attributable to late payment revenues in the HTY." AP St. 2-R at 29. Thus, I&E's claim that the Company did not include late payment revenues for the FTY and FPFTY is incorrect. However, in reviewing I&E's proposed recommendation, the Company did make an adjustment to increase FPFTY Miscellaneous revenues by $150,172 to normalize the impact of COVID on miscellaneous revenues. AP St. 2-R at 30; *see also* AP Exhibit 1-A(a), Schedule B-8. In surrebuttal, I&E accepted the Company's adjustment, and withdrew its recommended $1.3 million adjustment. I&E St. 4-SR, at 3-4.

I&E further recommends that the Company's water late payment revenue claim under proposed rates be increased by the same percent as the overall increase granted by the Commission. I&E St. 1 at 8. This adjustment is not necessary as the Company has already reflected late payment revenues, as explained above. I&E's proposed adjustment would, therefore, result in improper double counting of late payment revenues. AP St. 2-R at 30.

With respect to I&E's further proposal that the Company increase late payment revenues associated with the New Garden wastewater system, the Company agreed to accept this claim as a part of its rebuttal testimony. AP St. 2-R at 31. As explained by Ms. Feeney:

> The New Garden system was acquired in December 2020 and there was no late payment revenue recognized in the HTY. As indicated in the Company's response to I&E-RS-30-D-WW, the Company received $8,691 in late payment revenue between April and

> September of 2021. Mr. Kubas took the monthly average of $1,448.50 for April through September and annualized the revenue to reflect a full twelve months.

AP St. 2-R at 30. Given the limited historical billing information associated with this system, Mr. Kubas's proposal to calculate the monthly average for the April through September period and then annualize it to reflect a full year is reasonable and has been reflected in the Company's final claim in this proceeding. As indicated previously, this adjustment is included in the Company's final revenue requirement exhibits and the tables attached to this Brief.

C. CONCLUSION AS TO REVENUES

For the reasons more fully explained above, the Company's water and wastewater revenues rates for the FPFTY are reasonable and, therefore, should be approved.

V. EXPENSES

A. INTRODUCTION REGARDING EXPENSES

As part of the proceeding, the Company has proposed to include a broad range of expenses that are incurred in order to provide service to its customers. The full range of these expenses are reflected in the Company's initial filing in AP Exhibit 1-A, Schedules C-1 through C-10.2 and Schedules D-1 through D-2.5 for its water operations, AP Exhibit 1-B, Schedules C-1 through C-9.1 and Schedules D-1 through D-2.4 for its wastewater base operations, and AP Exhibits 1-C through 1-G, Schedules C-1 through C-8.1 and Schedules D-1 through D-2.4. A subset of the expenses included in the Company's original filing have been challenged by I&E and OCA, and are described in this Section of the Company's brief.

In *Butler Township Water Co. v. Pa. PUC*, 473 A.2d 219, 221 (Pa. Cmwlth. 1984) ("*Butler Township*"), the Commonwealth Court concluded:

> The general rule is that a public utility is entitled to recover in rates those expenses reasonably necessary to provide service to its customers and to earn a fair rate of return on the investment and

> plant used and useful in providing service. *Western Pennsylvania Water Co. v. Pennsylvania Public Utility Commission*, 54 Pa. Cmwlth. Ct. 187, 422 A.2d 906 (1980). Operating expenses include prudently incurred rate case expenses. *Driscoll v. Edison Light and Power Company*, 307 U.S. 104 (1939); *West Ohio Gas Company v. Public Utility Commission of Ohio*, 294 U.S. 63 (1935). Obviously, the refusal to allow the recovery of a proper expense diminishes to the same extent the utility's return on investment. There is no evidence in the record that the … expenses claimed here were unreasonable, imprudently incurred or excessive in amount.

See also T.W. Phillips Gas and Oil Co. v. Pa. PUC, 474 A.2d 355 (Pa. Cmwlth. 1984). As the Commonwealth Court determined in *Butler Township*, the relevant question in a base rate proceeding is whether the expense is reasonable and appropriate for the furnishing of service to customers. As the Company will show herein, the expenses it has included in this proceeding are reasonable and appropriate in order to provide service to its customers. Therefore, its expense claims should be approved.

B. PHOENIXVILLE ACQUISITION – AMORTIZATION EXPENSE ADJUSTMENT

The Company's claim in this proceeding includes a claim for amortization expense associated with the positive acquisition adjustment to rate base for the Phoenixville water system acquisition. AP Exhibit 1-A, Schedule C-5.1. Associated with their opposition to the Company's claim for a positive acquisition adjustment to rate base, OCA and I&E also proposed a related adjustment to amortization expense. Both I&E and OCA argue that $121,865 of amortization expense associated with this acquisition should be disallowed, for the same reasons they assert the positive acquisition adjustment should be disallowed. I&E St. 3 at 11; OCA St. 1 at 30 (citing DeAngelo direct testimony).

The Company believes that these adjustments are in error, because the Company's proposed rate treatment is consistent with Section 1327(a)(9) of the Public Utility Code, 66

Pa.C.S. § 1327(a)(9). AP St. 2-R at 33. This issue of the positive acquisition adjustment to rate base associated with the Phoenixville acquisition is fully addressed in Section III.C. *supra* and will not be restated here. For those same reasons, the other parties' proposed adjustments to amortization expense should also be denied.

C. GENERAL PRICE LEVEL ADJUSTMENT

The Company's filing reflects a "General Price Level Adjustment" that reflects the anticipated effect of inflation on operating expenses that were not specifically adjusted in this case. AP St. 3 at 2; AP Exhibits 1-A and 1-B through 1-G, Schedule C-4.1. Aqua PA witness Mr. Christopher E. Manning explained the derivation of this adjustment as follows:

> The future test year ending March 31, 2022 ("FTY") adjustment is derived from the total pro forma historic test year ended March 31, 2021 ("HTY") operating expenses, less the amounts specifically adjusted in this filing or not otherwise subject to inflation. The remaining amount which is subject to the effect of inflation is then multiplied by the average GDP chained price index forecast from the second quarter of 2021 through the first quarter of 2022 to arrive at the inflationary increase amount for the twelve months ending March 31, 2022. The fully projected future test year ending March 31, 2023 ("FPFTY") adjustment in the above-referenced Exhibits is derived from the total pro forma FTY operating expenses, less the amounts specifically adjusted in this filing or not otherwise subject to inflation. The remaining amount which is subject to the effect of inflation is then multiplied by the average GDP chained price index forecast from the second quarter of 2022 through the first quarter of 2023 to arrive at the inflationary increase amount for the twelve months ending March 31, 2023.

AP St. 3 at 2.

The Company derived its inflation factors based upon the quarterly CPI percentage change from the same quarter in the prior year set forth in the October 10, 2020, Blue Chip Economic Indicators. AP St. 3 at 3. However, "[s]ince the forecast is not available for the quarters in the FPFTY, the Company uses the last available forecasted quarterly percentage change and uses that as the annual rate to multiply inflation eligible expenses." AP St. 3 at 3.

Consistent with prior precedent, Aqua PA presented evidence that its General Price Level Adjustment is less than the historic cost increases it has experienced for a limited group of expenses and is relatively conservative. Despite this, OCA opposed the Company's General Price Level Adjustment. OCA witness Mr. Smith argued that the adjustment is a blanket inflation adjustment, which does not utilize a targeted approach and characterizes the adjustment as a "blanket" adjustment. OCA St. 1 at 34-35. While Mr. Smith cited older cases where the Commission disallowed blanket generalized inflation adjustments, he also acknowledged a more recent case where the Commission did allow an inflation adjustment. OCA St. 1 at 35.

Contrary to OCA's assertions, the Company's General Price Level Adjustment is reasonable and should be approved. As an initial matter, this adjustment is not a blanket adjustment as OCA characterized. Rather, "The Company's adjustment reflects the anticipated effect of inflation only on operating expenses that were not specifically adjusted in this case or not subject to inflation (*i.e.*, lease expense)." AP St. 3-R at 2-3. Indeed, Mr. Manning demonstrated that "[t]he remaining operating expenses subject to inflation make <u>up less than 22%</u> of total operating expenses." AP St. 3-R at 3 (emphasis added).

In addition, this adjustment is made consistent with the method the Company has used to adjust expenses not otherwise specifically adjusted in prior cases dating back over 25 years. AP St. 3-R at 3. Mr. Manning further testified that "the Company is not aware of any case in the past decades where there was any prior disagreement with this adjustment being made by the Company, both before and after the use of fully projected future test year was utilized." AP St. 3-R at 4.

OCA Witness Smith's reference to prior Commission precedent is outdated and inaccurate. The inflation adjustment criticized in *Pa. PUC v. Philadelphia Gas Works*, Docket

Nos. R-0061931, et al., 2007 Pa. PUC LEXIS 45 (Order entered Sept. 28, 2007), cited by Mr. Smith testimony, concerned the use of a five-year planning period to project all expenses, including the use of an inflation factor. *Id*. at 23-27. Further, in *Pa. PUC v. Philadelphia Electric Company*, Docket No. R-822291, et al., 1983 Pa. PUC LEXIS 9 (Order dated Nov. 22, 1983), the Commission did not reject the use of an inflation adjustment. Rather, the Commission disagreed with the Company's projected 8% inflation factor applied to certain expenses and adopted a 5% inflation factor, based upon the gross national product ("GNP") price deflator. *Id*., at *73-77. In the third case cited by Mr. Smith, *Pa. PUC v. PECO*, Docket No. R-891364, et al., 1990 Pa. PUC LEXIS 155 (Order dated May 16, 1990), the issue of inflation arose with respect to a rate base claim for Materials and Supplies inventory. *Id.* at *130.

Decisions of this Commission have consistently accepted general price adjustment factors applied to expenses not separately adjusted, where the utility has demonstrated the adjustments are adequately supported and relatively conservative. *See, e.g.*, *Pa. PUC v. Philadelphia Suburban Water Company*, Docket Nos. R-00016750, 2002 Pa. PUC LEXIS 55, at *53-55 (Order entered July 8, 2002) ("*PSW 2002*") (accepting Philadelphia's Suburban's proposed general inflation adjustment, as modified and revised, and explaining the Commission has "consistently accepted inflation adjustments where supported by historic data demonstrating that the utility has experienced cost increases that exceed the claimed inflation increases.");[23] *Pa. PUC v. United Water Pennsylvania, Inc.*, Docket Nos. R-00973947, et al., 1998 Pa. PUC LEXIS 6, at *29-32 (Order entered Jan. 30, 1998) ("*UPWA 1998*") (accepting utility's proposed "2.2% Gross Domestic Product (GDP) inflation factor to those operating expenses which it did not otherwise adjust" and acknowledging this factor was a "relatively conservative one."); *Pa. PUC*

[23] Per *PSW 2002*, the same method used by the Company in this proceeding was previously approved by the Commission. *See PSW 2002*, at *47 (explaining the utility's inflation factor was based on Blue Chip Forecast for the Gross Domestic Product Chained Price Index).

v. Columbia Gas of Pennsylvania, Inc., Docket Nos. R-891468, et al., 1990 Pa. PUC LEXIS 162, at *37-44 (Order dated Sept. 20, 1990) ("*CPA 1990*"); *Pa. PUC v. Pennsylvania-American Water Company*, Docket Nos. R-880916, et al., 1988 Pa. PUC LEXIS, at *53-56 (Order dated Oct. 21, 1998) ("*PAWC 1988*") (accepting utility's proposed 2.6% general price escalation factor (*i.e.*, a composite of the CPI, PPI, and GNP) to all historic test year expenses not separately adjusted to derive future test year expenses).

Notably, in *PSW 2002* the Commission affirmed an administrative law judge's rejection of the same arguments advanced by the OCA in this proceeding. In that proceeding, the OCA argued that the general price level adjustment should be rejected in its entirety because it was "not known and measurable." *PSW 2002*, at *48; *see also* OCA St. 1 at 35 (arguing Aqua PA's proposed adjustment is too speculative). The Commission explained that:

> On this issue, the ALJ stated <u>that there is no question but that the OCA's proposal must be rejected</u>. (R.D., p. 37).
>
> The ALJ noted that there are numerous cases in which the Commission has accepted this type of adjustment.

PSW 2002, at *49 (emphasis added). The Commission reaffirmed the administrative law judge's conclusion in its order, where it stated:

> The OCA argues that an inflation adjustment is an issue in flux before the Commission. <u>That is not accurate.</u> Since the Commonwealth Court's decision in National Fuel Gas Distribution Corporation v. Pa. PUC, 677 A.2d 861 (Pa. Cmwlth. 1986), we have consistently accepted inflation adjustments where supported by historic data demonstrating that the utility has experienced cost increases that exceed the claimed inflation increases.

PSW 2002, at *55. This statement is further borne out by the Commission's prior decisions in *UPWA 1998*, *CPA 1990*, and *PAWC 1988*, as well as this adjustment being accepted as a part of Aqua PA's last fully litigated base rate proceeding. AP St. 3-R at 4; *see also Pa. PUC v. Aqua Pa., Inc.*, Docket No. R-00072711, 2008 Pa. PUC LEXIS 50, at *26-29 (Order dated July 17,

2008) ("*Aqua 2008*") (explaining that Aqua PA's general price level adjustment was accepted, but modified based on additional evidence related to Aqua PA's purchased water expense from the Bucks County Water and Sewer Authority).

Consistent with this precedent, Aqua PA has presented compelling evidence that its General Price Level Adjustment is less than the historic cost increases it has experienced and is relatively conservative. Aqua PA witness Mr. Manning testified that the expenses subject to this adjustment are directly affected by inflation and that "[t]he expenses that the Company is requesting be increased under this general inflation adjustment have all historically grown at rates that far exceed the requested inflation factor that the Company is applying to them, which is 1.75% in the FTY and 1.70% in the FPFTY." AP St. 3-R at 3. He went on to provide specific examples related to expense categories subject to this adjustment as follows:

> Supplies expense, which falls under this adjustment, has grown at an average rate of 8.19% over the last three years. Lab Testing expenses, which also fall under this adjustment, have grown at an average rate of 11.13% over the last three years. Outside accounting expenses, also under this adjustment, have grown at an average rate of 3.38% over the last three years as well.

AP St. 3-R at 3-4. In each case, Aqua PA's proposed General Price Level Adjustment utilizes an inflation factor well below the historical cost increases the Company has experienced.

Mr. Manning further explained that OCA's assertion that the adjustment is speculative "does not take into consideration any historical data, nor does it take into account present economic conditions." AP St. 3-R at 4. The macro conditions in which the world is currently operating support the Company's position that the inflation factor proposed by the Company is conservative, surpassed by both actual inflation rates experienced in the latter months of 2021 and more recent projected inflation rates. AP St. 3-R at 4. Other Aqua PA witnesses have specifically addressed the rising projections of inflation, which affect the Company's revenue

requirement. *See* Aqua PA St. 1-R at 5-6 (explaining that "the [inflation] factor is higher today than it was just six months ago, and the Company expects the factor to be sustained well into 2022" but that the Company was maintaining its proposed 1.70% inflation factor); AP St. 7-R at 6 (identifying economic indicators that inflation rates are expected to rise). Despite these recent increases in inflation rates, the Company did not seek to update the inflation factor used for its General Price Level Adjustment. AP St. 3-R at 5.

For these reasons, and the reasons more fully explained in Aqua PA's testimony, the Company's proposed General Price Level Adjustment and associated Inflation Factor are reasonable, consistent with Commission precedent and conservative in light of historical cost increases and prevailing economic conditions. Therefore, the General Price Level Adjustment should be accepted without modification.

D. EMPLOYEE EXPENSES

1. Payroll Expense.

The Company's claim for payroll expense was developed in AP Exhibit 2 of the initial filing. *See also* AP St. 2 at 10; AP Exhibits 1-A and 1-B through 1-G, Schedule C-4.5. Aqua PA's proposed adjustment to payroll expense reflects "known or anticipated changes to the Company's union and non-union employees at the end of the FPFTY." AP St. 2 at 10. With respect to water operations, the Company's FTY and FPFTY payroll expense is approximately $35.8 million and $36.8 million, respectively. AP St. 2 at 10.[24] Regarding wastewater operations, the Company's total FTY and FPFTY payroll expense is approximately $3.0 million for each period. AP St. 2 at 10.

These costs were calculated using the salaries and wages associated with the Company's current complement of authorized positions, adjusted to reflect known or projected changes in

[24] AP Exhibit 1-A, Schedule C-4.5 (sum of lines 5 and 12 at FTY and FPFTY).

compensation. AP St. 2 at 10. Aqua PA witness Ms. Feeney explained how increases in salaries and wages were determined for non-union and union payroll employees as follows:

> Exhibits 1-A & 1-B Non-Union Payroll – Employees are granted individual salary increases through an annual performance review. The water non-union gross payroll, at FTY and FPFTY salary levels, was determined to be $20,868,401 and $21,495,994, respectively. The wastewater non-union gross payroll, at FTY and FPFTY salary levels, was determined to be $1,764,660 and $1,817,730 respectively. In deriving these claims, I first started with employees' April 1, 2021 actual labor rates and annualized expenses at those rates. In addition, for the FPFTY, I anticipated an additional merit pay increase for all employees, which was also annualized. The assumed percentage increases are included in Schedule 4 of Exhibit 2. The Company's labor claims also include cash short-term incentive compensation for eligible employees. To the extent that an employee's base pay was increased as I described earlier, a commensurate adjustment in the amount of eligible incentive pay would follow accordingly at the same percentage levels.
>
> Exhibit 1-A & 1-B Union Payroll – Aqua PA has seven different unions, each with its own collective bargaining agreements and anniversary dates that changes in hourly rates will become effective. The water gross union payroll, at the FTY and FPFTY levels, was determined to be $31,015,348 and $31,871,426 respectively. The wastewater union gross payroll, at FTY and FPFTY wage levels, was determined to be $1,445,933 and $1,485,843 respectively. The Company's claims were developed to annualize the actual pay rates effective for each union in both the FTY and FPFTY as of March 31, 2023. Further details regarding contractual increase percentages are provided in Exhibit 2 – Payroll.

AP St. 2 at 10-11. Ms. Feeney further explained that the gross payroll amounts in AP Exhibits 1-A through 1-G (*i.e.*, at Schedule C-4.5, Lines 2 and 8) "reflect a reasonable vacancy adjustment that is in line with the Company's actual experience." AP St. 2 at 11. Gross payroll is further adjusted (reduced) by capitalized labor (*i.e.*, at Schedule C-4.5, Lines 3 and 9) and non-operating labor (*i.e.*, at Schedule C-4.5, Lines 4 and 10) as experienced in the HTY and applied to the FTY and FPFTY to arrive at the claimed labor expense. AP St. 2 at 11.

Both I&E and OCA proposed adjustments to the Company's claim for payroll expense. I&E proposed the use of a vacancy rate percentage of 6.83%. I&E St. 1 at 23-24. I&E witness Ms. Wilson asserts that this rate is representative of the 559 actual full time ("FT") employees in the HTY as of March 31, 2021 carried forward into the FPFTY and the 600 budgeted full-time positions claimed in the FPFTY, resulting in 41 vacancies (*i.e.*, 41 / 600 = 6.83%). Ms. Wilson then multiplied this percentage by the claimed labor expense for each division, except for East Bradford due to this division having a very low expense. I&E St. 1 at 24-25.

OCA's proposed adjustment is based upon a vacancy rate of 2.88%, rather than the Company's claimed rate of 2.50%. OCA St. 1 at 41 (citing response to I&E-RE-22-D). Mr. Smith states that the 2.88% vacancy rate is based on the difference between actual regular hours and authorized regular hours during the HTY. OCA St. 1 at 41-42.

The Company opposed the 6.83% full time vacancy rate adjustment proposed by I&E, but accepted the 2.88% full time vacancy rate proposed by OCA. AP St. 2-R at 37. Aqua PA witness Ms. Feeney explained that I&E's adjustment does not "take into account the vacancy credit that the Company has already reflected in its FTY and FPFTY claim." AP St. 2-R at 37. As such, I&E's proposed vacancy double counts the adjustment already built into the Company's claim as a part of the gross payroll amounts. AP St. 2-R at 37; *see also* AP St. 2 at 11. Ms. Feeney provided additional reasons as to why the proposed 6.83% vacancy rate proposed by I&E was incorrect. AP St. 2-R at 37-38.

Based upon this testimony, I&E withdrew its adjustment for payroll expense. I&E St. 1-SR at 25. As such, the Company's vacancy rate for proposed payroll expense has been updated to 2.88%. *See* AP Exhibits 1-A(a) and 1-B(b) through 1-G(g), Schedule C-4.5.

OCA also proposed a further adjustment to reduce the number of seasonal positions included in the Company's claim to reflect the level as of June 30, 2021. OCA St. 1 at 43-44.[25] Mr. Smith argued it was reasonable to reduce the payroll expense for this category from 33 to 11 positions based on the most current actual data. OCA St. 1 at 43-44.

Aqua PA demonstrated that OCA's adjustment to seasonal positions should be rejected. Specifically, Ms. Feeney explained that the discovery response relied upon by Mr. Smith inadvertently omitted the number of seasonal employees in 2019, but that an updated response showed 31 seasonal employees had been hired during that period. AP St. 2-R at 38-39. Furthermore, Ms. Feeney explained that the 2020 data was "an outlier due to the restrictions and safety concerns related to COVID." AP St. 2-R at 39. Similarly, 2021 data was also impacted by COVID. AP St. 2-R at 39. However, the Company fully anticipates filling all seasonal positions during the FPFTY based upon anticipated normal operating conditions during that time.[26] AP St. 2-R at 39.

For these reasons, the Company's updated payroll expense claim utilizing a vacancy adjustment of 2.88% as reflected in AP Exhibits 1-A(a) and 1-B(b) through 1-G(g) should be accepted, and OCA's further adjustment to disallow the cost of 22 seasonal positions should be rejected.

2. Employee Benefits Expense.

Both I&E and OCA proposed adjustments to the Company's claimed employee benefits expense, based upon their proposed vacancy adjustments. I&E St. 1 at 27; OCA St. 1 at 51. For the same reasons discussed above, the Company has accepted OCA's proposed 2.88% vacancy rate and updated its claim for employee benefits accordingly. AP St. 2-R at 39-40. Therefore,

[25] OCA did not apply its proposed vacancy rate to non-union seasonal employees. OCA St. 1 at 42.

[26] As explained in other portions of this Brief, the Company has made various adjustment to revenues and expenses to normalize the effects of COVID-19 on historic data. *See, e.g.*, Section VI.C.3.

the updated claim for employee benefits expense set forth in AP Exhibits 1-A(a) through 1-G(g) should be adopted.

3. Stock-Based Incentive Compensation.

OCA proposes to selectively disallow a portion of Aqua PA's incentive compensation for the FPFTY. Specifically, OCA proposes to disallow all stock-based incentive compensation, totaling $780,493 for water operations and $66,000 for wastewater operations. OCA St. 1 at 45. OCA's witness asserts that ratepayers should not be required to pay executive or management compensation that is based on stock values or that has the primary purpose of benefiting shareholders by aligning the interests of participants with shareholders. OCA St. 1 at 48. OCA's witness cites to utility decisions in Arizona and Florida to support his position that shareholders often bear the cost of stock-based incentive compensation. OCA St. 1-SR at 37. OCA's witness specifically acknowledged that he is not taking the position that stock-based incentive compensation should not be a component of the Company's compensation package. OCA St. 1-SR at 37.

OCA's witness disregards the law and misstates the facts in reaching an erroneous recommendation. Public utilities are entitled to recover all reasonable expenses, including incentive compensation, incurred to provide service to customers. In *Butler Township v. Pa. PUC*, the Commission sought to disallow a portion of rate case expense, on the basis that shareholders benefited from rate increases. The Commonwealth Court concluded:

> The general rule is that a public utility is entitled to recover in rates those expenses reasonably necessary to provide service to its customers and to earn a fair rate of return on the investment and plant used and useful in providing service. *Western Pennsylvania Water Co. v. Pennsylvania Public Utility Commission*, 54 Pa. Cmwlth. Ct. 187, 422 A.2d 906 (1980). Operating expenses include prudently incurred rate case expenses. *Driscoll v. Edison Light and Power Company*, 307 U.S. 104 (1939); *West Ohio Gas Company v. Public Utility Commission of Ohio*, 294 U.S. 63

> (1935). Obviously, the refusal to allow the recovery of a proper expense diminishes to the same extent the utility's return on investment. There is no evidence in the record that the … expenses claimed here were unreasonable, imprudently incurred or excessive in amount.

473 A.2d at 221; *see also T.W. Phillips Gas*, 474 A.2d 355. Aqua PA is entitled to recover in rates all expenses reasonably necessary to provide service to customers. OCA has not claimed that the total stock reward expenses were unreasonable, imprudent or excessive. OCA simply seeks to disallow the expenses on the basis that shareholders benefit from increases in stock prices, without consideration for the customer benefits derived from achievement of the customer performance metrics applied to stock rewards.

The Commission has reviewed and approved incentive compensation programs in numerous prior rate cases. *See e.g.*, *Pa. PUC v. PPL Electric Utilities Corp.,* Docket No. R-2012-2290597, 2012 Pa. PUC LEXIS 1757 (Recommended Decision dated Oct. 19, 2012) ("*PPL Electric 2012 RD*"); *Pa. PUC v. PPL Electric Utilities Corp.*, Docket No. R-2012-2290597, at p. 26 (Order entered Dec. 28, 2012) ("*PPL Electric 2012*"); *Aqua 2008*, at *20-26; *Pa. PUC v. Duquesne Light Co.*, 63 Pa. PUC 337, 1987 Pa. PUC LEXIS 342 (Order dated March 10, 1987); *Pa. PUC v. PPL Gas Utilities Corporation*, Docket No. R-00061398, 2007 Pa. PUC LEXIS 2 (Order entered Feb. 8, 2007); *Pa. PUC v. Philadelphia Gas Works*, Docket No. R-2008-2073938, 2008 Pa. PUC LEXIS 32 (Order dated Dec. 19, 2008). In these cases, and others, the Commission has established a bright line test for incentive compensation expense. If the incentive compensation programs of the utility are reasonable and provide a benefit to ratepayers, then they may be recovered in their entirety. *See, e.g.*, *PPL Electric 2012*, p. 26. The Commission recently applied this standard in approving the recovery of stock-based incentive compensation in *Pa. PUC v. UGI Utilities, Inc. – Electric Division*, Docket No. R-2017-2640058 (Order entered October 25, 2018) ("*UGI Electric*"):

> We find that [UGI] has provided substantial evidence of record to demonstrate that the incentive compensation program as a whole includes both financial and operating metrics and goals which benefit customers.
>
> Where, as here, the incentive program as a whole establishes that the employees' eligibility to receive the benefit is based on performance duties and metrics directly related to the provision of service, the fact that the program includes a financial metric does not disqualify it from allowance as an expense for inclusion in the rate base. We find that because UGI's incentive compensation plan is reasonable, prudently incurred, and is not excessive in amount, UGI is permitted full recovery of this expense.

UGI Electric, pp. 73-74. Here, the Company has demonstrated that its stock reward plans include both financial and operating metrics and goals. The Company further demonstrated that its incentive compensation package is reasonable, prudently incurred and not excessive in amount.

Aqua PA's incentive compensation plan as a whole, and the stock-based component of that plan, include operating metrics and goals directly related to the provision of service. As Aqua PA witness Mr. Packer explained:

> [A] key component of the incentive compensation plan is employee objectives that provide benefits to customers. Many of the employee objectives focus on cost containment, quality service, productivity enhancements and compliance initiatives to ensure reasonable cost and high-quality service to our customers. In addition, some of the objections are geared toward O&M efficiencies which encourage the Company to be as efficient as possible. It would be inappropriate to eliminate from the Company's cost of service this particular component of compensation which is partially responsible for controlling the Company's cost of service while maintaining its high-quality service standard.

AP St. 1-R at 17-18. Cost containment is a specific component of stock-based compensation. HIGHLY CONFIDENTIAL OCA Exhibit LA-4, at p. 13.

Aqua PA also presented unrebutted testimony that its incentive compensation plan, inclusive of the stock component, is reasonable, prudently incurred and not excessive. Aqua PA first provided incentive compensation in 1990, following a recommendation in the Commission's 1988 Management Audit of Aqua PA. AP St. 1-R at 14. In a subsequent 1998 Management Audit, the Commission noted that "the Company has a well-organized and comprehensive executive compensation program" with "appropriate controls in place to adjust compensation levels upward or downward based on performance." AP St. 1-R at 15. The Company also engages the services of a compensation consultant to benchmark its total executive pay package against its peers. The most recent analysis determined that the total direct compensation (total cash compensation plus long-term incentives) paid to top executives is below the 50th percentile of the target market. AP St. 1-R at 16. This clearly demonstrates the total executive compensation, including incentives, is reasonable and not excessive. OCA witness Mr. Smith spends a great deal of time attempting to undermine the Company's reference to the 1998 Management Audit as not supporting the Company's position. OCA St. 1-SR at 35-36. He avers that in 1998, Company employees were not paid stock as part of their incentive compensation. However, the Audit refers to "long term investment" In incentive compensation OCA Exhibit LA-7, at p. 8. That long term reference is stock compensation. The existence of equity based incentive compensation was also noted in the *Aqua 2008 RD*, which approved the recovery of incentive compensation. *Pa. PUC v. Aqua Pa., Inc.*, Docket No. R-0072711, 208 Pa. PUC LEXIS 38, at *30-35 (Recommended Decision dated June 16, 2008) ("*Aqua 2008* RD").

The Company has shown that there are meaningful customer benefits that flow from the stock-based portion of its incentive compensation program. OCA's proposed adjustment to stock-based incentive compensation should be rejected.

4. Supplemental Executive Retirement Plan.

OCA proposes to disallow the cost of the Company's Supplemental Executive Retirement Plan ("SERP"), in the amount of $695,612 for water operations and $57,050 for wastewater operations. OCA St. 1 at 60. OCA contends that the provision of additional retirement benefits to the highest paid current and former employees of the Company is not a reasonable expense recoverable in rates. OCA St. 1 at 61. OCA's proposal is unjustified, and should be rejected.

The SERP is a legacy retirement program for certain highly compensated individuals who did not qualify under the Company's former pension plan due to Internal Revenue Service ("IRS") limitations. AP St. 1-SR at 11-12. Effective April 2003, the Company froze both its pension plan and its SERP to employees hired before that date. Thus, contributions made to pension benefits, through the pension plan and the SERP, are not made for the benefit of any employees hired after that date. AP St. 1-SR at 12. The SERP provides replacement retirement benefits for the limited number[27] of past and present employees and their spouses who are not eligible for the Company's former pension plan. OCA challenges the Company's description of the SERP as a replacement pension plan. OCA St. 1-SR at 45. **[BEGIN HIGHLY CONFIDENTIAL]** [redacted] **[END HIGHLY CONFIDENTIAL]** *See* HIGHLY CONFIDENTIAL OCA Exhibit LA-6, at p. 64.

[27] The number of eligible present and former employees and spouses is shown on HIGHLY CONFIDENTIAL OCA Exhibit LA-4 at 87.

OCA has offered no basis for disallowing a valid pension cost merely because the eligible executives may be receiving a higher benefit than other non-eligible employees. This proposed disallowance appears to be just another aspect of OCA Witness Smith's view that the Commission should mitigate differences between the "haves" and "have nots." OCA 1-SR at 38. However, retirement benefits are a part of the total compensation package needed to obtain and retain qualified executives. While the SERP is no longer a part of the compensation package offered new executives, its use in past compensation packages should not now be second guessed. In particular, the cost of this legacy program, which will diminish over time, should be viewed in the context of Aqua PA's efforts to control and reduce retirement benefits, as Mr. Packer explained:

> The PUC has always supported the Company's pension expense claims and to my knowledge, has always supported the Non-Qualified Plan as well. I was unable to find any challenge to the SERP in any case going back to the Company's last fully-litigated case in 2007, to which our pension expense claims equally went unchallenged.
>
> As I said before, the pension plan is not available to new employees and that has been the case for quite some time, and by extension, the SERP to new executives. Thus, the claimed SERP costs are a legacy program cost. There is no disputing that the cost of a 401K defined contribution plan versus a defined benefit plan is a lower cost benefit to the Company and by extension its customers. As the pension plan and the eligible employees ultimately retire, that reduction in cost of service, along with future reductions in SERP will reduce cost of service. Again, the SERP is only available to those executives who were enrolled in the pension plan, hired prior to 2003. It is not available to new executives and ultimately will be reduced as the eligible members to the plan utilize their benefit.
>
> What is not reasonable is to realize the benefits of the lower cost of service associated with the Company's movement towards a defined contribution plan, but then cherry pick a supplemental benefit because it has a cost and recommend the supplemental benefit's disallowance as unreasonable. Given the Commission's historical support of a pension plan and inclusion of SERP in cost

> of service in prior cases along with the Company's proactive work to end and subsequently reduce the cost of the pension plan, Mr. Smith's proposal to reduce the Company's O&M expense claim by $695,612 for water and $57,050 for wastewater, should be rejected.

AP St. 1-R at 12-13.

E. GENERAL LIABILITY INSURANCE EXPENSE

The Company's claim includes an adjustment related to Insurance Expense. AP St. 4 at 7; AP Exhibits 1-A and 1-B through 1-G, Schedule C-4.6. Aqua PA holds insurance policies for General Liability, Auto Liability, Workers Compensation, and Miscellaneous Other forms of coverage. AP St. 4 at 7. Company witness Mr. Christopher M. Henkel explained that "[t]hese policies are annually reviewed and analyzed by the Company and its third-party insurance broker and carrier, utilizing a multi-year claims history, to determine the required reserve for each type of insurance." AP St. 4 at 7.

For water operations, the Company utilized claims data for each twelve-month period ended December 31 from 2017 through 2021 to derive an average year-over-year increase of 5.97%. This percentage was applied to the HTY expense to derive the claimed FTY and FPFTY amounts. AP St. 4 at 7. In addition, total insurance amounts were further adjusted to remove the portion not charged to operating expense. AP St. 4 at 7. The Company's water operations claim was $6,777,277. AP Exhibit 1-A, Schedule C-2, Line 17.

For wastewater operations, the same methodology was used to derive the FTY and FPFTY amounts. AP St. 4 at 7. However, total wastewater insurance was allocated to base and each other division on the basis of the number of wastewater customers served by each division. AP St. 4 at 7; *see also* AP Exhibits 1-B through 1-G, Schedule C-4.6. The Company's insurance claim for each wastewater division was:

- $67,350 for Wastewater Base. AP Exhibit 1-B, Schedule C-2, line 17;

- $23,155 for Limerick. AP Exhibit 1-C, Schedule C-2, line 17;
- $5,081 for East Bradford. AP Exhibit 1-D, Schedule C-2, line 17;
- $40,482 for Cheltenham. AP Exhibit 1-E, Schedule C-2, line 17;
- $20,275 for East Norriton. AP Exhibit 1-F, Schedule C-2, line 17; and
- $8,051 for New Garden. AP Exhibit 1-G, Schedule C-2, line 17.

Both I&E and OCA opposed the Company's claims. I&E witness Ms. Wilson recommended that the Company's claim be modified to use a "year-over-year three year average" increase or 4.38% from the HTY to the FTY, and the FTY to the FPFY, rather than the five-year average proposed by the Company. I&E St. 1 at 15-16. She argued the three-year average considers "more recent experience" and was consistent with the Company's method for calculating other categories of expenses (*i.e.*, uncollectibles expense and legal expense). I&E St. 1 at 15. OCA witness Mr. Smith accepted the Company's claimed FTY insurance expense, but applied a 4.38% increase to the FTY to calculate his recommended FPFTY amount. OCA St. 1 at 53-54.

In rebuttal, Aqua PA updated its insurance claim to reflect actual information that became available after the case had been filed. Although Aqua PA noted that a five-year average is reasonable because it smooths out anomalies and volatility in changes in insurance premiums, the Company accepted the use of a three-year average. *See* AP St. 4-R at 6. However, the Company applied the three-year average increase of 4.38% to updated actual amounts accrued for FY 2022. AP St. 4-R at 6-7. Mr. Henkel explained:

> after filing its direct testimony and exhibits for this proceeding, the Company accrued its actual fiscal year ("FY") 2022 (Jan 2022 – Dec 2022) insurance expense. On a consolidated basis, the accrual results in a year-over-year increase of 8.49% between FY 2021 ($6,453,903) and FY 2022 ($7,002,098) which is much different than the 4.38% increase forecasted by Ms. Wilson; additionally, it

> is more accurate because it represents actual insurance premiums the Company will pay in fiscal year 2022.
>
> The accrual update and the application of Ms. Wilson's 4.38% increase as described above affect the Company's FTY and FPFTY insurance expense claims; accordingly, the Company's updated FTY and FPFTY insurance expense claims are set forth in Schedule C-4.6 of Exhibits 1-A(a) through 1-G(g).

AP St. 4-R at 6.

In addition, Mr. Henkel testified as to how the updated insurance expense information was used to develop the Company's updated FTY and FPFTY claims reflected in Schedule C-4.6 of AP Exhibits 1-A(a) through 1-G(g):

> I began by calculating AP's annual general liability insurance expense for fiscal years (January to December) 2021, 2022 and 2023. For fiscal year 2021, I relied upon the expenses that are recorded on the Company's books of record. For fiscal year 2022, I utilized the expense that was recently accrued as explained above.
>
> I then applied Ms. Wilson's recommended three-year average increase of 4.38% to the expense that was accrued for fiscal year 2022 to arrive at the forecasted annual expense for fiscal year 2023.
>
> Subsequently, the annual expense amounts for fiscal years 2021 to 2023 were divided by 12 to calculate the monthly expense for each respective year. From these calculations, I was able to derive the Company's updated FTY and FPFTY insurance claims.

AP St. 4-R at 6-7. With respect to the updated FTY amount, Mr. Henkel multiplied the monthly insurance expense for FY 2021 by nine, then multiplied the accrued monthly insurance expense for FY 2022 (updated as previously explained) by three, and added these amounts together. AP St. 4-R at 7. Similarly, the FPFTY claim was updated by multiplying the updated monthly insurance expense for FY 2022 by nine, then multiplying the updated monthly insurance expense forecasted for FY 2023 by three, and adding those amounts together. AP St. 4-R at 7. On a

consolidated basis, the consolidated (total water and wastewater) claim for insurance expense increased the FTY amount by $28,453 and the FPFTY amount by $95,961. AP St. 4-R at 8.

In surrebuttal, OCA witness Smith opposed the Company's updated claim, arguing that the Company "inconsistently mixes calculation elements." OCA 1-SR, at 40. I&E witness Wilson also opposed the Company's update, stating that she "questioned the reliability of the amounts stated." I&E St. 1-SR, at 15. These objections are without merit and should be disregarded. There is nothing unusual or improper in updating the claim to reflect known, actual information for FY 2022, or in developing the FPFTY claim using three quarters of that actual data and one quarter of projected data using the **same** adjustment factor (4.38%) proposed by both the OCA and I&E witnesses in their direct testimony.

The Company's updated general liability insurance expense for water and wastewater operations should be accepted because it considers and reflects the Company's actual FY 2022 Insurance Expense. AP St. 4-R at 8. Neither I&E's nor OCA's recommendations reflect these actual amounts and, therefore, they are not reasonable and should be denied.

F. RATE CASE EXPENSE

The Company's claim also includes a claim for rate case expense. *See* AP Exhibit 1-A through 1-G, Schedule C-4.4. On a consolidated basis, the claimed rate case expense is $2,200,000; 91.51% of this expense is allocated to water cost of service and 8.49% is allocated to the wastewater cost of service based on the ratio of customers served to total customers. AP St. 3 at 3. The Company further proposed to <u>normalize</u> the cost for rate-making purposes over a thirty-six month period (*i.e.*, three years), because the Company anticipates a three year interval between this rate case and the Company's next base rate case. AP St. 3 at 3.

OCA and I&E both proposed adjustments to the Company's claim. First, both OCA and I&E "recommended" that the Company normalize its rate case expense, asserting that it should

not be permitted to amortize this expense. OCA St. 1 at 56; I&E St. 1 at 12.[28] OCA further proposed that a thirty-nine month (*i.e.*, 3.3 year) period by utilized. OCA St. 1 at 56. OCA also recommended the disallowance of $100,000 for Other Consultants and $65,000 for Miscellaneous expense. OCA St. 1 at 55. None of these adjustments should be accepted.

With respect to the other parties' claim that Aqua PA is amortizing its rate case expense, the other parties appear to misunderstand the difference between the Company's treatment of rate case expense for accounting purposes versus its treatment of rate case expense for rate-making purposes. To be clear, Aqua PA "proposes to normalize this cost over a thirty-six month period, which is the anticipated interval between this and the Company's next base rate case." AP St. 3 at 3. Aqua PA witness Mr. Manning further clarified in his rebuttal testimony that:

> For ratemaking purposes, the Company proposes to normalize the cost recovery of this expense vis-a-vis and amortization that is synchronized with the expected timing of the Company's future rate filing schedule – in this instance, 3 years – which is consistent with treatment in previous cases. For accounting purposes, the actual costs are accumulated in account 186, deferred rate case expense, through the pendency of the rate filing. At the conclusion of a rate case, the balance is reduced on a recurring monthly basis through an expense amortization recorded in account 6668.

AP St. 3-R at 7 (emphasis added). Mr. Manning further explained that "[t]he Company has not, nor will it ever, seek to recover unamortized rate case expenses from customers in a future case." AP St. 3-R at 8. Rather, "[f]or accounting purposes, the Company amortizes its per books rate case expense and synchronizes with the number of months as requested in the Company's base rate case filing." AP St. 3-R at 8 (emphasis added). Regardless of the other parties' claims to the contrary, Aqua PA has, in fact, proposed to normalize its claimed rate case expense for rate-

[28] I&E accepted the Company's proposed 36-month period. I&E St. 1 at 12.

making purposes.[29] Therefore, the assertion that Aqua PA must be required to do what it is already doing is unnecessary.

OCA's further proposal to utilize a 3.3-year normalization period is also not reasonable. Mr. Manning explained that OCA's calculated average is distorted by the time period between the Company's 2011 and 2018 rate case, based upon a circumstance specific to the settlement of the 2011 rate case that will not occur in the future. AP St. 3-R at 9. Although rate cases should take into consideration the history of prior filings, there are circumstances that require the consideration of future circumstances. *See Emporium Water Company*, Docket No. R-2014-2402324, at pp. 48-49 (Order Entered Jan. 18, 2015) (citing *PPL Electric 2012*). Indeed, while history is one factor to be considered, it is not the only factor the Commission considers. *See, e.g.*, *Butler Township*, 473 A.2d at 222-223 (the Court affirmed that while historic practice was informative it need not be the exclusive factor relied upon by the Commission). Thus, while history can provide guidance on anticipated future conditions, it cannot and should not be the sole basis for determining revenue requirements as this would defeat the purpose of using a FTY or FPFTY in setting rates. Where, as here, a past circumstance that drove a gap in past rate case filings by the Company is not present, the Commission should not rely exclusively on the past to determine the ongoing period between future rate cases.

OCA's additional adjustments to disallow $165,000 from the Company's claim should also be rejected. While OCA asserts that zero costs had been incurred for Other Consultants as of September 30, 2021, based on the Company's response to OCA-IV-23, there have been invoices processed for Other Consultants, amounting to $40,068, since the filing of that response. AP St. 3-R at 6. Subsequently, other consultants have filed rejoinder testimony and

[29] Mr. Manning further explained that the Company's amortization of rate case expense for accounting purposes was appropriate. *See* AP St. 3-R at 8-9.

can be expected to provide further assistance in the preparation of briefs. Effectively, OCA attempts to take a snapshot of a single month during a base rate proceeding, and ignore the fact that "[a]s further invoices are processed and other services are provided by the consultants" it is reasonable to expect that the Company will "incur the entire $100,000 amount requested for Other Consultants as part of its[] rate case expense request." AP St. 3-R at 6. Similarly, the additional $65,000 of Miscellaneous Expenses can reasonably be expected to be incurred given that this base rate case is being fully litigated. AP St. 3-R at 7.

For these reasons and the reasons more fully explained in the Company's testimony, the Company's proposal to normalize for rate-making purposes its claimed rate case expense of $2,200,000 over three years should be accepted without modification.

G. NON-RATE CASE LEGAL EXPENSE

The Company's claim in this proceeding includes a request to recover $644,475 in non-rate case legal expenses. AP Exhibit 1-A, Schedule C-9. Company witness Mr. Manning explained that the costs for non-rate case legal services are incurred during the normal course of business to protect and defend the Company's interest in a variety of legal matters. AP St. 3 at 6; *see* AP Exhibit 1-A, Schedule C-9.1. The Company utilizes a three-year average of non-rate case legal expenses to reflect the costs incurred in a normal year, and normalizes this claim. AP St. 3 at 6.

OCA proposed an adjustment to the Company's non-rate case legal expense. OCA witness Mr. Smith proposed to reduce the Company's claim by $24,981 to reflect the use of a two-year historical average during the years ending March 31, 2020 and March 31, 2021. OCA St. 1 at 59. Mr. Smith claims that the Company's three-year average includes costs incurred during 2019 that were the highest of the periods used. OCA St. 1 at 58. He further asserts that

this represents an attempt by Aqua PA to have a higher amount of non-rate case legal expense in the FPFTY. OCA St. 1 at 58. Mr. Smith's claims are without merit and should be rejected.

Aqua PA demonstrated that its claim for non-rate case legal expense based upon a three-year historic average is reasonable. Specifically, Mr. Manning explained that "[u]tilizing a three-year average allows for the Company to appropriately account for the ebbs and flows of expense accounts that can fluctuate due to the normal course of business." AP St. 3-R at 10. For this particular category of expense, Aqua PA highlighted that these ebbs and flows include "union contract negotiations that will occur during the FTY." AP St. 3-R at 10. The use of a two-year average, as proposed by OCA, would fail to capture expenses that normally occur on a two-year or more interval, such as the union contract negotiations identified by the Company. *See* AP St. 3-R at 10.

Moreover, the Company's proposal is consistent with its claims in prior rate cases, as well as other expense categories that exhibit similar ebbs and flows in this filing. AP St. 3-R at 10. On the other hand, Mr. Smith's proposal to use a two-year period is inconsistent with his proposal that the Company use a three-year period in its projection of general insurance expenses. AP St. 3-R at 10. OCA's proposal appears to be little more than an attempt to reduce this expense category in a manner that is not reflective of its characteristics.

For these reasons, OCA's proposed adjustment to non-rate case legal expense should be rejected and the Company's claim to recover $644,475 in this expense category should be approved.

H. PURCHASED WATER EXPENSE

The Company's filing includes a claim for $4,135,311 in Purchased Water Expense during the FPFTY. AP Exhibit 1-A, Schedule C-7.1. Details regarding the amounts claimed by supplier were provided for the periods ending March 31, 2019 through March 31, 2023. AP

Exhibit 1-A, Schedule C-7.1.i. This includes $297,839 of purchased water expense from Aqua Ohio. AP Exhibit 1-A, Schedule C-7.1.i, Line 1.

I&E proposed to decrease the Company's claim for Purchased Water Expense by $166,795. I&E St. 1 at 20. I&E witness Ms. Wilson argued that if the Commission approves the Company's rate for service to the Masury Division of Aqua Ohio of $0.232 per hundred gallons, then it should disallow $166,795 of Aqua PA's actual purchased water expense to purchase water from Aqua Ohio – Struthers Division. *See* I&E St. 1 at 19 (recommending the Commission only allow Aqua PA to reflect water purchases from Aqua Ohio based on the implied rate for the Masury Division).

The adjustment proposed by I&E should be rejected. As explained by Aqua PA witness Ms. Feeney, I&E's recommendation ignores the fact that Aqua PA's sales to Masury and Aqua PA's purchases from the Struthers Division of Aqua Ohio are not comparable. AP St. 2-R at 33. Indeed, these sales and purchases take place in different geographic locations: "[AP's] sales to Masury are made from AP's Shenango service area, while AP's purchases are made from the Struthers Division to serve AP's Mahoning Valley service area." AP St. 2-R at 33. Moreover, the Masury and Struthers Divisions of Aqua Ohio are separate; each division has a separately determined cost of service, separate tariffs and separate and different rates. AP St. 2-R at 33.

In surrebuttal, I&E attempted to salvage its recommendation by asserting that it is "based on the premise that the cost of purchased water should be the same as the rate Aqua Pennsylvania receives when it sells water to that same affiliate for ratemaking purposes so that Pennsylvania customers are not harmed." I&E St. 1-SR at 20. Ms. Wilson further asserts that "[t]he Ohio rate is not guaranteed full recovery when that tariff rate is being claimed by a Pennsylvania affiliate in a Pennsylvania rate filing." I&E St. 1-SR at 20.

Each of these additional arguments should be rejected. Effectively, I&E argues that the Commission should disregard the tariffed rate established by another regulatory commission with respect to Aqua Ohio – Struthers Division. Neither Aqua PA nor Aqua Ohio can unilaterally change this rate, however. As the purchase of water from Aqua Ohio – Struthers Division are made pursuant to tariff rates that have been approved by the applicable authorities with jurisdiction to regulate those utility rates, Aqua PA's claimed Purchased Water Expense should not be adjusted. That rate is unaffected by the rate to be charged by Aqua PA to the Masury Division, which is based upon a contract rate established based upon the cost of a competitive alternative available to the Masury Division. *See* Section IV.B.1. *supra*.

I&E's assertion that the Aqua Ohio-Struthers Division rate is not guaranteed full recovery in Pennsylvania is not responsive to the issue. Aqua PA has not claimed that it is guaranteed recovery of that rate. However, as with any expense, the Company has a right to recover the cost so long as it is demonstrated to be reasonable. I&E has not even attempted to argue that the Ohio Public Utilities Commission has established unreasonable tariff rates for Aqua Ohio-Struthers Division; only that the rate is higher than the rate to be charged by Aqua PA to Masury.[30]

For these reasons, the Company's proposal to recover $4,135,311 in this expense category should be approved.

I. PURCHASED POWER EXPENSE (WATER)

In its direct testimony, OCA proposed to increase the Company's claimed Purchased Power Expense for water operations by $96,312. OCA St. 1 at 38. This adjustment is based upon OCA's proposed adjustment to Metered Residential Water sales, which reflect only a

[30] *See Miss. Power & Light Co. v. Miss.*, 487 U.S. 354, 372 (1988) (holding that a state regulatory commission may not enter an order "trapping" the costs a utility is mandated to pay under a FERC order or undertake a "prudence" review of such costs); *see also Pike Cnty. Light & Power Co. v. Pa. PUC*, 465 A.2d 735 (Pa. Cmwlth. 1983) (holding a portion of the purchased power expense claimed by a Pennsylvania utility, which was based upon the FERC-approved tariff rates of an out of state utility, could be disallowed if there was substantial evidence of a less expensive alternative for the purchased of power by the Pennsylvania utility).

portion of the Company's proposed COVID-19 usage adjustment.[31] Aqua PA opposed this adjustment. *See* AP St. 3-R at 10; *see also* AP St. 5-R at 18-19.

Because the Company opposes the OCA's proposed adjustment to Metered Residential Water sales, it similarly opposes OCA's proposed adjustment to Purchased Power Expense (Water). This issue is fully addressed in Section IV.B.3. *supra* and will not be restated here. For those same reasons, the OCA's proposed adjustment to Purchased Power Expense for water operations should also be denied.

J. CHEMICALS EXPENSE (WATER)

In its direct testimony, OCA proposed to increase the Company's claimed Chemicals Expense for water operations by $66,787. OCA St. 1 at 38. Similar to OCA's proposed adjustment for Purchased Power Expense (Water), this adjustment is based upon OCA's proposed adjustment to Metered Residential Water sales, which reflect only a portion of the Company's proposed COVID-19 usage adjustment.[32] Aqua PA opposed this adjustment. *See* AP St. 3-R at 9; *see also* AP St. 5-R at 18-19.

Because the Company opposes the OCA's proposed adjustment to Metered Residential Water sales, it similarly opposes OCA's proposed adjustment to Chemicals Expense (Water). This issue is fully addressed in Section IV.B.3. *supra* and will not be restated here. For those same reasons, the OCA's proposed adjustment to Chemicals Expense for water operations should also be denied.

K. DREDGING EXPENSE

The Company's claimed revenue requirement for water operations included an adjustment to Dredging Expense, to reflect changes to the Company's dredging process. AP

---

[31] As explained in Section IV.C.3. *supra*, the Company proposed an adjustment to water consumption due to the COVID-19 pandemic. AP St. 5 at 17; *see* Exhibit 5-A, Part II, Schedule 6.

[32] *See* footnote 31 *supra*.

Exhibit 1-A, Schedule C-7.3. Aqua PA proposed to accrue a reserve exclusively for dredging costs at a rate of $400,000 per year and charge actual costs against that reserve as they are incurred. AP St. 3 at 5. Moreover, the Company proposed that the reserve be recorded as a regulatory liability on the Company's books, subject to review for reasonableness or future adjustment in later base rate proceedings. AP St. 3 at 6. The Company's proposal was done with the intent that it would result in annual savings to customers.

Specifically, this proposed adjustment would ultimately reduce dredging expense by approximately $300,000 over three years. AP St. 3 at 5. The reduction would occur by shifting the Company's past practice of mobilizing and demobilizing equipment (which has fixed costs of approximately $150,000 each time it occurs) three times over a three year span, to only one time over a three year span. AP St. 3 at 5. By mobilizing and demobilizing only once every three years, the Company is able to reduce the fixed costs associated with this practice, but is still able to dredge on an as needed basis. AP St. 3 at 5.

I&E opposed the Company's proposal to use a reserve for this expense, although it did not oppose the amount of the expense. I&E St. 1 at 20-21. Specifically, I&E witness Ms. Wilson asserted that this is a routine operating expense that should be normalized for rate-making purposes. I&E St. 1 at 21. I&E argued that this expense is not extraordinary in nature, and that this expense is "no different than any other O&M expense." I&E St. 1 at 21.

Contrary to I&E's assertions, Mr. Manning credibly testified that the Company's request to accrue a reserve for dredging costs "will better align the cost recovery in rate making to the operating expense incursion." AP St. 3-R at 9. Indeed, dredging expense "is not systematic and can vary upon water quality conditions." AP St. 3-R at 9. As such, the frequency and amount

incurred can vary. *See* AP St. 3-R at 9. The Company's proposal will also result in annual savings to customers, which further demonstrates that its proposal is reasonable. AP St. 3-R at 9.

L. ADVERTISING EXPENSE

The Company's initial filing includes a claim for Advertising Expense during the FPFTY of $368,810 for its water operations and $7,500 for its wastewater operations. Response to Filing Requirements C. Operating Expense, OE9; Exhibits 1-A and 1-B, Schedule C-4.9, Lines 5 and 3 respectively; *see also* OCA Exhibit LA-3, pages 17-18 of 58 (Aqua PA response to I&E-RE-33-D). Included in this claim is $75,000 for water operations and $7,500 for wastewater operations related to the advertising for the "[e]xplanations of billing practices, rates, rules and regulations" associated with the Company's proposed USP.[33] *See* AP St. 2-R at 34-35; *see also* OCA Exhibit LA-3, pages 17-18 of 58.

OCA recommended that the Company only be permitted to recover $25,000 for water operations and $2,500 for wastewater operations associated with this category of advertising. OCA St. 1 at 40. OCA witness Mr. Smith argues that the costs associated with the "[e]xplanations of billing practices, rates, rules and regulations" for water and wastewater operations during the FPFTY is a "new item," which was not incurred in the HTY and FTY. OCA St. 1 at 40. As such, Mr. Smith proposes to normalize the FPFTY amounts claimed by Aqua PA over three years. OCA St. 1 at 41.

Aqua PA's claimed expense to advertise the proposed new USP should be accepted and OCA's adjustment should be rejected. As an initial matter, Aqua PA notes that Mr. Smith's argument that the Company did not incur the expense projected to advertise its Universal Service Program during the HTY and FTY proves too much. Indeed, this "is a new expense which is related to customer education and outreach for its proposed Universal Service Program." AP St.

[33] The proposed USP is addressed in Section VIII.A. *infra*.

2-R at 35. The program was not in effect in the HTY and will not be in effect during the FTY. However, it is proposed to be in effect during the FPFTY and, therefore, Aqua PA's advertising expense reasonably projects the new amounts associated with ensuring customers are informed about the new program. *See* 66 Pa.C.S. § 1316 (permitting utilities to recover advertising expenses that "(4) Provides important information to the public regarding safety, rate changes, means of reducing usage or bills, load management or energy conservation" or "(5) Provides a direct benefit to ratepayers." (emphasis added)). To "normalize" this expense with prior years when the new program did not exist is unfair.

Furthermore, it is not disputed that customer education and outreach will be critical to the success of the proposed USP. In fact, OCA proposes increased outreach efforts to inform customers of the program. OCA St. 5 at 49; *see also* CAUSE-PA St. 1 at 63-65 (proposing increased customer outreach). However, OCA's response to this demonstrated need for increased advertising to support this new USP is to suggest that Aqua "re-prioritize" other unspecified advertising. OCA St. 1-SR at 29-30. No party has challenged any aspect of the Company's other advertising as unreasonable or not in compliance with the provisions of Section 1316 of the Public Utility Code. 66 Pa.C.S. § 1316(a).

OCA asserts that it is reasonable and prudent for Aqua PA to inform customers regarding the new USP, but that it should not be permitted to recover all of the costs to do so. OCA cannot have it both ways, and its adjustment should be rejected.

M. CONCLUSION AS TO EXPENSES

For the reasons more fully explained above, the Company's updated water and wastewater expenses for the FPFTY as set forth in Exhibits 1-A(a) through 1-G(g) are reasonable and, therefore, should be approved.

VI. TAXES

A. TAXES OTHER THAN INCOME TAXES

Schedule D-2 of AP Exhibits 1-A(a) and 1-B(b) through 1-G(g) present the Company's claim for taxes other than income taxes at present and proposed rate for the FPFTY. Taxes other than income taxes include General Assessments, Public Utility Realty Tax, Pennsylvania property tax and payroll taxes. AP St. 2 at 13.

1. Payroll Tax Expense.

The Company's initial payroll tax claim for all Aqua PA employees included payroll tax expense of $3,163,655. AP Exhibit 1-A, Schedule D-2.5, Line 8.[34] For the same reasons discussed above, the Company has accepted OCA's proposed 2.88% vacancy rate and updated its claim for payroll tax expense accordingly. AP St. 2-R at 41. However, the Company rejects the additional adjustment to payroll taxes related to (1) OCA's reduction to seasonal employees and (2) OCA's proposed removal of stock-backed incentive compensation. AP St. 2-R at 41. Therefore, the updated claim for employee payroll tax expense set forth in AP Exhibits 1-A(a) through 1-G(g) should be adopted.

2. Pennsylvania Public Utility Realty Tax Expense.

The Company's claim includes an adjustment for the Pennsylvania Public Utility Realty Tax ("PURTA"). AP Exhibit 1-A, Schedule D-2.3; AP St. 2 at 13. The PURTA adjustment is only applied to water operations, as wastewater operations are exempt from PURTA, and is based on the estimated tax liability for 2020. AP St. 2 at 13.

I&E initially recommended a reduction of $196,659 to the Company's PURTA claim for water operations. I&E St. 1 at 17. I&E witness Ms. Wilson asserted the recommendation is

[34] Payroll taxes applicable to wastewater operations are allocated and reflected as a component of the intracompany allocation of expenses shown in AP Exhibit 1-A, Sch. C-8.5.

appropriate because it is based on the most recent PURTA claim. I&E St. 1 at 18. Aqua PA witness Ms. Feeney rebutted these arguments and explained:

> [T]he Company estimated its PURTA tax as $4.8 million. This estimate of $4.8 million was paid in May of 2021. As of November 30, 2021, that amount is estimated to be approximately $4.9 million, which produces a possible under payment of $159,251. The Company has not made an upward adjustment for the $159,251 increase. Therefore, Ms. Wilson's recommendation to use the HTY amounts is inappropriate as the Company provided sufficient evidence of the PURTA to be paid.

AP St. 2-R at 42. In addition, Ms. Feeney noted that I&E's concern that the current PURTA tax amount is under appeal and may be reduced was unfounded. I&E St. 1 at 18. Only one county's increased assessment was under appeal and, importantly, regardless of the success of the appeal "the result will increase, it is just a matter of how much." AP St. 2-R at 43.

Based upon this information, I&E subsequently withdrew its recommendation related to the Company's PURTA claim. I&E St. 1-SR at 18-19. As such, the Company's as-filed claim is no longer under dispute and should be accepted without modification.

B. INCOME TAXES

The Company's claim for income tax expense (current and deferred) is set forth on Schedule F-1 of AP Exhibits 1-A(a) through 1-G(g). Other than disallowances of income tax expense related to proposed adjustments to rate base, expenses and return on equity, the only issues raised regarding income tax expense concern interest synchronization and tax repair deductions.

1. Interest Synchronization.

Interest expense on debt is not reflected as part of pre-tax income, but is deductible for both state and federal income tax purposes. Consistent with past Commission practice, the interest expense deduction claimed for ratemaking purposes is calculated using the "interest

synchronization" method, which multiplies the weighted cost of debt in the Company's capital structure by the Company's rate base. *See* AP Exhibit 1-A, Schedule E-1, at 1.

OCA proposes a change to adopt a hypothetical capital structure, which would increase the percentage of debt in the capital structure and consequently increase the pro forma interest expense to be deducted in computing income tax expense. As explained at Section VII.B.2. of this Brief, OCA's proposed hypothetical capital structure is improper, and should be rejected. As such, the OCA's proposed change to pro forma income tax expense due to its change to the weighted cost of debt also should be rejected.

2. Tax Repair Deduction.

OCA proposes to increase the tax deduction for repairs, which would decrease the pro forma income tax expense for the FPFTY. OCA further proposes to change the tax repair "collar" mechanism that is designed to discourage manipulation of the tax repair deduction. OCA proposals are without merit and should be rejected.

a. Description Of The Company's Tax Repair Deduction.

Prior to the filing of the Company's 2018 Base Rate Case, Aqua PA made an election to change its method of income tax accounting for tax repairs. AP St. 8 at 4-5. As a result of this election, the Company is permitted to claim a full tax deduction for certain capital additions qualifying as "repairs" for income tax purposes, rather than depreciate the asset for income tax purposes over time. For book accounting and ratemaking purposes, the Company uses "flow-through" accounting for the benefit of the tax repair deduction.[35] This ratemaking treatment was memorialized in the settlement of the Company's 2018 base rate case. AP St. 8 at 4. The Company has included a net total repair deduction of $159,060,000 in the FPFTY (water -

[35] Normalization of the tax repair deduction for ratemaking purposes is not required under the Internal Revenue Code in order for a utility to claim the tax repair deduction. AP St. 8-R at 2.

$154,600,000, wastewater $4,460,000). AP St. 8 at 5; AP Exhibit 1-A, Schedule F-2; AP Exhibit 1-B, Schedule F-2.[36] The claimed deduction is the projected deduction for the FPFTY, net any provision for uncertain tax positions (*i.e.*, "FIN 48")[37] and any amount for Allowance for Funds Used During Construction ("AFUDC"). AP St. 8 at 4; AP St. 8-R at 5. As explained by AP Witness Saball, the FIN 48 provision for uncertain tax provisions recognizes that a portion of claimed repairs deductions may be disallowed:

> Tax positions are first evaluated as to whether it is more likely than not it will be sustained upon examination, including resolution of any related appeals or litigation processes, based on the technical merits of the position. Tax positions are then evaluated to determine the benefit to recognize in the financial statements, which is the largest amount of tax benefit that is greater than 50 percent likely of being realized upon ultimate settlement.

AP St. 8-R at 6. Stated differently, while the Company claims the greatest tax repair deductions it believes are reasonable, it recognizes that the IRS may ultimately disallow certain claims. When the Company assesses that a claim is less than 50% likely to be realized after ultimate resolution, the Company is required to establish a reserve for the amount of tax benefits that may be disallowed under the foregoing assessment. As Ms. Saball noted, the IRS has yet to issue guidance regarding what capital additions will qualify as repairs, and thus there is uncertainty regarding the actual tax repair deductions that will be allowed. AP St. 8-R at 6. In this case, the Company has assessed that, under FIN 48, $4.0 Million in estimated annual repairs deductions may be disallowed by the IRS after final review. AP St. 8-R at 5.

---

[36] No repair deduction benefit is claimed for the new wastewater system acquisitions, as no investments in those systems are expected to qualify for the repair deduction. AP St. 8 at 6.

[37] Financial Accounting Standards Board Interpretation 48 of Financial Accounting Standards 109. FASB Interpretation No. 48, *www.FASB.org.*

Consistent with the adjustment to the tax repair deduction for FIN 48, the Company has deducted from rate base the reserve created from the exclusion of the amounts for uncertain tax positions. *See* Section III.E.2. *supra.*

In the Company's 2018 Base Rate Case, there were concerns expressed that the projected amount of tax repairs deductions could be substantially inaccurate. In response to this concern, the settlement in the 2018 Base Rate Case contained a "collar" provision, which AP Witness Ms. Saball described as follows:

> The Settlement also contained a provision that should the Company incur a net repairs deduction that was $3 million over or under this target (the "Collar"), the Company would establish a regulatory asset or liability for the income tax expense impacts associated with the amount over or under the $158.9 Million, with such regulatory asset or liability to be incorporated in the Company's next base rate case for inclusion in future tax expense claims. Additionally, the Settlement required that, if the Company incurred net repairs deductions that resulted in the Company reporting a regulatory liability with a net cumulative income tax impact of $10 million or larger, then the Company would notify the Commission, OCA, I&E and OSBA as to a plan to refund the regulatory liability amount to customers.

AP St. 8 at 4. The Company's repair deductions have remained within the collar limitations since the last rate case, and thus no regulatory asset or liability has been created. AP St. 8 at 5. Aqua PA has proposed that the collar methodology be maintained in this case, with an updated target of $159 Million (the claimed net total repair deduction). AP St. 8 at 4.

b. OCA's Proposed Adjustment To The Tax Repair Deduction Should Be Rejected.

In direct testimony, OCA witness Smith proposed to increase the net total repairs deduction for the FPFTY to $167.3 Million from the Company's $159.06 Million. This amount was based upon the Company's estimated net tax repair deduction for the 2021 tax year. OCA St. 1 at 32. In surrebuttal testimony, OCA revised its net total repairs deduction for the FPFTY

to $164.5 Million. OCA St. 1-SR at 16. OCA derived this amount by first averaging the Company's updated projected 2022 tax repair deduction with the original projected tax repair deductions for 2023 and 2024. OCA then eliminated the Company's $4 Million adjustment for FIN 48 uncertain tax positions. OCA Exhibit LA-6, Schedule C-3. OCA's proposed deduction is wrong, for two separate reasons.

First, OCA's witness improperly cherry-picks data to derive his average. While Mr. Smith selectively chose to use updated projected 2022 unadjusted data in his average, he ignored updated data for 2023 and 2024, instead choosing to continue to use the Company's original projections for those years. AP St. 8-RJ at 5. If all updated data were used in the calculation, the result would be a **reduction** from the Company's original claimed tax deduction for repairs, as show in the chart below:

	2022	2023	2024	Average
As Filed Spend[38]	164,500,000	164,500,000	164,500,000	164,500,000
Less AFUDC	-1.440,000	-1.440,000	-1.440,000	-1.440,000
Less FIN 48	-4,000,000	-4,000,000	-4,000,000	-4,000,000
Net Repair Benefit	**159,060,000**	**159,060,000**	**159,060,000**	**159,060,000**
Revised Spend[39]	168,836,249	159,446,960	159,992,972	162,758,727
Less AFUDC	-1.440,000	-1.440,000	-1.440,000	-1.440,000
Less FIN 48	-4,000,000	-4,000,000	-4,000,000	-4,000,000
Net Repair Benefit	**163,396,249**	**154,006,960**	**154,552,972**	**157,318,727**
OCA Spend[40]	168,836,249	164,500,000	164,500,000	165,945,416
Less AFUDC	-1.440,000	-1.440,000	-1.440,000	-1.440,000
OCA Proposal	**167,396,249**	**163,060,000**	**163,060,000**	**164,505,416**

Aqua PA does not support the use of a three-year average to develop the tax repair deduction in this case. However, if a three-year average is to be used, it should not be based upon OCA's

[38] AP St. 8-R at 5.
[39] AP St. 8-R at 5.
[40] OCA Exhibit LA-6, Sch. C-3.

hybrid approach, which seeks to capture the benefit of the highest year of projected repair deductions while ignoring lower years.

The second error in OCA's proposed tax deduction for repairs is the removal of the FIN 48 adjustment. OCA argues that all deductions to be claimed by Aqua PA should be included in calculating rates, regardless of the likelihood that the deductions actually will be allowed. However, as explained by AP Witness Saball, this proposal is a change from the methodology established under the 2018 Base Rate Case settlement. AP St. 8-RJ at 4. Further, OCA's position fails to take into account the ratemaking consequences of its proposal. FIN 48 comes into play when the Company concludes that a deduction more likely than not will be disallowed by the IRS. Such a disallowance would not affect just a single year's tax claim, but would apply to all similar claims in prior years. AP St. 8-R at 6. In that event, and under OCA's position, the Company would need to recoup from customers the disallowed benefits that had been included in rates. AP St. 8-R at 6. In contrast, under the Company's proposal, customers will not be required to return to the Company disallowed deductions, because those deduction will not have been reflected in rates. To compensate customers for the time value of money benefits of the FIN 48 exclusion, the Company deducts from rate base the reserve balance established for all years in which the challenged deductions are claimed. AP St. 8-R at 7. Further, if the IRS ultimately does allow the uncertain tax position following audits, customers will receive the benefit of the reserve balance amortized as a deduction to tax expense in future rate cases. As Ms. Saball explained:

> There is no need to reinvent the wheel here regarding the treatment of FIN 48. It was a component of our 2018 base rate case cost of service and further included as a component of the collar established around the net repair benefit the Commission approved as part of its approval of the joint settlement in the last case. Flowing through the benefit of an uncertain tax position in this

> case is an unnecessary risk for customers of a significant increase related to the disallowance of these uncertain tax positions by the IRS in the future. The benefit of deferring recognition of these uncertain tax benefits in the flow through repair deduction is compensated by the ADIT related to the uncertain tax position. Thus Mr. Smith's recommendation regarding FIN 48 should be rejected.

AP St. 8-R at 4.

c. OCA's Proposed Change To The Collar Mechanism Should Not be Adopted.

As explained above, the Company explained in its direct testimony its proposal to continue to use the collar mechanism for the tax repair deduction. No other party challenged this proposal in their direct testimony. However, in surrebuttal testimony, OCA witness Smith for the first time argued that the collar mechanism was "not intended to become a new regulatory feature that would continue in perpetuity for Aqua" beyond the effective date of rates in this rate case. OCA St. 1-SR at 23.[41] Mr. Smith alternatively argued that if the collar mechanism is to be continued, any collar should be reduced to a band that was $2 Million more or less than the target deduction amount. *Id*. Mr. Smith asserted that a larger collar "could allow Aqua to unfairly manipulate its earnings between rate cases." *Id.*

Aqua PA opposes any further narrowing of the collar. Tax deductions for repairs, like other expense claims and claimed tax deductions, were never intended to become a fully reconciled item in future rate cases. As Aqua PA witness Ms. Saball explained:

> Mr. Smith's concerns of the Company being able to "unfairly manipulate earnings" are an unfair characterization of the purpose of the collar, which is to protect both the customers and the Company from any material differences in the actual tax repair deductions that are realized through the execution of future capital investments, while retaining the general proposition that the

[41] While unstated in Mr. Smith's testimony, Aqua PA assumes that his proposal to eliminate the collar mechanism also would eliminate the regulatory asset/liability component of the mechanism. If not, Mr. Smith's proposal would effectively create a full reconciliation of the repair deduction.

> Company is at risk for changes in expense between rate cases. Simply said, on an after-tax basis, the earnings value of $3 million variance in either direction of the net repair benefit is $866,000, which is hardly material relative to the Company's equity return in this case on approximately $4.1 billion in rate base.

AP St. 8-RJ at 5. OCA's last-minute proposal to shrink the collar amount is unjustified and should not be adopted.

VII. RATE OF RETURN

A. INTRODUCTION REGARDING RATE OF RETURN

As explained in prior sections of this Brief, Aqua PA is continuing to modernize its distribution system and to replace at risk pipe across Pennsylvania. *See* Sections II. and III. *supra*. The Company's total capital expenditures for the years 2021-2025 are expected to total over $1.47 Billion, or approximately 35% of its net utility plant in service at December 31, 2020. AP St. 8 at 9. Aqua PA also continues to step up to the challenges of acquiring troubled or weaker water and wastewater systems in support of the Commission's goal of regionalization. AP St. 1 at 31. Other water, wastewater, gas and electric utilities are similarly in the midst of major infrastructure replacement programs. In order for Aqua PA, and other utilities, to continue to be able to raise the capital necessary to finance these investments, it is critical that the Commission demonstrate that Pennsylvania remains a constructive and supportive regulatory environment, through a fair rate of return. As the Commission observed in *PPL Electric 2012*:

> Furthermore, we note that the setting of the proper return on equity is even more critical in this proceeding as our Pennsylvania jurisdictional utilities implement plans to accelerate the greatly needed replacement of aging infrastructure. Attracting capital to Pennsylvania at reasonable rates to accomplish this infrastructure replacement has never been more important to PPL, its customers and the Commonwealth of Pennsylvania.

PPL Electric 2012, at p. 81.

I&E's and OCA's positions would be directly contrary to the need for a supportive regulatory environment to enable Aqua PA to raise capital at reasonable rates. I&E's proposed 8.9% return on equity is grossly inadequate as compared to recent authorized returns approved by the Commission, as Aqua PA's expert, Mr. Moul, explained:

> Indeed, the Commission established a 9.85% equity return for the Electric Division rate case for UGI Utilities, inc. at Docket No. R-2017-2640058. Since that time, the Commission granted equity returns of 9.54% for Citizens' Electric Company at Docket No. R-2019-3008212, 9.31% for Wellsboro Electric Company at Docket No. R-2019-3008208, 9.73% for Valley Energy at Docket No. R-2019-3008209, 9.86% for Columbia Gas of Pennsylvania at Docket No. R-2020-3018835, and 10.24% for the Gas Division of PECO Energy at Docket No. R-2020-3018929. Moreover, for purposes of setting the Distribution System Improvement Charge ("DSIC"), the Commission has set a 9.80% equity return for water utilities at Docket No. M-2021-3028488 (adopted at Public Meeting held October 7, 2021). In the DSIC proceedings, DSIC recoveries are reconciled and therefore the 9.80% is guaranteed. In a base rate case such as this, a higher equity return is required because that return provides only an opportunity and not a guarantee.

AP St. 7-R at 5.

OCA's position on rate of return is even more extreme. OCA proposes the use of a hypothetical capital structure, contrary to established precedent, and an unreasonably low return on equity of 8.0% based on an unreasonable methodology. If such a result were adopted, the investment community would be very concerned, and begin to question continued investment in Pennsylvania utilities. As Aqua PA's witness, Mr. Moul, explained:

> The investment community would be very concerned if the Commission were to adopt either of the positions of the I&E or OCA. If it were to do so, investors would see Pennsylvania regulation as less supportive of the Company at a time of high levels of capital investment. Over the next five years, AP expects capital expenditures to be nearly $1.5 billion. At present, Pennsylvania regulation is currently ranked Above Average/3 by Regulatory Research Associates ("RRA"), which reflects an upgrade that occurred on May 10, 2017. The rating system used

> by RRA includes three principal categories (i.e., Above Average, Average and Below Average with more refined positions withing the categories designated by the number 1, 2 and 3).
>
> * * *
>
> If the Commission were to follow the proposals of I&E or the OCA, the regulatory ranking of Pennsylvania would certainly be jeopardized. The return on equity used by the Commission to set rates should embody in a single numerical value a clear signal of regulatory support for the financial strength of the utilities that it regulates. Although cost allocations, rate design issues, and regulatory policies relative to the cost of service are important considerations, the opportunity to achieve a reasonable return on equity represents a direct signal to the investment community of regulatory support (or lack thereof) for the utility's financial strength. In a single figure, the return on equity utilized to set rates provides a common and widely understood benchmark that can be compared from one company to another and is the basis by which returns on all financial assets (stocks – both utility and non-regulated, bonds, money market instruments, and so forth) can be measured. So, while varying degrees of sophistication are required to interpret the meaning of specific Commission policies on technical matters, the return on equity figure is universally understood and communicates to investors the types of returns that they can reasonably expect from an investment in utilities operating in Pennsylvania.

AP St. 7-R at 4-5.

The Commission's authorized rate of return on common equity also must take into account substantial increases in inflation that have arisen after the Company presented its direct case, and that have not been given due consideration by I&E and OCA. As Mr. Moul explained:

> A forward-looking assessment of the capital markets is especially relevant here because the Company's rates will be based on a fully projected future test year ("FPFTY"). Higher inflation expectations are a contributing factor that points to higher interest rates. Indeed, higher inflation today is revealed by a 5.9% increase in social security payments announced on October 13, 2021, the largest one-year increase in nearly four decades. FOMC has signaled that it plans to taper its bond buying program (i.e., quantitative easing) in November 2021 and to end it completely by mid-2022. The Fed Funds rate is also likely to increase from very

> low levels that existed during the pandemic. Higher interest rates clearly point to higher capital costs prospectively.

AP St. 7-R at 6. Rising inflation and the announced changes in FOMC policy to increase interest rates clearly indicate higher capital costs in the FPFTY as compared to recent historic costs. These changes also indicate that the declines in capital costs have troughed and that capital costs already are rising. Setting the cost of equity below recent allowances when capital costs are rising would discourage investors from investing in Pennsylvania and/or require higher returns in the future. To be effective, ratemaking must reflect costs that are reasonably expected during the period when rates will be in effect.

As explained in detail below, Aqua PA's proposed use of actual capital structure is proper and in accordance with precedent. Aqua PA's proposed return on common equity of 10.75%, inclusive of an appropriate adjustment for management effectiveness, is fully supported by the record and should be adopted.

1. Rate of Return Standards.

A public utility, whose facilities and assets have been dedicated to the service of the public, is entitled to an opportunity to earn a fair rate of return on its investment. The standards to be used by the Commission in determining what return rate is fair are well-established, having been set forth by the United States Supreme Court in *Bluefield Waterworks and Imp. Co. v. P.S.C. of West Virginia*, 262 U.S. 679, 690 (1923), over eighty years ago: Rates which are not sufficient to yield a reasonable return on the value of the property at the time it is being used to render service are unjust, unreasonable and confiscatory, and their enforcement deprives the public utility of its property in violation of the Fourteenth Amendment.

The return should be reasonably sufficient to assure confidence in the financial soundness of the utility and should be adequate, under efficient and economical management, to maintain

and support its credit and enable it to raise the money necessary for the proper discharge of its public duties. 262 U.S. at 693. These principles have been adopted and applied by the appellate courts of Pennsylvania in numerous cases. *See, e.g.*, *Riverton Consolidated Water Co. v. Pa. PUC*, 140 A.2d 114 (Pa. Super. 1958); *City of Pittsburgh v. Pa. PUC*, 126 A.2d 777 (Pa. Super. 1956); *Lower Paxton Twp. v. Pa. PUC*, 317 A.2d 917 (Pa. Cmwlth. 1974).

The return allowed to investors must be commensurate with the risk assumed, as the Supreme Court has stated in three landmark opinions. *Bluefield, supra* at 692, requires that the rate of return reflect:

> . . . a return on the value of the [utility's] property which it employs for the convenience of the public equal to that generally being made at the same time on investments in other business undertakings which are attended by corresponding risks and uncertainties. . . .

Twenty-one years later, the Supreme Court reiterated that standard in *Federal Power Commission v. Hope Natural Gas Co.*, 320 U.S. 591, 603 (1944), as follows:

> From the investor or company point of view it is important that there be enough revenue not only for operating expenses but also for the capital costs of the business. These include service on the debt and dividends on the stock. By that standard the return to the equity owner should be commensurate with returns on investments in other enterprises having corresponding risks. That return, moreover, should be sufficient to assure confidence in the financial integrity of the enterprise, so as to maintain its credit and to attract capital.

Later, in reaffirming *Hope*, the Supreme Court, in *Duquesne Light Co. v. Barasch*, 488 U.S. 299, 109 S. Ct. 609, 102 L. Ed. 2d 646, 661 (1989) observed that "[o]ne of the elements always relevant to setting the rate under *Hope* is the return investors expect given the risk of the enterprise."

The determination of a fair rate of return thus requires the review of many factors, including: (1) the earnings that are necessary to assure confidence in the financial integrity of the

company and to provide a reasonable credit profile to permit access to capital markets on reasonable terms, and (2) the amount of the investment, the size and nature of the utility and its business and financial risks, in comparison to other enterprises. *Pa. PUC v. Pennsylvania Gas and Water Co. - Water Division*, 341 A.2d 239 (Pa. Cmwlth. 1975); *Lower Paxton Twp., supra*. Moreover, the Commission's findings must be based upon substantial and competent evidence on the record before it, not upon speculation or hypothesis. *Ohio Bell Telephone Co. v. Pub. Util. Comm. of Ohio*, 301 U.S. 292 (1937); *United States Steel Corp. v. Pa. PUC*, 390 A.2d 849 (Pa. Cmwlth. 1978); *Octoraro Water Co. v. Pa. PUC*, 391 A.2d 1129 (Pa. Cmwlth. 1978).

2. Rate Of Return Components.

In determining the overall rate of return, the Commission uses the weighted average cost of capital method. This method determines the percentages of long-term debt, short-term debt and common equity in the Company's capital structure. It then determines the cost rate of capital for each component and weighs it by multiplying the percentages of each class of capital by the applicable cost rate. Aqua PA's proposed cost of capital is as follows:

Type of Capital	Ratio	Cost Rate	Weighted Cost Rate
Long-Term Debt	46.05%	4.00%	1.84%
Common Equity	53.95%	10.75%	5.80%
			7.64%

AP Exhibit 4-A, p. 1.

No party has challenged the Company's claimed cost rates for long-term debt. The issues of dispute involve Aqua PA's capital structure ratio and cost rate of common equity.

B. CAPITAL STRUCTURE RATIOS

The only party to challenge Aqua PA's capital structure is OCA. I&E adopted the Company's capital structure. I&E St. 2 at 12. OCA proposes a hypothetical capital structure of 50% debt and 50% equity. OCA St. 3 at 59. OCA's use of a hypothetical capital structure is unreasonable and contrary to precedent and should be rejected.

1. Aqua PA's Capital Structure.

Aqua PA's capital structure of 53.95% common equity and 46.05% long-term debt is its projected actual capital structure as of March 31, 2023, the end of the FPFTY. AP St. 7 at 20. The Company's FPFTY capital structure is based upon its actual capital structure at HTY ended March 31, 2021, updated for changes during the FTY and FPFTY. The changes are to finance the Company's FTY and FPFTY net rate base additions of approximately $557 million in the FTY and FPFTY. *See* AP Exhibits 1-A through 1-G, Schedule G-1. Specifically, Aqua PA included additional debt of $190 million to be issued in the FPFTY.[42] Aqua PA also projected the retention of approximately $269.7 Million in earnings over the period, and the infusion of an additional $100 million in equity. AP St. 7 at 19.

In support of Aqua PA's capital structure, Aqua PA witness Mr. Moul explained that Aqua PA's common equity ratio is within the range of common equity ratios of the proxy group ("Water Group") of companies that he used in this proceeding. The actual common equity ratios of the Water Group of companies ranges from 40.2% to 55.1%. AP St. 7 at 20. Aqua PA's capital structure contains a common equity ratio that is also with the range of common equity ratios of other parties' proxy groups. OCA adopted Mr. Moul's Water Group as his proxy group. OCA Exhibit DJG-2. I&E's proxy group contains individual company 5-year average equity

[42] Aqua PA also projected redemptions and maturities of $26.869 Million through the end of the FPFTY. AP St. 7 at 19.

ratios ranging from 43.67% to 59.54%. I&E St. 2 at 12. Clearly, Aqua PA's common equity ratio cannot be deemed atypical.

2. OCA's Hypothetical Capital Structure Is Unjustified And Should Be Rejected.

a. Applicable Legal Standards.

The Commission has determined that a utility's actual capital structure is to be used, absent circumstances where the actual capital structure is atypical for the type of utility service being offered. *See Pa. PUC v. City of Lancaster – Water*, Docket Nos. R-00984567, et al., 1999 Pa. PUC LEXIS 39, at *17 (Order dated Sept. 22, 199); *Pa. PUC v. City of Bethlehem*, 84 Pa. P.U.C. 275, 304 (1995); *Carnegie National Gas Co. v. Pa. PUC*, 433 A.2d 938, 940 (Pa. Cmwlth. 1981). In determining whether the claimed capital structure is atypical, the Commission has looked to see whether the capital structure used by the utility is outside the range of that employed by the barometer group of companies considered in the rate of return analysis. If a utility's capital structure is within a reasonable range of similar risk barometer group companies, the utility's capital structure should be used and not a hypothetical capital structure. For example, in *ALLTEL* the Commission stated as follows:

> The ALJ recommended use of the Company's stand-alone capital structure since it met the following characteristics of an appropriate capital structure: (1) It was within a reasonable range of similar risk barometer group companies. (2) It reflected the Company's actual capital structure and projected near term capital structure. (3) It is consistent with the Company's apparent capital structure goal. (R.D., p. 28).
>
> We concur with the recommendation of the ALJ, particularly for the reason that the Company's actual capital structure falls within a range employed by similar risk barometer group companies, described by Mr. Shiavo as commensurate with capital ratios employed by other independent telephone operating companies.

Pa. PUC v. ALLTEL Pa., Inc., Docket No. R-942710 et al., 59 Pa. PUC 447, 491, 1985 Pa. PUC LEXIS 53, *106-107 (Order entered May 24, 1985) ("*ALLTEL*").

This analysis was reaffirmed by the Commission in *PPL Electric 2012*. In that case, PPL Electric proposed to use its actual capital structure. Both I&E and OCA proposed to use a hypothetical capital structure. I&E argued in favor of a hypothetical capital structure based upon a calculated industry average. OCA proposed a hypothetical capital structures that was based on an average of PPL Electric's capital structure for a recent five-year period. OCA further supported its proposal by reference to the average common equity ratio of the barometer group sponsored by the Company. *PPL Electric 2012*, at pp. 63-65. The Commission rejected I&E's and OCA's contentions and adopted the Company's proposed capital structure, concluding:

> Absent a finding by the Commission that a utility's actual capital structure is atypical or too heavily weighted on either the debt or equity side, we would not normally exercise our discretion with regard to implementing a hypothetical capital structure. *See, Pa. PUC v. City of Lancaster – Water*, 1999 Pa. PUC Lexis 37 at *17; *Carnegie Natural Gas Co. v. Pa. PUC*, 433 A.2d 938, 940 (Pa. Cmwlth. 1981). With regard to these factors, we are persuaded by the arguments of PPL that its actual capital structure is not atypical, is within a range of reasonableness, and, pursuant to precedent, provides no basis to employ a hypothetical capital structure. Also, we are further swayed by PPL's assertion that it requires an equity ratio near the high end of the historic range employed by the barometer group companies to support its expanded infrastructure replacement program and its credit rating.

PPL Electric 2012, at p. 68.

The Commission recently confirmed its holding in *PPL Electric 2012* in its decision regarding Columbia Gas of Pennsylvania, Inc.'s 2020 base rate case. *See Pa. PUC v. Columbia Gas of Pennsylvania, Inc.*, Docket Nos. R-2020-3018835, et al. (Order entered Feb. 19, 2021) ("*Columbia 2020*"). In that case, OCA also proposed that the Commission adopt a hypothetical

capital structure of 50% debt and 50% common equity. The Commission rejected OCA's proposal, and stated as follows:

> At the outset, we note that the actual capital structure represents the Company's decision, in which it has full discretion, on how to capitalize its rate base. This actual capitalization forms the basis upon which Columbia attracts capital. For example, Columbia's proposed long-term debt cost rate of 4.73%, *infra,* fully reflects the capitalization determined by the Company to be appropriate. As Columbia noted, the Commission has determined in previous base rate cases that the legal standard in Pennsylvania for deciding whether to use a party's proposed hypothetical capital structure in setting rates is that if a utility's actual capital structure is within the range of a similarly situated barometer group of companies, rates are set based on the utility's actual capital structure.
>
> ***
>
> Based on the forgoing, we find that Columbia's proposed actual capital structure is not atypical and is within a range of reasonableness. Therefore, we find no reason to deviate from the established Commission precedent, supra, or to impose the OCA's hypothetical capital structure on the Company. Accordingly, we shall grant Columbia's Exception No. 16, reverse the ALJ's alternative recommendation on this issue, and utilize Columbia's proposed capital structure of 54.19% common equity, 42.22% long-term debt, and 3.59% short-term debt.

Columbia 2020, at pp. 116, 118.

b. OCA Has Failed To Demonstrate That Aqua PA's Proposed Capital Structure Is Atypical.

OCA has offered no evidence to support a conclusion that Aqua PA's proposed capital structure is atypical, requiring the use of a hypothetical capital structure. OCA's <u>exclusive</u> argument is that equity costs more than debt, and Aqua PA's proposed debt ratio is below that of other industries and below the average of his proxy group of water utilities:

> The fact that stockholders have a lower priority to claims on company assets increases their risk and the required return relative to bondholders. Thus, equity capital has a higher cost than debt capital. Firms can reduce their [Weighted Average Cost of Capital] by recapitalizing and increasing their debt financing.

OCA St. 3 at 54.

> Q. What is your recommended equity ratio?
>
> A. I recommend that the Commission impute a capital structure consisting of 50% debt and 50% equity, which is reflective of the capital structures of the proxy group.
>
> Q. Did you also look at the debt ratios observed in other industries to assess the reasonableness of your proposed debt ratios in this case?
>
> A. Yes. There are currently more than 3,000 firms in the U.S. industries with higher debt ratios than 50% (my proposed ratemaking debt ratio for Aqua), with an average debt ratio of about 64%.

OCA St. 3 at 59.

OCA's own data demonstrates that various water utilities in Mr. Garrett's barometer group employ a debt level at or below that of Aqua PA. OCA Exhibit DJG-14. However, OCA would have the Commission reject this evidence of typical capital structures and employ a process that would direct the use of hypothetical structure any time the equity component in an actual capital structure exceeds the proxy group average. Thus, only actual capital structures with an equity component at or below the proxy group average would be accepted. Such a standard would effectively mean that the Commission would adopt hypothetical capital structure ratios in many more rate cases, contrary to long-established precedent. OCA would further ignore the fact, as noted by the Commission in *PPL Electric 2012*, that the need to support an extensive infrastructure replacement program further justifies an equity ratio above the "average."

OCA has not, and cannot, show that Aqua PA's capital structure is outside the norm for comparable water companies. Having failed to do so, OCA impermissibly attempts to interfere in the management discretion of Aqua PA to determine the capital structure the Company

believes is necessary. OCA has failed to demonstrate that Aqua PA's actual capital structure is atypical or unreasonable and therefore the use of a hypothetical capital structure is inappropriate.

3. Conclusion as to Capital Structure.

Aqua PA is acting prudently to replace aging plant to maintain reliable service, and is maintaining a financial profile that will enable it to obtain the necessary financing to do so. That financial profile is within the range of capital structure ratios of the proxy groups presented in this proceeding. OCA's hypothetical capital structure must be rejected.

C. DEBT COST RATE

Aqua PA's long-term debt cost rate is 4.00%. No party has challenged these debt cost rates, and they should be adopted in the context of Aqua PA's actual capital structure ratios for debt.

D. RETURN ON COMMON EQUITY

The record in this proceeding contains extensive testimony concerning the cost rate for common equity capital. AP St. 7, 7-R and 7-RJ; I&E St. 2 and 2-SR; OCA St. 3 and 3-SR. In these statements, witnesses for the Company, I&E and OCA apply various theoretical models using various inputs to estimate the cost of equity. The appropriate components of these models and the selection of inputs to these models is a matter of the judgment of each witness. It is important in reviewing these judgments that the realities of the marketplace and the concerns of investors, who determine the cost of equity capital by purchasing common stock of utilities, be considered. These judgments also should be examined in the context of other recent determinations by the Commission regarding the cost of common equity, as well as substantial increases to inflation and the FOMC's announced response thereto that became evident in the latter months of 2021, to measure the reasonableness of the recommendations. AP St. 7-R at 3-7.

1. Aqua PA's Cost Rate for Common Equity Capital.

Aqua PA's witness, Mr. Moul, summarized his approach to determining the cost rate for common equity and the results of his analysis in his direct testimony, as follows:

> In general, the use of more than one approach provides a superior foundation to arrive at the cost of equity. At any point in time, a single method can provide an incomplete measure of the cost of equity depending upon extraneous factors which may influence market sentiment. The specific application of these methods/models will be described later in my testimony.
>
> The following table provides a summary of the indicated costs of equity using each of these approaches.

	Water Group
DCF	11.78%
Risk Premium	10.50%
CAPM	13.40%
Comparable Earnings	12.80%
Average	12.12%
Median	12.29%
Mid-point	11.95%

> Focusing upon the market model approaches of the cost of equity (i.e., DCF, RP and CAPM), the average equity return is 11.89% (11.78% + 10.50% + 13.40% = 35.68% ÷ 3). Looking at DCF and RP alone, the average equity return is 11.14% (11.78% + 10.50% = 22.28% ÷ 2). Based on these results, and after discussion with the Company, I propose an equity return of 10.75%. My recommended cost of equity of 10.75% makes no provision for the prospect that the rate of return may not be achieved due to unforeseen events. Furthermore, general inflationary pressures can produce cost increases that will negatively impact the Company's return unless provision for them is recognized in the ratesetting process.

AP St. 7 at 6-7.

Mr. Moul further explained that the Commission should consider evidence of superior management performance in setting the allowed rate of return on common equity in this case:

> The Commission has determined in a prior AP base rate case that the Company's cost of equity should reflect the exemplary performance of its management, including AP's efforts to help the Commission deal with the problems created by small and non-viable water and wastewater systems throughout the Commonwealth. The Company's excellent management performance once again has been exhibited since its last base rate case, as Mr. Packer explains in his direct testimony (AP Statement No. 1). Because of the Company's decision to employ an equity return rate near the low end of my recommended range in order to moderate its proposed rate increase, I have not quantified the increment to recognize the Company's superior management performance. However, increments for recognition of superior management performance granted by the Commission have ranged from 0.05% to 0.25%, and the Commission granted AP an increment for superior management performance of 0.22% in its 2008 base rate case. The superior performance of AP's management and the increments that the Commission has added to recognize excellent management performance in prior cases, including AP's, are factors the Commission should consider in assessing all of the evidence presented on the issue of cost of capital in this case.

AP St. 7 at 7-8.

Mr. Moul further explained why more than one model should be used to determine the cost of common equity:

> It is also important to reiterate that no one method or model of the cost of equity can be applied in an isolated manner. Rather, informed judgment must be used to take into consideration the relative risk traits of the firm. It is for this reason that I have used more than one method to measure the Company's cost of equity. As I describe below, each of the methods used to measure the cost of equity contains certain incomplete and/or overly restrictive assumptions and constraints that are not optimal. Therefore, I favor considering the results from a variety of methods. In this regard, I applied each of the methods with data taken from the Water Group and arrived at a cost of equity of 10.75% for AP.

AP St. 7 at 22.

a. Barometer Group.

Mr. Moul used a proxy group of eight water companies, which will be referred to as the "Water Group." The Water Group companies have the following common characteristics: 1) they are listed in the "Water Utility Industry" section of The Value Line Investment Survey ("Value Line"), which is an investment advisory service widely used in public utility cases; and 2) their stock is publicly traded. AP St. 7 at 5; AP Exhibit 4-A, p. 6.

OCA witness Mr. Garrett accepted Mr. Moul's proxy group. OCA St. 3 at 17. However, I&E witness Mr. Spadaccio excluded Artesian Resources Corporation from Mr. Moul's Water Group to create his barometer group. Mr. Spadaccio stated that he excluded Artesian Resources because it did not have projected investment information from Value Line. I&E St. 2 at 10. However, the composition of a barometer group should not be dependent upon whether relevant data is available from a specific source. Other source data is available for Artesian Resources,[43] and thus it should be included in the proxy group used in this case.

b. DCF.

The DCF model seeks to explain the value of an asset as the present value of future cash flows, discounted at the appropriate rate. AP St. 7 at 22. As Mr. Moul explained, there are certain limitations and assumptions inherent in the DCF model that limit its usefulness as the sole basis for determining an appropriate cost rate for common equity. One is that the Commission's setting of the cost of equity affects investors' expectations of future growth, thereby creating a degree of circularity in determining the DCF growth rate. A second is the assumption that stock price, earnings pers share, dividends per share and book value per share all move at the same constant growth rate when actual experience demonstrates the contrary. AP St. 7 at 23; AP St. 7-R at 10-11. Understanding these limitations and the need they create to

[43] *See* AP Exhibit 4-A, pp. 15-18.

consider other methods, Mr. Moul's DCF analysis is comprised of a dividend yield, a growth rate and a leverage adjustment as follows:

	Dividend	+ Growth	+ Leverage	= DCF Cost Rate
Water Group	1.94%	7.50%	2.34%	11.78%

i. Dividend Yield.

Mr. Moul derived the dividend yield by calculating the six-month average dividend yields for the Water Group, and then adjusting those yields for expected growth in the dividend using three well-recognized approaches to produce the dividend yield of 1.94%.[44] AP St. 7 at 24. Mr. Moul used a six-month average to reflect current capital costs, while avoiding the volatile nature of spot yields. *Id.*

ii. Growth Rate.

Mr. Moul's growth rate reflects his expert analysis, following a review of both historic and projected growth rates in earnings per share, dividends per share, book value per share, and cash flow per share for the Water Group. However, the DCF is an expectational model. Investors do not purchase past earnings, but instead rely upon analysts' forecasts to develop their expectation of future earnings. AP St. 7 at 26-27. In addition, analysts' projections already include consideration of all relevant data including historic growth rates. Therefore, Mr. Moul principally relied upon five-year forecasts of earnings per share growth, as earnings growth appropriately measures the growth in price over time:

> Although the constant form of the DCF model assumes an infinite stream of cash flows, investors do not expect to hold an investment indefinitely. Rather than viewing the DCF in the context of an endless stream of growing dividends (e.g., a century of cash

[44] Because Mr. Moul uses experienced dividend yields, the results must by adjusted to reflect anticipated cash flows, to conform to the expectational nature of the DCF model. AP St. 7 at 24.

> flows), the growth in the share value (i.e., capital appreciation, or capital gains yield) is most relevant to investors' total return expectations. Hence, the sale price of a stock can be viewed as a liquidating dividend that can be discounted along with the annual dividend receipts during the investment-holding period to arrive at the investors' expected return. The growth in the price per share will equal the growth in earnings per share if, as the DCF model assumes, there is no change in the price-earnings (P-E) multiple. As such, my company-specific growth analysis, which focuses principally upon five-year forecasts of earnings per share growth, conforms with the type of analysis that influences investors' expectations of their actual total return. Moreover, academic research also focuses on five-year growth rates specifically because market outcomes occurring over that investment horizon are what influence stock prices.

AP St. 7 at 27-28. Mr. Moul relied upon three separate sources of projected earnings growth: IBES/First Call, Zacks and Value Line. AP Exhibit 4-A, p. 17. From this data, and applying judgment, Mr. Moul recommended a growth rate of 7.5%. This value is within the range of analysts' forecasts of five-year earnings per share growth rates. AP St. 7 at 30. The reasonableness of this growth rate recommendation is further supported by anticipated earnings growth for Aqua PA associated with continued elevated infrastructure spending. *Id.*

iii. Leverage Adjustment.

The parties in this proceeding have devoted substantial portions of their testimony to the reasonableness of employing a leverage adjustment as part of the DCF analysis. In this regard, I&E and OCA attempt to overlook that the Commission has included such an adjustment in numerous prior rate cases. *See, e.g.*, *Popowsky v. Pa. PUC*, 868 A.2d 606, 612-13 (Pa. Cmwlth. 2004) ("*PA American*"); *Pa. PUC v. Pa. American Water Co.*, Docket No. R-0001639 (Order dated Jan. 10, 2012) (approving 60 basis point adjustment); *Pa. PUC v. PPL Gas Utilities Corp.*, Docket No. R-00061398, 2007 Pa. PUC LEXIS 2 (Order entered Feb. 8, 2007) (approving 70 basis point adjustment); *Aqua 2004 Order*, at *85-87 (adopting 60 basis point adjustment); *Pa. PUC v. PPL Electric Utilities Corp.*, Docket No. R-00049255 (Order dated Dec. 6, 2004)

(approving 45 basis point adjustment). Before addressing these cases, however, Aqua PA will briefly explain the basis for the leverage adjustment.

Mr. Moul explained that the leverage adjustment is designed to adjust the DCF cost rate for the different percentage of debt in the capital structure calculated at market values of equity and long-term debt (*i.e.*, the values used by investors in the DCF analysis) as compared to the percentage of debt in the capital structure at book value (*i.e.*, the values used in the ratemaking process). AP St. 7 at 26-27. For example, a utility that has a stock price above its book value and has an embedded cost of debt different from the marginal cost of debt, has a market value or capitalization of its equity that is greater than the book value of its equity. When an investor purchases that equity at the market price (*i.e.*, the price used in the DCF model), the percentage of equity in the market capitalization is greater than the percentage of equity at book value. Under such circumstances, the DCF cost rate based on market prices must be adjusted upward to reflect the greater financial risk created by a higher debt ratio when that cost rate is applied to a book value capitalization in utility proceedings. *Id.*; AP St. 7-R at 23-25.

The Commonwealth Court has held that the decision of whether to adopt a leverage adjustment is within the Commission's discretion. In *PA American*, the Commonwealth Court stated:

> As to economic theory, the PUC explains the reasons the common equity costs rate adjustment is appropriate. First, the formula used to estimate cost rate is market based, but Utility's stock is not publicly traded and is listed at a much lower book value. Under these circumstances the formula can understate the cost of capital.
>
> • • •
>
> Similarly, Utility highlights the testimony of its expert, who opined that "the capital structure ratios measured at the utility's book value show more financial leverage, and hence higher risk, than the capitalization measured at its market values." R.R. at 987a.

• • •

> The present issue involves the application of a market value cost to a book value amount of common stock. The PUC made its adjustment to the common equity cost rate in recognition of the "financial risk" arising from the different valuation methods.
>
> No witness stated that 0.6% was an appropriate adjustment. However, as Utility's expert opined that an adjustment of about 0.8% was appropriate, the record supports an adjustment larger than that approved. Further, case law supports an adjustment. E.g., West Penn Power Co. Also, the amount of the adjustment is exactly the same in this case as in the last rate proceeding involving Utility. R.R. at 900a. That prior order was not appealed. Under these circumstances, there was no abuse of discretion in making the identical adjustment.

PA American, 868 A.2d at 612-13 (footnote omitted).

Parties to this proceeding incorrectly argue that the Commission has fundamentally rejected leverage adjustments by citing several cases. First, in *Aqua 2008*, the Commission declined to use a leverage adjustment in arriving at the DCF cost of equity because the unadjusted DCF results presented by Aqua adequately captured the perceived risk associated with Aqua's market-to-book ratio. The Commission explained:

> Based upon our analysis and review of the record, the Recommended Decision, and the Exceptions and Replies thereto, we reject the ALJ's recommendation to add a 65 basis point risk adjustment. The award of such an adjustment is not precedential but discretionary with the Commission. In fact, in *Met Ed/Penelec* (*Pa. P.U.C. v. Metropolitan Edison Co./Pennsylvania Electric Co.* Order of Jan. 11, 2007, at R-000161366 and R-00061367), we specifically approved the removal of any risk adders from the cost of equity calculations. *Met Ed/Penelec* at 136.
>
> In the cases cited by Aqua in support of its leverage adjustment, it is obvious that the DCF results in those cases were not as high as the unadjusted DCF result we have in this proceeding, since the final cost of equity in those cases was no higher than 10.6% with the leverage adjustment. The unadjusted DCF results presented by the Parties in this case are generally higher than the DCF recommendations from the earlier cases cited by Aqua. When viewed in the context of the other methodologies, we conclude that

> there is no need to have an upwards adjustment to compensate for any perceived risk related to Aqua's market-to-book ratio. Accordingly, we reject the ALJ's recommendation to allow a 65-basis point leverage adjustment.

Aqua 2008, at *46-47. Importantly, while the Commission declined to adopt Aqua's proposed leverage adjustment, it ultimately approved an 11.0% cost of common equity, which was also inclusive of a 22-basis point adjustment for managerial performance. *Aqua 2008*, at *68-69.

Second, in *Pa. PUC v. City of Lancaster Bureau of Water*, Docket Nos. R-2010-2179103, et al. (Order dated July 14, 2011) ("*City of Lancaster 2011*") the Commission declined to adopt a leverage adjustment. However, this order does not foreclose the adoption of a leverage adjustment. Rather, the Commission simply exercised its discretion in that proceeding not to adopt a leverage adjustment, citing the *Aqua 2008* case that it was unnecessary to adopt the leverage adjustment in that proceeding. *Id.*, at p. 79. This is consistent with the Commission's actions in other proceedings where it has reviewed the entire record and either chose to adopt or chose not to adopt a leverage adjustment based upon the specific circumstances of each case. As explained above, it is especially appropriate to adopt the leverage adjustment in this proceeding to address understated DCF results and account for the understatement of the DCF cost rate created by the mismatch between market and book values of the Company's capitalization. As noted earlier, prospective capital costs are rising with significant actual inflation and major changes in FOMC policy. Further, as noted previously, the Commonwealth Court in *PA American* specifically affirmed the Commission's authority to include the leverage adjustment in the DCF analysis.

Moreover, the *City of Lancaster 2011* decision is clearly distinguishable. The City is not an investor owned utility, such as Aqua PA. In its Order, the Commission specifically

recognized that the City did not have the same financial risk profile as an investor-owned utility, stating as follows:

> We note that the City's debt cost rate in this proceeding is at 4.66%, which reflects the City's ability to tax. This illustrates that the City's taxing power lowers the City's financial risk when compared to an investor-owned utility. Since Lancaster's status as a municipally owned utility provides it with the opportunity to obtain debt at this low cost rate as a result of the City's ability to tax, this low cost debt should not be shifted to higher cost equity at the expense of the City's customers. <u>As a result, we do not find that the City has to be treated like an investor owned utility for ratemaking purposes.</u>

City of Lancaster 2011, at p. 54 (emphasis added). It is clear from the Order that this lower risk profile impacted the Commission's decision in that proceeding.

OCA and I&E also may attempt to rely upon *PPL Electric 2012* and *UGI Electric*, to further bolster their contention that Aqua PA's proposed leverage adjustment be disallowed. However, it is important to recognize that the Commission did not approve the requested leverage adjustment in *PPL Electric* 2012 because the Commission approved a cost of common equity at the higher end of the ranges proposed by the parties, *see PPL Electric 2012*, at p. 82, and the Commission granted a management performance increment in *UGI Electric*. AP St. 7-R at 16-17. Clearly, the Commission elected not to approve the leverage adjustment in those cases because the approved cost of common equity adequately recognized the risks associated with investment.

Finally, other parties may try to rely upon the Commission's decision in *Columbia 2020*. However, as Mr. Moul explained, Columbia elected in that case, in the midst of the pandemic, to accept the cost rate for common equity proposed by I&E, and thus did not argue the leverage adjustment in Exceptions to the Commission. *Id.*

The current inputs to the DCF presented in this case and current circumstances support a renewed consideration of a leverage adjustment to the DCF results and/or consideration of the results of other equity cost rate models. The unadjusted DCF results, ranging from the low of 8% recommended by OCA,[45] to Mr. Moul's unadjusted result of 9.44%, demonstrates that the DCF is currently producing unreasonable results that do not fully take into account the risks facing Aqua PA. AP St. 7-R at 17. Among these risks is the precipitous rise in inflation; higher inflation expectations point to higher interest rates, and higher interest rates will contribute to higher capital costs prospectively, because higher inflation results in greater risk of recovery of operating costs and greater volatility or earnings, thereby increasing capital costs. AP St. 7-R at 6. The Commission should conclude that there is a need to have an adjustment to the DCF to again consider risk not properly reflected in the DCF results.

c. Risk Premium.

Aqua PA witness Mr. Moul also performed a risk premium analysis to determine the cost of common equity. The risk premium analysis is based upon the fundamental principle that an equity investor in a given company has a greater investment risk than a bond holder in the same company. AP St. 7 at 35. This is because interest on bonds is paid before any return is received by the equity investor, and the bond holder receives a return of its capital before an equity investor receives any return of capital in the event of bankruptcy or the dissolution of the subject company. Furthermore, the risk premium analysis has common sense appeal to investors, who expect to earn an equity return in excess of bond returns as compensation for the increased risk associated with equity investments. AP St. 7-R at 23. Accordingly, the risk premium method determines the cost of equity by summing the expected public utility bond yield and the return on

[45] As will be explained later in this Brief, OCA's witness actually endorse a growth rate that would produce a DCF result barely above the cost of long-term debt.

equity over bond returns (*i.e.*, the "equity premium") over an historic period.

Mr. Moul determined the risk premium cost of common equity as follows:

	Interest Rate	+ Risk Premium	= RP Cost Rate
Water Group	3.75%	6.75%	10.50%

The interest rate used by Mr. Moul is based upon projections of interest rates for A-rated public utility bonds using the Blue Chip Financial Forecasts as a basis. AP St. 7 at 37. Mr. Moul summed the Blue Chip forecast yield on Treasury bonds plus a spread to reflect the borrowing cost of a public utility.

The risk premium used by Mr. Moul reflects historical risk premiums over long-term corporate bonds. AP St. 7 at 38. Importantly, Mr. Moul highlighted the fact that the equity risk premiums bear an inverse relationship to the interest rates of long-term corporate bonds (*i.e.*, when long term interest rates are low, the equity risk premium is high and vice versa). Mr. Moul developed his risk premium from an analysis of results from 2021 SBBI Yearbook, Stocks, Bonds, Bills and Inflation.

Neither I&E witness Spadaccio nor OCA witness Garrett have presented a Risk Premium analysis. However, as Mr. Moul explained, the risk premium approach has particular appeal in a period of rising interest rates:

> So, while Mr. Spadaccio and Mr. Garrett decline to use the Risk Premium approach to measure the Company's cost of equity, it is an approach that provides a direct and complete reflection of a utility's risk and return because it considers additional factors not reflected in the beta measure of systematic risk. It is particularly useful when investors expect changes in the cost of debt prospectively, which is currently the expectation of investors, as I have explained above and in AP St. No. 7, pages 35-39. Indeed,

> the Risk Premium approach provides for direct reflection of prospective interest rates in the model and therefore should be given weight in determining the equity cost rate in this case.
>
> ***
>
> Mr. Spadaccio's assertion that the Risk Premium method does not measure the current cost of equity as directly as the DCF is similarly without foundation. As I explained in my direct testimony and earlier in this rebuttal testimony, we are facing the prospect of increasing interest rates for the future. I incorporated the trend toward higher interest rates when I developed my Risk Premium cost of equity of 10.50%. Hence, my Risk Premium cost rate is fully responsive to changing market fundamentals and the credit quality of the Water Group.

AP St. 7-R at 23-25. Therefore, Mr. Moul's risk premium result should be given weight in establishing the rate of return on common equity in this case.

d. CAPM.

Aqua PA witness Mr. Moul also prepared a CAPM analysis to estimate the cost of common equity for the Water Group. The CAPM analysis is similar in concept to the risk premium analysis in that it determines a "risk-free" interest rate based on U.S. Treasury obligations and an equity risk premium that is proportional to the beta measure of systematic risk of a stock, which are summed to produce the cost rate of equity. AP St. 7 at 39. To this, Mr. Moul added a size adjustment. AP St. 7 at 42. Mr. Moul determined the CAPM cost of equity as follows:

	Rf	+ Beta	x (Rm-Rf)	+ Size	= CAPM Rate
Water Group	2.75%	1.07	(9.00%)	1.02%	13.40%

Mr. Moul determined the risk free (RF) rate to be 2.75% based on current and forecasted yields on long-term Treasury bonds. AP St. 7 at 41. Mr. Moul recommended the use of longer-

term Treasury bonds because shorter-term rates are more affected by policy initiatives of monetary officials. AP St. 7-R at 19.

For the market premium (Rm-Rf) component of the CAPM analysis, Mr. Moul calculated a 9.00% premium, based upon an average derived from historical data (9.21% premium) and forecasted returns (8.79% premium). AP St. 7 at 42.

For the beta measure of systematic risk, Mr. Moul used leveraged betas developed from Value Line betas. As Mr. Moul explained:

> I used the Value Line betas as a foundation for the leverage adjusted betas that I used in the CAPM. The betas must be reflective of the financial risk associated with the rate setting capital structure that is measured at book value. Therefore, Value Line betas cannot be used directly in the CAPM, unless the cost rate developed using those betas is applied to a capital structure measured with market values. To develop a CAPM cost rate applicable to a book-value capital structure, the Value Line (market value) betas have been unleveraged and re-leveraged for the book value common equity ratios using the Hamada formula. . .

AP St. 7 at 40.

Finally, Mr. Moul included a 1.02% size adjustment to his CAPM analysis to account for the size difference between water utilities and the much larger electric and gas utilities that comprise the S&P Public Utilities. AP St. 7 at 19. This adjustment is based upon generally accepted and widely recognized literature that states smaller firms have higher capital costs than larger firms. AP St. 7 at 42-43.

Other parties have opposed the addition of a size adjustment in the CAPM, questioning whether there is a difference in capital costs among utilities based upon size. I&E St. 2 at 48-49; OCA St. 3 at 50-52. Mr. Moul explained the error in these contentions:

> As a preliminary matter, it is noteworthy that CAPM provides compensation solely for systematic risk, and that the size of the Water Group must be considered separately. As I indicated with the data presented on Schedules 2, 3 and 4 of AP Exhibit 4-A, the

> water utilities are small as they are just 9% to 11% of the size of the electric and gas utilities that comprise the S&P Public Utilities. Indeed, recent Federal Energy Regulatory Commission's ("FERC") orders specifically prescribe an adjustment to the CAPM due to the size of an enterprise. Mr. Spadaccio's arguments revolve around the purported distinction between regulated utilities and unregulated industrial companies (see page 49 of I&E Statement No. 2). However, the Wong article that he relies upon was authored twenty (20) years ago, and employed data going back into the 1960s. Enormous changes have occurred in the industry since the 1960s that have fundamentally changed the utility business. The Wong article also noted that betas for the non-regulated companies were larger than the betas of the utilities. This, however, is not a revelation, because utilities continue to have lower betas than many other companies. This fact does not invalidate the additional risk associated with small size.
>
> The Wong article further concludes that size cannot be explained in terms of beta. Again, this should not be a surprise. Beta is not the tool that should be employed to make that determination. Indeed, beta is a measure of systematic risk and it does not provide the means to identify the return necessary to compensate for the additional risk of small size. In contrast, the famous Fama/French study (see "The Cross-Section of Expected Stock Returns," The Journal of Finance, June 1992) identified size as a separate factor that helps explain returns.

AP St. 7-R at 20-21. A size adjustment is appropriate and should be included in the CAPM results.

e. Comparable Earnings.

Aqua PA witness Moul also performed a comparable earnings analysis based on the principle set forth by the United States Supreme Court that a utility should be afforded an opportunity to earn a return on its property equal to that being earned on investments in other businesses with corresponding risks and uncertainties. *Bluefield Water Works v. Public Service Commission*, 262 US 668 (1982). The analysis identifies non-regulated companies with comparable risk and produces a cost rate of 12.80%. AP St. 7 at 46.

f. The Cost Of Equity Should Include An Increment For Management Performance.

Aqua PA has demonstrated strong performance in the area of management effectiveness, which should be recognized by the Commission through an addition to the cost of common equity. Furthermore, I&E's and OCA's contentions disputing Aqua PA's proposed addition to recognize its management effectiveness are without merit and should be rejected. This will be explained further in Section VII.D.3. of this Brief.

2. Opposing Parties' Unreasonable Common Equity Cost Rate Recommendations Must be Rejected.

I&E and OCA have advanced cost of common equity recommendations (8.9% and 8.00%, respectively) that, if adopted, would undercut years of supportive rate regulation in Pennsylvania. These recommendations ignore clear evidence of rising interest rates and the Commission's well-recognized policies of supporting capital investments to replace aging infrastructure and to address the problems of small, troubled water companies. As Mr. Moul explained:

> These proposed returns are unreasonable because they are much too low to allow AP to achieve the level of returns that meet investor expectations. Equity returns of this magnitude would be viewed by investors as unsupportive of the Company's financial condition.

AP St. 7-R at 3. These recommendations are also unprecedented in the context of recent fully-litigated rate cases before this Commission. As explained previously, in the past year the Commission allowed a 9.86% rate of return on common equity for Columbia at Docket No. R-2020-3018835, and 10.24% for the Gas Division of PECO Energy at Docket No. R-2020-3018929. Moreover, the Commission recently authorized, for purposes of setting the DSIC, a 9.80% equity return for water utilities. *TUS Report on the Quarterly Earnings of Jurisdictional*

Companies for the Year ended June 30, 2021, Docket No. M-2021-3028488, Attachment G ("*Quarterly Earnings Report*").

a. I&E's Return On Common Equity Recommendation Is Understated.

I&E witness Mr. Spadaccio based his 8.90% rate of return on common equity recommendation solely on the results of his DCF method. He prepared a CAPM analysis, but only as a check on his DCF result. I&E St. 2 at 21. Importantly, Mr. Spadaccio's CAPM result is 9.89%, yet he gave no consideration to that nearly 100 basis point higher result in developing his recommendation. I&E St. 2 at 27. The failure to give consideration to the CAPM result in the face of rising interest rates when the CAPM considers projected interest rates and the DCF does not provides a fundamentally flawed recommendation.

The use of a single methodology to derive an equity rate of return recommendation ignores the flaws inherent in each method considered by investors.[46] AP St. 7-R at 11. For example, the DCF calculation used by Mr. Spadaccio includes results for Middlesex Water, which produces a DCF outcome of 4.77%. Such an outcome defies a fundamental tenet of financing that the cost of equity must exceed the cost of debt by a meaningful margin, to compensate for the substantial risk differences between holders of equity and debt in an enterprise. AP St. 7-R at 12.[47] In basing his recommendation solely upon the DCF model, Mr. Spadaccio has allowed biases in that model to drive an unreasonable recommendation. As Mr. Moul observed:

> Indeed, the influence of other methods must have an impact on the Commission's attitude toward the DCF model because the Commission's selection of the rate of return on equity for use in

[46] Mr. Spadaccio acknowledges that the CAPM and RP approaches can be useful to investors in making rational decisions concerning investments. I&E St. 2 at 18.

[47] Mr. Moul also includes Middlesex Water in his DCF calculation. However, because Mr. Moul gave consideration to other methodologies in deriving his recommendations, this flaw is balanced out.

> the DSIC is usually set well above the cost of equity indicated by the DCF model alone. For example, in the Quarterly Earnings Report at Docket No. M-2021-3028488, the Commission set the DSIC return at 9.80% for the Water Companies, while the DCF returns were just 8.50% using current stock prices and 8.61% using 52-week average stock prices. It is clear that the Commission has been guided by the results of other models and other factors aside from DCF when setting the DSIC return. As an apparent check on the reasonableness of the DCF result, the CAPM result was 9.99% for the Water Company Barometer Group as calculated in the Commission's Quarterly Earnings Report dated June 30, 2021 (Docket Number M-2021-3028488).

AP St. 7 at 11.

Mr. Spadaccio derived a dividend yield for his proxy group of 1.75%, using an average of spot and a 52-week average. The result is less than Mr. Moul's dividend yield of 1.94%, based in part on Mr. Spadaccio's selection of the spot price of stock.[48]

Mr. Spadaccio relied upon five-year projected earnings growth rates for his proxy group, taken from four sources. I&E St. 2 at 23. Mr. Spadaccio used an average of all projected earnings growth rate data for his proxy group to produce a growth rate of 7.15%. I&E St. 2 at 23.

Mr. Spadaccio's inclusion of the extremely low growth rate for Middlesex Water in his calculation distorts his growth rate recommendation. In the Recommended Decision issued in *Columbia 2020*, I&E excluded a high data point from its growth rate calculation, on the basis that it was outside the norm and distorted the results. *See Pa. PUC v. Columbia Gas of Pennsylvania, Inc.*, Docket Nos. R-2020-3018835, et al., at p. 133 (Recommended Decision dated Dec. 4, 2020). Here, if Mr. Spadaccio had removed the unreasonably low 3.6% growth rate for Middlesex Water from his calculation, his growth rate would have been 7.74%.

[48] As shown on I&E Exhibit No. 2, Sch. 4, the spot prices chosen are near the 52-week high of stock prices for each of the barometer group companies.

Mr. Spadaccio also rejects Mr. Moul's leverage adjustment. Aqua PA previously addressed the propriety of Mr. Moul's leverage adjustment in Section VII.D.1.b.iii. *supra*.

As explained above, Mr. Spadaccio offered a CAPM analysis, but only as a check on his DCF results. Mr Spadaccio does not explain how his CAPM result can support his much lower DCF result. While Mr. Spadaccio's CAPM analysis presents a more reasonable result than his DCF analysis, his CAPM analysis still understates the cost rate of equity. As explained by Mr. Moul, there are three principal flaws in I&E's CAPM calculation.

First, Mr. Spadaccio incorrectly relies upon the yield of 10-year Treasury notes instead of long-term bonds, which produces a systematic understatement of the risk free rate. As Mr. Moul explained:

> This understatement can be traced to extraordinary monetary policy actions taken by the FOMC to deal with the recession that followed the onset of the COVID pandemic. Shorter-term rates, such as 10-year notes, respond more to the policy initiatives of monetary officials, while long-term rates, such as 30-year bonds, are more a reflection of investor sentiment of their required returns. For this reason, long-term rates, such as those revealed by 30-year Treasury bonds, should be used to measure the risk-free rate of return. Use of shorter-term rates, such as Mr. Spadaccio's 10-year Treasury Notes yields, are more susceptible to Fed policy actions.

AP St. 7-R at 19. Mr. Spadaccio compounds this understatement by giving the same weight to the yield on 10-year Treasury notes for the fourth quarter of 2021 and the four quarters of 2022 as he does for the entire five-year period 2023 – 2027. With the onset of substantial inflation in the later months of 2021, greater weight must be given to future projected Treasury yields. Mr. Moul demonstrates that if corrected weights were applied to Mr. Spadaccio's calculation, the resulting risk-free rate would rise to 2.8%, rather than the 1.98% used by Mr. Spadaccio. If the 30-year Treasury yields properly were considered, then the resulting risk-free rate would be 3.3%. AP St. 7-R at 20.

Second Mr. Spadaccio's CAPM calculation is understated by failing to use leverage adjusted betas. The need for a leverage adjustment is explained previously.

Third, Mr. Spadaccio's CAPM analysis is understated by failing to reflect a size adjustment. A size adjustment should be included for reasons explained in Section VII.D.1.d. of this Brief.

If only the first and third flaws were corrected, Mr. Spadaccio's CAPM result would be as follows:

	Rf	+	*β*	(	*Rm*	-	*Rf*	) +	*size*	=	*K*
Water Group	2.80%	+	0.78	(	12.14%	-	2.80%	) +	1.02%	=	11.11%

For the reason explained above, Mr. Spadaccio's recommended rate of return on common equity should be rejected. If consideration is to be given to Mr. Spadaccio's calculations, his improper DCF growth rate should be corrected, his CAPM analysis should be adjusted, and his CAPM analysis should be given weight in the recommendation.

b. OCA's Recommended Cost Of Equity Is Flawed And Should Be Given No Weight.

OCA witness Garrett recommends a cost rate for common equity of 8.0%, primarily based upon his claimed DCF results. Mr. Garrett's CAPM result is an even more unreasonable 6.4%. There are a number of serious flaws in Mr. Garrett's analysis, which produce an erroneous result that should not be relied upon.

Mr. Garrett does not specify a dividend yield for the DCF, as he presents his data in an unconventional, quarterly format. His quarterly dividend yield appears to be 0.45%, which if adjusted for four quarters would appear to produce a 1.8% dividend yield. OCA ExExhibit DJG-4. However, based upon his recommended DCF result of 8%, and his growth rate of 6.31%, it

would appear his implied dividend yield is 1.69%. The latter result does not appear to be supported, and should be disregarded.

OCA's growth rate recommendation of 6.31% appears to be derived from one of Mr. Moul's growth rate sources, I/B/E/S First Call. OCA Exhibit DJG-5. This is the lowest of the earnings per share growth rates presented by Mr. Moul. This is clearly an improper downward bias in Mr. Garrett's recommendation, that is driven by his actual position endorsing a growth rate range of 2% to 4%. AP St. 7-R at 15.

Mr. Garrett's position on the growth rate for utilities is based upon his stated belief that a regulated utility will grow at a rate that is less than the U.S. economic growth rate. OCA St. 3 at 32. From this position, he concludes that Aqua's terminal growth rate is likely between 2% and 4%. OCA St. 3 at 33. Mr. Moul explained the numerous flaws with this approach to deriving a DCF growth rate, which require the rejection of Mr. Garrett's DCF calculation:

> Mr. Garrett indicates that his method for analyzing the growth rate component rests on: (i) nominal GDP, (ii) real GDP, (iii) inflation, and (iv) the risk-free rate. There are many problems with his approach. First, the combination of the real GDP growth and inflation equals nominal GDP, i.e. (1.018) * (1.020) = (1.0380 -1) = 3.8%. Hence, two of his input variables are double counted when he separately considers nominal GDP growth. Second, the risk-free rate provides no guide of the growth that a company can realize in its earnings. Earnings growth occurs through revenue growth, net of: O&M, depreciation, taxes, and interest. None of these factors are addressed with the risk-free rate of return. Third, Mr. Garrett is essentially developing a generic growth rate that would apply to any, or all companies, whether they are regulated or non-regulated companies. We all know that each company has a unique company-specific growth rate. His approach is simply incompatible with the basic concept of the DCF, where future cash flows for each company are systematic related to one another by a constant growth rate. It is also incompatible with the use of the growth rates of a comparable barometer group of companies to meet the requirement that a utility is to be permitted to earn a return equal to comparable companies. Remember, the DCF

> equation is P = D / (k-g). Mr. Garrett's growth rate does not fit within this equation.

AP St. 7-R at 14-15.

Mr. Garrett's CAPM analysis produces results so low as to be demonstrably unjustified, with a range of 4.9% (barely above Aqua PA's embedded debt cost) to 6.4%. OCA St. 3 at 47-48. The errors in Mr. Garrett's analysis include the use of backward-looking yields on 30-year Treasury bonds to derive his risk-free rate, and an irrationally low equity risk premium ("ERP") derived from an unjustified projection of total market returns of less than 8%. As Mr. Moul testified:

> Second, the 5.5% equity risk premium ("ERP") selected by Mr. Garrett is completely off the mark. As one input to his analysis, Mr. Garrett calculated a 7.0% "Required Return on Market" that is less than the 8.0% DCF return that he calculates for his Water Group. It is inconceivable that the total market return associated with a beta of 1.0 could be less than the return for the Water Group that has a beta of 0.794 according to Mr. Garrett. His total market return is just not credible.
>
> Mr. Spadaccio's data leads to an ERP of 10.16% (12.14% - 1.98%), and I determined an 9.00% ERP. Furthermore, the implied total market return using Mr. Garrett's final inputs is just 7.52% (2.02% + 5.5%), which is clearly incompatible with actual stock market returns of 18.40% in 2020, 16.21% YTD in 2021, and 12.16% on average for the past 95 years (1926-2020).

AP St. 7-R at 23. OCA's CAPM analysis should be disregarded.

3. Increment For Management Effectiveness.

Aqua PA has demonstrated strong performance in the area of management effectiveness, which should be recognized by the Commission through an appropriate addition to the cost of common equity.

Under the Public Utility Code, the Commission is required to consider management effectiveness in setting rates. Section 523 of the Public Utility Code provides:

> The commission shall consider, in addition to all other relevant evidence of record, the efficiency, effectiveness and adequacy of service of each utility when determining just and reasonable rates under this title. On the basis of the commission's consideration of such evidence, it shall give effect to this section by making such adjustments to specific components of the utility's claimed cost of service as it may determine to be proper and appropriate. Any adjustment made under this section shall be made on the basis of specific findings upon evidence of record, which findings shall be set forth explicitly, together with their underlying rationale, in the final order of the commission.

66 Pa.C.S. § 523(a) (emphasis added). In addition, the Commission has, where appropriate, included an incremental upward adjustment to the cost of common equity to reflect management effectiveness. *See, e.g.*, *UGI Electric*, at p. 119; *PPL Electric 2012*, at pp. 98-99; *Aqua 2008*, at *63; *Pa. PUC v. West Penn Power Co.*, Docket Nos. R-00942986, et al., 1994 Pa. PUC LEXIS 144, *147 (Order dated Dec. 29, 1994). The Commission granted Aqua PA a 22 basis point increment for superior management performance in its 2008 rate case. In its Order, the Commission recognized the Company's evidence that it had complied with all Federal and State primary drinking water standards, had "minimal" taste and odor water quality complaints, took a leadership role in solving regional water supply problems, had undertaken a major infrastructure rehabilitation program, had a robust customer assistance program and had a long history of exemplary community involvement. AP St. 1-R at 29.

Nothing in Section 523 of the Public Utility Code requires a finding that a utility must outperform all other utilities in the Commonwealth or that a utility's programs not be funded by customers before it is eligible for an increment to the rate of return for management performance.

a. Evidence Of Aqua PA's Management Effectiveness.

Aqua PA's own goal is to continuously seek ways to provide better service at reasonable cost. It is committed to providing safe and reasonable service, for the benefit of the communities it serves and the environment. Aqua PA continues to help the Commonwealth deal with the

problems created by small, troubled or non-viable water and wastewater systems. Aqua PA has presented substantial evidence as to its management performance, as summarized below.

i. Water Quality.

Aqua PA has a strong focus on water quality. Aqua provides filtration for all surface water sources and disinfection for all ground water sources, and where necessary provides specialized treatment for specific contaminants. Managing emerging contaminants is a continuous process, as the Company constantly improves its ability to test and treat for existing and newly developed chemicals. For example, Aqua has announced that it is committed to installing mitigation technology at its water treatment facilities where sources of supply exceed 13 parts per trillion ("ppt") for any per and poly-fluoro-alklyl substances ("PFAS"). This standard is well below the United States Environmental Protection Agency's health advisor level of 70 ppt. AP St. 1 at 33.

To manage and maintain water quality standards, Aqua PA operates a central water quality laboratory in Bryn Mawr, which conducts hundreds of thousands of tests annually on water samples from its diverse systems across Pennsylvania. The laboratory has testing equipment capable of detecting contaminants down to the part per trillion level. The Company maintains a Technical Services Department at the laboratory, with the staff and resources available to promptly investigate and respond to water quality issues. AP St. 1 at 33-34.

ii. Wastewater Treatment Compliance.

Aqua has been growing its wastewater services for over 20 years, through the acquisition of various systems, many in need of substantial improvements. Its access to capital has allowed it to undertake, where needed, larger-scale treatment plant upgrades that were beyond the reach of prior owners/operators. Its deep experience has allowed Aqua PA to handle challenges such as industrial waste pretreatment and combined sewer systems. AP St. 1 at 34.

iii. System Reliability.

Aqua's goal is to achieve 24-hour per day uninterrupted service to customers. Extraordinary circumstances can make this a challenge. For example, this past fall, the extreme flooding from the remnants of Hurricane Ida substantially destroyed the wastewater treatment plant of North Heidelberg Sewer Company, which Aqua PA has been operating as a Receiver. Aqua PA immediately implemented a raw wastewater pump and haul operation to avert environmental harm and to protect downstream drinking water supplies. Aqua PA also received Commission authority to undertake significant reconstruction efforts that go beyond the normal scope of remediation by a Receiver. *Pa PUC v. North Heidelberg Sewer Company*, Docket No. M-2018-2645983 (Order entered October 7, 2021). Aqua PA has undertaken numerous proactive measures in furtherance of this goal, as described by Aqua PA witness Mr. Packer. AP St. 1 at 35-36.

iv. Cost Containment.

Aqua PA continually looks for ways to control operating costs. There has been a conscious effort by management to review staffing needs and operating procedures with the purpose of improving service while controlling costs. To this end, Aqua PA reviews its workforce complement and cost drivers on a consistent basis. Aqua PA's efforts have produced the result of a less than 1.5% compound annual growth rate in O&M expense since its last water rate case. Further, Aqua PA has proactively taken advantage of refinancing opportunities and lowered interest rates on its long-term debt from a weighted cost of 8.5% at year-end 1994 to 4.00% as proposed in this filing. AP St. 1 at 37.

v. Rates.

Aqua PA is the second largest water and wastewater utility in the Commonwealth. Through the support provided by the longstanding policies of the Commission regarding single

tariff pricing, regionalization and consolidation, and a well-regarded regulatory compact, Aqua PA has been able leverage its size and operational abilities to develop rates that are just and reasonable. At the same time, the Company is able to prudently invest needed capital in the utility infrastructure serving its customers. AP St. 1 at 37.

vi. COVID-19 Response.

The COVID-19 pandemic tested the Company in 2020. The Company successfully continued to provide an essential service during the pandemic, without any interruption of service, while providing a safe workplace for its essential employees. AP St. 1 at 37-38.

Aqua PA also proactively implemented changes to its low-income program and policies to help customers who may have been impacted by the pandemic. In addition to providing credits to low-income customers impacted by the pandemic, the Company increased flexibility for its Helping Hand program and in regard to payment arrangements. AP St. 1 at 38.

Aqua PA also assisted other water and wastewater systems during the pandemic. Through requests made by Pennsylvania's Water/Wastewater Agency Response Network ("PaWARN"), Aqua PA made deliveries of masks to the Chester Water Authority and Philadelphia Water Department, and coordinated requests and pickups for masks at its Willow Grove and Springfield Operation Centers. Aqua PA helped PaWARN distribute over 50,000 face masks to Pennsylvania's Water/Wastewater sector during the pandemic. In fact, PaWARN thanked and named Aqua PA water and wastewater utility personnel in helping Pennsylvania's Southeast Region, including the City of Philadelphia, be better protected against COVID-19. AP St. 1 at 38.

vii. Customer Service.

For many years, Aqua PA has provided its customers with a high level of customer service, and the Company continues to examine ways to improve service to customers.

For example, Aqua PA recently rolled out technology designed to improve customers' ability to be advised of, and track, service disruptions. A disruption to our customers includes anytime the quality, pressure, or quantity of their service is impacted, whether it be planned, through a main replacement project, or unplanned. The new process will display disruptions on Aqua PA's external website, with an interactive map. The new map will allow customers to see activity in their service area by simply entering a street address, city, zip code, or by using their smart phone's location. The map website will be updated every hour to provide our customers with the latest updates on disruptions to their service. AP St. 1 at 38-39.

Aqua PA also is implementing a new business software platform known as SAP. SAP is already in use by Aqua PA's gas company affiliates, the Peoples Companies. SAP will provide an integrated service platform, not currently available with Aqua PA's current multiple software systems, that will further improve customer service, network reliability and safety. AP St. 1 at 27.

viii. Acquisition Of Troubled Or Weaker Water And Wastewater Systems.

In the last twenty years, Aqua PA has acquired many community water systems previously owned and operated by entities within the public and private (private investor-owned or homeowners' associations) sectors. Several of these systems were included on the Commission's troubled water company list, and a majority, if not all of those systems, served less than 3,300 connections and exhibited problems that would have also qualified them to be included on the Commission's list. Upon acquiring these troubled systems, Aqua PA made immediate improvements in quality, supply and customer service. AP St. 1 at 39.

The regionalization of water and wastewater systems allows for consistent, reliable service, which, in turn, improves the economics and quality of life of the regions the Company

serves. Aqua PA intends to continue to acquire systems within its existing 32-county service area in Pennsylvania as well as adjacent areas in order to provide solutions to the long-term water supply and wastewater treatment requirements in Pennsylvania. AP St. 1 at 40.

In addition to the acquisition of troubled and weaker water system, the Company has agreed to be the receiver for other troubled water systems under the provisions of Section 529 of the Public Utility Code. Currently, the Company is serving as receiver for North Heidelberg Sewer Company, Twin Lakes Utilities, Inc., and James Black Water Service Company (Belle Aire Acres). AP St. 1 at 40.

ix. A Helping Hand – Low-Income Customer Assistance Program.

Aqua PA implemented a program in 1994 designed to facilitate the payment of water bills by its low-income residential customers. This program is called "A Helping Hand." It was the first program of its kind offered by any investor-owned water utility in Pennsylvania and has been looked at as a model by other utilities. This program provides water audits, and the partial monthly forgiveness of prior arrearages or a grant. In the current proceeding, Aqua PA has carefully designed a more comprehensive approach to address affordability for low income customers. The details of this new program are provided in Section VIII.A. of this Brief.

x. Infrastructure Rehabilitation.

Twenty-five years ago, Aqua PA embarked on a substantial capital program intended to ensure long-term viability of its underground piping infrastructure through significant annual investments in infrastructure rehabilitation through main replacements. At its previous pace of main replacement, Aqua PA was on a schedule to rehabilitate its aging system over approximately 1,000 years. Recognizing that the life of a pipe approximated 100 years, it was imperative that the infrastructure that was installed during Aqua PA's first 100 years of service

be replaced during its second 100 years of service. Since that time, Aqua PA has dramatically increased its infrastructure rehabilitation program to remove and replace aging pipe and associated valves and services. Through these efforts, Aqua PA has positioned itself well to ensure continuity of service through a sound utility infrastructure. AP St. 1 at 41.

xi. Tax Programs.

Aqua PA takes advantage of key tax programs to ensure the lowest possible cost of service for its customers. Over the years, Aqua PA has continually taken advantage of bonus tax depreciation whenever it was available to generate key tax savings, which are then incorporated into its base rate calculations to reflect the associated tax-book timing difference as a source of cost-free capital to support Aqua PA's infrastructure capital investments. In addition, consistent with the terms of the settlement of the 2018 Base Rate Case, Aqua PA is using tax repair deductions and flow-through accounting to reduce its effective tax rate in this case and provide significant current benefits to its customers. AP St. 1 at 41.

xii. Environmental Initiatives.

As a purveyor of a consumable product, Aqua PA is well aware of the importance of being a steward of the environment. Cleaner raw water supplies require less treatment, which saves money in the future.

Energy continues to be the single biggest purchased expense that Aqua PA manages. To minimize its purchased power costs and improve its carbon footprint, Aqua PA considers the Green House Gas ("GHG") composition of a given energy supply when procuring power in addition to power cost. Over the last several years, Aqua PA has been able to lower its power costs and reduce it carbon footprint though active bidding. From 2020 to 2022, Aqua PA is able save $600,000 dollars annually in electric supply costs, and in 2022 the Company's supplied power will be 100% renewable. Future contracts will be approached in the same manner, and

Aqua PA will continue to actively bid contracts and secure 100% renewable energy to support the reduction of the Company's carbon footprint. Some examples of the Company's efforts to reduce its carbon footprint, while producing savings for customers, include:

- Aqua PA has operated two solar fields since 2011, which produce enough power annually to power over 300 homes, reducing the Company's need to purchase power by 8% at our Ingram's Mills and Pickering Water Plant complexes in Southeast PA. With the increased value in the last two years of Pennsylvania Solar Renewable Energy Certificates ("PA SRECs"), the sale of generated SRECs from solar energy production offsets the required O&M costs of the solar fields to allow operations to be financially self-sustaining.

- Aqua PA has used Compressed Natural Gas ("CNG") as a vehicle fuel for its heavy duty fleet, which provides for a lower carbon energy source at a lower cost. CNG accounts for over 25% of miles driven by the Company's heavy-duty fleet.

- Through the use of innovative dashboard tools, metrics on energy intensity by individual asset and system can be analyzed for energy related trends and for comparison to like assets to identify energy outliers. This process is already paying dividends as asset rehabilitation is being prioritized by the magnitude for energy improvement. Not only does this prioritized rehabilitation produce energy savings, but utility energy efficiency rebates received from rehabilitation of assets helps offset project costs. For example, a recent effort at the Hall Road Well Station in 2020 resulted in savings of near $30,000 annually in electric costs, along with a $21,000 energy efficiency rebate from PECO Energy Company.

- Aqua PA continues to participate in electrical Peak Reduction programs. During peak energy usage periods, the Company reduced its demand load on the Grid by 3-Megawatts at eight water treatment plant across the state, which helped to stabilize the electrical grid during peak events and also provides a financial inventive though performance payments and the ability to obtain low cost of electricity in the future.

AP St. 1 at 42-43.

Aqua PA's wastewater treatment plant in Upper Providence Township, Delaware County received the Phase III Directors Award from the Partnership for Clean Water, a global optimization and recognition program for wastewater utilities developed by the American Water Works Association ("AWWA") and other organizations to guide wastewater utilities towards preserving environmental water quality by optimizing system operations. This wastewater plant, which provides wastewater service to the Borough of Media, is the tenth wastewater treatment

plant in the country and the first in Pennsylvania to achieve this recognition. More than 55 utility subscribers are committed to the Partnership for Clean Water's goals of protecting public health by optimizing wastewater system operations and achieving operational excellence in wastewater treatment. Partnership members participate in a rigorous self-assessment and peer-review process developed by wastewater utility optimization experts and are recognized for their commitment to protecting public health for their communities.

All of Aqua PA's surface water treatment plants in Pennsylvania are enrolled in the Partnership for Safe Water, a program developed by the U.S. Environmental Protection Agency, AWWA and other organizations to guide water utilities towards improving drinking water quality by optimizing system operations. Four of Aqua PA's surface water treatment plants have achieved Phase III Directors Award or higher partnership honors. AWWA is the largest organization of water supply professionals in the world. AP St. 1 at 44-45.

Aqua PA made its first disclosure of its climate impact in August 2018 and in 2020 the Company improved its rating to a B-, through the internationally based CDP in disclosing climate risks and impacts. The CDP disclosure process provides the Company with the framework to reduce our energy demand and environmental impact in a cost prudent manner. AP St. 1 at 43.

b. Other Parties' Objections To Any Allowance For Management Effectiveness Should Be Rejected

Several parties oppose any allowance for management effectiveness. These arguments are without merit and should be rejected.

I&E has a basic opposition to any recognition in the rate of return for management effectiveness. Mr. Spadaccio states:

> Ultimately, as alluded to above, true management effectiveness is earning a higher return through its efficient use of resources and

> cost cutting measures. The greater net income resulting from cost savings and true efficiency in management and operations is available to be passed on to both ratepayers and shareholders. I do not believe Aqua PA, or any utility should be gifted additional basis points for doing what they are required to do to provide adequate, efficient, safe, and reasonable service under 66 Pa.C.S.A. § 1501.
>
> For these reasons, I recommend that any addition of basis points to the cost of equity for management performance be disallowed.

I&E St. 2 at 53. OCA expresses similar opposition. OCA St. 3 at 53. However, as explained previously, I&E's and OCA's positions are contrary to Section 523 of the Public Utility Code and numerous Commission decisions. As Aqua witness Mr. Packer observed:

> In PPL Electric's 2012 case, the OCA also argued that "all regulated utilities are required to provide safe, adequate, reasonable and efficient service as a matter of law" and "a utility must be doing more than providing efficient and reasonable service in order to receive more than the indicated rate of return" (PPL Order, p. 95). Similarly, in UGI Electric's 2017 case, I&E contended – like Mr. Spadaccio and Mr. Garrett here – that no utility should reap additional rewards for programs funded by customers or for meeting the company's statutory obligation to provide safe and reliable service (UGI Order, p. 111). The Commission rejected I&E's and the OCA's position in the PPL and UGI Electric rate cases, and it should do the same in this case.

AP St. 1-R at 28. Moreover, the other parties fail to recognize the separate basis for performance recognition for water and wastewater companies:

> The witnesses do not acknowledge the Company's eligibility for performance factor recognition under the Commission's Policy Statement at 52 Pa. Code § 69.711(b)(1). Notwithstanding their erroneous position with regard to Section 523, the Company certainly has demonstrated that its performance deserved recognition based on the Company's long history of aggressively implementing the Commission's and DEP's policies to continuously address troubled water and wastewater systems and upgrading the facilities in those systems to furnish safe and reliable service.

AP St. 1-R at 29-30.

Several witnesses for OCA seek to disparage Aqua PA's management effectiveness by pointing to instances in which Aqua PA's efforts may not have been top in class. However, the Commission has never employed a standard that limits recognition to only companies with leading performance in every possible measure. Indeed, such a standard would effectively write Section 523 of the Public Utility Code out of existence, as no utility could be expected to be perfect in every conceivable measure.

Various claims of suboptimal performance do not present a full or accurate description. For example, OCA witness Colton commented on Aqua PA's justified complaint rate in 2020 and 2021. However, as explained by Company witness Ms. Black, Mr. Colton's observations lack critical context:

> I think it's important to recognize that an increase in the number of complaints is not an indicator of overall performance of a utility in responding to customer concerns. The number of complaints in 2021 over 2020 generally increased across all utilities. For major natural gas companies, the number of residential consumer complaints increased by 42% while the number of residential payment arrangement requests increased by 209%. For major water utilities, there was a 38% increase in residential consumer complaints and 69% increase in residential payment arrangement requests. Major electric utilities experienced the same increases with 27% more residential consumer complaints in 2021 over 2020 and a 270% increase in residential payment arrangement requests. As collection activities returned to more normal procedures in 2021, the number of cases across all utility types went up as we would expect following the impacts of the pandemic in 2020. I think the most important aspect to consider when we are discussing management performance relates to how many of the complaints received by the PUC were considered, by the PUC's standard, as justified complaints. As noted by Mr. Colton, Aqua PA's justified complaint was significantly reduced from 15% to 10%.

AP St. 10-R at 22-23.

Mr. Colton also identified four events in 2020 and 2021 in which DEP identified National Pollutant Discharge Elimination System ("NPDES") permit violations by Aqua PA facilities.

However, OCA's criticism of less than perfection is unfair and improper. Violations may occur due to extreme weather events and aging infrastructure acquired by Aqua PA. Aqua PA achieved a compliance rate of over 95% for its wastewater systems in 2020, and a compliance rate of 99.24% for the nine months ended September 30, 2021. AP St. 9-R at 40. Further, Aqua PA witness Duerr explained that in three of those instances, prompt efforts were undertaken by the Company to install new equipment to resolve the concerns. The fourth instance may have been an exceedance due to a by-product of cancer treatment by an unidentified resident that passed into the system. AP St. 9-R at 41. The Company will further address quality of service issues raised by OCA witnesses later in this Brief. *See* Section VIII.B. *infra.*

For these reasons, other parties' contentions that Aqua PA should receive no recognition for management effectiveness in the rate of return are incorrect and should be rejected.

E. CONCLUSION AS TO RATE OF RETURN

Aqua PA has an ongoing need to raise capital at reasonable cost rates to support its ongoing infrastructure replacement program. Proposals to employ a hypothetical capital structure, and to adopt cost rates for common equity well below levels seen in modern regulatory times will work in opposition to that need. The Commission should continue to support the funding of accelerated infrastructure improvement and the continued provision of high-quality water service by adopting Aqua PA's actual capital structure and its proposed cost rate of common equity of 10.75%.

VIII. <u>MISCELLANEOUS ISSUES</u>

A. UNIVERSAL SERVICE ISSUES

1. Introduction.

Aqua PA is a strong supporter of USPs and is committed to helping ensure that bills are affordable for the Company's low-income customers. Several years ago, Aqua PA implemented

a program called "A Helping Hand" to facilitate the payment of water and wastewater bills by its low-income residential customers. Helping Hand is "a program designed to help limited-income customers with arrearages to reduce the amount they owe through regular monthly payments." AP St. 10 at 4. Under the program, "[f]or each timely payment made, participants receive a $25 credit towards their prior arrearage." AP St. 10 at 4. However, Helping Hand does not provide a discount or Percentage of Income Payment Plan ("PIP") and, therefore, it would not be considered a CAP, as that term is normally understood. AP St. 10 at 4. In addition, Helping Hand offers a conservation program, but does not include an Emergency Repair Program. AP St. 10 at 5. Aqua PA has engaged in substantial outreach to its customers to promote this program over the years.

Prior to this proceeding, Aqua PA made certain commitments regarding its existing Helping Hand program and the evaluation and development of a more comprehensive USP as a part of the Commission's approval of the acquisition of the Peoples Companies by Essential Utilities, Inc., *f/k/a* Aqua America, Inc.[49] In the settlement agreement approved by the Commission in the *Aqua-Peoples Acquisition Order*,[50] it was agreed that:

> 108. Aqua PA will include in the Helping Hand collaborative agreed to in its recent rate case settlement at Docket No. R-2018-3003558, discussion of the development of a comprehensive universal service and conservation program that will be proposed by Aqua PA. The items to be evaluated for inclusion in Aqua PA's proposal include: (1) a bill payment/customer assistance program; (2) a hardship fund; (3) a water conservation program; (4) a low income service repair line and replacement program; and (5) a comparable funding mechanism that exists for electric and gas utilities in Pennsylvania. Aqua PA will submit a rate recoverable universal service proposal in Aqua PA's next base rate case that

[49] *Aqua-Peoples Acquisition Order*.

[50] Docket Nos. A-2018-3006061, A-2018-3006062 and A-2018-3006063 (Joint Petition for Approval of Nonunanimous, Complete Settlement Among Most Parties dated June 26, 2019) ("*Aqua-Peoples Settlement*").

> considers the best practices learned from the Peoples Companies and through conversations from the Helping Hand collaborative.

See Aqua-Peoples Settlement at ¶ 108. Furthermore, public utilities are authorized under the Code and the Commission's regulations to develop and implement a USP. *See generally* 66 Pa.C.S. §§ 1401-1418; *see also* 52 Pa. Code § 69.265.

The leader of Aqua PA's USP efforts, and in particular the lead in undertaking the evaluation and developing the programs set forth in the foregoing settlement provision, is Ms. Rita Black. Ms. Black is the Director of Community Assistance Programs of Essential Utilities. In this role, Ms. Black leads the customer assistance efforts for Aqua PA, as well as the customer assistance programs for Peoples Natural Gas Company LLC and Peoples Gas Company LLC (collectively, the "Peoples Companies") and the affiliated regulated utilities operating in other states. AP St. 10 at 1. Ms. Black brings a wealth of experience in her role as Director of Community Assistance Programs. Previously, for the Peoples Companies, she was responsible for developing and administering the Universal Service Rider and preparation of the Universal Service Energy and Conservation Plan ("USECP"). Since 2014, she has been responsible for oversight of all low-income programming for the Peoples Companies, including their CAP, Low Income Usage Reduction Program ("LIURP"), Emergency Repair Program, Hardship Fund and Customer Assistance, Referral and Evaluation Services ("CARES"). AP St. 10 at 1-2.

As explained by Aqua PA witness Ms. Black, "through the Helping Hand Collaborative process, Aqua PA was to consider development of a comprehensive universal service and conservation program." AP St. 10 at 3. Following this evaluation, Aqua PA would propose a recoverable USP as a part of its next base rate proceeding following the *Aqua-Peoples Acquisition Order.* The Company presented the detailed plan to the Helping Hand Collaborative prior to filing in this base rate case and utilized the best practices from the Peoples Companies.

AP St. 10 at 3. The proposed USP included a rate rider to recover various program costs. Use of a rate rider facilitates transparency, more directly encourages the promotion of the program, and is a recognized rate recovery method approved by the Commission. The Company's proposal is a comprehensive, robust and transparent universal service program and this approach was vetted and agreed to in the *Aqua-Peoples Acquisition Order*.

Ms. Black's initial review of Helping Hand revealed additional opportunities to assist more low-income customers served by Aqua PA. She explained that:

> Helping Hand is a long-standing program that provides both a hardship grant component for those who face potential loss of service due to arrears, as well as a monthly arrearage reduction benefit of $25. These two components, *i.e.,* hardship and arrearage reduction, are important keys to maintaining affordable utility service. <u>To further improve affordability, adding a monthly payment reduction component, such as a CAP discount model, can greatly benefit low-income households</u>.
>
> Helping Hand also provides conservation support through kits that can assist customers reduce their ongoing water usage, which will help control monthly bills. In addition to conservation measures, Aqua PA determined that it should also consider the negative impact of leaks that can occur. A leaking toilet, for example, can use a large amount of water if the leak is not resolved in a timely fashion. Low-income households often do not have the funds to make needed repairs and find themselves facing large utility bills as a result. <u>Adding an Emergency Repair Program can provide a valuable safety net for these households</u>.

AP St. 10 at 5-6 (emphasis added).

In consideration of these opportunities, and in compliance with its commitments in the *Aqua-Peoples Settlement*, Aqua PA has proposed to implement a CAP that builds upon the successful aspects of Helping Hand in order to further assist low-income customers throughout its service territory. *See* AP St. 10 at 5-8. As more fully explained below, the proposed CAP adds tiered bill discount benefits and an Emergency Repair Program to the benefits already afforded under Helping Hand. In addition, Aqua PA's proposals regarding its USP consider and

reasonably incorporate the best practices of the Peoples Companies. Finally, Aqua PA proposed to recover costs of implementing the CAP through a USR that is similar to the riders in place at the Peoples Companies and other energy utilities throughout the state. These riders track participation and associated related costs and allow for greater transparency of this data between base rate case filings.

2. Aqua PA's Proposed CAP Should Be Approved.

Aqua PA's proposed CAP will be available to both water and wastewater customers. AP St. 10 at 7. The CAP is intended to "build upon the successful aspects of Helping Hand by adding additional measures to improve overall affordability." AP St. 10 at 8. The CAP program will replace Helping Hand, and Aqua PA intends to provide outreach to current Helping Hand participants to explain the expanded benefits of the new program and encourage them to enroll. AP St. 10 at 8; AP St. 10-R at 2.

One of the primary functions of the Company's proposed CAP is to provide tiered bill discounts and bill credits (arrearage forgiveness) for timely CAP payments to low-income customers, in order to tackle household water and wastewater affordability. AP St. 10 at 7. Aqua PA based the structure of its bill discount benefits on a needs assessment of its service territory. AP St. 10 at 6-7; *see also* AP Exhibit RFB-1. Company witness Ms. Black explained that:

> Census data by county was used to identify those households with incomes at or below 200% of Federal Poverty Level ("FPL") as the benchmark. A 200% FPL was utilized as this is the current eligibility guideline for Helping Hand. The Companies then included the number of residential households Aqua PA serves in each of those counties to determine the projected number of households that may have difficulty with utility bills.

AP St. 10 at 6. After determining the number of households in its service territory that may be eligible for its CAP, Aqua PA then considered what "affordability" meant in the context of water and wastewater service. Ms. Black explained:

> The United States Environmental Protection Agency ("EPA"), more than 20 years ago, provided a guideline that average combined water and wastewater bills that were less than 4 to 4.5% of the median income of a household were considered affordable. However, the EPA's guideline did not consider the impact of water and wastewater bills for those living below median income. To gain more information on current trends in affordability determination, I reviewed the work of Roger Colton as commissioned by The Guardian. Mr. Colton studied 12 American cities in an effort to better understand the breadth and impacts of water poverty.[] He used cities that have diverse populations, geography and poverty levels. Mr. Colton concluded that to be considered affordable, water and wastewater bills should not exceed 4% of a household's monthly income and that for lower income levels, such as income below 49% FPL, bills should not exceed 3% of household income.

AP St. 10 at 6-7.

Based upon its analysis of its service territory, and its consideration of affordability for water and wastewater service, Aqua PA proposed a "tiered structure that provides the largest benefit to those with the least income." AP St. 10 at 7. Importantly, and consistent with its commitment to utilize the best practices of the Peoples Companies in developing a CAP, "[t]his tiered structure is similar to the structure in place at the Peoples Companies." AP St. 10 at 7. The proposed three tiers are set at 100% FPL, 150% FPL and 200% FPL; the highest level of discounts are provided to those in the first tier and gradually reduce the discounts in the other tiers. AP St. 10 at 7. Aqua PA Exhibit RFB-2 sets forth the discounts to the Base Facility Customer Charge and Consumption Charge that an enrollee can obtain based upon their income tier, as follows:

WATER	WASTEWATER
Base Facility Customer Charge: Tiers 1-3: $0 **100% discount on fixed**	Base Facility Customer Charge: Tier 1: **75% discount on fixed** Tier 2: **65% discount on fixed** Tier 3: **50% discount on fixed**
Consumption Charge: **100% discount on consumption of first 2k gallons** for residential water customers at or below 100% FPL. **50% discount on consumption of first 2k gallons** for residential water customers with incomes between 101 and 150% FPL. **0% discount on consumption** for residential water customers with incomes between 151% and 200% FPL.	Consumption Charge: **100% discount on consumption of first 2k gallons** for residential water customers at or below 100% FPL. **50% discount on consumption of first 2k gallons** for residential water customers with incomes between 101 and 150% FPL. **0% discount on consumption** for residential water customers with incomes between 151 and 200% FPL.

Aqua PA's CAP also retains the Helping Hand arrearage benefit credit of $25 a month when timely CAP payments are made. AP St. 10 at 7.

To put the robust nature of the proposal in context, a Tier 1 low income customer with an average usage of 4,000 gallons per month would pay $31.94 under proposed rates, a 61% total discount. For wastewater, a Tier 1 low income wastewater customer that is in Rate Zone 1 would pay $28.97 (63% discount), Rate Zone 2 would pay $35.99 (64% discount) and Rate Zone 3, which includes Tobyhanna, Lake Harmony, and Honeycroft systems, would pay $43.13 (66% discount).

In addition to the proposed bill discount benefits, Aqua PA also proposed to include an Emergency Repair Program as a part of its CAP. AP St. 10 at 8. This program involves a $100,000 annual budget for the provision of conservation kits to decrease customers' overall water usage, as well as an emergency component for customers with leaks requiring repair. AP St. 10 at 8. Ms. Black explained the role and benefits of this aspect of the CAP as follows:

> For a non-low-income homeowner, a leaking toilet or faucet means a call to a plumber to resolve the problem in a timely manner. However, low-income homeowners often do not have the funds available to manage even a small emergency such as a plumbing repair. As a result, minor leaks continue for a long time, wasting water and driving up water and wastewater bills. The higher bills can, in turn, cause more payment difficulty for the household. An Emergency Repair Program, similar to the program offered by the Peoples Companies for its low-income households that face gas

> line repairs and heating appliance failures, can be a critical safety net. With an Emergency Repair Program, low- income homeowners that contact Aqua PA about their bill and identify an ongoing leak can obtain assistance with the cost of the repair.

AP St. 10 at 8.

Ms. Black further explained how the proposed program design satisfies Aqua PA's commitments under the *Aqua-Peoples Settlement* to utilize the best practices of the Peoples Companies. AP St. 10 at 11-12. In particular, Aqua PA proposed to utilize a tiered model similar to the model in place at the Peoples Companies. AP St. 10 at 11.[51] Aqua PA's program also offers a conservation and Emergency Repair Program component that is similar to the conservation program utilized by the Peoples Companies (*i.e.*, the Low-Income Usage Reduction Program and its Emergency Repair Program). AP St. 10 at 11-12.

Going forward, Aqua PA further explained that it will utilize the best practices of the Peoples Companies "related to outreach and education of consumers, and practices related to collaboration with social service agencies as well as other interested parties." AP St. 10 at 12. Ms. Black explained:

> An outreach and education plan that incorporates both broad messaging and targeted efforts will provide a comprehensive approach to enrolling customers into the CAP program. Broad messaging increases awareness to customers who may need the program or may know someone who does. Targeted efforts are designed to locate those who are most in need of the programs. Broad messaging at the Peoples Companies includes bill inserts and website information, while targeted efforts can include targeting school districts with a high percentage of free and reduced lunch participants for flyers and handouts. Collaboration with social service agencies and interested parties has been very beneficial to the Peoples Companies. The Peoples Companies' Universal Service Advisory Group ("USAG") meets quarterly and the input gained from these sessions has led to improved outreach

[51] Aqua PA proposed to use three tiers, instead of 4 tiers, to streamline the tiers and ensure those with the lowest income receive the most benefit. AP St. 10 at 11. The Company further justified its basis for the use of three, rather than four, tiers in its rebuttal testimony. AP St. 10-R at 11.

> materials, changes to customer communications and has increased awareness of the Peoples Companies' programs in the communities they serve. Building on the existing Helping Hand Collaborative by incorporating the Peoples Companies' model, Aqua PA can further its efforts in this area as well. Meetings can be held quarterly and provide not only an update on program participation, but further develop its collaborative nature through adding participation from local social service agencies and an increased focus on outreach activities.

AP St. 10 at 12. Aqua PA further proposed to use Dollar Energy Fund to administer the proposed CAP, which is the same administrator with the same enrollment model used by the Peoples Companies. AP St. 10 at 13.

Finally, Aqua PA explained that it obtained input from stakeholders via the Helping Hand Collaborative consistent with its commitment in the *Aqua-Peoples Settlement*. AP St. 10 at 13. At its May 19, 2021 Helping Hand Collaborative, the Company presented an overview of its CAP proposal to seek input from stakeholders. AP St. 10 at 13. The CAP proposal included recovery of costs through a rate rider. While participants noted that the tiered benefits were an important part of the design, no changes to the Company's proposal were recommended at that time. AP St. 10 at 13.

3. Other Parties' Proposals Regarding The CAP.

I&E, OCA and CAUSE-PA made several recommendations regarding the Company's proposed CAP. As explained below and in the Company's testimony, except in the circumstances where these proposals are accepted, the other parties' proposed modifications to the CAP should be denied.

As an initial matter, Aqua PA opposes CAUSE-PA's recommendation that the proposed CAP be implemented as a pilot program. CAUSE-PA St. 1 at 41-42. Implementing the CAP as a pilot program would make it more difficult to promote to customers and would also place participants at risk of a loss of benefits if it were discontinued. AP St. 10-R at 7. Contrary to the

concerns raised by CAUSE-PA, implementing the CAP as a permanent program would not preclude revisions or modifications to the program based upon actual experience in future years. AP St. 10-R at 7. Rather, Aqua PA would monitor performance and look for opportunities to improve the benefits, processes and other aspects of the program throughout its lifetime. In surrebuttal, CAUSE-PA revised its position to argue that "the *structure* of Aqua's CAP be implemented on an interim basis." CAUSE-PA St. 1-SR at 6. Again, as explained above, implementing the Company's proposed CAP does not preclude future revisions or modifications in the future. CAPs for other utilities are constantly being reviewed in rate case and USECP filings, without designating the programs as "pilots" or "interim."

OCA and CAUSE-PA both recommended a streamlined application process for existing Helping Hand participants to participate in the proposed CAP. OCA St. 5 at 62; CAUSE-PA St. 1 at 46-47. However, Aqua PA explained that the lack of an automatic enrollment in CAP for existing Helping Hand customers is needed to ensure customers are eligible. AP St. 10-R at 3. The application process for these customers is simple and does not require additional income documentation and, therefore, does not impose an incremental burden on CAP enrollees. *See* AP St. 10-R at 3. Indeed, Aqua PA will notify Helping Hand customers by mail of the replacement and expansion of the existing program, which will detail the benefits of the CAP and encourage them to participate. AP St. 10-R at 3. These customers can confirm their income via self-attestation, and enroll over the phone, online or through a participating agency. AP St. 10-R at 3. Moreover, while the Company will encourage participation in the new program, existing Helping Hand customers should have the right to make an affirmative choice whether to enter the new CAP.

I&E witness Ms. Wilson relatedly recommended that the Company be required to verify enrollees' income for them to be eligible for CAP. I&E St. 1 at 45-47. Aqua PA explained that discount water programs "do not typically require income documentation for participation" and that "[p]roviding income documentation can be a barrier to enrollment for eligible households." AP St. 10-R at 3.[52] Moreover, self-attestation of income has previously been encouraged by the Commission. AP St. 10-R at 4. During the periods where this was utilized, Ms. Black testified that the Peoples Companies "did not see a spike in enrollment levels as a result of this flexibility and participation levels, year over year, are relatively flat." AP St. 10-R at 4. As with any income-based programs, there may be individuals that attempt to perpetrate fraud. AP St. 10-R at 4. However, customers who are genuinely low-income are generally those that seek assistance, in Ms. Black's experience. AP St. 10-R at 4. As such, it is reasonable to expect that the proposed CAP will not be subject to abuse or harm to paying customers, contrary to Ms. Wilson's assertions.

OCA and CAUSE-PA also recommended that the Company develop a Community Education and Outreach Program ("CEOP") to promote the proposed CAP. OCA St. 5 at 49-50; *see* CAUSE-PA St. 1 at 47-48, 64. Aqua PA agreed that a CEOP is an important component of universal service programs. AP St. 10-R at 5. Ms. Black explained that:

> I developed the CEOP for the Peoples Companies. The Peoples Companies' plan included outreach efforts for both broad and targeted audiences, defined methods of outreach, and set thoughtful timing of activities in an effort to increase knowledge of Peoples Companies' programs and increase enrollment. <u>I envision a similar design for Aqua PA's CEOP that considers the unique characteristics of Aqua PA's service territory, customer base and</u>

[52] The Company is utilizing Dollar Energy Fund to administer the CAP and was informed by Dollar Energy Fund that "their estimate of the number of agents needed to support the program assumed management of income documentation." AP St. 10-RJ at 2. Therefore, assuming that no income verification requirement is imposed, the costs of the proposed CAP could be reduced by approximately $89,000 per year, as one less agent could be used by Dollar Energy Fund to administer the program. AP St. 10-RJ at 2-3.

> local agencies/organizations. As with the Peoples Companies' outreach plan, alternative language needs will also be considered in development of Aqua PA's plan.

AP St. 10-R at 4. She further explained that Aqua PA's anticipated outreach and education will utilize the multiple touchpoints that utilities have with low-income customers and other entities, and that Aqua PA "plans to seek collaboration with other utilities to cross-promote its low-income programs with the goal of reducing barriers to participation and encouraging customers to avail themselves of all beneficial programs." AP St. 10-R at 5-6. In this regard, Aqua PA's proposed CAP will include broad outreach and collaboration to ensure customers are made aware of the benefits available to them and are given significant opportunities to take advantage of the available benefits.

Aqua PA further addressed an additional outreach-related recommendation from CAUSE-PA regarding the promotion and utilization of the Company's Hardship Fund. AP St. 10-R at 6-7. Ms. Black explained that the Company generally agreed with Mr. Geller's recommendations and could:

- Promote the fund to contact center staff and utilize a community based organization to manage the fund in order to increase referrals;
- Revise the maximum grant available on a one-per-calendar-year basis to $500 to allow the fund to be better utilized by more customers in need; and
- Carry-over unspent funds from one year to a subsequent year.

See AP St. 10-R at 6-7.[53] As such, Aqua PA could agree to these modifications of its Hardship Fund as a part of the overall modifications to its USPs in this proceeding.

With respect to the further recommendations made by OCA and CAUSE-PA regarding the design of the CAP, it is important to recognize the functional limitations of the Company's

[53] Aqua PA notes, however, that a commitment to using a CBO to administer the fund would result in certain fees paid to the CBO for administrative services being removed from the Company's contribution to the Hardship Fund.

current CIS. Ms. Black explained that "[b]ecause Aqua PA will be converting (its billing system) to SAP in 2023 and development of system requirements is in the early stages, programmatic changes to the existing system are not recommended." AP St. 10-R at 8. As such, the proposed CAP's design, including the bill discount and arrearage forgiveness benefits, were designed, and must be considered in light of, the functionality of the current CIS. AP St. 10-R at 8.

Keeping in mind this limitation, the recommendation that arrearage forgiveness benefits be accelerated to allow participants to exhaust pre-program arrearages within three years should be rejected. OCA St. 5 at 61; CAUSE-PA St. 1 at 53-54. While Ms. Black recognized that the Peoples Companies and most Pennsylvania energy utility CAPs provide arrearage forgiveness as a three-year benefit, she explained that "Aqua PA's current billing system does not have the capability to implement such a customized arrearage forgiveness benefit." AP St. 10-R at 8-9. Moreover, "for customers with arrearages less than $900 when entering the program, $25 per month would allow for exhaustion of pre-program arrears in a timeframe shorter than three years." AP St. 10-R at 9. Ms. Black also explained alternatives that are currently available to customers to accelerate paying off their arrearages, including: (1) utilizing the Hardship Fund; and (2) utilizing Low-Income Household Water Assistance Program ("LIHWAP") funds. AP St. 10-R at 9. The limitations of Aqua PA's current CIS and the alternatives available to customers to accelerate paying off their arrearages demonstrate OCA's and CAUSE-PA's recommendations are unreasonable.

In response to the Company's rebuttal, OCA revised its recommendation to propose that the arrearage forgiveness granted should be increased to $45 per month. OCA St. 5-SR at 7. CAUSE-PA also revised its recommendation, to propose that the arrearage forgiveness

component be revised to a three-year forgiveness mechanism within 90 days after the Company's conversion to SAP in 2023. CAUSE-PA St. 1-SR at 10. With respect to these revised recommendations, the current Helping Hand program provides for a $25 per month forgiveness. Before considering changes to that arrearage forgiveness amount, experience should be obtained with the new CAP, and its expanded benefits. OCA and CAUSE-PA also relatedly recommended that arrearage forgiveness benefits should be granted when a full CAP payment is made, regardless of timeliness. OCA St. 5 at 61; CAUSE-PA St. 1 at 53-54. While providing the benefit when a full CAP payment is made is beneficial, Aqua PA's current CIS is limited to provide a $25 benefit when a timely payment is made. AP St. 10-R at 9-10. However, Aqua PA will convert to the SAP platform in 2023, and has committed to provide arrearage forgiveness benefits for each full CAP payment made, regardless of timeliness, when the conversion to SAP is completed. AP St. 10-R at 10. As such, while Aqua PA opposes implementing this recommendation at this time, it has agreed to implement the recommendation once its CIS has been replaced.

Mr. Colton and Mr. Geller also raised concerns regarding the affordability (*i.e.*, water burden) for low-income households under the proposed CAP. *See, e.g.*, OCA St. 5 at 35-37; CAUSE-PA St. 1 at 43-45. Specifically, each of these witnesses recommended that the Company consider implementation of a PIP similar to plans in effect at other energy utilities. OCA St. 5 at 31 (recommending a PIP structure be proposed in Aqua PA's next base rate case); CAUSE-PA St. 1 at 45 (recommending a PIP structure be implemented upon conversion to SAP).

Ms. Black demonstrated that the Company's proposal improves affordability, contrary to OCA's and CAUSE-PA's concerns. She explained that:

> Currently, low-income consumers, even those currently participating in Helping Hand, are responsible for the full water and/or wastewater bill according to their household usage. The Company's proposal decreases that monthly responsibility through offering discounts that are tiered to provide larger discounts to those with lower income.

AP St. 10-R at 10.

Furthermore, Ms. Black opposed the parties' recommendations regarding a PIP structure. While she explained that PIPs "are designed to provide a unique payment based on an individual household's financial circumstance," they "are typically more expensive to implement and are more costly to ratepayers." AP St. 10-R at 10-11. The Company's proposed CAP does provide different benefit levels based on income tiers, which goes a step further than other water company assistance programs, while maintaining reasonable costs to ratepayers. AP St. 10-R at 11. It is important to highlight that as a water and wastewater provider, Aqua PA still has many different residential tariff rates creating far more complexity than might be experienced in the energy sector. *See, e.g.*, Tariff Water-Pa. P.U.C. No. 2, Pages 3-4 (listing schedule of rates); Tariff Sewer-Pa. P.U.C. No. 2, Page 3 (listing schedule of rates). As such, the Commission should not prejudge the costs and purported benefits of a PIP mechanism for Aqua PA by directing the Company to change its program in a year from now or ordering the Company to propose a PIP in its next rate case. Other parties are not prohibited from proposing changes to the CAP in the Company's next case, where costs and benefits can be examined. However, the Company should not be ordered to propose and support a program which it may disagree with.

OCA also recommended the implementation of a fourth tier of discounts under the bill discount program, applicable to customers with incomes below 50% of the FPL. OCA St. 5 at 32-33. However, the complexity of rate maintenance in Aqua PA's current CIS makes the implementation of this recommendation unreasonable, as it would further complicate enrollment

and maintenance of the benefits. AP St. 10-R at 11. In addition, the Company's three-tier structure provides significant benefits, encourages conservation and controls program costs. AP St. 10-R at 11. Furthermore, the overall program cost and its effect upon the bills of non-CAP customers must be considered. As such, OCA's proposal to add a fourth tier of benefits should be rejected.[54]

Finally, I&E witness Ms. Wilson recommended Aqua PA be required to track LIHWAP funds by year on a per-customer basis, as a part of its USPs. I&E St. 1 at 48. Aqua PA explained that, in anticipation of the availability of LIHWAP funds, it has created a specific payment posting type that will allow the Company to track and report on these payments to ensure proper handling of unused funds. AP St. 10-R at 15. Furthermore, Aqua PA agreed with I&E's recommendation to conduct outreach to its customers to inform them of LIHWAP and encourage participation, indicating it already planned to do so. AP St. 10-R at 15.

4. The Costs Of Aqua PA's CAP Should Be Recovered Through The Proposed Reconcilable USR.

Aqua PA proposed to implement a USR, similar to the riders in place at the Peoples Companies and other energy utilities throughout the state, to recover the costs of its CAP from residential customers. AP St. 10 at 9. Ms. Black explained that costs related to CAP discounts, CAP arrearage forgiveness benefits, CAP administration by a third party (*i.e.*, Dollar Energy Fund) and the proposed Conservation and Emergency Repair Program ($100,000 per year) were proposed to be recovered through the USR. AP St. 10 at 9. Aqua PA's calculation of the costs

[54] Aqua PA notes that OCA proposed to change its recommended tier structure in its surrebuttal testimony, and proposed different benefits associated with these tiers. *See* OCA St. 5-SR at 24-25. This change to OCA's recommendations was provided too late in the proceeding for any meaningful analysis to occur; Aqua PA's rejoinder testimony was due at noon less than three days after this proposal was raised.

to be recovered through the USR is based on its anticipated enrollment[55] in the CAP, subject to an annual reconciliation. AP St. 10 at 10.

Aqua PA's proposed USR is consistent with the Commission's regulations, prior Commission orders and in compliance with the *Aqua-Peoples Settlement.* Section 69.266(b) of the Commission's regulations states that "[i]n rate cases, parties may raise the issue of recovery of CAP costs, whether specifically or as part of universal service program costs in general, from all ratepayer classes." 52 Pa. Code § 69.266(b). Aqua PA only proposes to recover the costs of its CAP program (including the cost of the benefits and the costs of offering the programs) from residential customers via the USR. AP St. 10 at 9-10.

The Commission has also previously explained that:

> Allowing recovery through a surcharge rather than a base rate will establish a charge which tracks the actual amount spent and allows customer rates to be adjusted on a regular basis to recover the actual costs. Accordingly, the Commission must allow recovery through a surcharge that is either reconciled or adjusted frequently to track changes in the level of CAP costs consistent with the direction given in the Competition Acts.

Customer Assistance Programs: Funding Levels and Cost Recovery Mechanisms, Docket No. M-00051923, at p. 15 (Final Investigatory Order entered Dec. 18, 2006) ("*Final CAP Investigatory Order*"). Consistent with the Commission's reasoning, Ms. Black explained that the rider is an appropriate mechanism for recovery of CAP costs:

> Energy utilities in the Commonwealth have a long history of implementing riders, such as the proposed USR, to track and recover costs associated with universal service programs. Peoples Natural Gas received approval in its 2010 base rate case to implement such a rider. The rider Aqua PA proposes is very similar in nature to the rider used by Peoples for a number of reasons. Throughout the settlement commitments to the acquisition

[55] The Company projected enrollment in the proposed CAP to include 10% of the eligible population in year one, increasing to 25% of the eligible population by year three, based upon prior experience gained from the implementation of the Peoples Companies' program. AP St. 10 at 10-11.

> case, there was a general theme of sharing best practices throughout Aqua PA and Peoples. Peoples has implemented universal service programs that have been reviewed by independent evaluations and PUC audits for a number of years. The funding mechanism for its programs, is a rider that tracks actual costs for recovery. The use of the rider ensures that ratepayers are only responsible for actual costs of the program, rather than projected costs that may not come to fruition if enrollment is less than expected, for example.

AP St. 10 at 10. Moreover, the *Aqua-Peoples Settlement* made clear Aqua PA's CAP proposal will include "a comparable funding mechanism that exists for electric and gas utilities in Pennsylvania." *Aqua-Peoples Settlement* at ¶ 108; *see also* AP St. 10 at 10.

Nevertheless, alone among the parties to this proceeding, OCA, through its witness Mr. Colton, recommended that the Company recover the "net costs" of its proposed CAP through base rates rather than the proposed USR.[56] *See* OCA St. 5 at 42-46. This recommendation is without merit and should be rejected for a number of reasons.

First, Mr. Colton asserts that Aqua PA is the first water/wastewater utility in Pennsylvania to propose a reconcilable rate rider for its low-income program costs. He argues that the Company has provided no reason for the use of a reconcilable recovery mechanism. OCA St. 5 at 42-43. As quoted above, Ms. Black explained, in response, that the rider proposed in this case is very similar to that used by its sister utilities, the Peoples Companies. This was consistent with the general theme of the acquisition settlement to share best practices throughout Aqua PA and the Peoples Companies. This is reaffirmed by the plain language of the *Aqua-Peoples Settlement*. *See* OCA St. 5 at 42-43. The settlement makes clear that Aqua PA's proposal will include "a comparable funding mechanism that <u>exists for electric and gas utilities</u>

[56] Importantly, I&E supported the Company's proposal to recover the costs of the CAP through a reconcilable rider. I&E St. 1-R at 3 ("I recommend that if the Commission approves Aqua's program, as generally designed, those costs of the program should be recovered via a reconcilable rider like the gas and electric utilities as Aqua has proposed."). CAUSE-PA did not oppose this proposal.

in Pennsylvania." *Aqua-Peoples Settlement* at ¶ 108 (emphasis added). The Commission approved this settlement as a part of the *Aqua-Peoples Acquisition Order* and, therefore, Aqua PA's proposed USR is consistent with the directives of the Commission and its obligation to comply with the terms of the settlement.

Mr. Colton asserts that there are water utilities with low income programs that recover the costs of the programs in base rates. OCA St. 5-SR at 28. However, as Ms. Black explained, these programs are not as robust as that proposed by Aqua PA. AP St. 10-R at 13. *See Pa. PUC, et al. v. Pa. American Water Co.*, Docket No. R-2020-3019369, 2021 Pa. PUC LEXIS 55, at *90 (Order entered Feb. 25, 2021) ("We agree with the position of the ALJ and the Company that to require the Company to develop a comprehensive USP, in consideration of PAWC's agreement to develop a low-income advisory group or board, would be a superfluous measure at this time."); *see also Pa. PUC, et al. v. Pittsburgh Water and Sewer Authority*, Docket Nos. R-2021-3024773, R-2021-3024774, R-2021-3024779, et al., at pp. 82-91 (Recommended Decision dated Oct. 6, 2021), *adopted without modification* (Order entered Nov. 18, 2021) (not including an emergency repair program as a part of the measures adopted by the authority's USP).

Relatedly, Ms. Black explained that "Surcharges such as the one proposed in this case are used across the Commonwealth for universal service programs." AP St. 10-R at 12. Indeed, Ms. Black "would consider these surcharges to be so common as to be a standard for cost recovery of programs that have grown over the decades to be an important component of utility ratemaking and policy" based off approximately 20 years of experience in the development and administration of the universal service programs and rider for the Peoples Companies. AP St. 10-R at 12; AP St. 10 at 1.

Second, Mr. Colton asserts that the proposed CAP program will not have substantial variability in costs, unlike gas and electric CAPs. OCA St. 5 at 45. However, Mr. Colton disregards the fact that no enrollment limitations have been proposed as a part of the program. OCA St. 5 at 45-46. Ms. Black explained:

> Prior to the implementation of reconcilable riders, energy utilities recovered program costs through base rates, although it is important to note that this recovery model usually included limited enrollment levels. Once a utility's CAP enrollment was 'full', other income eligible customers who needed assistance were turned away.

AP St. 10-R at 12. Where no such limitation on enrollment exists, the costs of CAP can vary based upon enrollment levels. Indeed, "Mr. Colton was clear that he did not propose any limit on the number of customers who could participate in the CAP." Aqua PA Exhibit RFB-1-R. In surrebuttal, Mr. Colton asserts that these participation limits only existed at the earliest, "pilot" stages of these programs. OCA St. 5-SR at 29. Such contention is inaccurate. For example, Columbia Gas of Pennsylvania had an enrollment limit in place as late as 2006. *See* Docket No. M-00051881 (Order entered Jan. 13, 2006).

Furthermore, unlike recovery through base rates, a "[r]econcilable rider[] ensure[s] ratepayers are only responsible for actual program costs <u>which may be more or less than original projections</u>." AP St. 10-R at 13 (emphasis added). Aqua PA is launching a new CAP that is more robust than any low-income program the Company has had to date. As such, although the Company has made enrollment projections, actual enrollment could be less than or exceed the projections. These projections include a substantial ramp-up in projected participation between Years 1 and 3 of the CAP. AP St. 10 at 11. Moreover, various parties have proposed changes in program design, now and between rate cases. These changes would further complicate the projection and recovery of costs in base rates. Mr. Colton appears to acknowledge that

projection may substantially vary from actual experience, but his recommendation completely disconnects the tracking and recovery of costs associated with the CAP from the fact that enrollment levels could vary. *See* AP St. 10-R at 13.[57] In this regard, the proposed USR provides for a more transparent evaluation of the annual costs of the program than would recovery of the program costs through base rates.

Third, OCA's recommendation is disconnected from its other recommendations regarding the design of the proposed CAP. OCA witness Mr. Colton makes numerous recommendations regarding the CAP design that would require the Company to include and implement the best practices of other energy utilities. AP St. 10-R at 13. However, Mr. Colton appears to want to restrict Aqua PA's cost recovery method in a manner that is inconsistent with the cost recovery mechanism used by other energy utilities. AP St. 10-R at 13. Mr. Colton further highlights the inconsistency of his proposals in his surrebuttal testimony, where he asserts that the energy utilities are provided full recovery of universal service costs by statute whereas water and wastewater utilities are not. *See* OCA St. 1-SR at 28-29. In this regard, Mr. Colton advocates for an expansion of Aqua PA's proposed CAP to mirror the robust programs of other energy utilities, but also seeks to put Aqua PA at risk for the cost of this program in a way that other energy utilities are not. OCA cannot have it both ways.

OCA's related recommendation that the Company should only be permitted to recover the "net costs" of the program should also be rejected. Ms. Black explained that this proposal would not permit Aqua PA to "be able to recover costs of billings it would not have collected if the program were not available" and would further include "an offset factor for the recovery of

[57] The Company further notes that the estimated costs of the USP proposed in this proceeding is based on present rates. *See* AP St. 2 at 18 (describing the Baseline Cost).

pre-program arrearage forgiveness costs." AP St. 10-R at 13. Ms. Black explained that OCA's assertions lack merit, as follows:

> Over time, as participation in the program grows and matures to a stable level, bad debt levels will adjust accordingly, reflecting appropriate levels of collectability for the Company. I would further note that because we do not have a historical study of low-income billing collections and its relation to bad debt, any adjustment proposed at this stage would be premature. Use of the reconcilable rider, which limits arrearage forgiveness recovery to those cost which are actually incurred due to customers receiving benefits from timely payments, will align recovery with actual collections experience.

AP St. 10-R at 14.

For these reasons, Aqua PA's proposed USR should be approved without modification, and OCA's proposal that the Company be limited to the recovery of the "net costs" of its CAP through its base rates should be denied.

5. Conclusion Regarding Universal Service Issues.

Aqua PA's proposed CAP expands upon the success of Helping Hand and utilizes best practices implemented by the Peoples Companies to provide additional benefits to low-income customers and improve the affordability of their water and wastewater bills. As such, the Company's proposed CAP, with the modifications described herein, should be approved.

B. QUALITY OF SERVICE ISSUES

As part of Aqua PA's initial filing in this proceeding, the Company submitted information responsive to Filing Requirements QS1-QS7, found in pages 6-700 of Volume 18 of the Company's initial filing. Through this portion of Volume 18 of the Company's filing, the Company presented extensive information regarding its quality of service. During the course of the proceeding, the OCA has raised various concerns over the quality of service Aqua PA has provided to its customers. As these concerns are not a part of Aqua PA's prima facie case, OCA

bears the burden of proof on these issues. Through the following subsections, Aqua PA responds to these concerns and demonstrates that they are without merit. The recommendations of the OCA regarding alleged quality of service issues in Aqua PA's service territory should be rejected.

1. Unaccounted For Water / Non-Revenue Water.

No party challenged the percentage of Unaccounted For Water ("UFW")[58] experienced in the Aqua PA system. Despite the challenges of recently acquired troubled water systems,[59] Aqua PA's Annual Report for 2020 shows that Aqua PA's unaccounted water percentage is 20%. In addition to preparing the UFW information required by the Commission's Annual Report, Aqua PA also prepares calculations of Non-Revenue Water using the American Water Works Association ("AWWA") Water Audit Tool ("AWWA Water Audit").[60] Aqua PA prepares the AWWA Water Audit for six of the Company's divisions. AP St. 9-R at 2. OCA witness Fought asserted in direct testimony that the information that Aqua PA provided in its required Annual Report and in the AWWA audits was inconsistent. Mr. Fought claimed that, in comparing these two reports, the total water delivered in the Schedule 500 Report is 1,327.76 million gallons ("MG") less than the totals in the AWWA Audits for water supplied, representing a more than 3% difference, and that the water sold in the Schedule 500 Report is 258.59 MG less than the AWWA Audit for water sold. OCA St. 7 at 4-6. Mr. Fought recommended that, in future rate cases, "Aqua be required to submit a Section 500 UFW calculation for each of its water systems and that the information should be based on the same data that is required for [American Water

[58] Sometimes referred to as "Non-Revenue Water."

[59] For example, the recently-acquired Phoenixville water system has an unaccounted for water rate of 68%. AP St. 2-R at 8.

[60] Notice of Proposed Rulemaking Order – Proposed Water Audit Methodology ("Water NOPR"), Order entered November 18, 2021, Order at 2.

Works Association] Audits and the annual Chapter 110 Reports that are submitted to [Pennsylvania Department of Environmental Protection]." OCA St. 7 at 6.

Through rebuttal testimony, Aqua PA witness Todd M. Duerr refuted Mr. Fought's concerns regarding the Company's UFW. Mr. Duerr explained that Mr. Fought erroneously compared two different reports and two different methodologies in reaching his recommendation. AP St. 9-R at 2-3. Specifically, Mr. Duerr explained that Mr. Fought "did not take into account the various adjustments that are recommended and part of the AWWA Audit reports." AP St. 9-R at 3. These adjustments include an adjustment set forth in the AWWA Audit reports, providing for a 2% under-registration assumption for meter inaccuracy which, in turn, increases the amount of total water supplied in the AWWA Audit reports. The 2% adjustment made in the AWWA Audit reports are not made to the Schedule 500 Report as required by the Commission. Accounting for this adjustment, Mr. Duerr explained that "[i]f the 2% under-registration adjustment is excluded, the 'Water Supplied' amounts in the AWWA Audit reports produce a total of 42,150.546 MG, making the Schedule 500 Report 467.546 MG less than the AWWA Audit report, or approximately 1% difference." AP St. 9-R at 3. Thus, as Mr. Duerr explained, Mr. Fought's concerns over a 3% difference between the amount of water supplied are unsubstantiated and incorrect.

Mr. Duerr further explained that the recommendation that the Section 500 Report include the same data as the Chapter 110 Report submitted to DEP fails to recognize that different data is used for the two reports. The Schedule 500 Report does not take into account in-plant usage, because it is based upon water delivered to the system. In contrast, the DEP Chapter 110 Reports are based upon water withdrawn from a source. AP St. 9-R at 3-4.

As such, Mr. Duerr disagreed with Mr. Fought's recommended treatment and calculation of UFW, and noted that "the Company already provides its total Company water supplied and water sales information in the Schedule 500 Reports, and provides the Commission with AWWA Audit reports on an annual basis for all six of its operating divisions." AP St. 9-R at 4. Further, Mr. Duerr explained that there is currently a Water NOPR concerning water loss reporting ongoing before the Commission. As such, adopting Mr. Fought's recommendation for separate reporting while that rulemaking is pending would be "redundant, time consuming, and inefficient." AP St. 9-R at 4. Moreover, Mr. Fought's recommendation that the Company prepare separate Section 500 Reports on UFW fails to recognize that the Section 500 Reports are prepared on a consolidated basis, and Aqua PA should not be singled out to prepare separate reports for its operating divisions. As it appears, in the near future, the Commission will be providing guidance on reporting requirements for this very matter for the water industry as a whole, instructing one Company to report differently is not appropriate at this time.

OCA witness Fought's recommendations concerning UFW reporting should be rejected as they are without merit.

2. Pressure And Pressure Surveys.

OCA witness Fought raised three pressure and pressure survey-related concerns in his direct testimony. OCA St. 7 at 6-13. First, Mr. Fought contended that Aqua PA has not complied with the requirements of 52 Pa. Code § 65.6(d) regarding pressure surveys, and recommended that the Company undertake further surveys. OCA St. 7 at 10-11. Second, Mr. Fought recommended that Aqua PA separately categorize pressure related complaints in its customer complaint log. OCA St. 7 at 13. Third, Mr. Fought recommended that Aqua PA be responsible for all damages to customer facilities where the normal operating pressures "exceeds 125 psi unless it installs a pressure reducing valve ('PRV') approved for water supply with the

applicable pressure upstream of the customer's service line." OCA St. 7 at 13. These recommendations are without merit and should be rejected.

The relevant regulation regarding pressure and pressure surveys is found at 52 Pa. Code § 65.6:

> (a) *Variations in pressure.* The utility shall maintain normal operating pressures of not less than 25 p.s.i.g. nor more than 125 p.s.i.g. at the main, except that during periods of peak seasonal loads the pressures at the time of hourly maximum demand may be not less than 20 p.s.i.g. nor more than 150 p.s.i.g. and that during periods of hourly minimum demand the pressure may be not more than 150 p.s.i.g. A utility may undertake to furnish a service which does not comply with the foregoing specifications where compliance with such specifications would prevent it from furnishing adequate service to any customer or where called for by good engineering practices. The authority of the Commission to require service improvements incorporating standards other than those set forth in this subsection when, after investigation, it determines that such improvements are necessary is not hereby restricted.
>
> (b) *Pressure gauges.* Within 2 years after the effective date of this section, each utility shall obtain one or more recording pressure gauges for each separately operated pressure zone for the purpose of making pressure surveys as required by this section. These gauges shall be able to record the pressure experienced on the zones and shall be able to record a continuous 24-hour test. Each utility serving 1,000 or more customers or 1,000 or more customers in any separately operated zone of a multi-zone utility shall maintain one or more of these recording pressure gauges in service at some representative point or points in each of the pressure zones of the utility.
>
> (c) *Telemetering.* An utility may make the pressure surveys required by this section by means of telemetered information electronically transferred to printed copy instead of using recording pressure gauges.
>
> (d) *Pressure surveys.* At regular intervals, but not less than once each year, each utility shall make a survey of pressures in its distribution system of sufficient magnitude to indicate the pressures maintained at representative points on its system. The surveys should be made at or near periods of maximum and minimum usage. Records of these surveys shall show the date and

> time of beginning and end of the test and the location at which the test was made. Records of these pressure surveys shall be maintained by the utility for a period of at least three years and shall be made available to representatives, agents, or employees of the Commission upon request.

Mr. Fought's claim that the Company does not comply with the foregoing regulation is based upon his contention that the Company does not adequately measure pressure at "two representative points" in each pressure system. OCA St. 7 at 10. Mr. Fought recommended that, in Aqua PA's next base rate case, the Company should "submit pressure survey pressure information for its systems from computer models or SCADA systems where available or ('at two representative points') for each pressure zone if a computer model or SCADA system is not available." OCA St. 7 at 11. Mr. Fought described "representative points" as a high and low pressure point in each system. OCA St. 7 at 8.

Mr. Fought's claim that the Company does not adequately survey its systems for pressure is without merit. In response to OCA-VII-16 HIGHLY CONFIDENTIAL, Aqua PA provided extensive data detailing average pressures for the following systems: Chalfont, Clarendon, Crawford, Emlenton, Fawn Lake, Flying Hills, Honesdale, Jenks Township, Lake Latonka, Mt. Jewett, Perkiomen Township, Roaring Creek, Shenango, Superior, Treasure Lake, Waymart and SEPA. As Mr. Fought acknowledged, most of these systems showed pressures that were within with the guidelines of 52 Pa. Code § 65.6(a). A few areas showed some locations with pressures in excess of 125 psi. OCA St. 7 at 11-12. Additionally, in response to Filing Requirement QS2, Aqua PA referenced steps that the Company has taken to comply with 52 Pa. Code § 65.6.

In Rebuttal Testimony, Aqua PA witness Duerr described the extensive efforts undertaken by the Company to monitor pressures throughout its various pressure systems:

> I agree with Mr. Fought that the use of pressure monitoring using hydraulic models and SCADA, where available, are good methods to comply with the requirements in the absence of physical

> measurements. I agree with Mr. Fought's observation that Aqua PA records pressures annually at over 24,000 hydrants in its systems. In further support of how the Company monitors system pressures, Aqua PA has operational procedures in place including: (1) a 24/7 operations control center for the SEPA water system that monitors tank levels, adjusts pump operation, well supply and coordinates with our water plant to sustain tank levels and resultant system pressure targets; (2) in Greater PA, our operations staff monitors pressures at points of entry to the system (water plants, well discharge), water storage tanks and pressure regulating vaults in addition to hydraulic models and SCADA information where available.

Aqua PA St. No. 9-R at. 6.

Mr. Duerr disagreed with Mr. Fought's assertion that the Company does not comply with the Commission's regulation, and in particular disagreed with Mr. Fought's interpretation of what constitutes "representative points" on the Company's system:

> Mr. Fought's recommendation that the pressure readings should be made at two representative points defined as "a high and low pressure point in each system" is not what is required by the Commission's regulations. As stated above, the requirement of 52 Pa. Code § 65.6(d), is to "make a survey of pressures in its distribution system of sufficient magnitude to indicate the pressures maintained **at representative points** on its system. The surveys should be made at or near periods of maximum and minimum usage" (emphasis added). Thus, the Company complies with the location criteria given the many engineering tools, operational methods, and physical measurements as I have described above. These readings, individually and as an operating system, occur over various times of the day, including near minimum and maximum usage periods (e.g., the Company's operations control center is a 24/7 operation; SCADA systems at wells and other facilities record related pressure operational data 24/7 and the Company can evaluate if issues occur; lack of acute customer complaints; absence of chronic customer complaints; pressure testing of the large number of hydrants is done through the day and night; tank levels are continuously recorded). As such, the Company has pressure readings in all of its systems and is in compliance with the regulation.

AP St. 9-R at 6-7. Mr. Fought's recommendation that the Company provide additional pressure measurements is without merit and should be rejected.

Mr. Fought also asserts that the Company's customer complaint log should be modified to provide a separate category of "pressure" complaints, despite the fact that Aqua PA already tracks and describes all complaints, including those related to water pressure. AP St. 9-R at 7. Mr. Duerr disagreed with Mr. Fought's contention that the Company should separately categorize pressure related complaints. Aqua PA St. No. 9-R at 7. Indeed, Mr. Duerr noted that by simply searching "pressure" in the excel spreadsheet provided in response to OCA-VIII-18, parties are "able to locate each instance where pressure was an issue for the customer." AP St. 9-R at 9. However, in order to be responsive to OCA's concerns, the Company agreed to highlight pressure issues within the Water Complaint logs when such information is submitted in Aqua PA's next base rate case. AP St. 9-R at 9.

Lastly, Mr. Fought asserted that the Company should reduce pressures to all customers below 125 psi, or be responsible for any damages resulting from higher pressures. OCA St. 7 at 13. In response to Mr. Fought's recommendation that the Company be responsible for damages related to instances in which a system is pressurized above 125 psi, Mr. Duerr explained that, under advice of counsel, the Commission does not have the authority to award damages. Aqua PA St. 9-R at 10; *see also DeFrancesco v. W. Pa. Water Co.*, 453 A.2d 595, 596-97 (Pa. 1982); *Elkin v. Bell of Pa.,* 420 A.2d 371, 375 (Pa. 1980); *Feingold v. Bell of Pa.,* 383 A.2d 791, 794-95 (Pa. 1977).

Additionally, Mr. Duerr explained that there are locations within the Company's system where it is necessary to maintain pressures above 125 psi:

> The Company has a variety of systems with varying system characteristics, geometry, elevation, and alternate operational plans when needed. The Company's SEPA system covers an area of over 500 square miles with elevations ranging from near sea level to over 700 feet about sea level to supply customers with adequate service, some areas of the Company's systems will have pressures

> above 125 psi. Depending on the location of a customer, either near a treatment plant or tank, the pressure may be higher [than 125 psi] in order to supply other customers downstream at a higher elevation within a system or distant from the entry point.

AP St. 9-R at 11-12.

Mr. Duerr also specifically highlighted language in 52 Pa. Code § 65.6(a), which contradicts Mr. Fought's recommendation: "A utility may undertake to furnish a service which does not comply with the foregoing specifications where compliance with such specifications would prevent it from furnishing adequate service to any customer or where called for by good engineering practices." Additionally, Mr. Duerr explained that Rule 31 of the Company's water tariff states that "[i]n accordance with the specifications of the Company, the Customer shall install a Pressure Reducing Valve, to be set at a pressure not to exceeds the applicable limits, as follow: 1) on the domestic service line when the pressure in the Company's distribution system exceeds 80 pounds per square inch (psi)". Tariff Water-PA P.U.C. No. 2, Original Page 45, Rule 31; AP St. 9-R at 11. As such, the Company's Commission-approved tariff requires installation of a PRV by the customer, and not Aqua PA.

The Commission recently considered, and rejected, a virtually identical argument presented by OCA in the recent Pennsylvania American Water Company ("PAWC") rate case. In that case, the OCA recommended that, to protect customer service lines and inside plumbing in situations where PAWC elected to provide service at higher than 125 psi, PAWC should either provide a pressure reducer protecting the customer's service line; or provide an insurance policy covering repair or replacement of the service line. The Commission concluded:

> We agree with the ALJ's noted Findings of Fact, which are well-supported by the record in this case. Those findings, as well as the Commission's Regulation governing departure from normal operating pressures support the Recommended Decision's preservation of PAWC's ability to serve customers in challenging terrain and the customer's obligation to install appropriate pressure

> reducing equipment to protect their service line. In addition, we determine that it is not reasonable to impose the requirement of insuring the customer service line upon the distribution utility. Therefore, the OCA's Exception No. 15 is denied.

Pa. PUC, et al v. Pennsylvania American Water Company, Docket Nos. R-2020-3019369, R-2020-3019371, et al., 2021 Pa. PUC LEXIS 55, at *102 (Opinion and Order entered Feb. 25, 2021)

As was the case with PAWC, Aqua PA provides pressure in excess of 125 psi in those situations where it is needed to serve customers in challenging terrain, and where needed to flow water between operating districts with different pressures. AP St. 9-R at 12. OCA witness Fought's recommendations concerning pressures in excess of 125 psi should be rejected.

3. Isolation Valves.

Isolation valves are installed on water mains so that the flow of water can be shut off in sections of the distribution system in case of a water main break or for other main repairs and replacements. OCA Witness Fought presented direct testimony on isolation valves, and recommended that Aqua PA begin to maintain records of when the Company attempts to exercise every isolation valve and whether that valve was successfully exercised. OCA St. 7 at 16. Further, Mr. Fought recommended that Aqua PA "exercise (or attempt to exercise) 16,700 isolation valves per year until all the non-critical valves have been exercised in a 5 year period." OCA St. 7 at 16. In doing so, Mr. Fought also recommended that Aqua PA submit a schedule to the OCA and other parties to the above-captioned proceeding for repairing and/or replacing the isolation valves that were not properly exercised. OCA St. 7 at 16. As Mr. Duerr points out, Mr. Fought provides no cost estimate for the amount of time and additional workforce needed to accomplish his suggested recommendation.

In rebuttal, Aqua PA witness Duerr explained that Aqua PA "has had a critical valve program for some time." AP St. 9-R at 13. Moreover, Mr. Duerr stated that "the Company has inspected critical valves regularly and began tracking and recording the inspection of critical valves in 2017." AP St. 9-R at 13. In the Company's recent management audit, the Commission commended Aqua PA for the Company's rate of inspection of critical valves. AP St. 9-R at 13. As a matter of the normal course of operations, Aqua PA operates between 6,000 to 8,000 valves per year, or about 10% of its total valves. Appendix E (Aqua PA Exhibit TMD-4-R, Response to Yanora 5).

In rebuttal, Mr. Duerr also explained that the Company has already made commitments to the Commission regarding a non-critical valve inspection and exercising program:

> In the Company's 2020 management audit, the Company agreed to evaluate a non-critical valve inspection and exercise program. Aqua PA agreed that non-critical valve inspection and exercising program is warranted, but respectfully had concerns with the suggested exercising frequency outlined in the report. As part of the implementation plan, Aqua PA agreed to evaluate Aqua PA's water systems and develop a non-critical valve inspection and exercising program. This effort will consider such factors as standard operating procedures for inspection and exercising, valve operating frequency, the identification of routinely operated valves, and the resources necessary to complete same. This program will ensure that non-critical valves will be inspected and exercised.
>
> All critical valves have been identified in the Aqua GIS asset registry and will continue to be updated as as-builts are received. These valves currently have exercising schedules created and maintained in Aqua PA's work order management system. These schedules will be transferred to SAP Plant Maintenance in January 2022 and continue to be maintained at the asset level to ensure compliance with critical valve requirement.
>
> All non-critical valves have been identified in the Aqua GIS asset registry as well. An analysis has been completed to ensure the exercising of these valves is completed over a 12-year period. Internal staff used GIS analysis techniques to identify valve proximity to major roadways to determine staffing requirements

> needed for traffic control measures. The Company is developing a timeline to determine which non-critical valves are scheduled in year one, two, etc.

AP St. 9-R at 13-14.

OCA's proposed inspection program for non-critical valves should be rejected. OCA has not undertaken any analysis of issues such as frequency of use, location, procedures for inspection and exercising and resources available in developing its 5-year exercising proposal. In contrast, the Company has done so, and has developed an appropriate inspection and exercising program. The OCA's recommendation on valve inspection is inefficient and redundant, as Aqua PA has made commitments through the Company's 2020 management audit relating to the inspection of non-critical valves. AP St. 9-R at 13.

OCA witness Fought's recommendations concerning isolation valves should be rejected.

4. Fire Hydrants.

Aqua PA has over 21,000 public fire hydrants in its systems. AP Exhibit 5-A, Part I, at 40. In response to discovery, Aqua PA identified 16 public fire hydrants on the Company's systems that cannot provide the minimum fire flow of 500 gallons per minute at 20 psi. Through his direct testimony, OCA witness Fought argued that the 16 aforementioned fire hydrants should be marked such that they will only be used for flushing and blow-offs and, once Aqua PA marks them as such, the Company provide confirmation to the OCA and other parties. OCA St. 7 at 16-17.

In rebuttal, Aqua PA witness Duerr explained that "the Company has planned main replacement projects to address these hydrants within the next three years." AP St. 9-R at 15. Further, Mr. Duerr elucidated that "[d]uring this time, the Company will attempt to either find alternative locations for these hydrants or remove them." AP St. 9-R at 15.

As Mr. Duerr noted in his rebuttal testimony, the Company has several main replacement projects scheduled in an effort to address the 16 fire hydrants that Mr. Fought expressed concerns about. No other party presented testimony on this issue and, due to the Company's ongoing main replacement plans and plans to relocate or remove these hydrants, Mr. Fought's recommendations are unnecessary and should be rejected.

5. Flushing Of The Distribution System.

OCA witness Fought raised several concerns through his direct testimony related to Aqua PA's flushing of its distribution system. First, Mr. Fought noted a purported discrepancy between the number of flushing related water complaints, and the higher number of flushing related work orders. OCA St. 7 at 18. Second, Mr. Fought recommended that Aqua PA "flush the entire SEPA system once every three years…" OCA St. 7 at 19.

OCA witness Fought expressed a concern that the Company opened 4,008 work orders regarding flushing in the SEPA Division between January 1, 2019 and September 30, 2021, but the Company's Water Complaint Log for the same period only showed 3,633 work orders, with 2,705 of those complaints concerning flushing. Mr. Fought stated that the Company should explain this discrepancy in rebuttal, because it may indicate that the Water Complaint Log is incomplete. OCA St. 7 at 18. In his Rebuttal Testimony, Aqua PA witness Duerr explained that the alleged discrepancy was not due to the Water Complaint Log being incomplete. As Mr. Duerr explained:

> Mr. Fought's expectation that a customer complaint call will be equal to the number of flushing work orders is incorrect. The work orders generated due to complaints are not the only reason for work orders related to flushing. In reality, I would expect more flushing work orders. Entries in Aqua PA's complaint log are from specific customer contacts to Aqua PA. Flushing work orders are created for a variety of different reasons not always stemming specifically from a customer contact. For example, testing in the system may reveal lower than targeted chlorine levels

> that would require field service representatives to flush the system. Additionally, multiple work orders may be created for flushing activities that may or may not be related to a single complaint.
>
> A work order is tied to an asset, so two work orders would be created if a field service representative had to flush at a blow off and at a hydrant in the same system. To complete flushing for a complaint, a field service representative may have to flush multiple assets (hydrants and blow off valves) to fully flush the main, all requiring separate work orders. Flushing work orders will also be created after a main break is fixed to ensure water quality, and may also be created before a scheduled main replacement in the system, both of which are not linked to a specific customer compliant. Other flushing Work Orders not related to customer complaints include our pro-active flushing program. In short, the number of flushing Work Orders and Customer complaint logs related to water quality will unlikely be equal.

AP St. 9-R at 16-17. Apparently dissatisfied with this explanation, OCA witness Fought speculates in surrebuttal that the Company's work order log "may have been sanitized into a complaint log." OCA St. 7-SR at 11. OCA's concern about work orders related to flushing is without merit and should be rejected.

Mr. Fought recommends that the Company's SEPA system be flushed entirely at least once every three years. Mr. Fought has offered no evidence that such a flushing schedule is necessary. The extent of customer complaints (about 3,600 over 2 ¾ years for approximately 370,000 customers in the SEPA operating system) does not suggest a serious water quality issue requiring a change to the Company's flushing procedures. Even Mr. Fought acknowledges that the Company has a "strong record of sustaining water quality in the SEPA system through its current practices." OCA St. 7-SR at 9, 10. Further, in response to Mr. Fought's recommended SEPA flushing schedule, Mr. Duerr explained that he is aware of no industry standard requiring flushing at the schedule proposed by OCA. Mr. Duerr further explained that flushing is labor intensive, somewhat disruptive to customers and the community and can result in significant non-revenue water volume. AP St. 9-R at 17. As Mr. Duerr noted:

> The Company's SEPA flushing process considers many factors including: water quality samples; customer issues; the geometry of the system (if mains are looped); volume of water traversing through an area on a daily basis; and proximity to wells and tanks. The aggregate of these types of "inputs" to the Company's flushing process drive how and when flushing occurs. The Company's water quality sampling and data analysis procedure identifies areas of potential water quality problems and generates work orders to flush those areas. The Company also has a nitrification monitoring program that will identify if flushing is required to avert a nitrification bloom. As mentioned above, the Company has a proactive localized flushing program to address areas that may require more frequent flushing. We periodically conduct unidirectional flushing in a defined area when our operational procedures identify the need.

AP St. 9-R at 17-18. As such, Mr. Duerr explained that the Company should maintain flexibility in flushing its distribution system, and does not believe a three-year baseline schedule, as promoted by Mr. Fought, is warranted. AP St. 9-R at 18.

OCA witness Fought's recommendations concerning flushing of the distribution system should be rejected as without merit.

6. Per- and Polfluoroalkul Substances ("PFAS").

OCA witness Fought noted that Aqua PA maintains a website with information and treatment for PFAS. OCA St. 7 at 19. OCA witness Fought also explained that, for some water sources, the most recent posted test was from sources taken in 2016, 2017, and 2018. OCA St. 7 at 19. Mr. Fought acknowledged that this was likely due to those water sources testing below 13 parts per trillion ("PPT") for PFAS, which is Aqua PA's standard.[61] For sources that test below 13 PPT, Aqua ceases testing. OCA St. 7 at 19. In light of his understanding of the Company's PFAS testing procedures, OCA witness Fought recommended that, for water sources that Aqua PA no longer tests for PFAS, Aqua PA add a statement to its website explaining why testing was stopped. OCA St. 7 at 19-20.

[61] The EPA's non-enforceable health advisory standard for PFAS is 70 ppt.

In rebuttal, Aqua PA witness Duerr explained that "[t]he Company has reviewed Mr. Fought's discussion and will include clarifying comments on the Company's website regarding the reasons the Company ceased testing at certain [s]ites." AP St. 9-R at 19.

As no other party presented testimony on this issue, and Aqua PA has agreed to Mr. Fought's recommendations regarding PFAS Reporting, the Company's PFAS procedures should be accepted by the Commission.

7. Water and Wastewater Customer Complaints.

In response to Filing Requirement QS4, Aqua PA provided a summary report detailing the Company's compliance with 52 Pa. Code § 65.3. Further, Aqua PA provided a customer complaint log on a live Excel spreadsheet detailing customer complaints and the Company's response thereto. OCA St. 7 at 20. The log can be sorted to determine if there are several complaints regarding the same issue that occurred around the same time and location. OCA St. 7 at 20. OCA witness Fought raised several concerns regarding complaints about Aqua PA's water and wastewater systems. First, Mr. Fought pointed out that the Company had more work orders concerning flushing than the total complaints in the Customer Complaint Log. OCA St. 7 at 20. Previously, in Section VIII.B.5. of this Brief, the Company explained that the difference between flushing work orders and complaints requiring flushing was to be expected, and was not indicative of a problem with the complaint log. Further, Mr. Fought argued that "pressure" should be included as a main complaint category. This contention also has been responded to in Section VIII.B.2. of this Brief, and will not be repeated here.

Mr. Fought's final concern regarding the customer complaint log was that customer names and addresses needed to be included. OCA St. 7 at 21. In response to Mr. Fought's concerns, Aqua PA provided an updated CONFIDENTIAL response to OCA-VIII-18 to include

customer name and address, and an updated CONFIDENTIAL response to OCA-VIII-24 to include customer addresses on December 1, 2021. AP St. 9-R at 19-20.

Lastly, Mr. Fought requested that the Company respond to several customer complaints that have come from Formal Complaints and letters to the Commission and OCA. OCA St. 7 at 23-24; OCA St. 7-SD. at 1-2. In response to Mr. Fought's request regarding Company responses to letters sent to the Commission and the OCA, Mr. Duerr explained the steps that the Company has taken to respond and, if necessary remediate, customers' concerns as contained in the identified complaints and letters. Mr. Duerr identified seventeen (17) individual customers, explained the issues they raised and described the steps that the Company has taken to address their respective concerns. AP St. 9-R at 20-27. In some instances, after the Company contacted the customers, the customers expressed that they are no longer experiencing the complained-of issues. In surrebuttal, Mr. Fought stated that the Company properly responded to each complaint or letter. OCA St. 7-SR at 12-13.

6. Public Input Hearing Complaints.

Six telephonic public input hearings were held in this proceeding. During those hearings, a number of Aqua PA's customers raised several concerns. The Company reviewed the issues and responded to many of the issues over the phone, testing or via mail. OCA witness Mr. Fought stated that in his opinion, "Aqua has properly responded to each customer's complaint or testimony related to quality of service issues." OCA St. 7-SR at 13.

Similar to many wastewater systems throughout the Commonwealth, Aqua PA does serve a limited number of areas where wastewater customers are billed on a flat rate, meaning that unmetered customers receiving wastewater service from Aqua PA pay the same amount each month, *i.e.*, their water consumption does not have an effect on their monthly wastewater bills. AP St. 9-R at 28. Unmetered, flat-rate wastewater customers make up the communities of

Tobyhanna, Pennsylvania, (730 customers) and Lake Harmony, Pennsylvania, (995 customers). At the public input hearings, two customers from Tobyhanna testified, and eight customers from Lake Harmony testified. Both of these communities were billed on a flat rate prior to Aqua PA's acquisition of these wastewater systems, and the Company has continued to bill the customers on a flat rate basis. AP St. 9-R at 28. As part of the Company's filing, Aqua PA proposed to continue billing these customers at a flat rate. Customers' properties in Tobyhanna and Lake Harmony obtain their water supplies from individual wells not owned or operated by a utility or a municipality/municipal authority. AP St. 9-R at 28. To the best of the Company's knowledge, the water wells on each of these properties are not individually metered. AP St. 9-R at 28. And, even if they were, the meters exist on private property and reading the meters is not practical, nor the responsibility of a water or wastewater provider. AP St. 9-R at 28.

As stated above, two customers from Tobyhanna testified, and eight customers from Lake Harmony testified. The primary assertion made by the customers was that flat rate billing was unfair to customers with below average usage, including customers who may be part-time residents that may use less than full-time residents. *See* Tr. at 70-71 (November 8, 2021), 166-168 (November 9, 2021), 175-181 (November 9, 2021), and 323-325 (November 10, 2021). Following the public input hearings, OCA witness Watkins submitted supplemental direct testimony recommending that Aqua PA implement a pilot program to meter customers' private water wells in Lake Harmony. Under this proposal, Aqua PA would install water meters on customer-owned wells on an opt-in basis. These opt-in customers would be billed at the applicable metered rate. Mr. Watkins further proposed that the Company install water meters on other customer-owned wells based upon a random sample of 10% to 20% of the unmetered

customers. These customers would be billed on a flat rate basis, but the Company would prepare "shadow" bills based upon consumption. OCA St. 4-SD at 2.

In rebuttal, Aqua PA rate design expert Ms. Heppenstall explained that the use of flat rates in the situations involving Tobyhanna and Lake Harmony customers is standard practice:

> Typically, wastewater customers are billed based on metered water usage, as sewer usage is much more difficult, if impossible, to meter. When a wastewater utility does not have access to billed water usage, either because the customer has its own private well or the customer is supplied water by another utility that does not share its monthly metered water usage, the customer is billed a flat rate. As noted previously in my testimony, the flat or unmetered rate is based on the average consumption for a residential customer and is the traditional method of billing a wastewater customer when water usage is unknown.

AP St. 5-R at 17. Ms. Heppenstall further explained the impracticability of Mr. Watkins metering and billing pilot proposal for the customers in these communities:

> I disagree for two reasons. One, the Company does not have the authority to meter a representative sampling of customer-owned private wells. Allowing customers to opt in would only incentivize those customers with low water consumption, not the perceived larger users. Second, there are concerns about the ability to access customers' property to properly install a meter on a well. I understand that Company Witness Todd Duerr will explain the operational issues with this pilot program in his rebuttal testimony (AP Statement No. 9-R). There may be substantial cost involved, and Mr. Watkins' proposal is that the Company bear the cost of such installations. Finally, the lack of authority to meter all privately owned wells means that the "pilot" can never be adopted as a permanent solution. Customers would continually opt for the lesser cost alternative. Mr. Watkins' proposal is unworkable.

AP St. 5-R at 17-18.

Aqua PA witness Duerr further explained why the customers' residency status is not a determinative factor in developing rates for flat rate service:

> Customers pay to have the sewer service available 365 days a year, 24 hours a day, whether they use the service or not. Fixed costs remain that are incorporated into the sewer rate design. The fact

> that a customer is present at a service address only a few days a month is irrelevant to whether the sewer charge is reasonable. Aqua PA has no control over when its customers are present at the service address. Yet, Aqua PA still is required to have its sewer service available for whenever the customer desires to use it.

AP St. 9-R at 29. Aqua PA Witness Duerr also explained the operational issues involved in trying to meter customers private wells:

> First, we reinforce that industrywide flat sewer rates have been utilized to bill for public or private wastewater service in instances where customers have private wells throughout the Commonwealth. While we understand the customer's desire to limit any rate increase, resorting to changing the current methodology on which these customers are billed will not impact that reality, and in fact, some customers could be billed more. For wastewater only customers that receive water from private wells, the Company would be required to enter, traverse, and locate a customer's water well, to a property the Company does not have a right to enter, install a Company owned meter somewhere on a customer's property where a water well is located, and maintain that property going forward. That in and of itself is problematic.

AP St. 9-R at 29-30.

During the public input hearings, assertions were made the residences on Campstead Circle in Tobyhanna possess a meter. Tr. at 176 (November 9, 2021). However, through his rebuttal testimony, Mr. Duerr explained that the Company's understanding is that there is a single well on Campstead Circle that provides service to the residents. AP St. 9-R at 30-31. Further, Mr. Duerr explained that "the well, the water meter, and the water distribution system are owned by the community. There are not individual meters measuring usage to each customer's residence. As such, the Company cannot bill these individual customers based on usage from one community water meter." AP St. 9-R at 30-31.

Furthermore, concerns were raised regarding the Honeycroft wastewater system that was acquired by the Company in 2016. *See* AP St. 9-R at 31. The Company explained that it has installed new controlled stations at the pump stations for this system. AP St. 9-R at 31. In

addition, "[t]he Company has replaced tank mixers, process piping, installed baffles on clarifiers to prevent solids from flowing into the filters, and replaced pump impellers to achieve designed pump capacity." AP St. 9-R at 31. The Company has clearly made significant infrastructure improvements since this system was acquired.

Beyond the general issues raised at the public input hearings explained above, several customers raised concerns over more discrete and individualized issues. Those issues, and the Company's response(s) thereto, are summarized below.

1. Tamara Lesh, Jacqueline Iverson, Elizabeth Fleschar are neighbors and water and wastewater customers who testified at the public input hearing. They expressed a number of concerns with infrastructure improvements and the financial details of the rate application filing. They also expressed concerns about the Peddlers View system. Mr. Duerr explained that the Company has projects planned to help address spray field run-off in the Peddlers View system, including a stormwater containment structure to capture stormwater run-off from the spray field, and planting new vegetation to help increase spray infiltration. In order to better address these concerns the Company has reached out to these customers. AP St. 9-R at 32.

2. Geoffrey Meyer, Peter Mrozinski and Bill Ferguson are neighbors and wastewater customers who testified at the public input hearing. They expressed concerns with the rate application filing and asked several questions. For example, they expressed concerns about purchased wastewater expense for New Garden. Mr. Duerr explained that purchased wastewater expense related to New Garden is costs for pumping and hauling wastewater for treatment at another location. The customers also expressed concerns about the size and complexity of the rate filing. However, the Company followed the standard filing procedures as set forth in the Commission's regulations. Rate increase applications by their nature are lengthy and complex

filings, which the Company bears the burden to support. In order to better address these concerns, the Company has reached out to these customers. AP St. 9-R at 32-33.

Aqua PA will continue to work with customers with issues or concerns to remediate, when possible, the purported problem(s) or concerns. Consistent with the above, Aqua PA has a proven track record of doing exactly that, and has meaningfully engaged with the communities in its service territory that will be affected by the Company's requested rate increase.

C. CUSTOMER SERVICE ISSUES

Many of Aqua PA's service quality and customer service obligations are memorialized through the 2018 Settlement reached in the Aqua-Peoples merger proceeding. Through the *Aqua-Peoples Settlement*, Aqua PA committed to several service quality and customer service performance benchmarks and, through the Company's direct filing—including direct testimony—Aqua PA has demonstrated that it has complied with those commitments. *See* AP St. 1 at 6-25. Many of the relevant customer-service related commitments made in the *Aqua-Peoples Settlement* are listed below:

> 83. Aqua commits to improve Aqua's call center performance to meet or exceed the same performance standards that the Peoples Companies agreed to meet in the 2013 Settlement concerning the acquisition of Equitable Gas Company (Docket No. A-2013-2353647 et al.) for the following three metrics in each of the five calendar years (2020-2024) following closing: i. percent of calls answered within 30 seconds of at least 82%, ii. busy-out rate of no more than 0.25%, iii. average call abandonment rate that is no higher than 4% for 2020-2021, no higher than 3% for 2022-2023, and no higher than 2.5% for 2024.
>
> 84. Aqua America will maintain, at the minimum, the Peoples Companies capital expenditures at pre-acquisition budgeted levels, and will provide to the OCA, I&E and OSBA with projected expenditures for 2019 and 2020.
>
> 85. Aqua PA will develop a system to track Aqua PA customer complaints in a live Excel spreadsheet, consistent with Paragraph 47 in the Joint Petition for Settlement submitted in Aqua PA's

> recent base rate case (Docket Nos. R-2018-3003558 and R-2018-3003561). Aqua PA will review this information and conduct a root cause analysis of adverse trends at least annually.
>
> 86. Aqua PA will commit to a significant reduction in the number of days to respond to customer complaints so that, within 24 months, the average is less than 10.
>
> 87. Aqua PA will develop and adopt a methodology to track whether appointments are made and kept for field operations in a manner similar to that used by the Peoples Companies within 18 months and adopt internal performance standards that meet or exceed those of the Peoples Companies for this performance standard for five years.
>
> 88. Aqua PA will meet its internal 2019 performance objectives as listed below and will continue to establish and strive to meet comparable or more strict performance objectives for five years: i. Estimate read rate – less than 0.5% ii. Actual read rate – 99% iii. Lost time accidents – 19 iv. Responsible vehicle accidents – 4.1 v. Compliance with water regulations – 99.5% vi. Compliance with wastewater regulations – 94.5%
>
> 89. Aqua PA will provide a report to OCA, I&E, and OSBA each calendar year for a period of five years following closing regarding its achievement of the service quality metrics listed in Paragraphs 83-88. The report will outline the actual metrics achieved and additional actions expected to be taken in the following year to further improve customer service. If Aqua PA has not achieved an identified metric, the report must also include the reasons for the failure and Aqua PA's plan to reach the service quality metric. Aqua PA must then convene a collaborative with OCA, I&E, and OSBA to discuss such report.

OCA witnesses have questioned the Company's compliance with some of the foregoing settlement commitments. Witnesses for OCA and CAUSE-PA have also raised issues concerning other aspects of Aqua PA's customer service practices. Through the following subsections, Aqua PA responds to these concerns and demonstrates that they are without merit. The recommendations of the OCA and CAUSE-PA regarding alleged customer service issues should be rejected.

1. Settlement Commitments.

OCA witnesses Barbara Alexander has claimed that Aqua PA failed to comply with certain of the commitments in the *Aqua-Peoples Settlement.* First, Ms. Alexander argued that Aqua PA has failed to meet its *Aqua-Peoples Settlement* commitment to answer 82% of customer calls within 30 seconds. OCA St. 6 at 10. Ms. Alexander acknowledged that the Company's percentage exceeded 82% for both 2019 and 2020, but argued that the calculation incorrectly includes calls handled by its Interactive Voice Response ("IVR") system in determining calls answered. OCA St. 6 at 10. The IVR is an automated way to service customers that call in with questions or concerns. AP St. 10-R at 15-16. According to Ms. Alexander, the IVR system should not be "aggregated" with the Company's person-to-person telephonic contacts. OCA St. 6 at 10-11.

In response to Ms. Alexander's concerns over the Company's use of IVR, Aqua PA witness Rita F. Black explained in rebuttal testimony:

> It is appropriate to include IVR contacts and report an aggregate percentage of calls answered for its contact center service level. This is a standard calculation in the contact center industry for service level performance and is the method used by the Peoples Companies. The IVR is an automated way to service customers, and it is appropriate to use this to calculate service level given that the IVR provides customer support. The Company is committed to improving its contact center performance and looks for new ways to enhance the customer experience. To that end, the Company has recently deployed new contact center technology, which will offer customers a call-back feature.

AP St. 10-R at 14. Paragraph 83 of the *Aqua-Peoples Settlement* states that "Aqua commits to improve Aqua's call center performance to meet or exceed the same performance standards that the Peoples Companies agreed to meet . . . i. percent of calls answered within 30 seconds of at least 82%." The Peoples Companies include IVR contacts in calculating service level performance, which is a standard calculation in measuring contact center performance. As such,

Aqua PA has complied with this provision of the *Aqua-Peoples Settlement.* The claim by OCA witness Alexander of non-compliance is without merit and should be rejected.

Ms. Alexander also claimed that the Company has not met its commitment related to customers' call abandonment rate. Specifically, Ms. Alexander states that the abandoned call rate in 2019 was 4.56%, 4.32% in 2020, and 13.15% through July of 2021. OCA St. 6 at 9-11. Ms. Alexander's contention that the Company has failed to meet its call abandonment rate commitment is both misleading and premature.[62]

Under Paragraph 83 of the *Aqua-Peoples Settlement,* Aqua PA committed that its average call abandonment rate would be no higher than 4% for 2020-2021.[63] In response to Ms. Alexander's concerns over call center abandonment rates, Aqua PA witness Black did acknowledge that the abandonment rate for 2020 was slightly above the target rate contained in the *Aqua-Peoples Settlement*. Data for all of 2021 was not available as of the close of the record. Ms. Black explained that unexpected circumstances out of the Company's control caused the Company to not reach this commitment in 2020:

> [T]he acquisition settlement containing service commitments recognized that unanticipated circumstances could affect the Company's ability to meet individual service commitments in a year. In the settlement, the Company committed to file a report to OCA, I&E and OSBA each calendar for a period of five years after closing of the Aqua-Peoples transaction. That reporting requirement specifically provided that if the Company was unable to achieve a specific metric, the report would include the reasons for failure to achieve a metric and the plan to reach that particular service metric. As identified in our report filed on February 1, 2021, the United States Postal Service delays and severe weather events impacting our customers resulted in higher-than-normal call

[62] Ms. Alexander attempts to link the Company's call center performance to customer survey results. Ms. Black expressed that customer satisfaction rates on surveys are driven by much more than service level and abandonment rates. AP St. 10-R at 17.

[63] The Company notes that the Peoples acquisition was not consummated until March 16, 2020. *Compliance Filing dated June 30, 2020*, Docket Nos. A-2018-3006061, et al. (Indicating that closing of the Peoples acquisition occurred on March 16, 2020.)

> volumes at the end of 2020 and the abandonment rate for 2020 was 4.6%, which was above the 4% commitment for 2020. By way of background, the United States Postal Service delays caused a significant delay in customers receiving their bills and delays in the Company receiving customer payments. The Company complied with the terms of the agreement in its report by identifying its higher abandonment rate and the cause.

AP St. 10-R at 16-17. In surrebuttal, Ms. Alexander questioned how events that occurred one week in December could have caused the Company to miss the call abandonment standard. OCA St. 6-SR at 5. In rejoinder, Ms. Black conclusively demonstrated that the Company was on track to meet the annual average abandonment rate commitment, with an average rate of 3.9% as of December 27, 2020, until weather and Postal Service delays caused a substantial increase in calls. AP St. 10-RJ at 3. As such, Ms. Alexander's concerns over abandonment rates are overstated. As anticipated in the commitments, events outside of the Company's control do happen and they were transparently explained in the February 1st report. Any recommendations suggesting otherwise—including that Aqua PA has violated the *Aqua-Peoples Settlement*—are without merit.

Both OCA witness Alexander and OCA witness Colton argued that the Company is failing to meet its commitments, through the *Aqua-Peoples Settlement,* to reduce complaint response times. OCA St. 6 at 14-15; OCA St. 5 at 70. Paragraph 86 of the *Aqua-Peoples Settlement* provides that "Aqua PA will commit to a significant reduction in the number of days to respond to customer complaints so that, within 24 months, the average is less than 10." At this point, Aqua PA is on track to meet this commitment. In rebuttal, Ms. Black explained that

> [t]he Company committed to significantly reduce the number of days to respond to customer complaints filed with BCS, so that within 24 months the average is less than 10 days. As OCA witness Alexander noted, the Company's response rate in 2020 was 15 and it has gone down to 13 in 2021. The commitment provides that the number of days will be significantly reduced by 2022."

AP St. 10-R at 10. In fact, as evidenced by OCA Exhibit BA-5, Aqua PA's response rate in September and October of 2021 was 10 and 6 days, respectively. AP St. 10-R at 19. This clearly indicates that the Company is complying with the relevant *Aqua-Peoples Settlement* provision, and has shown marked improvement since the release of the 2019 UCARE Report, where the average response time for a consumer complaint was 22.5 days. AP St. 10-R at 19. The Company is clearly on track to meet its commitment to reduce the days to respond to customer complaints below 10 days by March of 2022, which is 24 months after the Peoples Companies acquisition was consummated. Ms. Alexander's claim that the Company is not complying with the commitment contained in Paragraph 86 of the *Aqua-Peoples Settlement* is erroneous and should be rejected.

Finally, Ms. Alexander asserts that the Company is not in compliance with Paragraph 85 of the *Aqua-Peoples Settlement,* which provides that Aqua PA will develop a system to track Aqua PA customer complaints in a live Excel spreadsheet, and will review this information and conduct a root cause analysis ("RCA") of adverse trends at least annually. OCA St. 6 at 12. Ms. Black acknowledged that the live spreadsheet is not yet finalized, but pointed out that this was because the Company has been working with the OCA to develop the spreadsheet based upon OCA's requested parameters. AP St. 10-R at 17.

Ms. Alexander further asserts that the Company does not undertake a RCA of adverse trends. OCA St. 6 at 12. To support her position, Ms. Alexander references the Commission's 2020 UCARE report and observed that Aqua PA had the highest rate of "justified" complaints compared to other water utilities. Ms. Black responded to Ms. Alexander's assertions, and explained that RCA is an ongoing process at Aqua PA:

> As part of the informal complaint process, RCA occurs informally on a daily basis. If informal complaints filed with the Bureau of

> Consumer Services ("BCS") bring to light an error on the part of an employee, coaching for the employee is provided. If cases indicate a broader issue, such as multiple similar cases, the issue is escalated for clarification to the customer contact team and or training if necessary. That being said, the Company is in the process of formalizing the RCA function. In addition, upon conversion to SAP, the Company's RCA efforts can be enhanced by increasing the visibility of case trends through enhanced reporting of case types.

AP St. 10-R at 16-17. Ms. Black further explained that the Company is steadily decreasing its justified complaint rate: "[i]n looking at the Bureau of Consumer Service 2021 reporting for January 2021 through September 2021, the Company's justified rate is currently 10% for consumer complaints, a significant reduction from its 2020 number." AP St. 10-R at 18. As such, reliance on the Commission's 2020 UCARE report is unwarranted and does not provide an accurate, up to date picture of the success of the Company's RCA efforts.

For the foregoing reasons, the Commission should reject OCA's claims that the Company is failing to meet its commitments in the *Aqua-Peoples Settlement*.

2. Other Service Quality and Consumer Protection Issues.

OCA Witnesses Alexander and Colton have raised other issues with respect to service quality and consumer protection. These issues are without merit and should be rejected.

Ms. Alexander recommended that the final order in this proceeding include a requirement that the Company develop and submit a plan describing its specific auditing and oversight policies for its call centers with regular reporting of such evaluation and audits. OCA St. 6 at 5, 24. She asserted that the Company did not provide "documentation that the actual training is accompanied by routine oversight and auditing to ensure compliance." OCA St. 6 at 16. Ms. Black disagreed with this recommendation. Ms. Black explained that in addition to extensive training of call service representatives ("CSRs") on Pennsylvania regulations, the Company has an ongoing quality evaluation program to assess all CSRs' performance and compliance with

operational procedures, including applicable Pennsylvania regulations. This evaluation process by the Quality Assurance team scores call center performance based upon a lengthy set of criteria, as shown in OCA Exhibit BA-8. *See also* AP St. 10-R at 20-21. CSRs are already trained and extensively tested on their call performance and compliance with regulations. A new "plan" on auditing and oversight policies is unnecessary.

In a related contention, Ms. Alexander asserts, without evidence, that the Company "evidently does not affirmatively ask" if a customer is satisfied with the results of the call. Ms. Alexander fails to review her own exhibit. OCA Exhibit BA-8, page 2, specifically provides as follows:

> 1.c. Closing: "Thank you for calling Aqua, are you satisfied with the service provided today"?

The instruction continues on to make clear that the CSR must ask the customer if they are satisfied with the service provided. Ms. Black further explains that if the customer is not satisfied, then the call is treated as a dispute, is investigated and the customer is provided with a utility report, which clearly explains the customers' dispute rights. This process clearly complies with the Commission's dispute requirements. AP St. 10-R at 22-23

Ms. Alexander contended that the Company is not complying with the Commission's termination of service regulations because Aqua PA's training document does not include the requirement that the field service representative ("FSR") attempt personal contact prior to terminating service. OCA St. 6 at 16-17. In rebuttal, Aqua PA witness Rita F. Black explained that "[t]he Company's field service representatives ('FSRs') are instructed to attempt personal contact with a responsible adult prior to terminating a customer's service as required by 52 Pa. Code § 56.94. The Company does agree, however, that the documentation provided should be updated so that it is clear that this is required. The Company will update its process." AP St. 10-

R at 20. Ms. Alexander's concerns on this point have been addressed by the Company through rebuttal.

Ms. Alexander also argued that there is a significant difference between the number of customers whose service was terminated and the reconnection of service for these customers. Ms. Alexander contends that this indicates that the Company is not complying with the Commission's reconnection requirements. OCA St. 6 at 19-20. As such, Ms. Alexander recommended that the final order in this proceeding include a requirement that the Company either revise its procedures and document compliance with restoration of rights and remedies or describe how its current policies reflect these obligations. OCA St. 6 at 18, 24.

In rebuttal, Company witness Black explained that the Company's current process for reconnections complies with applicable Commission regulations. AP St. 10-R at 21. A copy of the Company's restoration of service policy is provided as AP Exhibit RFB-2-R. When a customer contacts the Company to restore service, they are fully informed of what is needed to restore service, in compliance with the Commission's regulations. AP St. 10-R at 21. Ms. Black further confirmed that Company CSRs are fully trained in reconnection guidelines, that this policy is available to all CSRs in the Company's database, and that CSRs are trained on where and how to find that information. AP St. 10-R at 21; AP St. 10-RJ at 4.

In addition, Ms. Black explained that "[t]he number of terminations and the number of reconnections is not a one for one comparison." AP St. 10-R at 21. Ms. Black went on to note instances in which a discrepancy could occur, including when a disconnected customer moves service addresses and requests service in their name again. AP St. 10-R at 21. Additionally, Ms. Black noted that the Company's system cannot "easily distinguish between reconnected service and a 'move-in' for service for customers who are activating water service after a period of

time." AP St. 10-R at 21-22. Thus, for purposes of the current CIS, if a customer is terminated and does not contact the Company within 15 days, the information system records this as a move-in service order. With that in mind, as it relates to reconnection of water service, Ms. Black made clear that "Company CSRs are fully trained in reconnection guidelines." AP St. 10-R at 21. Further, "when speaking to a customer requesting reconnection of water, all Commission requirements are followed." AP St. 10-R at 22. Based on the foregoing, Ms. Alexander's arguments related to service reconnection are meritless and should be rejected.

Ms. Alexander also raised an issue regarding Aqua PA's available options for bill payment. She points to Aqua PA's use of Speedpay – which requires a $2.25 processing fee – and asserts that the fee may present a barrier to those who are forced to make an on-line payment to avoid collection actions that may result in termination of service. Ms. Alexander argues that the Company should consider providing "no-fee payment options," and including the cost of Speedpay in the Company's revenue requirement. OCA St. 6 at 20-21. In response to Ms. Alexander's concerns, Company witness Black made clear that Aqua PA already provides online payment options that do not require payment of an additional fee:

> Customers are provided many different payment methods. The options include making payments on the Aqua PA customer portal which does not charge a fee. The Company does encourage its customer to enroll in paperless billing and use the customer portal for payments. Customers can mail their payment, use auto draft and electronic payments, all of which do not include a fee.

AP St. 10-R at 25. Speedpay is merely one payment option among a myriad of no-fee alternatives; moreover, Speedpay is not an Aqua PA charge – rather, it's charged by Speedpay. AP St. 10-R at 25-26. Consistent with Ms. Black's explanation, Ms. Alexander's concerns are unfounded, as the Company maintains several no-fee payment options. As such, Ms. Alexander's concerns on this issue should be rejected.

Lastly, Ms. Alexander took issue with the Company's late-fee practices during the COVID-19 pandemic. OCA St. 6 at 22. Specifically, Ms. Alexander opined that "[i]t is reasonable to raise a concern about charging such late fees, particularly to lower income customers, when termination was waived, and customer were informed of this change in collection policy." OCA St. 6 at 22.

In rebuttal, Aqua PA witness Black explained that none of the Commission's COVID-19 orders directed or required utilities to stop charging late fees. AP St. 10-R at 26. Further, Ms. Black disagreed with Ms. Alexander's contention that the moratorium on service disconnections during COVID-19 could imply that late fees would also not be charged. AP St. 10-R at 26. In fact, as Ms. Black explained, "[c]ustomers continued to receive monthly bills that clearly identified late payment charges." AP St. 10-R at 27. Moreover, "the Company made multiple communications to customers during the COVID-19 pandemic to encourage customer [sic] to contact the Company to enroll in payment plans to manage their accounts, thereby avoiding late fees." AP St. 10-R at 26. As such, customers were aware that late fees were still applicable to their accounts, and Ms. Alexanders concerns and recommendations on this issue are unfounded and should be rejected.

OCA witness Colton raised concerns over Aqua PA's collections performance. OCA St. 5 at 71-73. Specifically, Mr. Colton was concerned with Aqua PA's percentage of residential customers in debt, and the average amount of the customer arrearage. OCA St. 5 at 71. The data that Mr. Colton relied upon to make these assertions was from between 2012 and 2018. OCA St. 5 at 71-72; AP St. 10-R at 24.

In rebuttal, Company witness Ms. Black explained that the data cited by Mr. Colton was misleading. Specifically, Ms. Black noted that:

> the average arrears by year for active accounts increased from $158.09 to $176 over the 7 year period shown in the chart on page 72 of Mr. Colton's testimony. This is an 11% increase, or roughly 1.6% percent per year. One could consider the modest increase of 1.6% to be flat, rather than increasing, particularly if you also consider that water rates would have increased over this time period are the arrearage increases are likely attributable to those rate changes rather than lack of collection success.

AP St. 10-R at 24-25. Further, Ms. Black noted that "Aqua PA has grown in water acquisitions during the period 2012 through 2018." AP St. 10-R at 25. As such, Mr. Colton's reliance of account disconnections "without quantifying the growth Aqua PA has attained over the same period is misleading." AP St. 10-R at 25. For the reasons explained above, Mr. Colton's concerns over account arrearages and disconnections should be rejected as being without merit.

Finally, OCA witness Colton commented on the Company's justified complaint rates in 2020 and 2021 as an indicator of management performance. Ms. Black responded to Mr. Colton's comments, and explained the need to consider the data in proper context:

> In his testimony, he notes that Aqua PA's justified complaint rate has declined through the first three quarters of 2021 from 15% to 10%, but goes on to the point out the number of complaints against Aqua PA was higher in 2021 to 2020. I think it's important to recognize that an increase in the number of complaints is not an indicator of overall performance of a utility in responding to customer concerns. The number of complaints in 2021 over 2020 generally increased across all utilities. For major natural gas companies, the number of residential consumer complaints increased by 42% while the number of residential payment arrangement requests increased by 209%. For major water utilities, there was a 38% increase in residential consumer complaints and 69% increase in residential payment arrangement requests. Major electric utilities experienced the same increases with 27% more residential consumer complaints in 2021 over 2020 and a 270% increase in residential payment arrangement requests. As collection activities returned to more normal procedures in 2021, the number of cases across all utility types went up as we would expect following the impacts of the pandemic in 2020. I think the most important aspect to consider when we are discussing management performance relates to how many of the complaints received by the PUC were considered, by the PUC's standard, as

> justified complaints. As noted by Mr. Colton, Aqua PA's justified complaint was significantly reduced from 15% to 10%.

AP St. 10-R at 23-24. While there continues to be room for improvement, the data clearly demonstrates Aqua PA is trending in the proper direction on this metric.

3. Language Access.

Through his direct testimony, CAUSE-PA witness Geller raised a number of concerns related to the language access provided by Aqua PA. Specifically, Mr. Geller noted that Aqua PA does not provide translation services in any other language than Spanish. CAUSE-PA St. 1 at 71. Further, Mr. Geller argued that Aqua PA's language access plan is insufficient, and that the Company "should base its language access needs on data from the geographic area it serves." CAUSE-PA St. 1 at 72. In doing so, Mr. Geller recommended "that Aqua be required to provide telephonic translation service of all limited English Proficient customers within their service territory, regardless of what language the caller speaks." CAUSE-PA St. 1 at 72. Mr. Geller also argued that Aqua PA should provide greater translated billing information, including a clear indication on termination notices for Spanish speaking customers. CAUSE-PA St. 1 at 76-77. Finally, Mr. Geller recommended that Aqua PA reevaluate its need for third party interpretation as part of its needs assessment and incorporate clear guidelines for determining the need for third party interpreter service as part of the Company's formal Language Access Plan. CAUSE-PA St. 1 at 75.

In rebuttal, Aqua PA witness Black addressed Mr. Geller's concerns, and explained that "the Company is currently evaluating the implementation of Language Line Translator, an entity that provides translation services and is currently used at the Peoples Companies." AP St. 10-R at 27. Further, Ms. Black acknowledged Mr. Geller's recommendation to conduct a foreign language access assessment, and agreed that the Company will conduct one, "county by county

and review the results to determine whether any changes should be made to its existing policies." AP St. 10-R at 27-28. However, Ms. Black also noted that "[a]ny changes to billing information in Spanish, however, would have to be incorporated into the SAP implementation timeline." AP St. 10-R at 28.

Mr. Geller did not present a further response to Ms. Black's rebuttal testimony as it related to language access. Based upon the foregoing, it is unnecessary to adopt Mr. Geller's language access recommendations.

D. MASTHOPE MOUNTAIN COMMUNITY ASSOCIATION

1. Aqua PA Prudently Planned For Capacity Needs At The Masthope Community In Accordance With Its Obligations Under Section 1501 Of The Public Utility Code.

Masthope is an incorporated association comprised of both full-time and seasonal residences within Aqua PA's service territory. AP St. 9-R at 34. Masthope receives water and wastewater service from Aqua PA. As a provider of public utility service to the Masthope Community, Aqua PA is required to provide "adequate, efficient, safe, and reasonable service and facilities," pursuant to Section 1501 of the Public Utility Code, 66 Pa. C.S. § 1501. Relatedly, Aqua PA files Chapter 94 Reports under 25 Pa. Code § 94.12 for the Masthope system with the Pennsylvania Department of Environmental Protection's ("PADEP").

In this case, Masthope alleges that Aqua PA fell short of fulfilling its service obligations to Masthope. Specifically, Masthope contends that Aqua PA failed to properly plan for future capacity needs at the Masthope community, which lead to hydraulic overflow events, and ultimately, a PADEP-issued restriction on new connections in the Masthope community. However, as explained herein and in the Rebuttal Testimony of Aqua PA witness Mr. Todd M. Duerr, Aqua PA prudently and proactively planned for the capacity needs of the Masthope

Community and undertook the appropriate steps to upgrade the wastewater system and related facilitates that serve the Masthope community.

Aqua PA submits an annual report that includes, *inter alia*, an analysis of hydraulic and organic load projections for the upcoming five years ("Chapter 94 Report"). As part of Aqua PA's 2018 Chapter 94 Report, the Company proactively evaluated capacity needs at the Masthope community and the connection needs of the system. AP St. 9-R at 36-37. Based on its evaluation, the Company determined that a project known as the "Treatment Train Project" would be required to address the system's increasing capacity needs and to avoid future hydraulic exceedance. AP St. 9-R at 36-37. The Treatment Train Project was subsequently expanded to a long-term capital upgrade project based on an evaluation of the remaining connection needs of the system. AP St. 9-R at 37. The Company is also actively seeking to reduce inflow and infiltration ("I&I") in the collection system as described in its 2020 Chapter 94 Report. AP St. 9-R at 37.

During the course of the Treatment Train Project, two intervening events beyond the Company's control occurred that ultimately led to hydraulic overloads on the system. A combination of elevated precipitation levels and shifts to more full-time use of the residences at Masthope, as a result of the COVID Pandemic, caused hydraulic overloads on the system. AP St. 9-R at 33-36. PADEP issued a moratorium on new connections to mitigate the hydraulic overloads caused by these events. In response, Aqua PA submitted a Corrective Action Plan to PADEP, which is targeted at restoring or otherwise making available capacity to current and future connections at Masthope. AP St. 9-R at 37. The Corrective Action Plan is currently under review.

Masthope alleges that the hydraulic overloads and subsequent moratorium on new connections were a result of Aqua's improper planning. Specifically, Masthope witness Mr. Rosenthal stated that PADEP placed the restrictions on new connections "presumably based on a finding that the additional connection caused persistent hydraulic overload of the Masthope system." Masthope St. 1 at 7 (emphasis added). Masthope alleges that Aqua PA did not adequately plan for growth in the Masthope community and therefore did not timely plan for expansion of the wastewater treatment plant. Masthope St. 1 at 8.

Contrary to Masthope's allegations, Aqua PA properly planned for and projected overloading issues on the Masthope system and began capital project planning to address the issue dating back to the 2018-2019 timeframe. AP St. 9-R at 37. In 2017, there were 21 new connections on the system serving Masthope, yet the annual average flow from 2016 to 2017 only increased from 0.065 million gallons per day ("MGD") to 0.073 MGD, which is well within the treatment plant's permitted capacity of 0.1 MGD. The addition of 19 connections in 2020 does not explain the substantial increase in wastewater flows to the treatment plant. Intervening wet weather and usage-related events resulted in unexpected hydraulic overloads and accelerated the need for the capital upgrades to the Masthope system. As a result, the Company is currently in the process of completing Act 537 Sewage Facilities Planning for the wastewater treatment plant expansion. AP St. 9-R at 37.

At all times, Aqua PA has prudently evaluated the system serving Masthope and has fully addressed the service needs of the Masthope Community by promptly undertaking the necessary upgrades and expansions to remedy the hydraulic overloads with the ultimate goal of working with Masthope and PADEP to lift the mortarium on new connections. Aqua PA's actions with respect to the system serving the Masthope community are consistent with its obligation to

provide adequate, safe and reasonable service under Section 1501. Aqua PA remains committed to working with Masthope as these issues with PADEP are resolved.

2. The Commission Does Not Have Authority To Order Masthope's Recommendations Regarding PADEP's Chapter 94 Regulations.

Masthope witness Rosenthal recommends that the Commission assure that the Treatment Train Project results in the mitigation of PADEP's restriction on new connections in Masthope. AP St. 9-R at 11. Mr. Rosenthal also recommends that if PADEP denies Aqua PA's requests for 30 new home connections in 2021 and 15 additional new home connections in each year until the completion of the CAP, that Aqua PA be directed to appeal PADEP's decision and seek amendment of the CAP to mitigate any lost opportunity to develop homes in Masthope. Masthope St. 1 at 11. Finally, Mr. Rosenthal recommends that Aqua PA review its Chapter 94 reports with local communities to keep them apprised of the issues with the system and projections over the upcoming five years. Masthope St. 1 at 11-12. For the reasons explained herein and in the Rebuttal Testimony of Aqua PA witness Duerr, Mr. Rosenthal's recommendations are inappropriate for this base rate proceeding before the Commission and should be rejected.

Mr. Rosenthal's recommendation that the Commission should assure a certain outcome of a proceeding before PADEP is inappropriate and should be rejected. Although the expanded Treatment Train Project is intended to increase capacity and allow for new connections, and PADEP previously stated that it may modify or lift the moratorium on new connections upon approval of the CAP, neither Aqua PA nor the Commission can guarantee whether PADEP will lift the moratorium on new connections. AP St. 9-R at 38; Masthope Exhibit 1, Schedule 1. While the Commission undoubtedly has authority to require a utility to provide adequate, safe and reasonable service pursuant to Section 1501 of the Public Utility Code, the Commission does

not have authority over PADEP's implementation of its regulations, including the Chapter 94 process and related building restrictions. *See Feingold*, 383 A.2d at 794 (the Commission is a creature of statute and has only those powers which are expressly conferred upon it by necessary implication); *Rovin, D.D.S. v. Pa. PUC*, 502 A.2d 785 (Pa. Cmwlth. 1986) (the Commission does not have jurisdiction over complaint involving quality of water rather than quality of service); *Country Place Waste Treatment Co., Inc. v. Pa. PUC*, 654 A.2d 72 (Pa. Cmwlth. 1995) (no Commission jurisdiction over air quality within PADEP's jurisdiction rather than the quality of the service or facilities provided, which is within the Commission's jurisdiction); *Polites v. Pa. PUC*, 928 A.2d 388 (Pa. Cmwlth. 2007) (no Commission jurisdiction over complaint regarding company's testing methods for backflow prevention devices).

Mr. Rosenthal's recommendation that Aqua PA review its Chapter 94 reports with each municipality should be denied because it is unnecessary and beyond the scope of the Commission's authority to impose such a requirement. Aqua PA develops Chapter 94 reports for multiple communities. Chapter 94 reports are public documents, and any community can review them through PADEP. AP St. 9-R at 39. Aqua PA is under no obligation to seek public input or approval before submitting a Chapter 94 Report. Furthermore, as previously explained, PADEP's Chapter 94 regulations are within the purview of PADEP, and only PADEP, not the Commission, can make changes to how the regulations are carried out and what is required by the regulations.

Finally, Mr. Rosenthal's recommendation that Aqua PA appeal any PADEP decision that does not grant its request for new connections should be denied. It would be inappropriate and premature for the Commission in this base rate proceeding to require Aqua PA to appeal a future decision of PADEP without even knowing what that decision will be. There are many

considerations that need to be taken into account before any decision is made whether to appeal a PADEP decision. Only after the PADEP issues its decision and the parties have an opportunity to review that decision can the appropriate action be determined.

E. COVID-19 UNCOLLECTIBLES DEFERRAL

Aqua PA has proposed a conversative approach in addressing incremental bad debt expense related to the COVID-19 pandemic. As a part of its initial filing, Aqua PA proposed to simply receive continued authorization to defer incremental bad debt expense related to the COVID-19 pandemic. AP St. 1 at 23-24. Aqua PA explained that the Commission previously authorized utilities to create regulatory assets for incremental uncollectible expenses related to COVID-19 above those already embedded in base rates. AP St. 1 at 22.

By way of background, on March 6, 2020, Governor Wolf issued Proclamation of Disaster Emergency ("Emergency Proclamation"), which declared a state of emergency through Pennsylvania due to the COVID-19 pandemic. AP St. 1 at 22. As explained by Aqua PA witness Mr. Packer, "[t]he Emergency Proclamation authorized the suspension of regulatory statutes, rules or regulations to the extent compliance therewith would undermine emergency mitigation efforts." AP St. 1 at 22.

The Commission subsequently issued an emergency order on March 13, 2020, which it ratified along with two other emergency orders related to the pandemic on March 26, 2020. *See Re: Public Utility Service Termination Moratorium Proclamation of Disaster Emergency – COVID-19*, Docket No. M-2020-3019244 (Emergency Order dated March 13, 2020) ("*Emergency Order*"). The *Emergency Order* declared a termination moratorium for public utility services. AP St. 1 at 22; *see also Emergency Order*, at p. 1.

Further recognizing that the COVID-19 pandemic generally, and the service termination moratorium specifically, would likely increase costs to utilities (e.g., uncollectible expense), the

Commission issued another Secretarial Letter dated May 13, 2020. *See* Re: COVID-19 Cost Tracking and Creation of Regulatory Asset, Docket No. M-2020-3019775 (Secretarial Letter dated May 13, 2020) ("Secretarial Letter"). Therein, the Commission directed utilities to "account for prudently incurred incremental extraordinary, nonrecurring expenses related to COVID-19, which result from compliance with the *Emergency Proclamation* and *Emergency Order*." Secretarial Letter, at p. 1; AP St. 1 at 22. Furthermore, public utilities were specifically authorized to create regulatory assets for incremental uncollectible expenses (related to COVID-19) above those embedded in base rates since the issuance of the *Emergency Order*. *See* Secretarial Letter, at p. 2.

As anticipated by the Commission, Aqua PA experienced increased levels of unpaid billings or "bad debt", due to the service termination moratorium. AP St. 1 at 23. This increased the Company's uncollectible accounts expense above the amount currently embedded in its base rates, which were $2,425,823 for water and $217,335 for wastewater base systems during the HTY. AP St. 1 at 23. Aqua PA explained that it calculated these expenses by normalizing them to pre-pandemic levels, specifically the rate of bad debt expense implicitly authorized in the 2018 Base Rate Case. AP St. 1 at 23. The Company recorded a regulatory asset of $5,695,030 as a result of aging accounts receivable from its customers due to the termination moratorium. AP St. 1 at 23.

Although the service termination mortarium has ended, the Commonwealth of Pennsylvania continued to be impacted by the COVID-19 pandemic at the time of the Company's filing, and the Company explained that it is continuing to incur incremental levels of uncollectibles beyond the end of the HTY. AP St. 1 at 23. As such, Aqua sought continued

authorized to defer (not recover) these incremental expenses realized over and above its recovery levels for review and recovery in its next base rate case. AP St. 1 at 24.

I&E and OCA opposed the Company's proposal. I&E witness Ms. Wilson recommended that the Company provide support for the regulatory asset amount accumulated to date, and that it begin amortizing the balance over a three year period in the instant proceeding. I&E St. 1 at 38. Relatedly, I&E argued that, regardless of the support provided, the Company be ordered to discontinue recording a regulatory asset for incremental uncollectible expense related to COVID-19 after the effect date of new rates set in this proceeding. I&E St. 1 at 39. I&E further asserted that continued tracking of incremental uncollectible expense beyond the effective date of rates is not appropriate or necessary. I&E St. 1 at 39-41.[64] I&E further recognized that while the *PAWC COVID Deferral RD* recommended a hard cut-off date for accumulations of deferred uncollectible expense be established, the Commission declined to set such a cut-off date. I&E St. 1 at 40-41. I&E attempted to distinguish between that proceeding and the instant proceeding by arguing that PAWC had not filed a base rate case since its request for deferred accounting treatment, whereas Aqua PA's request for continued authorization to defer these expenses was made as a part of its base rate case. I&E St. 1 at 41.

OCA witness Mr. Smith argued that continued deferrals for an indefinite period beyond the FPFTY of this proceeding should not be permitted. OCA St. 1 at 63. He further recommended that, to the extent Aqua PA seeks to recover COVID-19 deferred costs, its claim

---

[64] I&E cited *Petition of Pennsylvania-American Water Company for Authorization to Defer, and Record as Regulatory Assets for Future Recovery: (1) Incremental Expenses Incurred Because of the Effects of the COVID-19 Emergency; (2) Revenue Reductions Attributable to the Effects of the COVID-19 Emergency; and (3) Carrying Charges on the Amounts Deferred*, Docket No. P-2020-3022426 (Recommended Decision dated June 30, 2021) ("*PAWC COVID Deferral RD*") and *Petition of Pennsylvania-American Water Company for Authorization to Defer, and Record as Regulatory Assets for Future Recovery: (1) Incremental Expenses Incurred Because of the Effects of the COVID-19 Emergency; (2) Revenue Reductions Attributable to the Effects of the COVID-19 Emergency; and (3) Carrying Charges on the Amounts Deferred*, Docket No. P-2020-3022426 (Opinion and Order entered Sept. 15, 2021) ("*PAWC COVID Deferral Order*").

be made through the end of this case's FPFTY and also reflect any incremental savings experienced by the Company. OCA St. 1 at 63.

Aqua PA rebutted the arguments of I&E and OCA. As an initial matter, Mr. Packer explained that "[t]he Company's request is simply allowing for time – time for the uncollectible expenses realized in 2020 to stabilize and return back to normal in 2021 and possibly fully mitigate with a slower recovery." AP St. 1-R at 7. Mr. Packer then providing the following example:

> As of October 31, 2021, the uncollectible expense deferral amount now is at approximately $4.7 million or $900,000 less than the balance as of the historic test year ended March 31, 2021 ("HTY"). The reduction was due to the fact that the Company was permitted to resume collection activities from the termination moratorium being lifted which was in place during the HTY. In turn, the reserves for uncollectible expenses improved due to the aging of our outstanding accounts receivable. To the extent this trend continues, then with time the Company's future claim for the deferred impact would be lower.

AP St. 1-R at 7. Indeed, by providing the Company more time to defer these expenses, customers would experience less of an impact. AP St. 1-R at 7.

Mr. Packer also highlighted the fact that the Company was not asking for "any time value of the money related to these deferrals." AP St. 1-R at 7. The Company and its shareholders are currently funding, and will continue to fund, the delayed cash inflow from aging accounts receivable. AP St. 1-R at 7. Thus, the Company's customers will not fund this aspect of the incremental costs the Company has incurred to provide continuous and reliable service in the face of a global pandemic.

Moreover, the Company has not sought authorization to defer "any incremental expenses for safety supplies, masks, hand sanitizers, social distancing signage, that were required in many

facilities." AP St. 1-R at 7. In this regard, the Company has been and will continue to be conservative in seeking to recover incremental COVID-19 related expense.

I&E's reliance on the *PAWC COVID Deferral RD* and *PAWC COVID Deferral Order* is misplaced. Specifically, in rejecting the administrative law judge's decision to establish a hard cut-off date for the accumulation of deferred expenses and savings due to the COVID-19 pandemic, the Commission explained:

> we agree with PAWC that it would be premature to conclude that the pandemic is over and that no additional related expenses will be incurred. Moreover, the Commission alerted all utilities that in any future rate proceedings determining whether a request for recovery of any regulatory asset related to the *Emergency Order* is just and reasonable, the Commission would also "consider during those proceedings other issues, *such as the appropriate period of recovery for the approved amount of the regulatory asset* or exogenous event treatment, any amount of carrying costs thereon, and other related matters." *May 2020 Secretarial Letter* at 3 (emphasis added).

PAWC Deferral Order, at p. 48 (emphasis in original). The Commission went on to state that it was appropriate to "defer <u>consideration of the period of recovery</u> for any regulatory asset treatment to a subsequent base rate proceeding." *Id.* (emphasis added). I&E's attempt to distinguish the Commission's reasoning in the *PAWC Deferral Order* from this proceeding, on the basis that Aqua PA is in a base rate proceeding, misreads the order. Aqua PA's request considers the period for recovery by specifically seeking authorization to defer establishment of the period of recovery for the regulatory asset.

Regarding the recommendation that the Company provide additional support for its regulatory asset and reflect a three-year amortization of the deferred incremental uncollectible accounts balance in this case, Mr. Packer made clear that "the Company is not requesting, at this time, to recover the incremental deferred expense" and, as such, "[t]he Company does not agree with I&E Wilson's recommendation." AP St. 1-R at 8. Furthermore:

> The Company in its response to OCA-X-7, provided a schedule showing the balances of Accounts Receivable ("A/R"), Reserve for Uncollectible Accounts, and finally its COVID-19 deferred account. It is clear from that schedule that there is a correlation between the increasing balances of A/R and Reserve for Uncollectible Accounts, and the requisite impact to the deferred regulatory asset balance. That response also shows the decline in the balance as I mentioned earlier. While I do not believe this information is necessary, the Company provided OCA-X-7 in response on this issue on November 3, 2021, and is included in my testimony as Aqua PA Exhibit WCP-1-R.

AP St. 1-R at 8. Not only has the Company provided adequate support for its regulatory asset, but the information provided corroborates the Company's basis for seeking continued authorization to defer these expenses: as more time passes, uncollectible expenses will stabilize and return back to normal, and possibly fully mitigate.

Finally, while the Company partially agreed with OCA's recommendation that its regulatory balance be offset by savings in expense in accounts other than uncollectible accounts expense experienced due to COVID-19, those savings were minimal. AP St. 1-R at 9. The Company providing a quantification of "those savings in the response to OCA-X-10, whereby [Mr. Packer] reviewed HTY accounts for these categories and identified approximately $360,000 in savings compared to historical averages for the same accounts." AP St. 1-R at 9.

Based off the information provided by the Company, I&E subsequently withdrew and modified its recommendation to require the Company (1) to track further COVID-19 related reductions to uncollectibles, (2) to claim the balances in its next base rate case and propose amortization of the balance at that time over a number of years, and (3) to be allowed to claim no interest associated with the deferral. I&E St. 1-SR at 50. I&E further recommended the Company not be permitted to claim any new increases in COVID-19 related uncollectibles in a future proceeding, but reflect future reductions to the deferred balance identified by Mr. Packer. I&E St. 1-SR at 51. OCA witness Smith continued to recommend that the Company cut off

recording incremental deferred uncollectible expenses related to COVID-19 as of the end of the FPFTY, but like I&E argued that any future reductions to the deferred balance be reflected in a future claim to recover the deferred balance. OCA St. 1SR at 48-49.

The rebuttal positions of I&E and OCA are one-sided and should not be adopted. Both parties want to set an end-date for the calculation of COVID-19 deferrals that increase, but want to capture any future decreases to the balance. Aqua PA's proposal, in contrast, is a balanced approach, that continues to determine changes to the COVID-19 uncollectible accounts balance, whether higher or lower, until the Company's next rate case.

For these reasons, Aqua PA's request for continued authorization to defer incremental uncollectible expense related to COVID-19 is reasonable and should be approved.

F. RESPONSES TO DIRECTED QUESTIONS OF COMMISSIONER YANORA

On September 16, 2021, Commissioner Ralph V. Yanora posed ten (10) Directed Questions to be answered and examined as a part of these proceedings. The ALJ's Prehearing Order dated October 19, 2021, requires that:

> The appropriate parties shall include an appendix which answers each of the directed questions posed by Commissioner Ralph V. Yanora by letter dated September 16, 2021. Each question shall be set forth in question and answer format. Answers may be a citation to the testimony or exhibit where the answer is clearly set forth.

On November 1, 2021, Aqua PA served responses to the Directed Questions upon all of the parties. As a part of its rebuttal testimony, Aqua PA further included its responses to these questions as AP Exhibit TMD-4-R. Pursuant to the ALJ's directive in the October 19, 2021 Prehearing Order, Aqua PA has included AP Exhibit TMD-4-R as Appendix D to this Brief and fully incorporates the information contained therein as a part of its presentation in this Brief.

IX. RATE STRUCTURE

A. COST OF SERVICE

The purpose of the cost allocation studies performed for Aqua PA is to allocate the total water and wastewater cost of service to the several customer classifications. *See* AP St. 5 at 3, 19. Aqua PA prepared a cost allocation study (AP Exhibit 5-A, Part I) for its water operations, as well as separate cost allocation studies (AP Exhibit 5-B, Part I) for its wastewater operations. With respect to its wastewater operations, Aqua PA prepared separate cost allocation studies for its wastewater Base Operations and the separate operating divisions for Limerick, East Bradford, Cheltenham, East Norriton and New Garden. *See* AP St. 5 at 18-19. The separate operating cost allocation studies from the Base Operations are wastewater systems acquired since the Company's 2018 Base Rate Case. AP St. 1 at 7. In each of the studies prepared, the total costs of service are allocated to the various customer classifications in accordance with generally accepted cost of service principles and procedures. AP St. 5 at 3, 19. The cost of service allocation study results indicate the relative cost responsibilities of each class of customer. AP St. 5 at 4. This information is then used to determine how the proposed rate increase should be allocated among the rate classes. The goal is to move each rate class towards the system rate of return. This can be accomplished by assigning a greater than system average increase to classes paying less than their cost of service, and assigning a less than average increase to classes paying more than the system average rate of return. As explained below, other factors may be considered in revenue allocation, such as the amount of the rate increase and gradualism.

Although class cost of service studies may appear to have great precision, the Commission has repeatedly recognized that the cost of service study is only a guide to designing rates and is only one factor, albeit an important one, to be considered in the rate setting process. *See, e.g.*, *Aqua 2008*, 2008 Pa. PUC LEXIS 50; *Pa. PUC v. West Penn Power Company,* Docket

Nos. R-901609, et al., 1990 Pa. PUC LEXIS 142, 73 Pa. PUC 454, 119 P.U.R.4th 110 (Order dated Dec. 13, 1990); *Pa. PUC v. Pennsylvania Power & Light Co.,* 55 PUR 4th 185, 249 (Order dated Aug. 19, 1983). Cost allocation studies require a considerable amount of judgment and are described as more of an accounting/engineering art rather than science. *Application of Metropolitan Edison Co.*, Docket No. R-00974008 (Order dated June 30, 1998); *Pa. PUC v. Pennsylvania Power & Light Co.,* 55 PUR 4th 185 (Order dated Aug. 19, 1983).

The Commonwealth Court has, however, concluded that the class cost of service is the "polestar" of utility ratemaking. *See Lloyd v. Pa. PUC*, 904 A.2d 1010, 1020 (Pa. Cmwlth. 2006), *appeal denied*, 916 A.2d 1104 (Pa. 2007) ("*Lloyd*"). Despite its heightened importance in the ratemaking process, cost allocation remains an inexact science, and there is no single "correct" cost allocation methodology. There are, however, two fundamental principles—cost causation and consistency. Cost causation means that costs should be allocated based on what causes a cost to be incurred or what causes a cost to vary. Consistency means that once a reasonable cost allocation methodology is established, it should not be changed without a compelling reason.

The Company's water cost allocation study uses the base-extra capacity method, as described in water rates manuals published by the American Water Works Association, to allocate pro forma costs. AP St. 5 at 4; *see also* AP Exhibit 5-A, Part I, pages 3-4. Aqua PA witness Ms. Heppenstall further explained that "[t]his method is a recognized method for allocating the cost of providing water service to customer classifications in proportion to the classifications' use of the commodity, facilities and services." AP St. 5 at 4. Moreover, the base-extra capacity method is generally accepted and has been used by the Company and accepted by the Commission in the Company's rate cases for over 30 years. AP St. 5 at 4.

Aqua PA witness Ms. Heppenstall further described the procedure followed in the Company's water cost allocation study as follows:

> Each identified classification of cost in the pro forma cost of service was allocated to the customer classifications using appropriate allocation factors. This allocation is presented in Schedule D on pages 10 through 16 of Exhibit No. 5-A, Part I. The account numbers and associated items of cost, which include operation and maintenance expenses, depreciation expense, taxes and income available for return, are identified in columns 1 and 2 of Schedule D. The cost of each item, shown in column 4, is allocated to the several customer classifications based on allocation factors referenced in column 3. The development of the allocation factors is presented in Schedule E of the exhibit.

AP St. 5 at 4-5. She further provided examples using larger cost items to illustrate the principles and considerations of the base-extra capacity methodology. *See* AP St. 5 at 5-7. For example,

> Water purchased for resale, purchased electric power and treatment chemicals are examples of costs that tend to vary with the amount of water consumed <u>and are thus considered base costs</u>. They are <u>allocated to the several customer classifications in direct proportion to the average daily consumption of those classifications</u> using Factor 1. The development of Factor 1 is shown in Schedule E of Exhibit No. 5-A, Part I.
>
> Other sources of supply, pumping, purification, and transmission costs are <u>associated with meeting usage requirements in excess of the average, generally to meet maximum day requirements</u>. Costs of this nature were allocated to customer classifications <u>partially as base costs, proportional to average daily consumption, partially as maximum day extra capacity costs, in proportion to maximum day extra capacity</u>, and, in the case of certain pumping stations and transmission mains, partially as fire protection costs, through the use of Factors 2 and 3. The development of the allocation factors, referenced as Factors 2 and 3, is shown in Schedule E of Exhibit No. 5-A, Part I.

AP St. 5 at 5 (emphasis added).[65] In this regard, the Company has fully supported the use of the base-extra capacity method used in its cost allocation study.

[65] Ms. Heppenstall explained the calculation of the maximum day and maximum hour ratios utilized in Factors 2, 3, 4 and 5 of the water cost allocation study, which are the same ratios used in the study presented by

The Company's wastewater cost allocation studies use the functional cost allocation method described in "Financing and Changes for Wastewater Systems," Manual of Practice No. 27, which Ms. Heppenstall testified is published by the Water Environment Federation. AP St. 5 at 20. The functional cost allocation method allocates cost of providing wastewater service in proportion to each customer classifications' use of the service provider's facilities and services. AP St. 5 at 20. "Costs are assigned to cost components using predominant operational purposes as cost-causative factors." AP St. 5 at 20. Moreover, the functional cost method is generally accepted in the industry. AP St. 5 at 20.

Ms. Heppenstall further explained the procedure used under the functional cost methodology as follows:

> Each element of the cost of service is allocated to customer classifications according to the functional categories of flow, infiltration and inflow ("I&I"), customer facilities and customer accounting. The functional costs are allocated to customer classifications based on the amount of flow contributed to the system, the amount of I&I allocated to each class, and the number and relative size of customers.

AP St. 5 at 20.

Importantly, no parties disputed the Company's use of the base-extra capacity method for purposes of its water cost allocation study and no parties disputed the Company's use of the functional cost allocation method for purposes of the wastewater cost allocation studies. With respect to the principle of consistency noted above, the Company's cost allocation studies utilize generally accepted methods, which are the same methods used by the Company in prior rate cases.[66] Relatedly, each of the methods used by the Company comply with the principle of cost

---

Aqua PA in its 2018 Base Rate Case. *See* AP St. 5 at 7-8. The customer class extra capacity factors used by the Company are also the same as those used by the Company in the 2018 Base Rate Case. AP St. 5 at 9.

[66] *See also* Masthope St. 1 at 5 (noting that the methods used by the Company appear consistent with the method used in prior cases).

causation, as each method allocates costs based on what causes a cost to be incurred or what causes a cost to vary among the various customer classifications. Therefore, the ALJ and the Commission should accept the methodologies used in each of the Company's cost allocation studies as reasonable.

B. REVENUE ALLOCATION

1. Introduction.

While Aqua PA's proposed allocation of revenue among the customer classifications is primarily driven by the cost to serve each class, the Company considered the principle of gradualism and attempted to avoid significant rate increases to certain classifications under its proposed revenue allocation. As indicated by the Commonwealth Court in *Lloyd*, cost of service is the "polestar" of utility rates. *Lloyd*, 904 A.2d at 1020. Other factors, such as gradualism, may be considered so long as they do not "trump" cost of service as the primary basis for allocating the revenue increase. *Id.* at 1020-21.

Consistent with the Commonwealth Court's directive in *Lloyd*, a proposed revenue allocation will be found to be reasonable where it moves distribution rates for each class closer to the full cost of providing service. *Pa. PUC, et al. v. PPL Electric Utilities Corp.*, Docket Nos. R-00049255, et al., 2007 Pa. PUC LEXIS 55 (Order on Remand entered July 25, 2007).

Even prior to *Lloyd*, the importance of properly allocating a proposed revenue increase among a utility's rate classes was recognized by Pennsylvania appellate courts. In *Philadelphia Suburban Water Company v. Pa. PUC*, the court has stated that:

> in order for a rate differential to survive a challenge brought under Section 1304 of the Public Utility Code [bar against rate discrimination], the utility must show that the differential [different rates among the classes] can be justified by the difference in costs required to deliver service to each class. The rate cannot be illegally high for one class and illegally low for another.

808 A.2d 1044, 1060 (Pa Cmwlth. 2002). Indeed, any significant departure from the results of a cost of service study requires the proponent to fully justify the deviation.

However, the Commission has a great deal of discretion in determining the allocation of costs in a base rate proceeding. It is well settled that the establishment of a rate structure is an administrative function peculiarly within the expertise of the Commission. *Pittsburgh v. Pa. PUC*, 78 A.2d 35 (Pa. Super. 1951). Further, the courts have continually recognized that the findings of the Commission, if supported by competent evidence, will not be disturbed. *United States Steel Corp. v. Pa. PUC*, 390 A.2d 865 (Pa. Cmwlth. 1978); *Philadelphia Suburban Transportation Co. v. Pa. PUC*, 281 A.2d 179, 185 (Pa. Cmwlth.1971). *In Peoples Natural Gas Co. v. Pa. PUC*, 409 A.2d 446 (Pa. Cmwlth. 1979), the Commonwealth Court held, "there is no set formula for determining proper ratios among the rates of different customer classes. What is reasonable under the circumstances, the proper difference among rate classes, is an administrative question for the Commission to decide." *Id*. at 456 (internal citation omitted).

As described by Ms. Heppenstall, the Company's proposed revenue allocation for both water and wastewater involves a determination of the allocated cost responsibilities and the percentage of revenue under existing rates and a determination of the percentage cost responsibilities and percentage of pro forma revenues under proposed rates for each customer classification. *See* AP St. 5 at 10, 21. Once these determinations were made, the Company proposed revenues to be allocated to each customer classification that would be required to move that class toward the cost of service. *See* AP St. 5 at 10, 21; *see also* AP Exhibit 5-A, Part I, Schedule A and AP Exhibit 5-B, Part I, Schedule WW-A. In addition, the Company determined an amount of wastewater revenues to be recovered in water rates pursuant the Act of Feb. 14, 2012, P.L. 72, No. 11 ("Act 11"). AP St. 5 at 10; *see also* 66 Pa.C.S. § 1311(c). As explained

below, the Company's proposed water and wastewater revenue allocations, as well as the proposed Act 11 allocation of a portion of wastewater revenues to be recovered in water rates are reasonable and should be approved.

2. Act 11 Revenue Allocation.

a. Applicable Legal Principles.

Under Section 1311(c) of the Public Utility Code:

> When any public utility furnishes more than one of the different types of utility service, the commission shall segregate the property used and useful in furnishing each type of such service, and shall not consider the property of such public utility as a unit in determining the value of the rate base of such public utility for the purpose of fixing base rates. A utility that provides water and wastewater service shall be exempt from this subsection upon petition of a utility to combine water and wastewater revenue requirements. The commission, when setting base rates, after notice and an opportunity to be heard, may allocate a portion of the wastewater revenue requirement to the combined water and wastewater customer base if in the public interest.

66 Pa.C.S. § 1311(c) (emphasis added). The clear language of Act 11 allows a utility that provides both water and wastewater service, such as Aqua PA, to allocate a portion of the wastewater requirement to the combined water and wastewater customer base if doing so is in the public interest. *See, e.g.*, *Pa. PUC, et al. v. Aqua Pennsylvania, Inc.*, Docket Nos. R-2018-3003558, R-2018-3003561, et al., 2019 Pa. PUC LEXIS 170 (Order entered May 9, 2019) ("*Aqua 2018*"); *Pa. PUC v. Pennsylvania-American Water Company*, Docket No. R-2017-2595853 (Order entered December 7, 2017) ("*2017 PAWC Order*"); *Pa. PUC v. Pennsylvania-American Water Company*, Docket No. R-2013-2355276 (Order entered December 19, 2013) ("*2013 PAWC Order*"); *Pa. PUC, et al. v. The York Water Company*, Docket Nos. R-2012-2336379, et al., 2012 Pa. PUC LEXIS 1881 (Recommended Decision dated Dec. 6, 2013), *adopted without modification* (Order entered Jan. 9, 2014) ("*York Water 2013*").

In the Commission's Orders implementing its *Policy Statement Re: Incentives for the Acquisition and Merger of Small, Nonviable Water and Waste Water Systems*, Docket No. M-00950686, (Order entered February 23, 1996) ("Policy Statement") the Commission explained that it is in the public interest for larger and more stable utilities to acquire nonviable wastewater systems.[67] Nonviable systems may not be economically self-sustaining, may not meet all regulatory mandates, and may have quality issues. Proposed Policy Statement, at pp. 2-3.

The Commission noted that for these systems, the customer base is too small to support the costs of a well-managed and properly functioning system, and may not be able to complete appropriate infrastructure upgrades due to lack of available capital. *Id*., at p. 4. The Commission stated that the public interest is served by the elimination of these inadequately operated small companies. *Id*., at p. 8. The Commission has also previously noted that spreading costs across a larger rate and revenue base is in the public interest because it ameliorates the impact of major capital additions needed from time to time in every service area, promotes flexibility in timing and financing major capital additions, and mitigates instability. Policy Statement at p., 21-22, citing *Pa. PUC v. Western Pennsylvania Water Co.*, 72 PUR 4th 103 (1986).

In addition, in the Commission's Tentative Implementation Order on Act 11, issued on May 10, 2012 at Docket No. M-2012-2293611, the Commission noted that one of the benefits of 1311(c) is that the costs of necessary upgrades to wastewater systems to maintain safe and reliable service, which can be substantial on a stand-alone basis, can be spread among the common customer base of water and wastewater utilities. *Tentative Implementation Order*, at p. 5. The Commission reaffirmed this statement in its Final Implementation Order. *Final*

[67] While the *Proposed Policy Statement Re: Incentives for the Acquisition and Merger of Small, Nonviable Water Systems* ("Proposed Policy Statement") at this docket, issued on July 10, 1995, addressed only nonviable water systems, the Commission's Policy Statement noted that the Proposed Policy Statement should be expanded to include wastewater systems. Policy Statement at p. 20.

Implementation Order, at p. 8. The public interest is served if properly incurred costs to upgrade a nonviable system can be allocated to the combined wastewater and water customer base. Absent such allocation, larger, well-managed water utilities, like Aqua PA, will be discouraged from acquiring and upgrading small nonviable wastewater systems, because the resulting rate increases to wastewater customers may be substantial.

Furthermore, as with the Commission's discretion to generally determine the allocation of costs in a base rate proceeding, *see* Section IX.B.1. *supra*, the Commission also has substantial discretion in its allocation of wastewater revenues to water customers under Act 11.

b. It Is In The Public Interest To Allocate A Portion Of The Wastewater Revenue Requirement To Water Customers.

Aqua PA proposed to allocate a portion of the wastewater revenue requirement to its water customers in order to provide a path for gradualism for the subject systems, as this is the first case in which the Commission will consider increases to the rates for these systems. AP St. 1-R at 23-24. Indeed, Aqua PA witness Mr. Packer further testified that, in order to avoid substantial rate hikes which is sometimes referred to as rate shock to wastewater customers that will be subject to the first rate increase as a part of this case, "the principles of gradualism should prevail and be utilized to mitigate these first rate increases." AP St. 1-R at 25.

Importantly, no party asserts that Aqua PA should not be permitted to allocate any of the wastewater revenues for its Base and other operating divisions to the combined wastewater and water customer base, and no party asserts that an allocation of wastewater revenues to water customers is not in the public interest. Rather, various parties have disputed the amount of the wastewater revenue requirement to be allocated to water customers. *See* Section IX.B.2.c. *infra*. Aqua PA addresses the various alternative Act 11 recommendations advanced by the other parties below. However, the ALJ and the Commission should find and determine that it is in the

public interest to permit Aqua PA to allocate a portion of the wastewater revenue requirement to water customers, pursuant to 66 Pa.C.S. § 1311(c).

c. The Company's Proposed Act 11 Allocation Is Reasonable and Will Mitigate Significant Rate Impacts for Wastewater Customers During This First Base Rate Case.

Aqua PA's proposed amount of Act 11 allocation from wastewater to water rates was determined by subtracting the proposed level of wastewater revenue after various increases from the pro forma cost of wastewater service for the twelve months ended March 31, 2023 from the revenue requirement for each area. AP St. 5 at 10. The Act 11 allocation by class is equal to the wastewater cost of service by class less proposed revenues. AP St. 5 at 10. Each Schedule A included in AP Exhibit 5-B, Part I regarding the Company's wastewater operating divisions presents the total Act 11 revenues for each division that Aqua PA proposed to transfer to the water cost of service study. *See* AP St. 5 at 20. The Company determined it was necessary to allocate $20,839,425 of wastewater revenues to water customers, which is the proposed wastewater revenue shortfall that remains after increasing and consolidating various wastewater rates to a level that moves each division towards the cost of service while mitigating significant rate impacts associated with this first rate increase. This represents an allocation of approximately 30% of the Company's proposed revenue requirement from wastewater to water. AP St. 1-R at 24. The Company noted that this is not the first case in which the Company has allocated a portion of wastewater revenue requirement to water rates. However, the magnitude of the shift is larger given the number and size of wastewater system acquisitions since the Company's last rate case. *Id*.

OCA, I&E and OSBA disputed the Company's proposed Act 11 allocation and proposed alternatives that decreased the amount of wastewater revenues to be allocated to water customers. As an initial matter, the Company notes that each of these alternative proposals

would result in an **increase** to the revenues allocated to each wastewater operating division and resultantly further increase the wastewater rates paid by customers in each division relative to the Company's proposal. In this regard, each of the alternative allocations advanced by the other parties would depart from the principle of gradualism and fail to substantially mitigate the rate increases these customers would receive in this case.

Before addressing the specific recommendations made by each of these parties, Aqua PA submits that the general basis for I&E's and OCA's proposed adjustments to the Act 11 allocation should be rejected. As noted by Aqua PA witness Mr. Packer, both OCA and I&E arrive at a similar approximately $9-10 million reduction in the allocation of wastewater revenues to water. AP St. 1-R at 23.

OCA witness Mr. Watkins examines the purchase price of each acquired wastewater system in a Section 1329 proceeding relative to its net book value, dubs this difference an "acquisition premium" and asserts the Act 11 allocation should be reduced by these premiums. *See* AP St. 1-R at 23; AP St. 5-R at 6. However, Mr. Watkins is incorrect in his assertion that Section 1329 applications allow for acquisition premiums; Section 1329 sets the rate base for the acquisition, which is based on the fair market value of the system and not an acquisition premium. AP St. 1-R at 23; AP St. 5-R at 6. Moreover, Mr. Packer explained that:

> the intent of [Mr. Watkins'] analysis is to support higher rate increases for the systems acquired via Section 1329 since the customers of those systems will benefit as constituents of their respective township or municipality insofar as the proceeds from their system sale are used to reduce, stabilize, or eliminate municipal costs recovered through taxes. While I do not disagree that there is a benefit to customers in these systems as far as local tax savings, I believe the principles of gradualism should prevail and be utilized to mitigate these first in rate increases. All of these acquisitions were approved individually by the PUC and deemed in the public interest. That determination was not a short term only assessment. The PUC understands that these systems will be

> owned and operated by the Company for many years and there will be plenty of opportunity to adjust the rate design for these systems to balance the recovery of the cost of utility service. As the Company builds a larger wastewater footprint, the ability to adjust the rates between zones and systems will only be enhanced, as we have seen for many years on the water utility side. It is for these reasons that I believe the adjustments to reduce the Act 11 allocation should be rejected.

AP St. 1-R at 25-26. Nothing in either Section 1329 or Section 1311(c) indicates that the revenue requirement resulting from the rate base determination under Section 1329 may not be allocated to water customers under Section 1311(c). The legal standard under Section 1311(c) is "public benefit," without regard to the provisions of Section 1329. As the Commission recently stated in *PAWC 2020*, Order at 82:

> We also agree with the Company's argument that, in the circumstances, applying Section 1311(c) in conjunction with Section 1329 is in the public interest because otherwise, larger viable public utilities would be discouraged from acquiring municipal and wastewater systems and contravene the legislative intent and the Commission's policy of encouraging consolidation and regionalization.

I&E witness Mr. Kubas implies that municipal governments believe the cost of acquiring the subject systems would be borne solely by the Company's existing customers and, therefore, asserts the proposed allocation is not fair. I&E St. 5 at 37. Mr. Kubas' claim ignores the fact that the Company explains how the purchase price will impact future customer rates as a part of the Section 1329 process, and the fact that the Company engages with and educates municipal leaders on the ratemaking process. AP St. 1-R at 24. Furthermore, Mr. Packer explained that:

> the acquisitions of these systems were all approved by the PUC as in the public interest <u>with full knowledge and awareness of the revenue requirement deficiencies that existed at acquisition</u>. Moreover, due to the results of various settlements and legal appeals, the customer notifications sent to both existing and acquired customers is even more clear as to the potential impacts on rates of acquisitions acquired under Section 1329. Such notification via individual customer notice, makes it clear that the

> impacts are estimates and subject to change by the PUC at their discretion. It should be noted that the notice to customers is at full revenue deficiency of the acquired systems.

AP St. 1-R at 24 (emphasis added). The Commission's actions and the notice provided to municipal governments and acquired customers belies Mr. Kubas' misconception.

Moreover, Mr. Kubas' insinuation that the allocation proposed by the Company in this base rate proceeding will be indefinitely applied is incorrect. As explained by Mr. Packer, "[i]t is not the Company's position that once an allocation is established in a previous rate case, that the same allocation will be used indefinitely." AP St. 1-R at 25. Indeed, the Company's goal is to gradually group and consolidate divisions towards Rate Zones. AP St. 1 at 29. In this regarding, Mr. Kubas' insinuation that this allocation will be indefinite and, therefore, "untenable" has no merit.

Mr. Kubas also recommended that the Company break out its wastewater filings into two separate rate cases and two separate revenue requirements. *See* I&E St. 1 at 65-66. This is a step backward and is not supported by Commission policy or prior precedent. Single tariff pricing and consolidation provides efficiencies and cost savings. *See* Policy Statement, at p. 4, *Tentative Implementation Order*, at p. 5. Mr. Kubas' recommendation also has significant accounting, tracking, operational and rate impacts.[68] Moreover, it would likely put the Company at a competitive disadvantage from other bidders in future acquisition opportunities. In addition, the Company committed to filing a cost of service study for its newly acquired systems in this base

[68] Specifically, it would frustrate the benefits of Act 11, as well as add additional complication to future rate case filings. *See e.g.*, AP St. 1-R at 25 (explaining that there will be time to balance the recovery of cost of service of these systems over time); AP St. 3-R at 7 (noting the additional complication and cost associated with the preparation and filing of multiple cost of service studies).

rate as a part of the repsective acquisition Orders, not indefinitely. The Commission should not dictate how the Company will file its next base rate proceeding absent its agreement.[69]

Turning next to the specific proposals regarding Act 11 proposed by OCA, I&E and OSBA, OCA witness Mr. Watkin's proposed rate design "attempts to reduce Act 11 subsidy by the revenue requirement associated with his 'described wastewater acquisition premiums' for the areas of Limerick, East Bradford, Cheltenham, East Norriton and New Garden, Rate Zones 7 through 11, which he calculates to be $10,055,979." AP St. 5-R at 6; *see also* OCA St. 4 at 6-7. Mr. Watkins' acquisition premiums discussion is flawed, as explained above. In addition, Mr. Watkins proposed to allocate the increase in wastewater rates "to the acquired areas based on their current rate revenues." AP St. 5-R at 6. However, due to constraints he put on rate design, Mr. Watkins was "only able to add additional revenue of $5,591,600 from these acquired systems." AP St. 5-R at 6. He then doubled the increase to the legacy systems (Wastewater Base Operations) to produce additional revenues of $3,473,445 and arrive at a total additional wastewater revenue increase of $9,065,045. AP St. 5-R at 6.

Mr. Watkins' proposed adjustments to the Act 11 wastewater revenues allocation should be rejected. As explained by Aqua PA witness Ms. Heppenstall:

> he increases the revenues for this rate zone by $833,254 or 83.48%, rather than the 35.90% recommended by the Company. In addition, he arbitrarily doubles the Company's recommended increase to all rate zones in the legacy system, including those areas that already have high monthly bills, such as Rate Zones 4 and 5, raising their average monthly bills to between $110.24 and $187.91 per month (See GAW-4-page 2). By moving revenues toward the cost of service, he ignores the concept of gradualism by recommending large rate increases such as an overall increase of 130.67% for Rate Zone 7, Limerick. Finally, he oddly doubles the <u>decrease</u> to the Pinecrest area.

[69] The Commission is not empowered to act as a "super board of directors." *See Met. Ed. Co. v. Pa. PUC*, 437 A.2d 76, 80 (Pa. Cmwlth. 1981). As such, the management of a utility is left to its owners in the first instance, unless such management is shown to be an abuse of discretion or arbitrary. *Id.*

AP St. 5-R at 6-7. As such, Mr. Watkin's recommendations are arbitrary and contrary to the concepts of gradualism. AP St. 7-R at 7.

OCA's allocation of the reduction to Act 11 revenues is also flawed. Mr. Watkins "allocates the reduction by rate zone and by class based on the Company's proposed revenue increase, less public fire and contract revenue." AP St. 5-R at 7. However, "the proper method of allocation is to review each wastewater cost of service and calculate the difference between the proposed revenue and cost of service by class and then allocate this amount to the same class in the water cost of service." AP St. 5-R at 7. Mr. Watkins' "across the board" allocation does nothing more than "give[] undue credit to classes that received little original allocation of the Act 11 subsidy." AP St. 5-R at 7.

OCA witness Mr. Watkin's attempts to address this latter allocation error in his surrebuttal testimony. OCA St. 4-SR at 4-5; Schedule GAW-6. However, as Ms. Heppenstall explains, Mr. Watkins "correction" still does not fix his error:

> Mr. Watkins misunderstands my objection. In his Schedule GAW-6 attached to his direct testimony, he shows a credit related to the reduction in Act 11 funds from the revenue allocations proposed by the Company to the Industrial and Public classes of $329,757 and $146,042, respectively. However, the Company only allocated Act 11 funds to these customer classes of $528 and $93,398, respectively (Exhibit 5-A, Part I, Schedule A). At the most these classes should be credited the amount allocated to them by the Company, not the credits recommended by Mr. Watkins.

AP St. 5-RJ at 2.[70]

I&E witness Mr. Kubas recommends a number of changes to the Company's proposed rate design, in order to decrease the Act 11 allocation from wastewater to water customers. *See*

[70] Aqua PA notes that OSBA witness Mr. Kalcic further addressed this issue in his surrebuttal testimony, and explained that OCA was improperly seeking to have *non-residential* water customers pay for the allocation of revenues from *residential* wastewater customers. *See* OSBA St. 1-SR at 12-13.

generally I&E St. 5; *see also* AP St. 5-R at 20-21. As explained by Aqua PA witness Mr. Packer, the focus of these adjustments is Mr. Kubas' concept of "the fairness of the allocation from systems acquired under Section 1329 proceedings," *i.e.*, the systems reflected in Rate Zones 7-11, with reductions to the allocation of revenue from Rate Zones 1-6. AP St. 1-R at 23. Mr. Kubas ultimately recommends an Act 11 allocation of approximately $10,126,660 (or a reduction of approximately $10 million to the Company's proposed allocation). *See* I&E St. 5 at 6; I&E Exhibit 5, Schedule 1, page 4.

Aqua PA witness Ms. Heppenstall summarized Mr. Kubas' proposals and explained that the various rate design changes proposed by Mr. Kubas should be rejected because, *inter alia*, they would result in rate shock. AP St. 5-R at 20-24.[71] She explained that "Mr. Kubas' goal in revising rates in Zones 1 through 6 is to reduce the $13.453 million Act 11 contribution related to the wastewater customers in these rate zones." AP St. 5-R at 20. However, his specific proposals for Rate Zones 1-6 should be rejected because the additional increases proposed by Mr. Kubas would constitute rate shock. AP St. 5-R at 21.

Ms. Heppenstall further explained that each of the changes proposed by Mr. Kubas to Rate Zones 8, 9, 10 and 11 would similarly result in additional rate increases and constitute rate shock. Indeed, with specific regard to Mr. Kubas' proposals for Rate Zones 8, 9, 10 and 11, Ms. Heppenstall explained that his recommendations would result in an increase to the average residential customer's bill of 74.2% (Zone 8 multi-family or townhouse customers),[72] 56% (Rate Zone 9),[73] 72.6% (Rate Zone 10, East Norriton),[74] 99.4% (Rate Zone 10, Whitpain),[75] and 79.8%

[71] The Company explained that Mr. Kubas accepted its proposed changes with respect to Rate Zone 5, and that it would not contest Mr. Kubas' rate design for Rate Zone 7. AP St. 5-R at 21, 22.

[72] AP St. 5-R at 22.

[73] AP St. 5-R at 23.

[74] AP St. 5-R at 23.

[75] AP St. 5-R at 23.

(Rate Zone 11).[76] In each instance, Mr. Kubas' proposals would result in increases for each zone that exceeds what the Company has deemed to be a reasonable increase in the average customer's bill.

I&E pivoted in its surrebuttal testimony and attempted to respond to Ms. Heppenstall's testimony by arguing that one could assume any percentage increase less than the one proposed by the Company in Rate Zone 7 (Limerick), *i.e.*, 86.7%, would not be considered rate shock. I&E St. 5-SR at 10. This argument, however, is divorced from the context of the increase to Limerick customers. Ms. Heppenstall explained:

> This group of customers currently has one of the lowest monthly bills of any of the rate zones. The average bill for a residential customer in Limerick (at 4,000 gallons) is $39.73. Therefore, a large percentage increase of 86.7% equates to a smaller *dollar* amount of increase ($33.22) than if the same increase was applied to other rate zones whose present rates are over $100 per month, which would equal over an additional $86.70 per month.

AP St. 5-RJ at 3. While the percentage increase in a customer's monthly bill is important, the dollar increase must also be considered when assessing whether an increase constitutes rate shock.

OSBA witness Mr. Kalcic recommended an Act 11 allocation of $18.580 million. OSBA St. 1 at 17. As explained by Aqua PA witness Ms. Heppenstall, OSBA arrives at this recommendation by:

> increasing the revenue from the [wastewater] base (Rate Zones 1 through 6) areas by 24.8% (1.5X the system average increase in water revenues of 16.9%) and the New Garden, Rate Zone 11, revenues by 74.6% (2X the wastewater system average increase). This adjustment to rates would reduce the Act 11 subsidy from $20,839,425 to $18,580,203.

[76] AP St. 5-R at 23.

AP St. 5-R at 3-4. In comparison, the Company recommended an increase to Rate Zones 1 through 6 of 19.3% and New Garden, Rate Zone 11 by 37.0%. AP St. 5-R at 4.

OSBA's alternative Act 11 allocation should be denied. As explained by Ms. Heppenstall:

> [OSBA's proposed] additional increase for these rate zones would increase the average bill for a residential customer in Rates Zones 1, 1A, 1B and 2 beyond the Company's proposed level of $77.49, a 20.2% increase per month, to approximately $83.00, a 30% increase per month. The other rate zones included in the base area, Rate Zones 3 through 6 would not absorb this increase as their rates or their increase are higher than those of Rate Zones 1, 1A, 1B and 2. Therefore, the Company disagrees with this additional increase. In addition, the increase to New Garden would be contrary to the concept of gradualism and, as the present monthly bill for an average residential customer is $73.03, an increase of 74.6% would increase a residential monthly bill to over $125.00. ($73.03 X 1.746=$127.51). Only Rate Zone 5 would have a higher average monthly bill. In contrast, the Company recommends a similar 75% increase to Rate Zone 7, Limerick, as the wastewater present rates are much lower than New Garden's rates.

AP St. 5-R at 4. Aqua PA's rebuttal testimony makes clear that OSBA's proposed Act 11 allocation would force certain wastewater Rate Zones to absorb additional rate increases in violation of the concept of gradualism.

d. Conclusion Regarding Act 11 Allocation.

Contrary to the alternative Act 11 allocations proposed by OCA, I&E and OSBA, the Company's proposed allocation of wastewater revenues to water revenues is reasonable and should be approved. The Company's proposal is guided by the cost of service, but also takes into consideration the Commission's stated policy and goals in achieving consolidation of wastewater systems, as well as the concept of gradualism. Importantly, the alternatives proposed by OCA and I&E specifically would result in rate shock for the acquired systems for which this is their first rate case. The Commission should reject this alternative allocation proposals and

accept Aqua PA's proposal to allocate $20,839,425 of wastewater revenues to water customers under Section 1311(c) of the Public Utility Code, 66 Pa.C.S. § 1311(c).

The Company notes that no scale back of its proposed wastewater rates should occur until the total wastewater allocation is eliminated. AP St. 5-R at 25. Thus, any scale back of water rates will first reduce the Act 11 allocation.

3. Wastewater Revenue Allocation.

As previously explained, Aqua PA prepared separate cost of service studies for its wastewater operating divisions, as a requirement of the Commission's orders related to these acquisitions. AP St. 5 at 19. The cost of service studies performed by Aqua PA witness Ms. Heppenstall allocate total costs "to the residential and non-residential customer classifications in accordance with generally accepted cost of service principles and procedures." AP St. 5 at 19. The results of the allocations of the pro forma cost of service as of FPFTY are set forth in AP Exhibit 5-B, Part I.

Aqua PA witness Ms. Heppenstall further summarized the results of the proposed revenue allocation as follows:

> The results are summarized in columns 1, 2, 3 and 4 of Schedule A for each study in Exhibit 5-B, Part I. Column 2 of each schedule sets forth the total allocated pro forma cost of service for each customer classification identified in column 1. Column 3 presents the total Act 11 revenues for each division proposed to be transferred to the water cost of service study, in Exhibit No. 5-A, Part I – Schedule A. Column 4 shows the revised total allocated pro forma cost of service for each customer classification identified in column 1. Column 5 presents each customer classification's cost responsibility as a percent of the total cost. The cost of service by class in column 2 was developed in Schedule B of each study. The factors that allocate the functional costs to customer classes are presented in Schedule C of each study. The factors that allocate the cost of service to the cost functions are shown in Schedule E of each study.
>
> ***

> A comparison of the allocated cost responsibilities and the percentage revenue under existing rates can be made by comparing columns 5 and 7 of each Schedule WW-A in Exhibit 5-B, Part I. The revenues in column 8 are simply the revenues that would be required to move toward (or approximate) the cost of service in column 4, and the increase or decrease from present revenues is shown in column 10, with the percentage increase or decrease in column 11.

AP St. 5 at 20-21.

The Company's proposed revenue allocation results in movement of all wastewater customer classifications towards the cost of service. Aqua PA's proposed allocation of the revenue requirement among wastewater customer classifications in each of its divisions is reasonable and progresses each customer classification toward the average relative rate of return.

OSBA witness Mr. Kalcic recommended that the revenue from wastewater base operations (*i.e.*, Rate Zones 1-6) be increased by 24.8%. OSBA St. 1 at 15. Aqua PA has addressed this proposal, as it was driven by OSBA's desire to decrease the amount of the Act 11 allocation, in Section IX.B.2.c. *supra*. As such, Aqua PA will not restate this argument here.

4. Water Revenue Allocation.

The Company's proposed revenue allocation for water operations is presented in Schedule A of AP Exhibit 5-A, Part I. Ms. Heppenstall explained that:

> The results are summarized in columns 1, 2 and 3 of Schedule A in Exhibit No. 5-A, Part I. Column 2 sets forth the total allocated pro forma cost of service as of March 31, 2023, for each customer classification identified in column 1. Column 5 presents each customer classification's cost responsibility as a percent of the total cost.
>
> ***
>
> A comparison of the allocated cost responsibilities and the percentage revenue under existing rates can be made by comparing columns 5 and 7 of Schedule A of Exhibit 5-A, Part I. A similar comparison of the percentage cost responsibilities (relative cost of service) and the percentage of pro forma revenues (relative

> revenues) under proposed rates can be made by comparing columns 5 and 9 of Schedule A of Exhibit No. 5-A, Part I.

AP St. 5 at 9-10. The Company's calculation of the rate of return and relative rate of return for each class under present and proposed rates were initially set forth in AP Exhibit 5-A, Part I, Schedule B (present rates) and Schedule C (proposed rates). However, the Company provided updates to its revenue allocation for water service in AP Exhibit 5R-A, Part I, as a part of its rebuttal case.

The Company's proposed revenue allocation results in substantial movement of all water customer classifications toward the system average rate of return, as shown by the chart below.

Aqua PA's Proposed Relative Rate of Returns (Water)[77]

	Total	Residential	Commercial	Industrial	Public	Other Water Utilities	Fire (Private)	Fire (Public)
Total Revenue Increase as Proposed[78]	$86,485,199	$58,198,937	$19,090,526	$3,075,729	$1,362,174	$2,035	$2,841,074	$1,329,034
Percent Total Revenue Change[79]	17.0%	17.4%	16.0%	18.5%	16.0%	15.9%	17.6%	20.6%
Proposed Rate of Return[80]	7.64	7.35	8.00	7.63	9.02	112.65	9.70	7.64
Proposed Relative Rate of Return[81]	1.00	0.96	1.05	1.00	1.18	14.74	1.27	1.00
Current Rate of Return[82]	6.44	6.19	6.89	6.01	7.60	101.51	8.08	6.27
Current Relative Rate of Return[83]	1.00	0.96	1.07	0.93	1.18	15.77	1.25	0.97

As this table illustrates, Aqua PA's proposed allocation, inclusive of the wastewater allocation, of the revenue requirement among water customer classifications is reasonable and progresses each customer classification toward the system average relative rate of return.

[77] The rate of return and relative rate of return rates include the Company's proposed wastewater allocation.
[78] *See* AP Exhibit 5R-A, Part II, Schedule 1.
[79] *See* AP Exhibit 5R-A, Part II, Schedule 1.
[80] *See* AP Exhibit 5-A, Part II, Schedules B-C.
[81] *See* AP Exhibit 5-A, Part II, Schedules B-C.
[82] *See* AP Exhibit 5-A, Part II, Schedules B-C.
[83] *See* AP Exhibit 5-A, Part II, Schedules B-C.

OSBA recommended an alternative water revenue allocation, whereby the proposed revenues not related to the Act 11 allocation are isolated and compared to the cost of service not related to the Act 11 allocation. *See* OSBA St. 1 at 8-11. Based on this alternative allocation, OSBA asserts that Aqua PA's proposed revenue allocation fails to move all customer classes closer to their respective cost-based revenue levels. OSBA St. 1 at 9. As a result of this alternative allocation, Ms. Heppenstall explained that OSBA's:

> resulting allocation raises the proposed increase to the residential class from 17.4% to 19.4%, decreases the proposed increase for the commercial class from 16.0% to 12.3%, decreases the proposed increased for the public authority class from 15.9% to 4.3% and decreases the proposed increase for the private fire class from 17.5% to 2.0%.

AP St. 5-R at 5.

Although Aqua PA recognized that OSBA's methodology was a reasonable alternative to revenue allocation, Aqua PA demonstrated that the Company's allocation is more reasonable. AP St. 5-R at 5. Importantly, Aqua PA's proposed allocation of revenues views cost of service <u>as a whole</u>, and does not attempt to exclude the Act 11 allocation from its analysis. AP St. 5-R at 5. Rather, Aqua PA moves each customer classification toward its appropriate percentage cost of service including the Act 11 allocation. AP St. 5-R at 5. Aqua PA further provided a comparison of its proposed water revenue allocation, with OSBA's recommended revenue allocation in the chart below.

Customer Classification	Company Proposed Increase		OSBA Schedule Proposed Increase		Change in Increase
	Amount	Percent Increase	Amount	Percent Increase	
(1)	(10)	(11)	(12)	(13)	
Residential	$ 58,198,936	17.4%	$ 65,505,228	19.6%	$ 7,306,292
Commercial	19,090,526	16.0%	15,248,036	12.8%	(3,842,490)
Industrial	3,075,729	18.5%	3,082,333	18.5%	6,604
Public	1,362,174	16.0%	387,604	4.6%	(974,570)
Other Water Utilities	2,035	15.9%	-	0.0%	(2,035)
Private Fire Protection	2,822,599	17.5%	328,799	2.0%	(2,493,800)
Public Fire Protection	1,329,034	20.6%	1,329,034	20.6%	$ 0
Total Tariff Sales of Water	85,881,033	17.1%	85,881,034	17.1%	1

AP St. 5-R at 5. As can be seen in the chart, it appears that OSBA's recommendation to isolate and remove the Act 11 allocation from its analysis is motivated by a desire to decrease the revenue allocated to non-residential customer classifications, while increasing the revenue allocated to residential customer classes. However, from the perspective of customers, the effect of the increase includes both the water increase and the wastewater allocation. The Company's methodology better reflects the cost of service.

Aqua-LUG witness Mr. Baudino also recommended an alternative revenue allocation. Aqua-LUG St. 1 at 5; Exhibit RAB-2. Under Mr. Baudino's proposal, the proposed increased to the Commercial and Public classes were reduced from 16.0% to 13.88%, and the proposed increase to the Residential class moved from 17.4% to 18.26%. Aqua-LUG St. 1 at 5.

While Aqua PA witness Ms. Heppenstall indicated she had "no philosophical problem" with Mr. Baudino's recommendation to the movement toward the relative rate of return by class, the Company opposed his recommendation. AP St. 5-R at 25. As explained by Ms. Heppenstall, Aqua-LUG's recommendation is based on moving a portion of the industrial class increase to the residential class, due to a larger increase to blocks 5 and 6 of the consumption rates for the industrial class. AP St. 5-R at 25. This movement of revenue from the industrial class to the residential class would result in relative rates of return between 0.98 and 0.96 and, therefore,

should be rejected. AP St. 5-R at 25.

5. Conclusion Regarding Revenue Allocation.

Aqua PA has shown in this proceeding that its proposed allocation of a portion of the wastewater revenue requirement increase to water customers will produce just and reasonable rates. Accounting for the Act 11 allocation proposed by Aqua PA, the Company's allocation of revenues between all water customer classifications and all wastewater customer classifications is reasonable, and should be approved.

C. TARIFF STRUCTURE AND RATE DESIGN

1. Water Rate Design.

a. Summary Of The Company's Proposed Water Rate Design.

The Company presented its comparison of present and proposed water rate schedules in response to Standard Data Request OR3, Schedule 1. AP St. 5 at 10. Aqua PA witness Ms. Heppenstall identified and explained several factors to be considered in the design of rates as follows:

> In preparing a rate structure, one should consider the allocated costs of service, the impact of radical changes from the present rate structure, the understandability and ease of application of the rate structure, community and social influences, and the value of service, particularly competitive concerns. General guidelines should be developed with management to determine the extent to which each of these criteria is to be incorporated in the rate structure to be designed, inasmuch as the pricing of a commodity or service ultimately should be a function of management.

AP St. 5 at 11. Accounting for these factors, Ms. Heppenstall explained that the Company developed five guidelines for the design of water rates:

1. maintain separate rate divisions for those areas with year-round usage and those areas with seasonal usage;

2. maintain a low-use block for the residential class at 2,000 gallons per month in each division, and a sixth block for the industrial classification for usage over 10 million gallons per month;

3. continue movement of those areas with year-round usage toward the Main Division rates;

4. increase existing Main Division private fire service line rates 17.5% and private hydrant charges by 20.6%; and

5. increase the existing Public Fire Hydrant rate up to the 25% of cost of service level.[84]

AP St. 5 at 11. Aqua PA's proposed water rates comply with these guidelines. AP St. 5 at 11.

For the Main Division, Aqua PA established a 5/8-inch customer charge of $22.40 per month, which represents a 24.4% increase (or 16.9% over present rates including the DSIC). AP St. 5 at 12. Customer charges for all other meter sizes were increased by 24.4%. AP St. 5 at 12. Aqua PA also increased consumption charges for each customer classification to move class revenues toward cost of service and recover the total revenue requirement. AP St. 5 at 12.

With respect to the remaining non-seasonal water divisions, Aqua PA witness Ms. Heppenstall explained:

> The following non-seasonal divisions are proposed to merge to Main Division in this case:
>
> Zone 1 – CC Garden, Sand Springs, Mifflin Township, Mount Jewett, and Robin Hood rates will move fully to Rate Zone 1 rates. Beech Mountain and Bristol Township division rates will continue to move toward Zone 1 rates.
>
> Zone 2 – will move fully to rates in Rate Zone 1 by raising the meter charges for ¾-inch to 4-inch to the level of Rate Zone 1 rates. All other rates were previously equal to Zone 1 rates.
>
> Two other areas, Bunker Hill and Phoenixville, rates were increased to move toward Zone 1 rates. The Company capped the rate increases for these two areas to 48%.

[84] See 66 Pa. C.S.§ 1328. Furthermore, in rate divisions where the public fire hydrant rate was below $25.86 per month, the Company proposed an increase in order to achieve state-wide unified rates in two or more rate cases. AP St. 5 at 11.

AP St. 5 at 12.

With respect to seasonal customers, Rate Zone 3 will continue to be served under the merged seasonal rate design. AP St. 5 at 13. For these customers, the monthly customer charge is being increased to $32.40, but is offset with a lower first block consumption rate than the Main Division for the first 4,000 gallons. AP St. 5 at 13. At the 4,000 gallon average per month and greater consumption levels, seasonal rate structure bills are equalized with the Main Division. AP St. 5 at 12.

The Company further explained its use of competitive service riders to avoid the loss of very large customers from which the Company recovers a significant amount of its fixed costs, to the benefit of other rate classes. AP St. 5 at 13. These large industrial, public and other water utility customers are capable of developing alternative sources of water. AP St. 5 at 13. As such, many are served under "[t]he competitive service riders DIS (Demand-Based Industrial Service), DRS (Demand-Based Resale Service) and EGS (Electric Generation Service)." AP St. 5 at 13. These competitive riders enable the Company to retain customers who can develop water supplies at average costs that are less than the Company's tariff rates; in return for a beneficial negotiated rate, these customers enter a contract to purchase a minimum amount of water each month and maintain favorable load factors. AP St. 5 at 13. Aqua PA did not propose any changes to these competitive service riders.[85]

Regarding the public fire hydrant rate for the Main Division, the Company proposed to increase this rate to a level equal to 25% of the cost per hydrant or $31.15 per month. Aqua PA St. 5 at 13-14. In other divisions, where the existing rate per month is less than the current Main

[85] Aqua PA addresses issues raised regarding customers served under the competitive service riders in Sections IV.B.1-2. *supra*.

Division rate of $25.86, the Company capped the proposed increase at 40%. AP St. 5 at 14; *see also* Exhibit 5-A, Part II, Schedule 7B. Relatedly:

> The present Main Division base rates for private fire service lines customers were increased approximately 26%. The Private Hydrant rates are increased by 40% for those areas with rates lower than the Main Division. The Main Division Private Hydrant rates are increase by 18.8%. See Schedule 7A of Exhibit No. 5-A, Part II.

AP St. 5 at 14.

Finally, the Company summarized the development of rates for Industrial Standby Rates, and Resale and Electric Generation Standby Rates. AP St. 5 at 14; AP Exhibit 5-A, Schedule H. Each of these rates include service, demand and commodity rates. AP St. 5 at 14. With respect to the service charges, these rates "are the same as those set forth on the Schedule of Rates for the Main Division" proposed in this case. AP St. 5 at 14-15. Regarding the demand charge, the firm standby demand charge "includes fixed operating and capital costs" and the interruptible standby demand charge "includes fixed operating costs" in the base and extra capacity functions. AP St. 5 at 15. Similarly, the commodity charge for deliveries pursuant to firm standby "includes variable operating costs" and the commodity charge for deliveries pursuant to interruptible standby "includes variating operating costs and capital costs in the base and extra capacity functions." AP St. 5 at 15. Furthermore, the commodity charge for deliveries in excess of firm and interruptible standby demand is the rate for the first block of the Main Division. AP St. 5 at 15.

Aqua PA's proposed water rate design should be approved, as the rates are designed to produce just and reasonable rates. The specific recommendations raised by other parties with respect to the design of residential and non-residential charges for water are discussed below.

b. Other Parties' Recommendations Related To Water Residential Charges.

Witnesses for OCA and I&E challenged several aspects of the Company's proposed design of residential water charges. As explained below, unless specifically accepted, these parties' recommendations should be rejected.

OCA witness Mr. Watkins argued that the Company provided no support for its proposed increase to water residential customer charges. OCA St. 4 at 13. However, support for the Company's proposed increases to water and wastewater customer charges was included in response to Filing Requirement RS1j. AP St. 5-R at 8; *see also* Appendix A to AP Exhibits 5-A and 5-B (providing Filing Requirement RS1j). Furthermore, Mr. Watkins was provided the Company's calculations for its proposed customer charges, as a part of the live Excel spreadsheets for AP Exhibits 5-A and 5-B he received during the course of this proceeding. AP St. 5-R at 8. Therefore, OCA's suggestion that no support was provided for the calculation of the proposed customer charges is incorrect and should be rejected.

OCA further recommended that certain "overhead costs" or "indirect O&M expenses" and "indirect depreciation expenses" be excluded from the calculation of the residential water customer charge. OCA St. 4 at 14. He further recommended that the water residential customer charge for the Main Division and Rate Zone 3 not be changed. OCA St. 4 at 16. However, OCA witness Mr. Watkins accepted the Company's proposed customer charges for Bunker Hill and Phoenixville. OCA St. 4 at 16.

Ms. Heppenstall refuted OCA's recommendation with respect to the water residential customer charge and explained:

> In operation and maintenance, these items include an allocation of office buildings, labor and materials and supplies related to meters and services, contractor services, property rental and transportation. However, <u>these items are essential to maintaining</u>

> customer facilities. Meters and services cannot be repaired without labor, contractors, transportation to and from job sites, and materials and supplies. He also excludes bad debt expense as a direct customer cost, which is part of the customer accounting function and should be recovered in the customer charge. As to rate base and depreciation expense, Mr. Watkins excludes allocations of office buildings, furniture and equipment, transportation equipment, materials and supplies as "overhead". Personnel working on customer facilities and customer accounting require office buildings, office furniture and equipment, transportation equipment and materials and supplies to do their job. These items are necessary for the support of customer facilities and customer accounting and should be considered direct costs.

AP St. 5-R at 9 (emphasis added).

OCA witness Mr. Watkins' recommendation also runs afoul of prior Commission decisions on this issue. *PPL Electric 2012*, at p. 131; *see also Aqua 2004 Order*, at *97-98. In the *Aqua 2004 Order*, the Commission held:

> First, the ALJ correctly found that the cost of customer equipment, and also of meters and service line maintenance, is properly includable in a cost study. We find that the OTS' proposed limitation of costs to only services and meters is unreasonably narrow.
>
> Second, we find that it is reasonable and proper to include allocated portions of indirect costs, such as employee benefits, local taxes and other general and administrative costs, in a cost study. We caution that these are costs which may be considered for inclusion in the customer charge, but such claims are subject to scrutiny on a case-by-case basis.

Aqua 2004 Order, at *98 (emphasis added). The Commission subsequently affirmed this decision in *PPL Electric 2012* and held that "the ALJ correctly recommended that, consistent with *Aqua* [*2004*], other customer-related costs are properly includable in a customer charge cost analysis." *PPL Electric 2012*, at p. 131. Here, Aqua PA has demonstrated that the costs OCA seeks to exclude from the water residential customer charge are necessary and essential to providing service to customers and maintaining customer facilities.

In surrebuttal, OCA witness Watkins continued to challenge the Company's customer cost calculation and inferred that the Company was "fudging" its calculation. Ms. Heppenstall replied:

> As stated in my rebuttal testimony, the Company has followed the same methodology accepted in prior cases and approved in Docket No. R-00038805 and affirmed in Docket No. R-2012-2290597, in calculating the direct customer costs to be included in the customer change. In fact, Gannett Fleming Valuation and Rate Consultants staff performed the analysis in Docket No. R-00038805 that was accepted in the order from that case. The Company did not "fudge" these numbers. As I stated previously, it is reasonable and necessary to include in customer costs an allocation of certain items that allow the Company personnel to perform their jobs, such as computers, office space, equipment, and transportation.

AP St. 5-RJ at 2.

Therefore, OCA's proposed analysis of the water residential customer charge should be rejected and its recommendation that the water residential customer charges for the Main Division and Rate Zone 3 not be increased should be denied. Importantly, no other witnesses challenged the Company's proposed residential water customer charge. AP St. 5-R at 10. The Company's proposal is just and reasonable, and should be approved.

c. Other Parties' Recommendations Related To Water Non-Residential Charges.

Only Aqua-LUG raised any issues with respect to the Company's proposed water non-residential charges. Aqua-LUG witness Mr. Baudino testified that "Commercial and Industrial customer charges and the rates for consumption blocks 1 through 4 are the same for both classes," but noted "Industrial class rates also have 5th and 6th blocks that Commercial customers do not have." Aqua-LUG St. 1 at 5. He recommended that the Company keep charges for blocks 1-4 of the Commercial and Industrial Classes similar, while avoiding "excessive increases for blocks 5 and 6 of the Industrial class." Aqua-LUG St. 1 at 5-6. He

further recommended that Aqua PA could shift some of the revenue allocated to the Industrial class to the Residential class to moderate any increases, if necessary. Aqua-LUG St. 1 at 6.

For the same reasons explained above with respect to Mr. Baudino's proposal to shift the revenue allocated to the Industrial class to the Residential class if needed, *see* Section IX.B.3. *supra*, his proposal is not necessary and should be rejected.

2. Wastewater Rate Design.

a. Summary Of The Company's Proposed Wastewater Rate Design.

The Company presented its comparison of present and proposed wastewater rate schedules in response Schedule F-WW of AP Exhibit 5-B, Part I. *See also* AP St. 5 at 21. Aqua PA witness Ms. Heppenstall also identified and explained several guidelines developed during discussion with the Company for the design of wastewater rates:

1. move toward additional consolidation of rates across rate zones;
2. for metered areas, develop a rate structure that includes a customer charge or EDU charge and a single block usage charge;
3. for unmetered areas, develop a monthly flat rate to equal 4,000 gallons priced-out at the respective zone rates; and
4. where possible, eliminate an allowance.

AP St. 5 at 21-22. Aqua PA's proposed wastewater rates comply with these guidelines. AP St. 5 at 22.

Furthermore, as a part of its consideration of the design of wastewater rates, Aqua PA performed an analysis of the feasibility of implementing a summer wastewater cap, as required by the settlement of the 2018 Base Rate Case. *See* AP Exhibit 5-C. Ms. Heppenstall explained that:

> [Aqua PA] performed an analysis based on capping usage at winter water usage levels for the Wastewater Base Operations. This cap

> would have the affect[sic] of raising the rates for all wastewater customers significantly and benefiting high water users. Our analysis, attached as Exhibit 5-C, shows that, under the cap, billed usage would decline by 38% and the average monthly bill for a residential customer using 4,000 gallons per month would rise to $85.73, a 10.6% increase over the projected bill under proposed filed rates of $77.49. In addition, as the wastewater operations benefit from the shift under Act 11 from wastewater to the water operations, it is conceivable that as wastewater rates rise due to the implementation of the cap, more Act 11 shifting would be needed to mitigate this increase.

AP St. 5 at 21-22. Based on this analysis, the Company submitted that it was not appropriate to implement a summer wastewater cap for its wastewater customers. AP St. 5 at 22.

Aqua PA's proposed wastewater rate design should be approved, as the rates are designed to produce just and reasonable rates. The specific recommendations raised by other parties with respect to the design of residential and non-residential charges for wastewater are discussed below.

b. Other Parties Recommendations Related To Residential Wastewater Charges.

Witnesses for OCA and I&E challenged several aspects of the Company's proposed design of residential wastewater charges. As explained below, unless specifically accepted, these parties' recommendations should be rejected.

i. Wastewater Base.

As he did with respect to the Company's proposed increase to water customer charges, OCA witness Mr. Watkins argued that the Company provided no support for its proposed increase to wastewater residential customer charges. *See* OCA St. 4 at 17. This argument is incorrect and should be rejected for the reasons previously explained. *See also* AP St. 5-R at 10. Aqua PA witness Ms. Heppenstall also explained that OCA's customer cost analysis did not

include an allocation of costs related to I&I allocated to the customer cost function. AP St. 5-R at 10. As such, OCA's customer cost analysis is incomplete.

Moreover, Aqua PA demonstrated that the weighted average of all wastewater customer charges under proposed rates is *lower* than the customer charge that the Company can support based upon a customer cost analysis. AP St. 5-R at 10-11. Indeed, Ms. Heppenstall provided the table below as a part of her rebuttal testimony.

Rate Zone	Metered Bills	Customer Charge Revenue*	Average Customer Charge
RZ 1	$ 16,897	$ 660,669	$ 39.10
RZ1A	26,337	1,146,776	43.54
RZ1B	9,833	384,486	39.10
RZ2	11,663	492,629	42.24
RZ3	27,676	1,607,722	58.09
RZ4	8,085	626,580	77.50
RZ5	6,457	607,967	94.15
RZ5 - NG	588	54,957	93.45
RZ6	16,548	829,074	50.10
RZ7	82,876	3,271,931	39.48
RZ8	14,399	562,999	39.10
RZ9	202,241	5,705,208	28.21
RZ10	56,687	1,834,952	32.37
RZ11	25,392	1,361,551	53.62
Total	$ 505,680	$ 19,147,501	$ 37.86

* Under proposed rates.

AP St. 5-R at 11. Furthermore, Ms. Heppenstall explained that although Mr. Watkins proposed to maintain the existing customer charge of Rate Zone 1, he does not discuss the customer charges for Rate Zones 2 through 6. AP St. 5-R at 11. As such, "his rate analysis is incomplete." AP St. 5-R at 14.

I&E's proposed rate design changes regarding Wastewater Base operations were based upon its proposals to reduce the Act 11 wastewater revenue allocation from this Rate Zone to water customers. Aqua PA fully addressed these recommendations in Section IX.B.2.c. *supra*.

Therefore, I&E's proposed changes to the residential customer rates for Wastewater Base Operations do not comport with the principles of gradualism and should be rejected.

ii. Limerick.

OCA recommended that the residential wastewater customer charge for Limerick be increased to only $31.00, rather than the Company's proposed charge of $39.48. OCA St. 4 at 18. OCA supports the Company's proposal to eliminate the usage allowance for this Rate Zone. OCA St. 4 at 18.

OCA's proposed $31.00 customer charge should be rejected. This charge is substantially below the fixed costs the Company incurs to serve Limerick customers, as depicted in the chart above. *See also* AP St. 5-R at 11.

I&E's propose rate design changes regarding Limerick were based upon its proposals to reduce the Act 11 wastewater revenue allocation from this Rate Zone to water customers. Aqua PA fully addressed these recommendations in Section IX.B.2.c. *supra*, and did not contest Mr. Kubas' rate design for Limerick because it is "very similar to the Company's proposed increase." AP St. 5-R at 22.

iii. East Bradford.

OCA recommended that the Company maintain the current rate of $68.09 plus a flat usage charge for newly metered customers in East Bradford. OCA St. 4 at 18. Mr. Watkins asserted that these customers are billed on a flat rate and that "the Company proposes to move most of these customers to a usage-based rate." OCA St. 4 at 18. He therefore argued that a "higher customer charge of $83.42 plus a usage charge is unwarranted." OCA St. 4 at 18.

Aqua PA demonstrated that OCA's recommendation misunderstands the Company's proposal regarding East Bradford customers. As explained by Ms. Heppenstall, "[t]he Company is not requesting a customer charge of $83.42. This requested charge represents <u>the Company's</u>

requested unmetered charge." AP St. 5-R at 12 (emphasis added). With respect to East Bradford customers, the Company:

> is requesting a customer charge for both the single family and townhouse customers of $39.10, plus a usage charge of $1.108 per 100 gallons, and an unmetered charge, for the remaining unmetered customers (except Birmingham customers), of $83.42, which is clearly stated in the Company's wastewater tariff page 10.8. The Birmingham unmetered customers will continue to be billed at the rate of $68.09 per their existing contract.

AP St. 5-R at 12 (emphasis in original). Moreover, Aqua PA explained that OCA's proposal for newly metered customers to pay both their current unmetered rate plus a usage charge is unfair. AP St. 5-R at 12. For these reasons, OCA's recommendations regarding the East Bradford residential rate design should be rejected.

iv. Cheltenham.

OCA accepted the Company's proposal to maintain the current rate structure of an EDU-based fixed customer charge plus a flat usage rate for Cheltenham customers, and increase the customer charge to $28.21. OCA St. 1 at 19.

I&E's proposed rate design changes regarding Rate Zone 9 – Cheltenham operations were based upon its proposals to reduce the Act 11 wastewater revenue allocation from this Rate Zone to water customers. Aqua PA fully addressed these recommendations in Section IX.B.2.c. *supra*. I&E's proposed changes to the residential wastewater customer rates for Rate Zone 9 – Cheltenham Operations would increase usage charges by over 73%. I&E Exhibit 5, Schedule 7, p. 1. This is contrary to the principles of gradualism and should be rejected.

v. East Norriton.

OCA agreed with the Company's proposed rate structure for East Norriton, which removes the allowance of 1,333 gallons per month, and recommends a customer charge of $31.00, rather than the customer charge recommended by the Company of $32.37. *See* OCA St.

4 at 19. OCA's proposed $31.00 customer charge should be rejected. This charge is below the fixed costs the Company incurs to serve East Norriton customers, as depicted in the chart above. *See also* AP St. 5-R at 11.

I&E's proposed rate design changes regarding Rate Zone 10 – East Norriton operations were based upon its proposals to reduce the Act 11 wastewater revenue allocation from this Rate Zone to water customers. Aqua PA fully addressed these recommendations in Section IX.B.2.c. *supra*. I&E's proposed changes to the residential wastewater customer rates for Rate Zone 10 – East Norriton, which will increase customer charges and unmetered rates by over 60%, which is contrary to the principles of gradualism and should be rejected.

vi. New Garden.

OCA recommended that the usage allowance for New Garden be eliminated and that a customer charge of $37.64 be implemented, contrary to the Company's proposals. OCA St. 4 at 20. However, this recommendation fails to take into account the fact that "eliminating the allowance for customers who use just over the minimum" would result in rate shock. AP St. 5-R at 13. Aqua PA witness Ms. Heppenstall conducted a bill comparison analysis that demonstrates a customer using 2,000 gallons per month would experience a 90.66% increase (under OCA's proposal) rather than the 37.4% increase (under the Company's proposal). AP St. 5-R at 13. This analysis is reproduced below:

CONSUMPTION GALLONS	BILLS UNDER PRESENT RATES	BILLS UNDER PROPOSED RATES	INCREASE AMOUNT	INCREASE PERCENT
(1)	(2)	(3)	(4)	(5)
0	$ 37.64	$ 37.64	$ 0.00	0.01%
1,000	$ 37.64	$ 59.51	$ 21.88	58.13%
2,000	$ 42.69	$ 81.39	$ 38.70	90.66%
3,000	$ 57.86	$ 103.26	$ 45.40	78.47%
4,000	$ 73.03	$ 125.14	$ 52.11	71.35%
5,000	$ 88.20	$ 147.01	$ 58.81	66.68%

As such, OCA's proposal with respect to New Garden is unreasonable and should be denied.

I&E's proposed rate design changes regarding Rate Zone 11 – New Garden operations were based upon its proposals to reduce the Act 11 wastewater revenue allocation from this Rate Zone to water customers. Aqua PA addressed these recommendations in Section IX.B.2.c. *supra*. Aqua PA witness Ms. Heppenstall also prepared a bill comparison of I&E's proposed rate design versus the Company's proposed rate design for New Garden, which is replicated below:

CONSUMPTION GALLONS	BILLS UNDER PRESENT RATES	BILLS UNDER PROPOSED RATES	INCREASE AMOUNT	INCREASE PERCENT
(1)	(2)	(3)	(4)	(5)
0	$ 37.64	$ 63.00	$ 25.36	67.39%
1,000	$ 52.81	$ 79.25	$ 26.44	50.08%
2,000	$ 42.69	$ 95.50	$ 52.81	123.71%
3,000	$ 57.86	$ 111.75	$ 53.89	93.14%
4,000	$ 73.03	$ 128.00	$ 54.97	75.27%
5,000	$ 88.20	$ 144.25	$ 56.05	63.55%
6,000	$ 103.37	$ 170.25	$ 66.88	64.70%

AP St. 5-R at 24. Therefore, I&E's proposed changes to the wastewater residential customer rates for Rate Zone 11 – New Garden is contrary to the principles of gradualism and should be rejected.

vii. Metered and Unmetered Charges.

OCA recommended that Aqua PA be required to "study the reasonableness of its unmetered rates." OCA St. 4 at 20-21. OCA noted that under present rates, the Company's average monthly metered revenue per customer, for all customers, is different than the Company's current unmetered rate. OCA St. 4 at 20.

The Company, however, fully explained the basis for the difference between metered and unmetered rates. Aqua PA witness Ms. Heppenstall testified:

> The large difference in Limerick and East Norriton is based on the fact that these are new acquisitions with legacy rates. The Company will rectify this disparity when it sets the rates in this case. For the other rate zones, the unmetered rate is based on an assumed average usage of 4,000 gallons per month plus a customer charge. The average usage of 4,000 gallons is substantiated in the Company's prior rate case as the pre-COVID pandemic average residential usage was 4,068 per month for the residential class. For example, in Bridlewood, the calculation of the unmetered rate under present rates equals $31.00 plus the usage rate of .7600 per 100 gallons at 4000 gallons ($31.00 + .7600 X 40) or $61.40. This calculation of the unmetered rate based on average usage is standard in the industry and used by other regulated water and wastewater utilities in Pennsylvania. For example, Pennsylvania American Water Company's unmetered wastewater rate for Zone 1 for 2022 is $78.41 per month which was designed to equal the metered customer charge plus the usage rate multiplied by an average usage of 3,458 gallons.

AP St. 5-R at 14-15 (emphasis added). As such, there are valid reasons for the differences between metered and unmetered rates, and the Company has adequately explained them. Therefore, OCA's recommendation that the Company conduct a further study of the reasonableness of unmetered rates is unnecessary and should be rejected.

viii. Feasibility Of Capping Non-Seasonal Wastewater Rates.

OCA witness Mr. Watkins further testified in response to the result of the Company's analysis of capping non-seasonal wastewater rates. *See* OCA St. 4 at 22. He recommended that the Company further study (a) a capping mechanism with a winter usage multiplier greater than 100% and (b) the feasibility of implementing irrigation water meters on a customer-by-customer request basis. OCA St. 4 at 22.

Aqua PA demonstrated that no further study is necessary. Although analyzing wastewater usage caps using multipliers greater than 100% would be simple, the result would be similar to the Company's present analysis. AP St. 5-R at 15. Indeed, "a cap would create higher rates for all wastewater customers, benefiting high water users" and, furthermore, "as the

wastewater operations benefit from the shift under Act 11 from wastewater to the water operations, it is possible that as wastewater rates rise due to the implementation of the cap, more Act 11 shifting would be needed to mitigate the increase." AP St. 5-R at 15.

c. Other Parties Recommendations Related To Wastewater Non-Residential Charges.

Only I&E recommended changes to the Company's proposed wastewater rate design for non-residential customers. Specifically, I&E's proposed rate design changes regarding Rate Zone 8 – East Bradford operations were based upon its proposals to reduce the Act 11 wastewater revenue allocation from this Rate Zone to water customers. Aqua PA fully addressed these recommendations in Section IX.B.2.c. *supra*. I&E's proposed changes to the commercial wastewater customer rates for Rate Zone 8 – East Bradford would increase the average bill by over 84%. I&E Exhibit 5, Schedule 6, p. 5. This is contrary to the principles of gradualism and should be rejected.

3. Proposed Reconcilable Rider Mechanisms

As a part of the 2021 Base Rate Case, Aqua PA proposed to implement several reconcilable riders applicable to its water and/or wastewater operations. Each of these riders is designed to allow the Company to recover easily identifiable costs that are subject to change for reasons outside of the Company's control between base rate proceedings. Aqua PA identifies the legal principles applicable to each of these proposed riders, and then demonstrates that it has satisfied the requirements for approval of each rider under Section 1307(a) of the Public Utility Code, 66 Pa.C.S. § 1307(a), and applicable Pennsylvania appellate precedent.

a. Applicable Legal Principles.

Although Pennsylvania law recognizes the general prohibition against single-issue ratemaking, it is well-recognized that the general prohibition is inapplicable where Section

1307(a) of the Public Utility Code authorizes the Commission to "specifically allow an automatic adjustment of rates outside of the rate-making procedures" and provides for "procedures to determine the reasonableness of the charges outside of a base rate case." *Pa. Indus. Energy Coalition v. Pa. PUC*, 653 A.2d 1336, 1350 (Pa. Cmwlth 1995), *aff'd*, 670 A.2d 1152 (Pa. 1996) ("*PIEC*"). Under Section 1307(a) of the Public Utility Code:

> Any public utility… may establish a sliding scale of rates or such other method for the automatic adjustment of the rates of the public utility as shall provide a just and reasonable return on the rate base of such public utility, to be determined upon such equitable or reasonable basis as shall provide such fair return. A tariff showing the scale of rates under such arrangement shall first be filed with the commission, and such tariff, and each rate set out therein, approved by it. The commission may revoke its approval at any time and fix other rates for any such public utility if, after notice and hearing, the commission finds the existing rates unjust or unreasonable.

66 Pa.C.S. § 1307(a). Rates established under Section 1307(a) must also satisfy the automatic adjustment reporting requirements set forth in Section 1307(e), including the reconciliation and refund or recoupment of differences between actual revenues and costs. 66 Pa.C.S. § 1307(e).

Pennsylvania appellate courts have explained that Section 1307(a) of the Code also permits utilities to establish a reconcilable rider to recover costs, (1) where expressly authorized by the General Assembly, or (2) where an expense is easily identifiable and beyond the utility's control. *See Popowsky v. Pa. PUC*, 13 A.3d 583, 591 (Pa. Cmwlth. 2011) ("*Popowsky 2011*") (explicitly holding that "the PUC has authority under Section 1307(a) of the Code to allow NAWC to implement the [Purchased Water Adjustment Clause]."); *see also Popowsky v. Pa. PUC*, 869 A.2d 1144, 1160 (Pa. Cmwlth. 2005), *appeal denied*, 895 A.2d 552 (Pa. 2006) ("*Popowsky 2005*") (stating "a Section 1307(a) automatic rate adjustment is appropriate where expressly authorized…or for easily identifiable expenses that are beyond a utility's control."); *PIEC*, 653 A.2d at 1349 (holding in part that "Section 1307 gives the PUC the discretion to

establish by regulations or order in the manner in which automatic adjustment recover" and "the surcharge method is permitted"); *Masthope Rapids Property Owners Council v. Public Utility Commission*, 581 A.2d 994, 1000 (Pa. Cmwlth. 1990) ("*Masthope*") (explaining that "the very function of the typical automatic adjustment clause is to permit rapid recovery of a specific, identifiable expense item.").

Particularly material to the discussion below, in *Popowsky 2011* the Commonwealth Court of Pennsylvania upheld a Commission order authorizing Newtown Artesian Water Company (Newtown) to supplement its tariff for water service with an automatic adjustment mechanism to recover increases in purchased water expense, *i.e.*, a "purchased water adjustment clause" or "PWAC." *Popowsky 2011*, 13 A.3d at 484. The court explained that Newtown purchases a portion of its water from a water authority pursuant to a purchased water agreement and that the authority had increased its purchase water rate several times since the agreement's inception. *See id.* at 585. In order to avoid the delay between the date of the change in purchased water rates and the date Newtown would be able to reflect the increase in expense in its base rate, Newtown filed the PWAC "to recover, through a surcharge, the difference between the cost of purchased water reflected in NAWC's most recent general base rate case and any subsequent increases in…purchased water rate[s]." *Id.* The Commission authorized the implementation of the PWAC with certain safeguards. *Id.* at 586.[86]

---

[86] The Court explained that the safeguards included:

> (1) the [PWAC] implemented by [NAWC] shall not exceed three percent (3%) of the amount billed to customers, exclusive of the amounts recovered under the State Tax Adjustment Surcharge; (2) [NAWC] shall impute interest on any overcollections of the [PWAC] at the residential mortgage lending rate; and (3) [f]ollowing the resolution of a base rate proceeding, the PWAC will be reset to zero as the prudent purchased water expenses that had been collected in the PWAC are incorporated into base rates.

Id. (citations and quotations omitted).

On appeal the Commonwealth Court construed Section 1307(a) consistent with past precedent, and held that "the PUC has authority under Section 1307(a) to allow NAWC to implement to PWAC." *Id.* at 591. The court further explained that it "cannot ignore the fact that the General Assembly envisioned the automatic adjustment of rates in enacting Section 1307(a) of the Code" and "[t]hat the General Assembly did not expressly authorize the surcharge to recover increases in purchased water expense is not dispositive." *Id.* (emphasis added). Indeed:

> *Masthope*, *PIEC*, and *Popowsky 2005* support the proposition that surcharge recover is available under Section 1307(a) of the Code (1) where expressly authorized by the General Assembly, or (2) where an expense is easily identifiable and beyond the utility's control.

Id. (emphasis added). The court went on to further find that "increases in purchased water expense are easily identifiable" and that "the actual costs could be reconciled with the projected costs." *Id.* Moreover, the court found that the agreement at issue permitted the authority to "modify its rate at any future time, at its sole discretion and without notice." *Id.*

Each of the reconcilable riders proposed by Aqua PA in this proceeding is permitted under Section 1307(a) of the Public Utility Code, and the Company has demonstrated that each rider is necessary to recover an easily identifiable expense that can fluctuate between rates cases beyond the utility's control.

b. Purchased Water Adjustment Clause

As a part of its initial filing, the Company proposed to implement a Purchased Water Adjustment ("PWA") Clause in order to address both increases **and** decreases in the rates charged by non-affiliated suppliers from whom the Company purchases water. AP St. 4 at 2; *see also* Tariff Water No. 3, Original Pages 37-38. Importantly, the PWA Clause provides that:

> Whenever a non-affiliated supplier changes the rates it charges for water sold to the Company for resale to the Company's customers, the Company shall compute the change in its cost of purchased

> water. If the calculation shows an increase in the Company's cost of purchased water, relative to its Baseline Cost, the Company may file a tariff supplement setting forth a PWA charge to be included on customers' bills to recover such increase. If the calculation shows a decrease in the Company's cost of purchased water, relative to its Baseline Cost, the Company shall file a tariff supplement setting forth a PWA credit to reduce customers' bills for such decrease.

Tariff Water No. 3, Original Page 37 (emphasis added). The Company's proposed tariff further describes the clause's mechanics. *See* AP St. 4 at 2-4.

Aqua PA witness Mr. Christopher Henkel testified that the Commission had approved a PWAC for Newtown[87] and further explained that such a clause was found to be in the public interest because it "reduced regulatory lag, included a 3% cap on the surcharge billed to NAWC customers and contained an audit and reconciliation process to safeguard customers." AP St. 4 at 3. Notably, the same safeguards identified as being present in the Newtown PWAC, *see Popowsky 2011*, 13 A.3d at 586, were proposed by the Company. Tariff Water No. 3, Original Page 38.[88]

---

[87] *See generally Popowsky 2011*.

[88] The Company's PWA Clause sets forth the following four safeguards:

> Cap on PWA Charge: A PWA charge may not exceed 3% of the amount billed to customers under otherwise applicable rates and charges.
>
> Audits/Reconciliation: The PWA will be subject to audit at intervals determined by the Commission. It will also be subject to an annual reconciliation based on a reconciliation period consisting of the twelve months ending December 31 of each year. The revenue increase or decrease billed under a PWA charge will be compared to the Company's Eligible Increase or Eligible Decrease, which shall be prorated as appropriate if the PWA Charge or Credit was in effect for less than one year. The difference between the billed revenue increase or decrease and the Eligible Increase or Eligible Decrease (prorated as appropriate) will be recouped or refunded, as appropriate, in accordance with Section 1307(e) over a one-year period commending on April 1 of each year.
>
> New Base Rates: The PWA will be reset at zero as of the effective date of new base rates that reflect the Company's actual purchased water costs.
>
> Customer Notice: Customers shall be notified of a PWA charge or credit or changes in any existing PWA charge or credit by including appropriate

Mr. Henkel further explained that the Company purchases water from a number of suppliers to meet its customers' demands on a reliable and cost-effective basis. AP St. 4 at 4. Aqua PA's purchased water expense at present rates is $4,148,773, which represents approximately 3.6% of the Company's total water operations expenses. AP Exhibit 1-A, Schedule C-2, page 1 (identifying the purchased water expense at present rates and total operating expenses of $116,459,234). Many of these suppliers are municipalities or municipal authorities that can change rates quicker and more frequently than public utilities that are regulated by the Commission. AP St. 4 at 4. Even the rates for purchases from regulated utilities can increase prior to when rate cases are filed by Aqua PA.[89] As a result, Mr. Henkel explained:

> the Company's water suppliers frequently implement rate increases at times that do not coincide with base rate cases filed by the Company and well before the Company could reasonably expect to file a base rate case to reflect those increases in its rates. As a consequence, the Company experiences a lag between the time its suppliers increase their rates and when the Company can recover those increases in the rates it charges its customers. <u>The PWA would help to reduce this lag.</u>

AP St. 4 at 4 (emphasis added).

No parties contested the method of calculation, mechanics, or proposed safeguards set forth in the Company's PWA Clause. However, OCA, I&E and OSBA opposed the implementation of the proposed PWA Clause on several grounds. Aqua PA witness Mr. Henkel summarized these challenges as follows:

> The main arguments by these witnesses are: (1) that the PWA and ECA would violate the principle of "single issue ratemaking"; (2) that the PWA and ECA would be discriminatory because they

---

information on the first bill they receive following the implementation of, or change in, any PWA charge or credit.

[89] As explained in Section V.F. of this Brief, Aqua PA files base rate cases on a three-year cycle.

> would not apply to customers that receive service under negotiated contract rates established under AP's Competitive Rate Riders ("CRRs"); (3) that purchased water and energy costs are not volatile, unpredictable or significant; (4) that an adjustment clause removes incentives to control costs and achieve efficiencies; and (5) that automatic rate adjustments should not be used for costs that the utility has the ability to control.

AP St. 4-R at 1-2. In addition, OSBA witness Mr. Kalcic argued that the PWA was biased in favor of shareholders and would insulate Aqua PA's earnings. OSBA St. 1 at 22-25. Each of these arguments is without merit and should be denied.

With respect to the other parties' claims that the PWA Clause violates the general prohibition against single-issue ratemaking, the Commission and Pennsylvania appellate courts have clearly found that automatic adjustment clauses authorized by Section 1307(a) of the Public Utility Code do not constitute prohibited single-issue ratemaking. 66 Pa.C.S. § 1307(a); *see also Popowsky 2011*, *Popowsky 2005*, *Masthope*, and *PIEC*. Moreover, the Commonwealth Court in *Popowsky 2011* specifically addressed the implementation of a PWAC under Section 1307(a), and rejected OCA's arguments that a PWAC constitutes impermissible single-issue ratemaking. *Popowsky 2011*, 13 A.3d 593 ("Having found that the PUC has authority under Section 1307(a) of the Code to allow NAWC to implement the PWAC, we hold that the PWAC does not constitute impermissible single-issue ratemaking."). Aqua PA's proposed PWA Clause is the same type of mechanism that was upheld in *Popowsky 2011*, is filed for the same basis that was found to justify the mechanism in *Popowsky 2011*, and includes the same protections as the mechanism upheld in *Popowsky 2011*. Therefore, the arguments of OCA, I&E and OSBA that the proposed PWA Clause constitutes impermissible single-issue ratemaking are without merit and should be rejected.

Regarding the other parties' claims that the PWA Clause could be discriminatory because it would not apply to customers that receive service under negotiated contract rates established

under Aqua PA's Competitive Rate Riders ("CRRs"), Aqua PA witness Mr. Henkel rebutted this concern. Importantly, the Commission has previously approved the CRRs as both reasonable and non-discriminatory. AP St. 4-R at 4. He further explained:

> However, the exclusion of contract customers from the operation of the surcharges is not unduly discriminatory…CRR customers' contract prices would not change based on increases (or decreases) in the cost of purchased water or energy regardless of whether those changes are implemented through the PWA and ECA or through changes in base rates. The CRR contract rates are not "discriminatory" because, as the Commission has recognized, increasing CRR customers' rates above their competitive alternative results in a loss of sales that, ultimately, would increase the revenues to be recovered from all other customers.

AP St. 4-R at 4-5.

Pennsylvania law is also clear that "[m]ere variation in rates among classes of customers does not *per se* create an intolerable preference." *Building Owners and Managers Assoc. v. Pa. PUC*, 470 A.2d 1092 (Pa. Cmwlth. 1984). Moreover, different rates may be charged to customers that receive a different type, grade or class of service. *Carpenter v. Pa. PUC*, 15 A.2d 473 (Pa. Super. 1940). Here, Aqua PA has justified the basis for the different treatment as between CRR customers, and other classes of customers that would be subject to the PWA Clause: CRR contract prices will not change due to the PWA Clause in recognition of the fact that CRR customers' rates are different from other classes to avoid a loss of sales to CRR customers that would ultimately increase the rates for all other classes. In this regard, the PWA Clause does not provide an undue preference for CRR customers at the expense of other classes; rather, the non-applicability of the clause is consistent with the intent of the CRRs, which is to obtain and retain customers with competitive alternatives to the benefit of other classes.

Regarding the other parties' claims that purchased water costs are not volatile, unpredictable or significant, these assertions ignore the fact that these costs are easily

identifiable, and are beyond Aqua PA's control. Indeed, no party challenges the fact that the Company's purchased water costs are "easily identifiable," and no party asserts that the calculation of these costs is not a simply mathematical exercise under the proposed PWA Clause.

Aqua PA witness Mr. Henkel further explained that purchased water costs are analogous to state tax expense, which is permitted to be recovered by the state tax adjustment surcharge. *See* AP St. 4-R at 2. Moreover, as explained above, the Commission and the Commonwealth Court have already specifically concluded that purchased water costs are "easily identifiable" and are beyond the control of a utility where, as here, these costs are subject to change by other entities. *Popowsky 2011*, 13 A.3d at 591.

While I&E witness Mr. Sakaya attempts to distinguish the proposed PWA Clause from the PWAC upheld in *Popowsky 2011* by comparing the level of Newtown's purchase water expense relative to the Company's,[90] this is not the test set forth under Section 1307(a) or Pennsylvania appellate precedent. Rather, where an automatic adjustment clause is not specifically authorized by statute, a utility must show that the expense is easily identifiable and beyond the utility's control. *See* Section IX.C.3.a. *supra* (citing *Popowsky 2011*, *Popowsky 2005*, *Masthope*, and *PIEC*). Therefore, I&E's attempt to restate the standard for approval of an automatic adjustment clause should be rejected.

Turning to the assertion that the PWA Clause removes incentives to control costs and achieve efficiencies,[91] Aqua PA fully rebutted these claims. Importantly, the PWA Clause "would not deprive the Commission of its authority to assure that purchased water…costs are prudently incurred." AP St. 4-R at 3. The proposed clause, in fact, isolates this cost for review both at the time Aqua PA would file a tariff supplement revising the PWA Clause and in a

[90] I&E St. 3 at 18.
[91] *See* OCA St. 1 at 25; OSBA St. 1 at 25.

subsequent end-of-period reconciliation proceeding. AP St. 4-R at 3. In this regard, the Company's purchased water costs will be subjected to greater scrutiny, which increases the Company's incentive to minimize these costs if possible. AP St. 4-R at 3. Mr. Henkel further noted that, through the use of the Commission's quarterly earnings reports, other parties would have ample opportunity to contest any proposed change to the PWA Clause in the unlikely event it appeared Aqua PA was earning more than a reasonable return due to this cost category. AP St. 4-R at 3-4.

Furthermore, assertion that the PWA Clause removes incentives to control costs proceeds from a faulty assumption that the costs are controllable. The volume of water that the Company must purchase is substantially defined by its customers' use of water, which is outside the Company's control. In addition, the bulk of Aqua PA's water purchases are made from municipalities or municipal authorities not subject to regulation by the Commission. AP St. 4-R at 2. The entities can, therefore, change rates as they deem necessary resulting in substantial increases or decreases in costs for Aqua PA. AP St. 4-R at 2-3. Here, as in *Popowsky 2011*, Aqua PA's cost of water from these entities can change at frequent and irregular intervals between base rate proceedings. *Popowsky 2011*, 13 A.3d at 585. As such, the PWA Clause proposed by Aqua PA is necessary to avoid the delay between the date of the change in purchased water rates triggered by another entity's unilateral decision to change the rates the Company pays and the date the Company could reflect the changes in this expense category in its base rates.

Finally, OSBA witness Mr. Kalcic's argument that the PWA is biased in favor of shareholders and would insulate Aqua PA's earnings should be rejected.[92] The PWA Clause specifically allows Aqua PA to decrease the rate charged to ratepayers to reflect the actual

[92] *See* OSBA St. 1 at 25.

purchased water costs it incurs between base rate proceedings. AP St. 4 at 2; *see also* Tariff Water No. 3, Original Pages 37-38. In this regard, the PWA Clause is not biased at all; it reduces the lag between when Aqua PA would experience a shift in this cost category from what is included in base rates and when Aqua PA would establish new base rates. Moreover, the greater review of the Company's purchased water costs afforded by the PWA Clause, as well as the safeguards included in it, provide ample protection against OSBA's unsupported concerns regarding shareholder bias.

For these reasons, and the reasons more fully explained in Aqua PA's testimony and exhibits, the proposed PWA Clause should be approved without modification. The reconcilable rider will permit Aqua PA to reduce the lag associated with the recovery of an easily identifiable expense beyond its control, and is consistent with similar mechanisms approved by the Commission and upheld by Pennsylvania appellate courts.

c. Energy Cost Adjustment Mechanism

Aqua PA has also proposed to implement an Energy Cost Adjustment Mechanism ("ECAM") in order to address both increases **and** decreases in the rates charged by energy suppliers from whom the Company purchases natural gas and electricity. AP St. 4 at 5; *see also* Tariff Water- No. 3, Original Pages 35-36. Importantly, the ECAM provides that:

> At the time that the Company files its annual reconciliation, the application will include a reconciliation of the actual energy costs to the amount recovered in base rates per actual thousand gallons sold as established in the last rate case. Any increase <u>or decrease in these costs would be divided by the projected normalized volumes increased for growth to develop a volumetric surcharge/surcredit applied to metered customers in the following 12-month period</u>. In this way, the Company is protected from uncontrollable increases in costs <u>and the customers will receive the benefit of decreases if those costs are less than those included in rates</u>. At the end of a 12-month period, the amount refunded/collected via the mechanism would be compared to the actual costs to be refunded/collected and

> the difference would be added or subtracted to the difference to be recovered/refunded in the following period.

Tariff Water No. 3, Original Page 35 (emphasis added). The Company's proposed tariff further describes the clause's mechanics. AP St. 4 at 5-6.

Aqua PA witness Mr. Henkel further testified that the "mechanism ensures that the Company recovers the costs of energy used to provide water service to its customers and only those costs" and that "[c]ustomers also benefit from any and all of the Company's efforts to control costs." AP St. 4 at 5. Notably, the ECAM includes safeguards similar to the safeguards proposed with respect to the PWA Clause. Tariff Water No. 3, Original Page 36.[93]

Mr. Henkel further explained that the ECAM will not reduce Aqua PA's incentive to implement energy-savings practices and technologies, as the "incentive to reduce operating costs remains an important tenant of its regulatory compact with customers and regulators in the delivery of safe, adequate, and reliable utility service." AP St. 4 at 6. Aqua PA's purchased energy expense at present rates is $8,264,721, which represents approximately 7.1% of the Company's total water operations expenses. AP Exhibit 1-A, Schedule C-2, page 1 (identifying the purchased power expense at present rates and total operating expenses of $116,459,234).

---

[93] The Company's ECAM sets forth the following three safeguards:

> Audits/Reconciliation: The ECAM will be subject to audit at intervals determined by the Commission. It will also be subject to an annual reconciliation based on a reconciliation period consisting of the twelve months ended December 31, each year. The difference between the energy costs in base rates and the increase or decrease in energy costs in computation of the charged filed with the Commission (prorated as appropriate) will be recouped or refunded, as appropriate, in accordance with Section 1307(e) over a one-year period commending on April 1 of each year.
>
> New Base Rates: The ECAM will be reset at zero as of the effective date of new base rates that reflect the Company's actual energy costs.
>
> Customer Notice: Customers shall be notified of a ECAM charge or credit or changes in any existing ECAM charge or credit by including appropriate information on the first bill they receive following the implementation of, or change in, any ECAM charge or credit.

No parties contested the method of calculation, mechanics, or proposed safeguards set forth in the Company's ECAM. However, OCA, I&E and OSBA opposed the implementation of the proposed ECAM on several grounds, which were almost identical to the grounds for their challenges to the PWA Clause identified in Section IX.C.3.b., above. Each of these arguments against the implementation of the ECAM should be rejected.

The other parties' claims that the ECAM violates the general prohibition against single-issue ratemaking should be rejected for the same reasons Aqua PA identified regarding the PWA Clause. *See* Section IX.C.3.b. *supra*. The Commission and Pennsylvania appellate courts have clearly found that automatic adjustment clauses authorized by Section 1307(a) of the Public Utility Code do not constitute prohibited single-issue ratemaking. 66 Pa.C.S. § 1307(a); *see also Popowsky 2011*, *Popowsky 2005*, *Masthope*, and *PIEC*.

Similarly, the other parties' claims that the ECAM would be discriminatory because it would not apply to customers that receive service under negotiated contract rates established under Aqua PA's CRRs[94] should be rejected for the same reasons explained with regard to the PWA Clause above. *See* Section IX.C.3.b. *supra*.

Regarding the other parties' claims that the Company's energy costs are not volatile, unpredictable or significant,[95] these assertions ignore the fact that these costs are easily identifiable, and are beyond Aqua PA's control. Indeed, no party challenges the fact that the Company's energy costs are "easily identifiable," and no party asserts that the calculation of these costs is not a simply mathematical exercise under the proposed ECAM.

Aqua PA witness Mr. Henkel further explained that these costs are analogous to state tax expense, which is permitted to be recovered by the state tax adjustment surcharge. *See* AP St. 4-

---

[94] *See* I&E St. 3 at 23-24.
[95] I&E St. 3 at 22-23; OCA St. 1 at 24-25; OSBA St. 1 at 22.

R at 2. Moreover, Aqua PA identified the numerous entities from whom it purchases natural gas and electricity, certain of which are energy suppliers (*i.e.*, natural gas suppliers or "NGSs", and electric generation suppliers or "EGSs") whose rates are not subject to regulation by the Commission. Rather, similar to the purchased water contract at issue in *Popowsky 2011*, the rate paid by Aqua PA is set by contract and can change between rate cases.

Aqua PA also fully rebutted the parties' claims that the ECAM removes incentives to control costs and achieve efficiencies.[96] Importantly, the ECAM "would not deprive the Commission of its authority to assure that… energy costs are prudently incurred." AP St. 4-R at 3. The proposed clause, in fact, isolates the Company's energy costs for review both at the time Aqua PA would file a tariff supplement revising the ECAM and in a subsequent end-of-period reconciliation proceeding. AP St. 4-R at 3. In this regard, the Company's energy costs are subjected to greater scrutiny which increases the Company's incentive to attempt to minimize this cost. AP St. 4-R at 3. Mr. Henkel further noted that, through the use of the Commission's quarterly earnings reports, other parties would have ample opportunity to contest any proposed change to the ECAM in the unlikely event it appeared Aqua PA was earning more than a reasonable return due to this cost category. AP St. 4-R at 3-4.

Furthermore, Aqua PA has limitations in the ability to control its purchased energy costs, particularly those that are tied to other utility rate filings, should be rejected.

Finally, OSBA witness Mr. Kalcic's argument that the ECAM is biased in favor of shareholders and would insulate Aqua PA's earnings should be rejected.[97] Like the PWA Clause, the ECAM specifically allows Aqua PA to decrease the rate charged to ratepayers to reflect the actual purchased water costs it incurs between base rate proceedings. AP St. 4 at 5;

---

[96] I&E St. 3 at 22-23; OCA St. 1 at 25; OSBA St. 1 at 22.
[97] *See* OSBA St. 1 at 22.

see also Tariff Water No. 3, Original Pages 35-36. The reduction in lag between when Aqua PA would experience a shift in this cost category from what is included in base rates and when Aqua PA would establish new base rates is not biased; it simply ensures that the actual costs incurred by Aqua PA are timely reflected in rates. Furthermore, OSBA's suggestion that Aqua PA should have reflected a reduction in its requested ROE in exchange for the "lower business risk that the ECAM would provide" is without merit. OSBA St. 1 at 22.

For these reasons, and the reasons more fully explained in Aqua PA's testimony and exhibits, the proposed ECAM should be approved without modification. The reconcilable rider will permit Aqua PA to more timely reflect the actual costs of easily identifiable expense beyond its control, and is consistent with similar mechanisms approved by the Commission and upheld by Pennsylvania appellate courts.

d. Federal Income Tax Adjustment Surcharge

Aqua PA also proposed to implement an adjustment clause that will adjust its water and wastewater base rates for changes in federal corporate income tax rates, called the Federal Tax Adjustment Surcharge ("FTAS"). AP St. 8 at 14-15; *see also* Tariff Water No. 3, Original Page 29-31, and Tariff Sewer No. 3, Original Page 16-18. Company witness Ms. Christine Saball explained that the FTAS was proposed for several reasons, and highlighted the fact that "significant changes in the federal corporate income tax rate can drastically impact the Company's revenue requirement." AP St. 8 at 15. Citing recent experience with the Tax Cuts and Jobs Act of 2017 ("TJCA"), Ms. Saball explained that "any time delay in adjusting rates…can result in either significant refunds or retroactive collections after the effective date of the tax rate change." AP St. 8 at 15.

The Company's concerns regarding prospective changes in the federal corporate income tax rate are not speculative. Rather, the federal government has recently made several statements

regarding proposed increases in the corporate income tax rate from 21% to 28% to help pay for significant increases in government investment and spending. *See* AP St. 8 at 15; *see also* AP St. 8-R at 9. Moreover, regardless of if/when an increase to the federal corporate income tax rate will take effect, the purpose of the FTAS is to act as a temporary mechanism if/when an increase or decrease in federal corporate income tax rates occurs and results in existing base rates no longer being "just and reasonable." AP St. 8-R at 9.

Aqua PA further demonstrated that any change in the federal corporate income tax rate by the federal government would be significant: an increase in the rate from 21% to 28% would increase total income tax expense "from the as filed amount in Schedules F-2 of Exhibits 1-A through 1-G of $37.9M at 21%, to approximately $52.0M." AP St. 8 at 16.[98] This would equate to an increase in revenue requirement of approximately $14 million. AP St. 8 at 16.

The Company's proposed FTAS further establishes the formula necessary to calculate the impacts of a change in the federal corporate income tax in base rates. *See* Tariff Water No. 3, Original Page 29-31, and Tariff Sewer No. 3, Original Page 16-18. Ms. Saball further explained the calculation of the reduction of the flow back of excess deferred taxes that would result:

> When there is a change in the federal corporate income tax rate, the IRS normalization rules require that the Company remeasure the ADIT reserve as of the date of enactment which results in an excess deferred tax reserve (if the rate decreases) or a deficient deferred tax reserve (if the rate increases).[] After the passage of the TCJA, the Company recorded a regulatory liability to reflect the change in the excess deferred tax reserve for the tax rate increase that went into effect January 1, 2018. The amortization of this excess deferred tax reserve to return the amounts previously collected from customers that is no longer due to the IRS is reflected in the flow back of excess deferred taxes on lines 20 through 22 of Schedules F-2, Exhibits 1-A through 1-G. When there is subsequent change to the federal corporate income tax rate,

[98] Ms. Saball further explained that this estimated impact does not account for the requisite adjustment to the 2017 excess deferred taxes that are now being flowed- back to customer through the ARAM. Aqua PA St. 8 at 16.

> another remeasurement occurs and the amount of the deferred income tax reserve is once again adjusted to reflect the new tax rate.
>
> In the case of a federal tax rate increase from 21% to 28%, this would result in a reduction to the previous balance of the excess deferred tax reserve which then causes a reduction in the amount of the flow back excess deferred taxes as shown in Schedule F-2 of Exhibits 1-A through 1-G and increase the impact I estimated above at $14M.

AP St. 8 at 16-17.

Aqua PA further testified that the FTAS is analogous to the State Tax Adjustment Surcharge ("STAS") that the Company, and other major Pennsylvania utility companies, have had in place for many years. AP St. 8 at 18. Just as the STAS provides for adjustments to base rates for changes in state taxes (and more specifically for changes under the Pennsylvania Corporate Net Income Tax), so too does the FTAS provide for adjustments to base rates for changes in federal corporate income tax. AP St. 8 at 18.

No parties contested the method of calculation, mechanics, or proposed safeguards set forth in the Company's proposed FTAS. However, OCA and I&E opposed the implementation of the proposed FTAS on several grounds. I&E argued that the FTAS should be disallowed because: (a) it is uncertain if/when an increase in the federal corporate income tax will take effect, (b) the Commission's experience with the TCJA shows that adequate and timely guidance issued on a statewide basis will address any such change, and (c) the FTAS should not allow for adjustments via the mechanism for impacts associated with deferred federal income taxes. I&E St. 1 at 34-36. OCA similarly asserted it is uncertain if/when an increase in the federal corporate income tax will take effect and that any change in this tax rate should be addressed by the Commission on a generic basis. OCA St. 2 at 15-16.

The argument that the FTAS should be rejected because a potential change in the federal corporate income tax rate is uncertain should be rejected. If no change occurs, the FTAS has no impact upon customers. AP St. 8-R at 9. If/when a change does occur, the FTAS will act as a temporary mechanism if/when a change occurs between a utility's base rates and will more timely ensure that the impacts of the change are reflected in the utility's rates. AP St. 8-R at 9.

Moreover, the assertion that any change in federal corporate income tax rates should be addressed on a generic statewide basis disregards the circumstances of each utility that must be taken into consideration in individual cases by the Commission. AP St. 8-R at 9-10. OCA witness Ms. DeAngelo appears to concede this point with respect to the impacts of the TCJA, but fails to acknowledge that tax provisions need to be analyzed as they apply to an individual utility's circumstances. *See* OCA St. 2 at 15-16. Indeed, when the Commission addressed the decrease in the federal corporate income tax under the TCJA, it not only recognized that utilities that were currently in a base rate proceeding required different treatment from utilities that were currently not in a base rate proceeding,[99] but it also required each utility not in a base rate proceeding to individually calculate the impacts of the TCJA upon their rates, reflecting the unique circumstances of each utility, and subsequently issued individual orders for each utility to implement the appropriate surcharge mechanism to reflect these impacts.[100]

Aqua PA witness Ms. Saball further rebutted I&E's argument that the Commission can be expected to respond to any increase in the federal corporate income tax rate in a manner similar to its response to the TCJA. AP St. 8-R at 10. Importantly, Ms. Saball highlighted the fact that I&E provided no example where the Commission has so responded to <u>an increase</u> in the

---

[99] *See Tax Cuts and Jobs Act of 2017*, Docket No. M-2018-2641242 (Order entered May 17, 2018) ("*TCJA May 17 Order*"), at pp. 16-19 (discussing the requirements for utilities without pending base rate cases) and pp. 19-20 (discussing the requirements for utilities with pending base rate cases); *see also Tax Cuts and Jobs Act of 2017*, Docket No. M-2018-2641242 (Order entered March 15, 2018).

[100] *See, e.g.*, *TCJA May 17 Order*, at p. 17.

federal corporate income tax rate, which could be handled differently where an increase in tax rates would increase customers' rates. AP St. 8-R, at 10. Indeed, the Commission could take the position that such effects must be recovered prospectively in a base rate case, which would compel the Company to file a base rate case when it would not otherwise do so. AP St. 8-R at 10.

Finally, I&E's recommendation that the FTAS, if approved, should be revised to exclude the effects on deferred federal income taxes should also be rejected. Aqua PA demonstrated that protected excess deferred federal income taxes must be included in the FTAS calculation. AP St. 8-R at 10. AP witness Ms. Saball explained:

> Excess deferred taxes are taxes recorded at a tax rate higher than the current rate and are returned to customers in this proceeding over the remaining book life of the underlying assets. If the federal corporate tax rate increases, the excess deferred taxes automatically decrease, but the term for returning them does not change. The calculation of the change would be provided with the FTAS filing and subject to reconciliation and subsequent audit under the FTAS. <u>Continuing to amortize excess deferred taxes based on a revised and substantially reduced balance would be inappropriate and potentially violate federal tax requirements that require the return of deferred taxes using average rate assumption method.</u>

AP St. 8-R at 10-11 (emphasis added). In this regard, I&E's proposal is not only unreasonable, but also potentially violative of federal law. However, further changes, including the treatment of excess deferred taxes on unprotected items, can be addressed in the next base rate proceeding. AP St. 8-R at 11.

For these reasons, and the reasons more fully explained in Aqua PA's testimony and exhibits, the proposed FTAS should be approved. This reconcilable rider will permit Aqua PA to more timely reflect the actual costs changes in federal tax law that are clearly beyond its control, and is consistent with similar mechanisms used to reflect changes in state tax law.

e. Universal Service Rider

Aqua PA also proposed to implement an adjustment clause that will adjust its water and wastewater base rates to recover the costs of proposed customer assistance programs from residential customers, called the USR. AP St. 10 at 9-10; *see also* Tariff Water- No. 3, Original Page 32-34, and Tariff Sewer No. 3, Original Page 19-21. Company witness Ms. Rita F. Black explained that the proposed USR is similar to the rider in place at the Peoples Companies and other energy utilities throughout the state. AP St. 10 at 9. Similarly, Company witness Ms. Erin Feeney testified that the USR is modeled after the Commission approved CAP Riders already in place for other regulated utilities such as Pennsylvania American Water Company, Columbia Gas of Pennsylvania, Inc., and PECO Energy Company. AP St. 2 at 17-18.

Aqua PA explained that the costs of CAP discounts, CAP arrange forgiveness benefits, CAP administration by a third party and the proposed Conservation and Emergency Repair Program included in the proposed CAP, were proposed for recovery via the USR. AP St. 10 at 9. Furthermore, Ms. Feeney explained that:

> The USR would adjust customers' bills by adding a charge or credit to reflect increases or decreases, respectively, in the Company's "Baseline Cost." The Baseline Cost is the estimate to administer and provide benefits under the various program components in the proposed CAP. Costs and revenues under the USR will be reconciled each year, and an over or under collection, as applicable, will be included in the "E" factor of the charge.

AP St. 2 at 18; *see also* Tariff Water No. 3, Original Page 32-34, and Tariff Sewer No. 3, Original Page 19-21. In this regard, the costs proposed for inclusion in the Company's USR are easily identifiable, and adjustment of these costs is a simple mathematical exercise. Furthermore, "[t]he operation of the USR will be subject to audit by the Commission and will also be subject to an annual reconciliation process." AP St. 2 at 18; *see also* Tariff Water No. 3, Original Page 32-34, and Tariff Sewer No. 3, Original Page 19-21.

Moreover, the actual costs that the Company will incur under its CAP program are outside of its control. There is no limit on the number of customers who could participate in the CAP. AP St. 10-R at 12; *see also* AP Exhibit RFB-1-R (OCA witness Colton admitting no limitation on the number of customers who could participate was proposed). In this regard, the reconcilable nature of the proposed USR "ensure[s] ratepayers are only responsible for actual program costs which may be more or less than original projections." AP St. 10-R at 13. The ability to adjust and reconcile the costs associated with such programs via the USR "is particularly important when launching a new program that may not meet or could exceed enrollment expectations." AP St. 10-R at 13.

No parties contested the method of calculation or mechanics set forth in the Company's proposed USR. However, certain parties argued that the costs proposed to be recovered through the USR should be recovered instead through base rates. The Company addressed these arguments in Section VIII.A.4. *supra*, and demonstrated that costs of the proposed CAP should be recovered through the USR. As such, Aqua PA has presented unrebutted evidence that the USR is designed to recover easily identifiable costs that are beyond the Company's control and, therefore, the USR should be approved without modification.

D. SCALE BACK

As explained throughout this Brief, the Company's proposed rate increase is just and reasonable and, therefore, should be approved. However, to the extent the Commission approves a rate increase less than that proposed by the Company, the scale back should be applied proportionally based on the Company's proposed revenue allocation. *See* AP St. 5-R at 19-20. Moreover, no wastewater scale back should occur until the total wastewater Act 11 allocation is eliminated. AP St. 5-R at 24-25. However, any scale back after the Act 11 allocation is eliminated should be based on the Company's proposed rate increases. AP St. 5-R at 24-25.

I&E witness Mr. Cline recommended that the revenue requirements and scale back of the wastewater operations must be determined prior to the application of a scale back to the water operations. I&E St. 4 at 16. In addition, when the wastewater scale back is determined, he recommends that the Company's proposed increases by class are scaled back proportionally. I&E St. 4 at 19-20. The Company agreed with this recommendation. AP St. 5-R at 19-20.

OCA also advanced two alternative rate scale back alternatives: one based on rate of return, and one based on revenue requirement. *See* OCA St. 4 at 11-13. Under either alternative, it appears that OCA recommends a scale back to proposed wastewater rates <u>and</u> reducing the Act 11 allocation. *See* AP St. 5-R at 7. In other words, OCA recommends a scale back to wastewater rates, even if the water customers are still allocated an amount of Act 11 revenues. *See* AP St. 5-R at 7. The Company, however, recommends that, in a scale back, that the Act 11 allocation to water rates be reduced first and then proposed wastewater rates are reduced only if the Act 11 allocation is $0, as noted above.

Aqua PA has demonstrated that OCA's proposed revenue allocation should be rejected and, therefore, their proposed scale back should also be rejected. AP St. 5-R at 8. In addition, OCA appears to disregard the fact that Aqua PA is working to consolidate water rates for Rate Zones 1 and 2 (with the exception of Chalfont, Concord Park and Treasure Lake in Rate Zone 2). Any scale back should maintain this consolidation. AP St. 5-R at 8.

E. BILL IMPACTS

At the December 20, 2021 evidentiary hearing held in these matters, the ALJ directed the parties to prepare, and include as an appendix to their Main Brief, a Rate Impact analysis. The Interim Order on Briefs and Closing Record dated December 20, 2021, further memorialized this directive as follows:

> That each party shall include an appendix which sets forth a rate impact analysis for residential, commercial and industrial rate classes by rate zone for both water and wastewater, which shall include 1) proposed monthly customer charges and percentage of increase from existing rates; and 2) proposed impact on the average customer bill in dollars and percentage of increase.

Pursuant to the ALJ's directive in the December 20, 2021 Interim Order, Aqua PA has included the requested Rate Impact Analysis as Appendix E to this Brief and fully incorporates the information contained therein as a part of its presentation in this Brief.

F. SUMMARY REGARDING RATE STRUCTURE

The Company's proposed cost of service studies and revenue allocation are guided by the current rate of returns for each customer class and are consistent with the Commonwealth Court's directives in *Lloyd*. The result of the Company's revenue allocation is a just and reasonable rate design. For these and the above reasons, the Company's proposed rate structure is just and reasonable and should be adopted in this proceeding.

X. CONCLUSION

For all the foregoing reasons, Aqua Pennsylvania, Inc. and Aqua Pennsylvania Wastewater, Inc., respectfully request that Administrative Law Judge Mary D. Long and the Pennsylvania Public Utility Commission approve the rate increase and other proposals set forth in Tariff Water – Pa. P.U.C. No. 3 and Tariff Sewer – Pa. P.U.C. No. 3.

Respectfully submitted,

Michael W. Hassell, Esq. (ID # 34851)
Garrett P. Lent, Esq. (ID # 321566)
Post & Schell, P.C.
17 North Second Street, 12th Floor
Harrisburg, PA 17101
Phone: 717-731-1970
E-mail: mhassell@postschell.com
E-mail: glent@postschell.com

Kimberly A. Joyce, Esq. (ID # 86605)
Mary McFall Hopper, Esq. (ID # 60118)
Alexander R. Stahl, Esq. (ID # 317012)
762 W. Lancaster Ave
Bryn Mawr, PA 19010
Phone: 610-645-1077
Phone: 610-645-1170
Phone: 610-645-1130
E-mail: kajoyce@essential.co
E-mail: mmhopper@aquaamerica.com
E-mail: astahl@aquaamerica.com

Dated: January 11, 2021

Counsel for Aqua Pennsylvania, Inc., and Aqua Pennsylvania Wastewater, Inc.

APPENDIX A

APPENDIX A
LIST OF ABBREVIATIONS

A/R	accounts receivable
ADIT	accumulated deferred income taxes
AFUDC	Allowance for Funds Used During Construction
AP Aqua PA or Aqua	Aqua Pennsylvania, Inc. and Aqua Pennsylvania Wastewater, Inc.
Aqua-LUG	Aqua Large Users Group
AWWA	American Water Works Association
BCS	Bureau of Consumer Services
C&I	Commercial and Industrial
CAC	Customer Advance for Construction
CAP	Customer Assistance Program
CAPM	capital asset pricing model
CARES	Customer Assistance, Referral and Evaluation Services
CAUSE-PA	Coalition for Affordable Utility Services and Energy Efficiency in PA
COSS	Cost of Service Study
CE	Comparable Earnings Method
CEOP	Customer Education and Outreach Program
CIAC	Contribution in Aid of Construction
CIS	customer information system
CNG	compressed natural gas
CPI	Consumer Price Index
CRR	Competitive Rate Rider
CSR	customer service representative
CWC	Cash Working Capital
DCF	discounted cash flow
DOC	depreciated original cost
DRS	Demand Based Resale Service
DSIC	Distribution System Improvement Charge
ECAM	Energy Cost Adjustment Mechanism
EPA	United States Environmental Protection Agency
ERP	equity risk premium
FERC	Federal Energy Regulatory Commission
FMV	fair market value
FOMC	Federal Open Market Committee
FPFTY	fully projected future test year
FPL	federal poverty level
FSR	field service representative
FT	full time
FTAS	Federal Tax Adjustment Surcharge
FTY	future test year
FY	fiscal year
GDP	gross domestic product
GHG	Green House Gas
GNP	gross national product

HTY	historic test year
I&E	Bureau of Investigation and Enforcement
I&I	infiltration and inflow
IRS	Internal Revenue Service
IVR	Interactive Voice Response
LEP	Limited English proficient/proficiency
LIHEAP	Low Income Home Energy Assistance Program
LIHWAP	Low-Income Household Water Assistance Program
LIURP	Low Income Usage Reduction Program
Masthope	Masthope Mountain Community Association
MG	million gallons
NPDES	National Pollutant Discharge Elimination System
O&M	Operations and Maintenance
OCA	Office of Consumer Advocate
OSBA	Office of Small Business Advocate
PADEP	Pennsylvania Department of Environmental Protection
PAR	Payment Arrangement Requests
PA SRECs	Pennsylvania Solar Renewable Energy Certificates
PaWARN	Pennsylvania's Water/Wastewater Agency Response Network
PFAS	per and poly-fluoro alklyl substances
PIP	Percentage of Income Payment
ppt	parts per trillion
psi	pounds per square inch
psig	pounds per square inch gauge
PURTA	Pennsylvania Public Utility Realty Tax
PWA	purchased water adjustment
PWD	Philadelphia Water Department
PWSA	Pittsburgh Water and Sewer Authority
RCA	root cause analysis
RF	risk free
ROE	return on equity
ROR	rate of return
RP	Risk Premium Method
RRA	Regulatory Research Associates
RROR	relative rate of return
SERP	Supplemental Executive Retirement Plan
SCADA	Supervisory Control and Data Acquisition
STAS	State Tax Adjustment Surcharge
TCJA	Tax Cuts and Jobs Act of 2017
UFW	unaccounted for water
UPAA	utility plant acquisition adjustments
USAG	Universal Service Advisory Group
USECP	Universal Service Energy and Conservation Plan
USP	Universal Service Program
USR	Universal Service Rider
WACC	Weighted Average Cost of Capital

WWTP	Wastewater Treatment Plant
YTD	year to date

APPENDIX B

APPENDIX B
PROPOSED CONCLUSIONS OF LAW

Aqua Pennsylvania, Inc. and Aqua Pennsylvania Wastewater, Inc. (collectively, "Aqua PA," "AP," or the "Company") proposes the following conclusions of law:

1. Under Sections 315(a), 1301, and 1304 of the Public Utility Code, a public utility's rates must be just and reasonable and cannot result in undue rate discrimination. 66 Pa. C.S. §§ 315(a), 1301 and 1304.

2. Under Section 315(a) of the Public Utility Code, a public utility seeking a general rate increase has the burden of proof to establish the justness and reasonableness of every element of the rate increase request. 66 Pa. C.S. § 315(a).

3. "It is well-established that the evidence adduced by a utility to meet this [justness and reasonableness] burden must be substantial." *Lower Frederick Twp. v. Pa. PUC*, 409 A.2d 505, 507 (Pa. Cmwlth. 1980).

4. A public utility, in proving that its proposed rates are just and reasonable, does not have the burden to affirmatively defend claims made in its filing that no other party has questioned; "While it is axiomatic that a utility has the burden of proving the justness and reasonableness of its proposed rates, it cannot be called upon to account for every action absent prior notice that such action is to be challenged." *Allegheny Center Assocs. v. Pa. PUC*, 570 A.2d 149, 153 (Pa. Cmwlth. 1990).

5. Although the ultimate burden of proof does not shift from the utility seeking a rate increase, a party proposing an adjustment to a ratemaking claim of a utility bears the burden of presenting some evidence or analysis tending to demonstrate the reasonableness of the adjustment. *See, e.g., Pa. PUC v. PECO*, Docket No. R-891364, *et al.*, 1990 Pa. PUC LEXIS 155 (Order dated

May 16, 1990); *Pa. PUC v. Breezewood Telephone Company*, Docket No. R-901666, 1991 Pa. PUC LEXIS 45 (Order dated Jan. 31, 1991).

6. Tariff provisions previously approved by the Commission are deemed just and reasonable and, therefore, a party challenging a previously-approved tariff provision bears the burden to demonstrate that the Commission's prior approval is no longer justified. *See, e.g., Pa. PUC v. Philadelphia Gas Works*, Docket Nos. R-00061931, *et al.*, 2007 Pa. PUC LEXIS 45, at *165-68 (Order entered Sept. 28, 2007).

7. A party that raises an issue that is not included in a public utility's general rate case filing bears the burden of proof. *See Pa. PUC v. Metropolitan Edison Co.*, et al., Docket Nos. R-00061366, et al., 2007 Pa. PUC LEXIS 5 (Order entered Jan. 11, 2007).

8. Aqua PA has met its burden of proof with respect to the criteria set forth in Section 1327(a) of the Public Utility Code, 66 Pa.C.S. § 1327(a). Therefore, Aqua PA is entitled to the rebuttal presumption that the Phoenixville positive acquisition adjustment claimed in this case is reasonable and shall be include in Aqua PA's rate base.

9. Public utilities are entitled to recover all reasonable expenses incurred to provide service to customers. The relevant question in a base rate proceeding is whether the expense is reasonable and appropriate for the furnishing of service to customers. *Butler Township Water Co. v. Pa. PUC*, 473 A.2d 219, 221 (Pa. Cmwlth. 1984).

10. The Commission has consistently accepted general price adjustment factors applied to expenses not separately adjusted, where the utility has demonstrated the adjustments are adequately supported and relatively conservative. *See, e.g., Pa. PUC v. Philadelphia Suburban Water Company*, Docket Nos. R-00016750, 2002 Pa. PUC LEXIS 55, at *53-55 (Order entered July 8, 2002) (accepting Philadelphia Suburban's proposed general inflation adjustment, as

modified and revised, and explaining the Commission has "consistently accepted inflation adjustments where supported by historic data demonstrating that the utility has experienced cost increases that exceed the claimed inflation increases."); *Pa. PUC v. United Water Pennsylvania, Inc.*, Docket Nos. R-00973947, et al., 1998 Pa. PUC LEXIS 6, at *29-32 (Order entered Jan. 30, 1998); *Pa. PUC v. Columbia Gas of Pennsylvania, Inc.*, Docket Nos. R-891468, et al., 1990 Pa. PUC LEXIS 162, at *37-44 (Order dated Sept. 20, 1990); *Pa. PUC v. Pennsylvania-American Water Company*, Docket Nos. R-880916, et al., 1988 Pa. PUC LEXIS, at *53-56 (Order dated Oct. 21, 1998).

11. The Commission has reviewed and approved incentive compensation programs in numerous prior rate cases. *See e.g.*, *Pa. PUC v. PPL Electric Utilities Corp.*, Docket No. R-2012-2290597, 2012 Pa. PUC LEXIS 1757 ("*PPL Electric 2012*"); *Pa. PUC v. Aqua Pa., Inc.*, Docket No. R-00072711, 2008 Pa. PUC LEXIS 50 (Order dated July 17, 2008) ("*Aqua 2008*"); *Pa. PUC v. Duquesne Light Co.*, 63 Pa. PUC 337, 1987 Pa. PUC LEXIS 342 (Order dated March 10, 1987); *PUC v. PPL Gas Utilities Corporation*, R-00061398, at p. 40 (Order dated Feb. 9, 2007); *Pa. PUC v. Philadelphia Gas Works*, Docket No. R-2008-2073938, 2008 Pa. PUC LEXIS 32 (Order dated Dec. 19, 2008). This includes stock rewards. *Pa. PUC v. UGI Utilities, Inc. – Electric Division*, Docket No. R-2017-2640058 (Order entered October 25, 2018).

12. Although the normalization period for rate case expense recovery should take into consideration the history of prior filings, there are circumstances that require the consideration of future circumstances. *See Emporium Water Company*, Docket No. R-2014-2402324, at pp. 48-49 (Order Entered Jan. 18, 2015) (citing *Pa. Pub. Util. Comm'n, et al., v. PPL Elec. Utils. Corp.*, Docket Nos. R-2012-2290597, et al. (Order Entered Dec. 28, 2012)).

13. Aqua PA has met its burden of proof to demonstrate that its claimed expenses are reasonable and appropriate for the furnishing of water and wastewater service to its customers.

14. The standards to be used by the Commission in determining what return rate is fair are well-established, having been set forth by the United States Supreme Court in *Bluefield Waterworks and Imp. Co. v. P.S.C. of West Virginia*, 262 U.S. 679, 690 (1923), almost 100 years ago: Rates which are not sufficient to yield a reasonable return on the value of the property at the time it is being used to render service are unjust, unreasonable and confiscatory, and their enforcement deprives the public utility of its property in violation of the Fourteenth Amendment.

15. The rate of return should be reasonably sufficient to assure confidence in the financial soundness of the utility and should be adequate, under efficient and economical management, to maintain and support its credit and enable it to raise the money necessary for the proper discharge of its public duties. *Bluefield Waterworks and Imp. Co. v. P.S.C. of West Virginia*, 262 U.S. 679, 693 (1923). These principles have been adopted and applied by the appellate courts of Pennsylvania in numerous cases. *See, e.g.*, *Riverton Consolidated Water Co. v. Pa. PUC*, 140 A.2d 114 (Pa. Super. 1958); *City of Pittsburgh v. Pa. PUC*, 126 A.2d 777 (Pa. Super. 1956); *Lower Paxton Twp. v. Pa. PUC*, 317 A.2d 917 (Pa. Cmwlth. 1974).

16. "One of the elements always relevant to setting the rate under *Hope* is the return investors expect given the risk of the enterprise." *Duquesne Light Co. v. Barasch*, 488 U.S. 299, 109 S. Ct. 609, 102 L. Ed. 2d 646, 661 (1989).

17. The determination of a fair rate of return requires the review of many factors, including: (1) the earnings that are necessary to assure confidence in the financial integrity of the company and to provide a reasonable credit profile to permit access to capital markets on reasonable terms, and (2) the amount of the investment, the size and nature of the utility and its

business and financial risks, in comparison to other enterprises. *Pa. PUC v. Pennsylvania Gas and Water Co. - Water Division*, 233, 341 A.2d 239 (Pa. Cmwlth. 1975); *Lower Paxton Twp., supra*.

18. The Commission's findings regarding rate of return must be based upon substantial and competent evidence on the record before it, not upon speculation or hypothesis. *Ohio Bell Telephone Co. v. Pub. Util. Comm. of Ohio*, 301 U.S. 292 (1937); *United States Steel Corp. v. Pa. PUC*, 390 A.2d 849 (Pa. Cmwlth. 1978); *Octoraro Water Co. v. Pa. PUC*, 391 A.2d 1129 (Pa. Cmwlth. 1978).

19. The Commission has determined that a utility's actual capital structure is to be used, absent circumstances where the actual capital structure is atypical for the type of utility service being offered. *See Pa. PUC v. City of Lancaster – Water*, Docket Nos. R-00984567, et al., 1999 Pa. PUC LEXIS 39 at *17 (Order dated Sept. 22, 199); *Pa. PUC v. City of Bethlehem*, 84 Pa. P.U.C. 275, 304 (1995); *Carnegie National Gas Co. v. Pa. PUC*, 433 A.2d 938, 940 (Pa. Cmwlth. 1981).

20. In determining whether the claimed capital structure is atypical, the Commission has looked to see whether the capital structure used by the utility is outside the range of that employed by the barometer group of companies considered in the rate of return analysis. If a utility's capital structure is within a reasonable range of similar risk barometer group companies, the utility's capital structure should be used and not a hypothetical capital structure.

21. Aqua PA's capital structure is within the range of capital structures of the barometer group and is not atypical. Therefore, Aqua PA's actual capital structure is reasonable and should be approved without modification.

22. The Commission has included a leverage adjustment in numerous prior rate cases. *See, e.g.*, *Popowsky v. Pa. PUC*, 868 A.2d 606, 612-13 (Pa. Cmwlth. 2004); *Pa. PUC v. Pa. American Water Co.*, Docket No. R-0001639 (Order dated Jan. 10, 2012) (approving 60 basis point adjustment); *Pa. PUC v. PPL Gas Utilities Corp.*, Docket No. R-00061398 (Order dated Feb. 8, 2007) (approving 70 basis point adjustment); *Aqua 2004 Order*, at *85-87 (adopting 60 basis point adjustment); *Pa. PUC v. PPL Electric Utilities Corp.*, Docket No. R-00049255 (Order dated Dec. 6, 2004) (approving 45 basis point adjustment).

23. The Commonwealth Court has held that the decision of whether to adopt a leverage adjustment is within the Commission's discretion. *Popowsky v. Pa. PUC*, 868 A.2d 606, 612-13 (Pa. Cmwlth. 2004).

24. Aqua PA has met its burden of proof to demonstrate that its proposed leverage adjustment is reasonable.

25. The Commission has, where appropriate, included an incremental upward adjustment to the cost of common equity to reflect management effectiveness. *See, e.g.*, *UGI Electric*, at p. 119; *PPL Electric 2012*, at pp. 98-99; *Aqua 2008*, at *63; *Pa. PUC v. West Penn Power Co.*, Docket Nos. R-00942986, et al., 1994 Pa. PUC LEXIS 144, *147 (Order dated Dec. 29, 1994).

26. Aqua PA has submitted substantial evidence of its management effectiveness and, therefore, should be awarded an incremental upward adjustment to the cost of common equity.

27. Public utilities are authorized under the Code and the Commission's regulations to develop and implement a Universal Service Program. 66 Pa.C.S. §§ 1401-1418; *see also* 52 Pa. Code § 69.265.

28. Aqua PA's proposed Universal Service Program is reasonable and appropriate, and consistent with the Commission's Order entered Jan. 24, 2020, at Docket Nos. A-2018-3006061, A-2018-3006062 and A-2018-3006063 (Order entered Jan. 24, 2020).

29. The Commission has authority to require a utility to provide adequate, safe and reasonable service pursuant to Section 1501 of the Public Utility Code, the Commission does not have authority over the Pennsylvania Department of Environmental Protection's implementation of its regulations, including the Chapter 94 process and related building restrictions. *See Feingold v. Bell of Pennsylvania*, 383 A.2d 791, 794 (Pa. 1977) (the Commission is a creature of statute and has only those powers which are expressly conferred upon it by necessary implication); *Rovin, D.D.S. v. Pa. PUC*, 502 A.2d 785 (Pa. Cmwlth. 1986) (the Commission does not have jurisdiction over complaint involving quality of water rather than quality of service); *Country Place Waste Treatment Co., Inc. v. Pa. PUC*, 654 A.2d 72 (Pa. Cmwlth. 1995) (no Commission jurisdiction over air quality within PADEP's jurisdiction rather than the quality of the service or facilities provided, which is within the Commission's jurisdiction); *Polites v. Pa. PUC*, 928 A.2d 388 (Pa. Cmwlth. 2007) (no Commission jurisdiction over complaint regarding company's testing methods for backflow prevention devices).

30. The Commission has repeatedly recognized that the cost of service study is only a guide to designing rates and is only one factor, albeit an important one, to be considered in the rate setting process. See, e.g., *Pa. PUC v. Aqua Pa., Inc.*, Docket No. R-00072711, 2008 Pa. PUC LEXIS 50 (Order dated July 17, 2008); *Pa. PUC v. West Penn Power Co.*, Docket Nos. R-901609, et al., 1990 Pa. PUC LEXIS 142, 73 Pa. PUC 454, 119 P.U.R.4th 110 (Order dated Dec. 13, 1990); *Pa. PUC v. Pennsylvania Power & Light Co.*, 55 PUR 4th 185, 249 (Order dated Aug. 19, 1983). Cost allocation studies require a considerable amount of judgment and are described as more of an

accounting/engineering art rather than science. *Application of Metropolitan Edison Co.*, R-00974008 (Order dated June 30, 1998); *Pa. PUC v. Pennsylvania Power & Light Co.*, 55 PUR 4th 185 (Order dated Aug. 19, 1983).

31. Aqua PA's cost of service studies are based upon sound, industry-approved methodologies and reflect reasoned judgment. Therefore, the cost of service studies are reasonable and should be approved.

32. A proposed revenue allocation will be found to be reasonable where it moves distribution rates for each class closer to the full cost of providing service. *Pa. Publ. Util. Comm'n, et al. v. PPL Electric Utilities Corporation*, Docket Nos. R-00049255, et al., 2007 Pa. PUC LEXIS 55 (Order on Remand entered July 25, 2007).

33. It is well settled that the establishment of a rate structure is an administrative function peculiarly within the expertise of the Commission. *Pittsburgh v. Pa. PUC*, 78 A.2d 35 (Pa. Super. 1951).

34. Courts have continually recognized that the findings of the Commission, if supported by competent evidence, will not be disturbed. *United States Steel Corp. v. Pa. PUC*, 390 A.2d 865 (Pa. Cmwlth. 1978); *Philadelphia Suburban Transportation Co. v. Pa. PUC*, 281 A.2d 179, 185 (Pa. Cmwlth.1971).

35. It is in the public interest for larger and more stable utilities to acquire small wastewater systems. *Policy Statement Re: Incentives for the Acquisition and Merger of Small, Nonviable Water and Waste Water Systems*, Docket No. M-00950686, (Order entered February 23, 1996).

36. Under Section 1311(c) of the Public Utility Code, "[t]he commission, when setting base rates, after notice and an opportunity to be heard, may allocate a portion of the wastewater

revenue requirement to the combined water and wastewater customer base if in the public interest." 66 Pa.C.S. § 1311(c). *See, e.g., Pa. PUC, et al. v. Aqua Pennsylvania, Inc.*, Docket Nos. R-2018-3003558, R-2018-3003561, et al., 2019 Pa. PUC LEXIS 170 (Order entered May 9, 2019); *Pa. PUC v. Pennsylvania-American Water Company*, Docket No. R-2017-2595853 (Order entered December 7, 2017); *Pa. PUC v. Pennsylvania-American Water Company*, Docket No. R-2013-2355276 (Order entered December 19, 2013); *Pa. PUC, et al. v. The York Water Company*, Docket Nos. R-2012-2336379, et al., 2012 Pa. PUC LEXIS 1881 (Recommended Decision dated Dec. 6, 2013), *adopted without modification* (Order entered Jan. 9, 2014).

37. Spreading costs across a larger rate and revenue base is in the public interest because it ameliorates the impact of major capital additions needed from time to time in every service area, promotes flexibility in timing and financing major capital additions, and mitigates instability. *Policy Statement Re: Incentives for the Acquisition and Merger of Small, Nonviable Water and Waste Water Systems*, Docket No. M-00950686, (Order entered February 23, 1996) *citing Pa. PUC v. Western Pennsylvania Water Co.*, 72 PUR 4th 103 (1986).

38. Aqua PA has met its burden of proof to demonstrate that its proposed allocation of a portion of the revenue requirement attributable to its wastewater operations to its combined water and wastewater customer base is in the public interest, and reasonable.

39. Aqua PA has demonstrated that its proposed revenue allocation moves its water and wastewater classes closer to the full cost of service and reflect reasoned judgment in the determination of the amount of revenue to be allocated to each class.

40. Pennsylvania law is clear that "[m]ere variation in rates among classes of customers does not *per se* create an intolerable preference." *Building Owners and Managers Assoc. v. Pa. PUC*, 470 A.2d 1092 (Pa. Cmwlth. 1984).

41. Different rates may be charged to customers that receive a different type, grade or class of service. *Carpenter v. Pa. PUC*, 15 A.2d 473 (Pa. Super. 1940).

42. Aqua PA's proposed water and wastewater rate structure, respectively reflected in Tariff Water – Pa. P.U.C. No. 3 and Tariff Sewer – Pa. P.U.C. No. 3, are just and reasonable.

43. Although Pennsylvania law recognizes the general prohibition against single-issue ratemaking, it is well-recognized that the general prohibition is inapplicable where Section 1307(a) of the Public Utility Code authorizes the Commission to "specifically allow an automatic adjustment of rates outside of the rate-making procedures" and provides for "procedures to determine the reasonableness of the charges outside of a base rate case." *Pa. Indus. Energy Coalition v. Pa. PUC*, 653 A.2d 1336, 1350 (Pa. Cmwlth 1995), *aff'd*, 670 A.2d 1152 (Pa. 1996).

44. Rates established under Section 1307(a) must also satisfy the automatic adjustment reporting requirements set forth in Section 1307(e), including the reconciliation and refund or recoupment of differences between actual revenues and costs. 66 Pa.C.S. § 1307(e).

45. Section 1307(a) of the Code permits utilities to establish a reconcilable rider to recover costs, (1) where expressly authorized by the General Assembly, or (2) where an expense is easily identifiable and beyond the utility's control. *See Popowsky v. Pa. PUC*, 13 A.3d 583, 591 (Pa. Cmwlth. 2011) (explicitly holding that "the PUC has authority under Section 1307(a) of the Code to allow Newtown Artesian Water Company to implement a [Purchased Water Adjustment Clause]."); *see also Popowsky v. Pa. PUC*, 869 A.2d 1144, 1160 (Pa. Cmwlth. 2005), *appeal denied*, 895 A.2d 552 (Pa. 2006) (stating "a Section 1307(a) automatic rate adjustment is appropriate where expressly authorized…or for easily identifiable expenses that are beyond a utility's control."); *PIEC*, 653 A.2d at 1349 (holding in part that "Section 1307 gives the PUC the discretion to establish by regulations or order in the manner in which automatic adjustment

recover" and "the surcharge method is permitted"); *Masthope Rapids Property Owners Council v. Public Utility Commission*, 581 A.2d 994, 1000 (Pa. Cmwlth. 1990) (explaining that "the very function of the typical automatic adjustment clause is to permit rapid recovery of a specific, identifiable expense item.").

46. Aqua PA has demonstrated that its proposed Purchased Water Adjustment Clause, Energy Cost Adjustment Mechanism, Federal Tax Adjustment Surcharge, and Universal Service Rider satisfy the requirements of Section 1307(a) of the Public Utility Code, 66 Pa.C.S. § 1307(a), are just and reasonable, and should be approved.

47. Aqua PA has carried its burden of proof to demonstrate that its proposed rate increase and the other proposals set forth in Tariff Water – Pa. P.U.C. No. 3 and Tariff Sewer – Pa. P.U.C. No. 3 should be approved without modification.

APPENDIX C

APPENDIX C
PROPOSED ORDERING PARAGRAPHS

Aqua Pennsylvania, Inc., and Aqua Pennsylvania Wastewater, Inc. ("Aqua," "AP," or the "Company") proposes the following ordering paragraphs:

1. The rate increase and other proposals set forth in Original Tariff Water – PA P.U.C. No. 3 and Original Tariff Sewer – PA P.U.C. No. 3 to become effective for service rendered on or after October 19, 2021, are approved.

2. Aqua PA is authorized and directed to file tariffs, tariff supplements and/or tariff revisions, on at least one day's notice, and pursuant to the provisions of 52 Pa. Code §§ 53.1, et seq., and 53.101, designed to produce an annual water rate revenue increase of approximately $86.118 million, to become effective for service rendered on and after May 19, 2022.

3. Aqua PA is authorized and directed to file tariffs, tariff supplements and/or tariff revisions, on at least one day's notice, and pursuant to the provisions of 52 Pa. Code §§ 53.1, et seq., and 53.101, designed to produce an annual wastewater rate revenue increase of approximately $11.566 million, to become effective for service rendered on and after May 19, 2022.

4. Aqua PA is authorized and directed to implement its proposed Universal Service Program, as set forth in the testimony of Rita F. Black.

5. The Complaint filed by the Office of Consumer Advocate is dismissed.

6. The Complaint filed by the Office of Small Business Advocate is dismissed.

7. The Complaint of Aqua Large Users Group is dismissed.

8. The Complaint of Masthope Mountain Community Association is dismissed.

9. The Complaint of East Norriton Township is dismissed.

10. The above-captioned respective Complaints of Martha Bronson, Neil Kugelman, Jennifer Buckley, Geoffrey Rhine, Theodore J. Voltolina, III, Aaron Nathaniel Brown/Botanica

Cottages Apartment Homes, Dale Markowitz, Dale Markowitz (WW), Darren Distasio, Deena Denesowicz, Vivian George, Carl Martinson, Kenneth Roth, Nick Panaccio, Richard Regnier, Elizabeth O'Neill, Erik and Ilesha Smith, Curtis and Michele Tabor, Gregory Valerio, Jerome Perch, Michael Brull, Gerald DiNunzio, Jr., James Blessing, Nancy Reedman, Elizabeth Yost, Michael McCall, Stephanie B. Boris, Keith D. Anthony, Carolyn Sica, Raymond Cavalieri, Byron Goldtean, Timothy Nicholl, Timothy Nicholl, Joan Lipski, David Ross, Ronald and Alexis Koenig, Alyssa Reinhart, Alyssa Reinhart, James Kolb, James Kolb, Ronald Schneck, James and Elaine Graziano, Ronald Schneck (WW), Matthew Cicalese, Dorothy Shearer, Matthew Cicalese, David Monroe, Ronald and Lora Roebuck, Ronald and Lora Roebuck, Stephen and Teresa Mason, Dean R. Swink, William F. and Ana Loftus, Sheila Gutzait, Francine Weiner, Kelly Frich, John F. Grassie, Kelly Frich, Rudy and Brandi Hofbauer, Adam Anders, Kyle Brophy, John Day, Daniel Savino, William and Charleen Falsone, Anthony Giovannone, Anthony Giovannone, Robert Dolan, Lisa Rampone, Stephen Timothy Grugeon, Lynne Germscheid, Lynne Germscheid, Deborah and James Popson, Deborah and James Popson, Michael Roberts, Edward Coccia, Stephen Timothy Grugeon, Tom Woodward, Camp Stead Property Owners Association, Montgomery Co, PA, Treasure Lake Property Owners Association, Treasure Lake Property Owners Association, Kevin Amerman, James A. Wharton Jr., Gerardo Giannattasio, Peter & Kim Ginopolas, Yefim Schnayder, Judy Burton, Judy Burton, Erik McElwain, Andrea and Matthew Rivera, Brian Edwards, Brian Edwards, Joseph R. Torello, Elizabeth Rasmussen, Richard J. Gage, James and Joanne Smyth, Donald Osinski, Joanne Smyth, Linda and James Hunsicker, 29 Estates LLC, Lake Associates LLC, David and Mercedes Bowers, Jane O'Donovan, and Raymond Martin are dismissed.

11. That, upon acceptance and approval by the Commission of the tariff supplements filed by Aqua PA, the investigation at Docket Nos. R-2021-3027385 and R-2021-3027386, and the above-captioned complaint dockets be marked closed.

APPENDIX D

Exhibit TMD-4-R

Witness: Todd Duerr
Date: 11/1/2021

AQUA PENNSYLVANIA, INC.
AQUA PENNSYLVANIA WASTEWATER, INC.

RESPONSE REQUEST
COMMISSIONER RALPH V. YANORA
PENNSYLVANIA PUBLIC UTILITY COMMISSION

DOCKET NOS. R-2021-3027385 & R-2021-3027386

---

1) The estimated number of company-owned lead service lines and the number of customer-owned lead service lines in the Aqua water distribution system;

RESPONSE:

On September 3, 2020, Aqua PA filed a petition for approval of tariff changes authorizing the replacement of customer-owned lead service lines. The Commission approved Aqua PA's request as modified under the Joint Petition for Settlement on July 15, 2021. Since the Company received approval, it has reached out to customers with known lead service lines and is in the process of getting agreements in place with customers to allow replacement of their lead service line under Aqua PA's program.

As of September 2021, Aqua PA currently has 7 known company side lead service lines and identified 325 customer owned lead service lines in its system based on the review of tap cards, water sampling data, meter exchange, and service call information. The Company's estimate is that there are over 100 company side lead service lines and over 2,000 customer-owned lead service lines.

Witness: Todd Duerr
Date: 11/1/2021

AQUA PENNSYLVANIA, INC.
AQUA PENNSYLVANIA WASTEWATER, INC.

RESPONSE REQUEST
COMMISSIONER RALPH V. YANORA
PENNSYLVANIA PUBLIC UTILITY COMMISSION

DOCKET NOS. R-2021-3027385 & R-2021-3027386

---

2) Compliance of the Aqua tariff cross-connection control requirements with 25 Pa. Code §§ 109.709, 109.608 and any applicable provisions of the International Plumbing Code;

RESPONSE:

Aqua PA has an established cross-connection control program, and has operated under its Cross-Connection Control Manual, attached to this response as Yanora-2 Attachment 1. As of July 2021, 77% of known backflow devices in Aqua PA's service areas were tested in accordance with the codes noted above, and 88% of services thought to have hazards are protected.

All new customers of the Aqua PA systems are required to install backflow devices as identified in the standards and specification outlined in our Cross-Connection Control Manual which meet the requirements in the codes noted above.

AQUA Pennsylvania Cross Connection Control Policy 2021

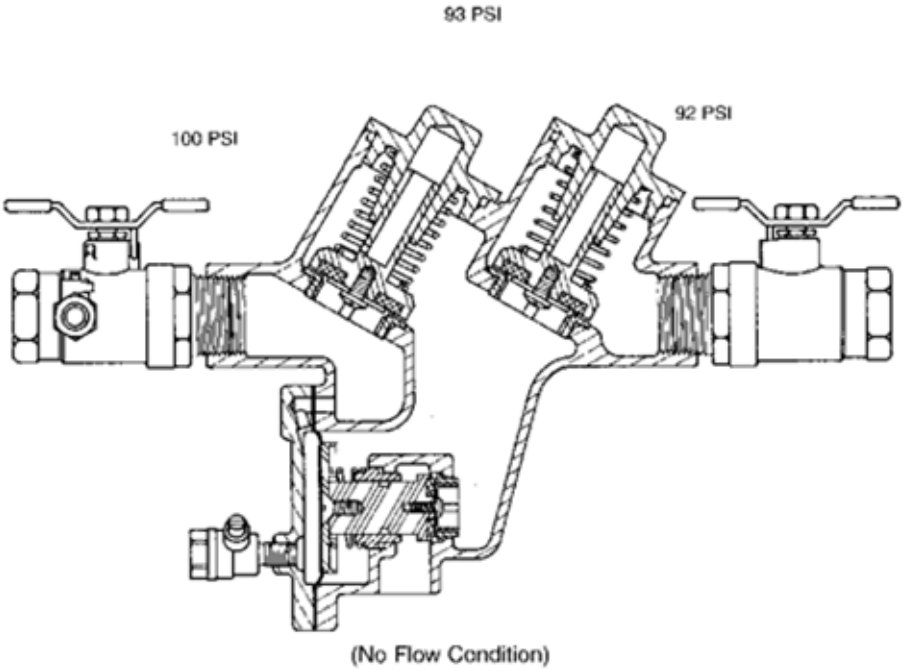

AQUA SM

An Essential Utilities Company

FORWARD

In accordance with the Federal Safe Drinking Water Act, the Pennsylvania Safe Drinking Water Act, the requirements of the Pennsylvania Department of Environmental Resources and the Rules and Regulations of Aqua Pennsylvania, Inc. ("AQUA") that have been approved by the Pennsylvania Public Utility Commission ("PUC"), AQUA has established a policy for the protection of the public potable water supply system through "BACKFLOW PREVENTION BY CONTAINMENT." The procedures for compliance with the policy are contained within this manual.

The Policy and Procedures, as outlined herein, along with other applicable codes, rules, and regulations are designed to provide reasonable protection to AQUA's potable water supply system against contamination and/or pollution resulting in backflow through uncontrolled plumbing connections and/or Cross Connections at commercial, industrial and residential customer premises.

AQUA first implemented an active plan for Cross Connection control in 1977, as evidence by the publication of its first manual on Cross Connection control. The manual's content provided the regulatory agencies, various municipalities, and customers with an introductory look at needed procedures which have evolved into the policies and procedures which were incorporated in AQUA's Cross Connection Control Prevention by Containment Program.

This policy is designed to provide the regulator, customer, public health personnel, plumbing inspectors, installers, building managers, maintenance personnel and other with information pertaining to Cross Connection control, as well as the customer's respective responsibility toward protection of the public water supply. The manual incorporates AQUA's policies, rule and regulations for implementation and enforcement through the adoption of standard practices and procedures which are recognized by AQUA and the Cross-Connection control industry, and are in compliance with laws and regulations, as well as sound water works practice.

INTRODUCTION

AQUA Pennsylvania, Inc. has been providing its customers with a safe, reliable source of water for over 100 years. The production and delivery of safe potable water is the objective of greatest priority for a public water utility and reflects AQUA's mission to "Enhance public health and safety by providing cost effective, reliable water services to customers in the state of Pennsylvania".

Today, AQUA Pennsylvania, Inc. provides drinking water to approximately 440,000 customer accounts (about 1.4 million people) throughout Pennsylvania. The company operates three major regional divisions: southeastern Pennsylvania, central and northern Pennsylvania, and western Pennsylvania. This vast distribution system supplies thousands of fire hydrants, industrial and commercial facilities and residential properties through services ranging from ¾" to 12". The concern for our high-quality product does not end with the treatment process but extends to the protection of its quality throughout the distribution system.

When safe water has been produced and put into the public distribution system, precautions must be taken to be certain that it is not contaminated by other sources. Such a contamination can occur via Cross Connections. AQUA Pennsylvania, Inc. Cross Connection Control by Containment Program is designed to work with customers and prevent possible contamination originating on the customer's premises from entering and degrading the public distribution system, thus protecting the public drinking water supply. The responsibility for Cross Connection Control does not rest solely or mainly with AQUA Pennsylvania, Inc. The customer has a significant and primary legal duty to prevent contamination originating on his property from jeopardizing the safety of the public dependent upon the distribution system for drinking water supply.

AQUA Pennsylvania, Inc. as a water purveyor, is proud of its accomplishments in providing its customers with safe drinking water. However, the growing potential for Cross Connection contamination originating from the customer's premises and entering and degrading the water in the public distribution system is a problem of continuing concern and ever-increasing possibility. The opportunities for Cross Connection contamination have grown so numerous that AQUA recognizes the need to expand and reinforce its education and enforcement efforts. A major portion of the program involves the customer's duty to use independent and certified professionals to inspect the customer's premises for Cross Connections and to install and test Cross Connection assemblies.

The rules and regulations pertinent to protecting the health and safety of individuals and the public from Cross Connections are addressed in this manual. AQUA reserves the right to revise and amend their Cross-Connection policies.

It is our intent to provide you with the information needed to meet our requirements, as well as those on federal, state, and local levels. Should you have any questions or comments, please contact AQUA Pennsylvania Customer Service via phone by calling our toll-free number at 877.987.2782

TABLE OF CONTENTS

Section 1 - General Policy
- 1.1 - Application
- 1.2 - Policy

Section 2 - Water System
Section 3 - Cross-Connections Prohibited
Section 4 - Surveys and Investigations
Section 5 - Where Protection is Required
Section 6 - Type of Protection Required
Section 7 - Backflow Prevention Devices
Section 8 - Installation
Section 9 - Inspection and Maintenance
Section 10 - Booster Pumps
Section 11 – Geothermal Heating Systems
Section 12 – Violations
Section 13 – Hydrant Use Restrictions
Plumbing Codes
Glossary
Appendix

I. Backflow Installations Illustration Diagram 5/8", ¾" and 1" Domestic Service Line
II. Backflow Installations Illustration Diagram 1 ½" and 2" Domestic Service Line
III. Backflow Installations Illustration Diagram 3" and up Domestic Service Line
IV. Backflow Installations Illustration Diagram 1", 1.5" and 2" Fire Service Lines
V. Backflow Installations Illustration Diagram Closed Fire Service Lines
VI. Backflow Installations Illustration Diagram Open Fire Service Lines
VII. Backflow Installations Illustration Diagram Vertical Installations
VIII. Pennsylvania DEP 25 -109 709, Cross-Connection Control Regulations Summary
IX. Public Water Supply Manual - Part VII Cross Connection Control / Backflow Prevention. Table VII-3.1 Recommended Backflow Prevention Devices
X. Well Abandonment AWWA Standard A 100-90
XI. International Plumbing Code (IPC) Section 312 Testing and Inspections
XII. Backflow Prevention Assembly Test & Maintenance Form

Section 1 General Policy

1.0 Purpose.

a. To protect AQUA Pennsylvania, Inc water supply system form contamination or pollution by isolating within the customer's water system contaminants or pollutants which could backflow through the service connection into Aqua's water supply system.

b. To promote the elimination or control of existing Cross Connections, actual or potential, between AQUA Pennsylvania, Inc or customer's potable water system and non-potable water system, plumbing fixtures and sources or systems containing process fluids.

c. To provide for the maintenance of a continuing program of Cross Connection control which will systematically and effectively prevent the contamination or pollution of AQUA Pennsylvania, Inc, and the customer's potable water system.

1.1 Application.

This policy shall apply to all premises (commercial and non-commercial) served by AQUA Pennsylvania, Inc water supply system.

1.2 Policy.

AQUA Pennsylvania, Inc and the customer have the joint responsibility for the protection of the water supply system from contamination due to backflow of contaminants through the water service connection. If, in the judgment of AQUA Pennsylvania, Inc or its authorized representative, an approved backflow prevention assembly is required. AQUA Pennsylvania, Inc shall give notice to the customer to install such approved backflow prevention assembly at each service connection to his premises. The customer shall install such approved assembly or assemblies at his own expense within 90 days of receiving written notification from AQUA Pennsylvania, Inc; and failure, refusal or inability on the part of the customer to install such assembly or assemblies shall constitute grounds for discontinuing water service until such assembly or assemblies have been installed and tested by a backflow prevention tester certified by the American Society of Sanitary Engineers (ASSE).

Section 2 Water Systems

2.1 The water system shall be considered as made up of two parts: AQUA Pennsylvania, Inc (public water supply) and the customer's water system.

2.2 AQUA Pennsylvania, Inc water system shall consist of the source facilities and the distribution system and shall include all those facilities under the control of AQUA Pennsylvania, Inc up to the point where the customer's water system begins. The point of delivery and sale for any water service furnished to the Customer shall be at the Curb Stop.

2.3 The source shall include all components of the facilities utilized in the production, treatment, storage, and delivery of water to AQUA Pennsylvania, Inc distribution system.

2.4 AQUA Pennsylvania, Inc distribution system shall include the network of conduits used for delivery of water from the source to the customer's water system.

2.5 The customer's water system shall include all facilities beyond the service connection, which are utilized in conveying water from Aqua's distribution system to points of use.

Section 3 Cross Connection Prohibited

3.1 No water service connection shall be installed or maintained to any premises where actual or potential Cross Connections to AQUA Pennsylvania, Inc water supply system or customer's water system may exist.

3.2 No connection shall be installed or maintained whereby water from an auxiliary water supply may enter a public or customer's water system.

Section 4 Survey and Investigations

4.1 The customer's premises shall be open at all reasonable times upon notice by AQUA Pennsylvania, Inc or its authorized representatives for the purposes of conducting surveys and investigations of water use practices within the customer's premises to determine whether there are direct or indirect Cross Connections to the customer's water system through which contaminants or pollutants could backflow into Aqua's potable water system.

4.2 On request by AQUA Pennsylvania, Inc, the customer shall furnish information on water use practices within his or her premises.

4.3 It shall be the responsibility of the water customer to conduct periodic surveys of water use practices on their premises to determine whether there are actual or potential Cross Connections to the water system through which contaminants or pollutants could backflow into AQUA Pennsylvania, Inc water supply system.

Section 5 Where Protection is Required

5.1 An approved backflow prevention assembly shall be installed prior to the first branch line leading off each service line to the customer's water system.

Section 6 Type of Protection Required

6.1 All facilities will be listed under one of the following priority levels based on Degree of Hazard as defined in ASSE/ANSI Series 5000:

1. High Hazard
2. Low Hazard
3. Non-Hazardous Facilities

6.2 The type of protection required under Section 6.1 of this policy shall depend on the degree of hazard which exists as follows:

a) An approved air gap separation shall be installed where AQUA Pennsylvania, Inc water supply system may be contaminated with substances that are dangerous to Aqua's health and could cause a severe health hazard. A severe health hazard is defined as sewage and radioactive materials.

b) An approved air gap separation or an approved reduced pressure zone backflow prevention assembly shall be installed where Aqua's water supply system may be contaminated with a substance that could cause a system or health hazard.

c) An approved air gap separation or an approved reduced pressure principal assembly backflow prevention assembly or an approved double check valve assembly shall be installed where AQUA Pennsylvania, Inc water supply system may be polluted with substance that would be objectionable, but not dangerous to health.

d) An approved pressure vacuum breaker assembly or spill resistant pressure vacuum breaker assembly shall not be installed in place of the above-mentioned assemblies and may under no circumstance be used for containment protection of the service connection. These assemblies may only be used in connection with the appropriate containment assembly to provide combined protection subject to the approval of Aqua to abate indirect Cross Connections.

Section 7 Backflow Prevention Devices

7.1 Any backflow prevention assembly required by this policy shall be of a model or construction approved by AQUA Pennsylvania, Inc and shall comply with the following:

a) Air gap separation to be approved shall be at least twice the diameter of the supply pipe, measured vertically above the top rim of the vessel, but in no case less than one inch.

b) A Dual Check, Double Check Valve Assembly or a Reduced Pressure Principal Assembly shall be approved by AQUA Pennsylvania, Inc and shall mean an assembly that has been manufactured in full conformance with standard established by the American Society of Sanitary Engineering (ASSE) entitled:

- ASSE/ANSI 1015 Standard for Double Check Valve Backflow Assemblies
- ASSE/ANSI 1013 Standard for Reduced Pressure Principle Backflow Prevention Assemblies
- ASSE / ANSI 1024 Performance Requirements for Dual Check Backflow Preventors.
- ASSE/ANSI 1047 Standards for Reduced Pressure Principle Detector Assemblies.
- ASSE/ANSI 1048 Standards for Double Check Detector Assemblies.

7.2 Existing backflow prevention devices approved by AQUA Pennsylvania, Inc at the time of installation and properly maintained shall, except for inspection and maintenance requirements, be excluded from the requirement of Section 7.1 of this ordinance provided the public water supplier is assured that they will satisfactorily protect the public water supply system. Whenever changes are made to the existing system or when the public water supplier finds that the maintenance of the device constitutes a hazard to health, the device shall be replaced by a backflow prevention device meeting the requirements of this ordinance.

Section 8 Installation

8.1 Backflow prevention assemblies required by this policy shall be installed at a location and in a manner approved by AQUA Pennsylvania, Inc and shall be installed by a person properly qualified and at the expense of the water customer.

8.2 Backflow prevention assemblies installed on the service line to a customer's water system shall be located on the customer's side of the water meter, as close to the meter as is reasonably practical, and prior to any other connection as approved by AQUA Pennsylvania, Inc.

8.3 Pits or vaults shall be of water-tight construction and be so located and constructed as to prevent flooding and shall be maintained free from standing water by means of either a sump or pump or a suitable drain. Such sump pump or drain shall not connect to a sanitary sewer nor permit flooding of the pit or vault by reverse flow from its point of discharge. An access ladder and adequate natural or artificial lighting shall be provided to permit maintenance inspection and testing of the backflow prevention assembly.

8.4 When installing a backflow prevention assembly, the installer must comply with the IPC and ASSE/ANSI standards and be aware of all OSHA safety considerations when installations are performed. Major safety considerations are thermal expansion and assembly discharge damage. Thermal expansion can cause hot water tanks and other storage vessels to explode when there are no provisions made for thermal expansion. AQUA Pennsylvania, Inc strongly recommends the installation of a thermal expansion tank on hot water heaters to prevent the hot water heaters relief valve from discharging or, more importantly, from exploding. Many backflow prevention assemblies discharge large amounts of water for various reasons. This discharge of water could obviously pose a hazard when the valves are discharging onto or around electrical equipment. Equipment damage or electrocution could occur. The installer must ensure that valve discharge will not cause safety hazards or property damage. Thermal expansion is a concern anytime substances are confined (in a closed system) and are heated.

Section 9 Inspection and Maintenance

9.1 It shall be the duty of the customer at any premises on which backflow prevention assemblies are required by this policy, to have inspections, tests, and overhaul made in accordance with the following schedule, or more often where inspections indicate a need.

a) Air separation shall be inspected at the time of installation, and at least every 12 months thereafter.

b) Double check valve assemblies shall be inspected and tested for tightness or the time of installation, and at least every 12 months thereafter. These assemblies shall be dismantled, inspected internally, cleaned, and repaired whenever needed.

c) Reduced pressure zone assemblies shall be inspected and tested for tightness at the time of installation, and at least every 12 months thereafter. These assemblies shall be dismantled, inspected internally, cleaned, and repaired whenever needed.

d) Interchangeable connections shall be inspected at the time of installation and at least every 12 months thereafter.

9.2 Inspections, tests, and overhaul of backflow prevention assemblies shall be made at the expense of the water customer and shall be performed by a person actively certified by the American Society of Engineers ASSE/ANSI Series 5000.

9.3 Whenever backflow prevention assemblies required by these regulations are found to be defective, they shall be repaired or replaced according to manufacturer's recommendation at the expense of the customer within 30 days of notice from AQUA Pennsylvania, Inc.

9.4 The water customer must maintain a complete record of each backflow prevention assembly from purchase to retirement. This shall include a comprehensive listing that includes a record of all tests, inspections, and repairs. Records of inspections, tests, repairs, and overhaul shall be submitted to AQUA Pennsylvania, Inc.

9.5 Backflow prevention assemblies shall not be bypassed, made inoperative, removed, modified, or otherwise made ineffective without specific authorization by AQUA Pennsylvania, Inc. Bypasses are only permitted when matched protection is provided meaning that the bypass must contain the same level of protection as the primary service line. On a parallel service connection backflow prevention assembly must be of the same size and type.

Section 10 Booster Pumps

10.1 Where a booster pump has been installed on the service line to or within any premises, such a pump shall be equipped with a low pressure cut-off assembly designed to shut-off the booster pump when the pressure in the service line on the suction side of the pump drops to ten pounds per square inch gauge pressure, or less, for a period of 30 seconds or longer.

10.2 It shall be the duty of the water customer to maintain the low-pressure cut-off assembly in proper working order and to certify to AQUA Pennsylvania, Inc, at least once a year, that the assembly is operation properly.

Section 11 Geothermal Heating Systems

11.1 All geothermal heating equipment must be physically disconnected from the potable water system. No water may be taken for geothermal uses (or any other use) and re-injected into the potable water supply.

Section 12 Violations

12.1 AQUA Pennsylvania, Inc shall deny or discontinue, after reasonable notice, in writing, the water service to any premises wherein any backflow prevention assembly required by this policy is not installed, tested, and maintained in a manner acceptable to AQUA Pennsylvania, Inc, or if it is found that the backflow prevention assembly has been removed or by-passed, or if an unprotected Cross Connection exists on the premises, or if a low pressure cut-off assembly required by this policy is not installed and maintained in proper working order.

12.2 Water service to such premises shall not be restored until the customer has corrected or eliminated such conditions or defects in conformance with this policy and to the satisfaction of AQUA Pennsylvania, Inc.

Section 13 Hydrant Use Restrictions

13.1 Only authorized persons shall be permitted to use hydrants. Tampering with the hydrants by unauthorized persons is prohibited. Any person wishing to use the hydrants (other than AQUA Pennsylvania, Inc, and fire companies) must be permitted. Permits may be obtained from the local AQUA Pennsylvania, Inc office. (May not apply to all service areas).

Plumbing Codes

The following is a list of plumbing codes which DEP is aware of at the time of the development of this part of the Public Water Supply Manual. The purpose of this list is to provide information on the availability of various plumbing codes and not to recommend a preference for one code over another. Revisions of this list will be made in the future, as information on other plumbing codes becomes available.

1. The BOCA Plumbing Code

   The Building Officials and Code Administrators International, Inc.
   4051 West Flossmoor Road
   Country Club Hills, Illinois, 60478
   Telephone (708) 799-2300
   www.bocai.org

2. The International Plumbing Code

   The Building Officials and Code Administrators International, Inc.
   4051 West Flossmoor Road
   Country Club Hills, Illinois, 60478
   Telephone (708) 799-2300
   www.bocai.org

3. The Uniform Plumbing Code

   The International Association of Plumbing and
   Mechanical Officials
   20001 Walnut Dr. South
   Walnut, CA 91789
   Telephone (909) 595-8449
   www.iapmo.com

GLOSSARY

1. **Air Gap Separation** - The unobstructed vertical distance through the free atmosphere between the lowest opening from any pipe or faucet supplying potable water to a tank, plumbing fixture, or other device and the flood level rim of the receptacle. The differential distance shall be at least double the diameter (2 x D) of the supply pipe measured vertically above the top of the rim of the vessel. In no case, shall the air gap be less than one inch.

2. **Approved** - A backflow prevention device or method that has been accepted by the public water supplier as suitable for the proposed use.

3. **Atmospheric Vacuum Breaker (AVB**) - A fixture outlet device containing an optional shutoff valve followed by a valve body containing a soft-seated float-check, a check seat, and an air inlet port. If the shutoff valve is open, the flow of water causes the float to close the air inlet port. If the shutoff valve is closed, the float falls and forms a check valve against backsiphonage and at the same time opens the air inlet port. If no shutoff valve is provided, the flow of water will determine the opening and closing of the air inlet port.

4. **Auxiliary Water System -** Any water source or system on the premises of, or available to, the customer except connections to other approved community water supply systems.

5. **Backflow** - A flow condition, induced by a differential in pressure, that causes the flow of water or mixtures of water and other substances into the distribution pipes of a potable water supply system from a source other than its intended source. Backflow can result from either backsiphonage or backpressure.

6. **Backflow Preventer** - A device or other means which will prevent the backflow of water or any other substance into the public water supply system.

7. **Backpressure** - The backflow of water or a mixture of water and other substances from a plumbing fixture or other customer source, into a public water supply system due to an increase of pressure in the fixture or customer source to a value that exceeds the system pressure.

8. **Backsiphonage** - The backflow of water or a mixture of water and other substances from a plumbing fixture or other customer source, into a public water supply system due to a temporary negative or sub-atmospheric pressure within the public water supply system.

9. **Consumer -** The owner or person in control of any premises supplied by or in any manner connected to a public water supply system.

10. **Consumer's Water System** - Any water system, located on the consumer's premises, supplied by or in any manner connected to a public water supply system. A household plumbing system is a consumer's water system.

11. **Containment** - Cross-connection control which isolates the customer's entire facility from the public water supply system so as to provide the protection necessary to prevent contamination of the public water supply in the event of backflow from the customer's facility. Though containment control prevents contamination of the public water supply, it offers no protection to the water distribution system within the facility. Reduced pressure zone devices are used for containment control.

12. **Contamination** - The degradation of the quality of the drinking water by wastewaters, processed fluids, or any water of a quality less than accepted drinking water quality to a degree which would create an actual hazard to the public health through poisoning or through the spread of disease.

13. **Cross-connection** - An arrangement allowing either a direct or indirect connection through which backflow, including backsiphonage, can occur between the drinking water in a public water system and a system containing a source or potential source of contamination, or allowing treated water to be removed from any public water system, used for any purpose or routed through any device or pipes outside the public water system, and returned to the public water system. The term does not include connections to devices totally within the control of one or more public water systems and connections between water mains.

14. **Degree of Hazard** - An evaluation of the potential risk to health and the adverse effect upon the public water supply system.

15. **Double Check Valve Assembly (DCVA**) - An assembly composed of two single, independently acting, soft-seated, spring-loaded check valves including tightly closing shutoff valves located at each end of the assembly and suitable connections for testing the water tightness of each check valve.

16. **Fixture Outlet Protection** - Cross-connection control which isolates all free-flowing fixture outlets (i.e., faucets) from the water distribution system within a facility. Fixture outlet protection prevents backflow contamination of both the facility water system and the public water supply. Examples of fixture outlet protection devices include atmospheric vacuum breakers, hose-bibb vacuum breakers, and pressure vacuum breakers.

17. **Health Hazard** - Any condition, device, or practice in a water system or its operation that creates, or may create, a danger to the health and well-being of its users. The word "severe", as used to qualify "health hazard", means a hazard to the health of the user that could reasonably be expected to result in significant morbidity or death.

18. **Hose-Bibb Vacuum Breaker (HBVB)** - A fixture outlet device which contains a soft-seated, spring-loaded, air inlet valve and is designed to be attached to an outlet having a hose connection thread.

19. **Interchangeable Connection** - An arrangement or device that will allow alternate, but not simultaneous, use of two sources of water.

20. **Internal Protection** - Cross-connection control which isolates all non-outlet, water-use appliances within a facility (e.g., kitchen appliances, air conditioners, boilers, process tanks, photo developing equipment) from the water distribution system within the facility. Internal protection prevents backflow contamination of both the facility water system and the public water supply. Reduced pressure zone devices and double check valve assemblies are used for internal protection.

21. **Non-Health Hazard** - Any condition, device or practice in a water system or its operation that creates, or may create, an impairment of the quality of the water to a degree which does not create a hazard to the public health, but which does adversely and unreasonably affect the aesthetic qualities of such water for domestic use.

22. **Non-Potable Water** - Water not safe for drinking, personal, culinary, or any other type of domestic use.

23. **Person** - Any individual, partnership, association, company, corporation, municipality, municipal authority, political subdivision, or any agency of federal or state government. The term includes the officers, employees and agents of any partnership, association, company, corporation, municipality, municipal authority, political subdivision, or any agency of federal or state government.

24. **Pollution** - The presence in water of any foreign substance that tends to degrade its quality so as to constitute a hazard, or to impair the usefulness or quality of the water to a degree which does not create an actual hazard to the public health, but which does adversely and unreasonably affect such waters for domestic use.

25. **Potable Water -** Water which is satisfactory for drinking, personal, culinary, and domestic purposes and meets the requirements of DEP.

26. **Pressure Vacuum Breaker (PVB)** - A fixture outlet device containing an independently operating, soft-seated, spring-loaded check valve and an independently operating, soft-seated, spring-loaded, air inlet valve on the discharge side of the check valve.

27. **Process Fluids** - Any fluid or solution which may be chemically, biologically, or otherwise contaminated or polluted in a form or concentration such as would constitute a health, pollution, or system hazard if introduced into the public or a consumer's water system. This includes, but is not limited to:

    a. Polluted or contaminated waters.
    b. Process waters; sanitary quality.
    d. Cooling waters.
    e. Contaminated natural waters taken from wells, lakes, streams, or irrigation systems.
    f. Chemicals in solution or suspension.
    g. Oils, gases, acids, alkalis, and other liquid or gaseous fluids used in industrial or other processes, or for firefighting purposes.
    h. Heating system waters from boilers or heat pumps.

28. **Public Water Supplier** - A person who owns or operates a public water system.

29. **Public Water Supply System -** A system which provides water to the public for human consumption which has at least 15 service connections or regularly serves an average of at least 25 individuals daily at least 60 days out of the year. The term includes any collection, treatment, storage, and distribution facilities under control of the operator of the system and used in connection with the system. The term includes collection or pretreatment storage facilities not under such control which are used in connection with the system. The term also includes a system which provides water for human consumption via bottling, vending machines, retail sale, or bulk hauling methods.

30. **Reduced Pressure Zone Device (RPZD)** - A device which contains two independently acting, soft-seated, spring-loaded check valves, together with a soft-seated, spring-loaded, diaphragm-activated, pressure differential relief valve located between the two check valves. During normal flow and at the cessation of normal flow, the pressure between these two checks shall be less than the supply pressure. In case of leakage of either check valve, the differential relief valve, shall maintain the pressure between the checks at less than the supply pressure by opening to the atmosphere. The device must include tightly closing shutoff valves located at each end, and each device shall be fitted with properly located test cocks.

31. **Residential Dual Check Valve (RDCV)** - A non-testable backflow prevention device that is used for containment control of residential homes and consists of two independently operating, soft-seated, spring-loaded, consecutive check valves.

32. **Service Connection -** The terminal-end of a service line from the public water supply system. If a meter is installed at the end of the service line, then the service connection means the downstream end of the meter.

33. **System Hazard** - A condition posing an actual or potential threat of damage to the physical properties of the public water system or to the consumer's potable water system.

APPENDIX – I

DOMESTIC SERVICE – 5/8", 3/4", and 1" METERS

__ LOW PRESSURE
(up to 80 psi)

__ HIGH PRESSURE
(where pressure may exceed 80 psi)
See note below.

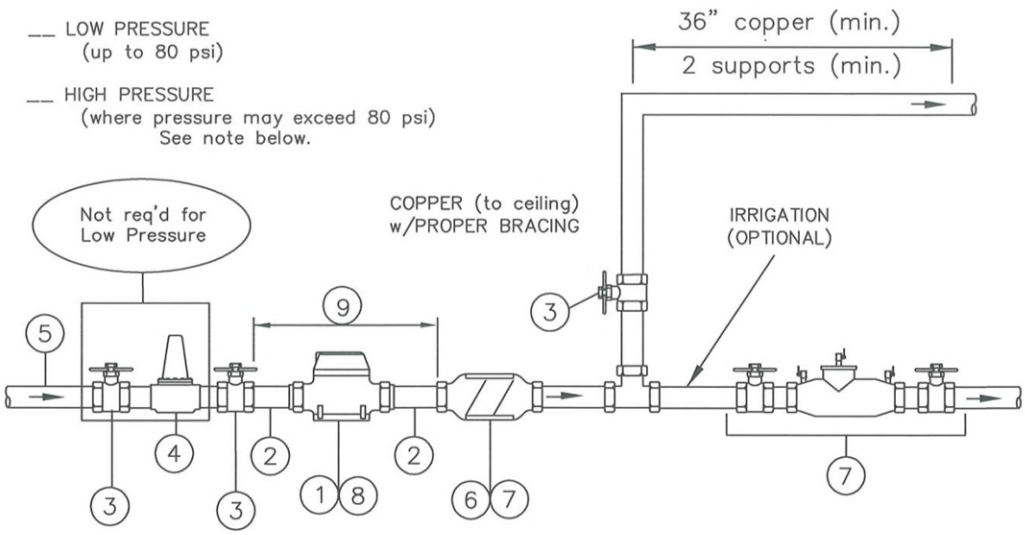

	ITEM			
1	Meter (by Water Co.)	**5/8" x 3/4"**	**3/4"**	**1"**
2	Meter Couplings (standard length)	3/4"	3/4"	1"
	Ford Meter Box Part No.	C38-23-2.5	C38-23-2.5	C38-44-2.625
3	Full-port Ball Valve	3/4"	3/4"	1"
4	Pressure Reducing Valve (PRV)	SIZED BY CUSTOMER		
5	Line Size ("K" copper)	3/4"	3/4"	1"
6	Residential Dual Check Valve	3/4"	3/4"	1"
7	Backflow device - DCVA or RPZA (Irrig. or Non-Residential)	3/4"	3/4"	1"
	type determined by the Water Company.			
8	Laying Length of Meter	7 1/2"	9"	10 3/4"
9	Laying Length of Meter and Couplings	12"	13 3/8"	15 1/4"

Notes:

A. It is the CUSTOMER's responsibility to address THERMAL EXPANSION before the installation of a PRV or backflow device.

B. A pressure vacuum breaker must be installed on all hose–bib connections.

C. Water Company Rules & Regulations require that all of the specifications are met and a meter is set before water service is turned on.

D. It is the CUSTOMER's responsibility to size the pressure reducing valve(s) to fit their flow needs. Two–stage reduction may be needed where there is a wide variation between the initial pressure and the reduced pressure. Parallel installation may be needed where there is a wide variation of reduced pressure requirements, where it is vital to maintain a continuous water supply, or other reasons for improved performance.

E. Each part must be NSF/ANSI 61 (Annex F & G) compliant.
Entire unit must be NSF/ANSI 372 compliant.

rev. 06–07–13

AQUA	
Domestic Service 5/8"–1" Meters	
ck'd by: MJF	Plan No. D–1

APPENDIX – II

DOMESTIC SERVICE – 1.5" and 2" METERS

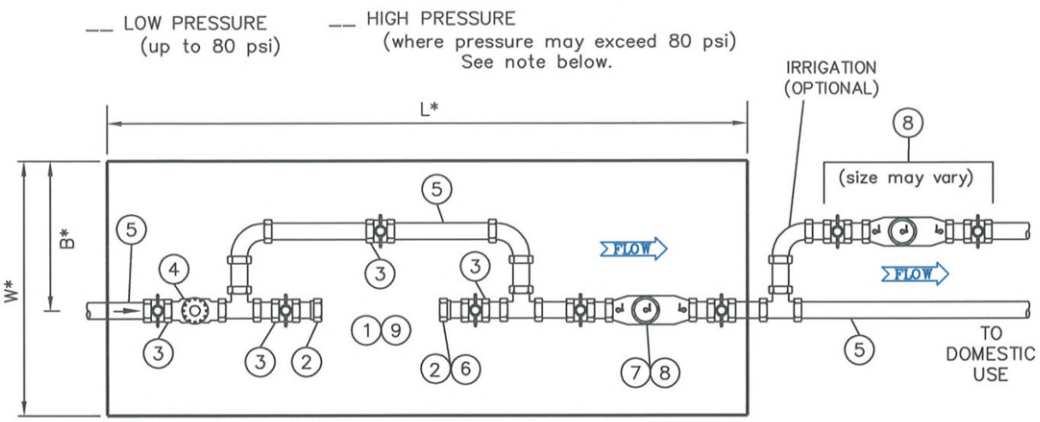

* Refer to PLAN No. D–4 for pit dimensions.

	ITEM		
1	Meter (by Water Co.)	1.5"	2"
2	Meter Flange - Bronze, 2-bolt pattern	1.5"	2"
	Ford Meter Box Part No.	CF31-66	CF31-77
3	Full-port Ball Valve	1.5"	2"
4	Pressure Reducing Valve (PRV)	SIZED BY CUSTOMER	
5	Line Size ("K" copper)	1.5"	2"
6	Loc-Pac Meter Coupling (PIT ONLY)	1.5"	2"
	Ford Meter Box Part No. (for Copper)	CF34-66	CF34-77
	Ford Meter Box Part No. (for Brass)	CF35-66	CF35-77
7	Residential Dual Check Valve	1.5"	2"
8	Backflow device - DCVA or RPZA (Irrig. or Non-Residential)	1.5"	2"
	type determined by the Water Company.		
9	Laying Length of Meter (face to face). Add 1/4" for gaskets.	13"	17"

Notes:

A. It is the CUSTOMER's responsibility to address THERMAL EXPANSION before the installation of a PRV or backflow device.

B. A pressure vacuum breaker must be installed on all hose–bib connections.

C. Water Company Rules & Regulations require that all of the specifications are met and a meter is set before water service is turned on.

D. It is the CUSTOMER's responsibility to size the pressure reducing valve(s) to fit their flow needs. Two–stage reduction may be needed where there is a wide variation between the initial pressure and the reduced pressure. Parallel installation may be needed where there is a wide variation of reduced pressure requirements, where it is vital to maintain a continuous water supply, or other reasons for improved performance.

E. Each part must be NSF/ANSI 61 (Annex F & G) compliant. Entire unit must be NSF/ANSI 372 compliant.

rev. 06–07–13

AQUA	
Domestic Service 1.5" – 2" Meters	
ck'd by: MJF	Plan No. D–2

APPENDIX – III

DOMESTIC SERVICE – 3" through 10" METERS

__ LOW PRESSURE (up to 100 psi)

__ HIGH PRESSURE (where pressure may exceed 100 psi) See note below.

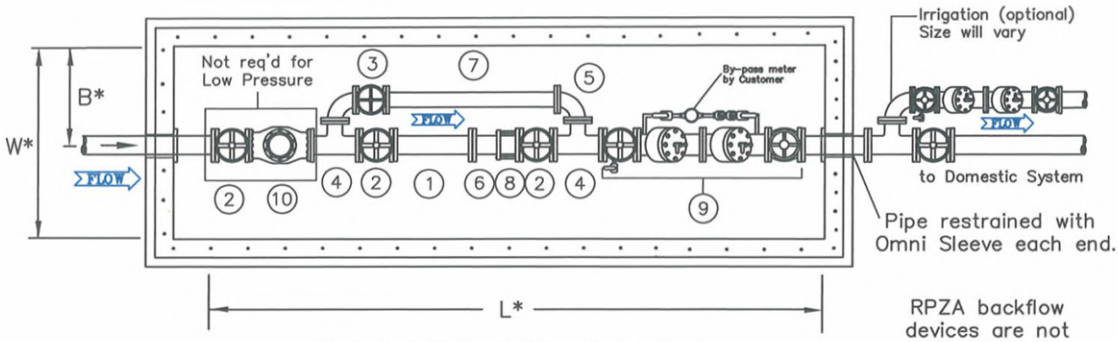

RPZA backflow devices are not permitted in pits.

* Refer to PLAN No. D–4 for pit dimensions.

	DESCRIPTION					
1	Meter	3"	4"	6"	8"	10"
	Meter Length (flange to flange)	33.25"	33.25"	36.5"	53"	68"
2	R.S. Gate Valve, OS&Y, Flg (mainline)	3"	4"	6"	8"	10"
3	R.S. Gate Valve, OS&Y, Flg (by-pass)	3"	3"	4"	6"	6"
4	By-pass Tee	3" x 3"	4" x 3"	6" x 4"	8" x 6"	10" x 6"
5	Long Radius 90o Bend	3"	3"	4"	6"	6"
6	Spool Piece, Flg x PE (for exp. cpl'g.)	1' - 0" MINIMUM w/ 1" traverse gap in exp cpl'g				
7	Spool Piece, Flg x Flg (for by-pass)	LENGTH AS NEEDED				
8	Flanged Coupling Adaptor (PIT ONLY)	Ford - Style FFCA or Smith-Blair - Style 912				
9	Backflow device - DCVA or RPZ	3"	4"	6"	8"	10"
	as req'd by the Water Company.					
10	Pressure Reducing Valve (PRV)	SIZED BY CUSTOMER				

Notes:

A. It is the CUSTOMER's responsibility to address THERMAL EXPANSION before the installation of a PRV or backflow device.

B. A pressure vacuum breaker must be installed on all hose–bib connections.

C. Water Company Rules & Regulations require that all of the specifications are met and a meter is set before water service is turned on.

D. It is the CUSTOMER's responsibility to size the pressure reducing valve(s) to fit their flow needs. Two–stage reduction may be needed where there is a wide variation between the initial pressure and the reduced pressure. Parallel installation may be needed where there is a wide variation of reduced pressure requirements, where it is vital to maintain a continuous water supply, or other reasons for improved performance.

E. Incoming service size should equal meter size. If the meter size is approved to be smaller than the service size, the meter space shall be replaced with a spacer for the approved meter size and concentric reducers on each side of the meter spacer. The length of the meter pit may increase.

F. Each part must be NSF/ANSI 61 (Annex F & G) compliant.
Entire unit must be NSF/ANSI 372 compliant.

rev. 06–10–13

AQUA	
Domestic Service - 3" to 10"	
ck'd by: MJF	Plan No. D-3

APPENDIX – IV

FIRE SERVICE LINES – 1", 1.5", and 2"

Residential __ LOW PRESSURE (up to 100 psi) __ HIGH PRESSURE (where pressure may exceed 100 psi) See note below.

Non-Residential __ LOW PRESSURE (up to 150 psi) __ HIGH PRESSURE (where pressure may exceed 150 psi) See note below.

RPZA for systems with chemical additives (anti–freeze systems)
DCVA for systems with no chemical additives

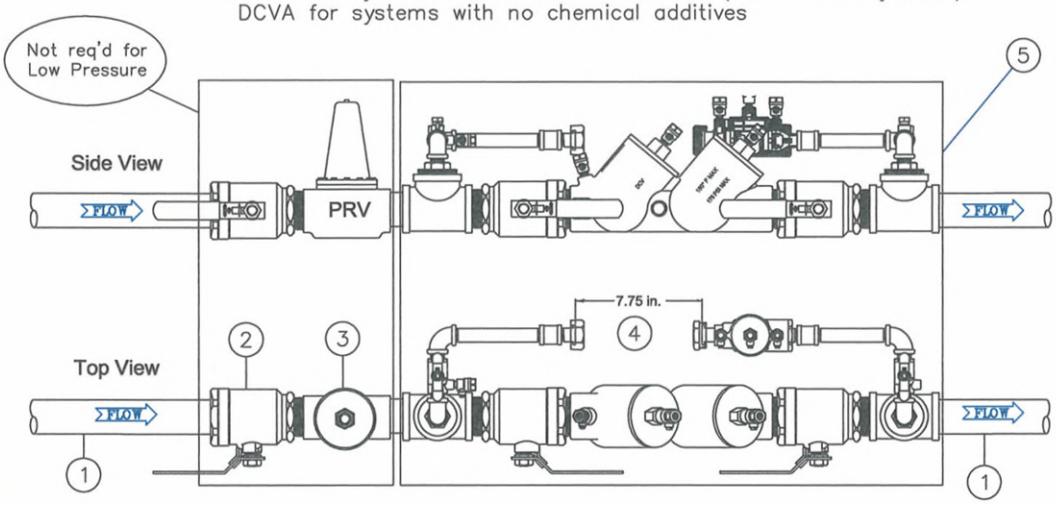

	ITEM			
1	Line Size ("K" copper) as approved by the Water Co.	1"	1.5"	2"
2	Full-port Ball Valve	1"	1.5"	2"
3	Pressure Reducing Valve (PRV)	SIZED BY CUSTOMER		
4	Meter (by Water Co.)	5/8" x 3/4"	5/8" x 3/4"	5/8" x 3/4"
5	Backflow device - DCVA or RPZA	1"	1.5"	2"
	DCDA - Apollo Valves part No. (shown above)	Series 40-600		
	RPDA - Apollo Valves part No.	Series 40-700		

Notes:

A. It is the CUSTOMER's responsibility to address THERMAL EXPANSION before the installation of a PRV or backflow device. All Fire systems should have a Pressure Relief Valve.

B. Water Company Rules & Regulations require that all of the specifications are met and a meter is set before water service is turned on.

C. It is the CUSTOMER's responsibility to size the pressure reducing valve(s) to fit their flow needs. Two–stage reduction may be needed where there is a wide variation between the initial pressure and the reduced pressure. Parallel installation may be needed where there is a wide variation of reduced pressure requirements, where it is vital to maintain a continuous water supply, or other reasons for improved performance.

D. Each part must be NSF/ANSI 61 (Annex F & G) compliant. Entire unit must be NSF/ANSI 372 compliant.

E. DCDA Assembly must be UL & FM approved.

rev. 06–07–13

AQUA	
Fire Service Lines 1", 1.5" & 2"	
ck'd by: MJF	Plan No. F–1

APPENDIX – V

FIRE SERVICE LINES – 4", 6", 8", and 10"

"Closed System" has no fire hydrants

Residential __ LOW PRESSURE (up to 100 psi) __ HIGH PRESSURE (where pressure may exceed 100 psi) See note below.

Non-Residential __ LOW PRESSURE (up to 150 psi) __ HIGH PRESSURE (where pressure may exceed 150 psi) See note below.

RPZA for systems with chemical additives (anti–freeze systems)
DCVA for systems with no chemical additives

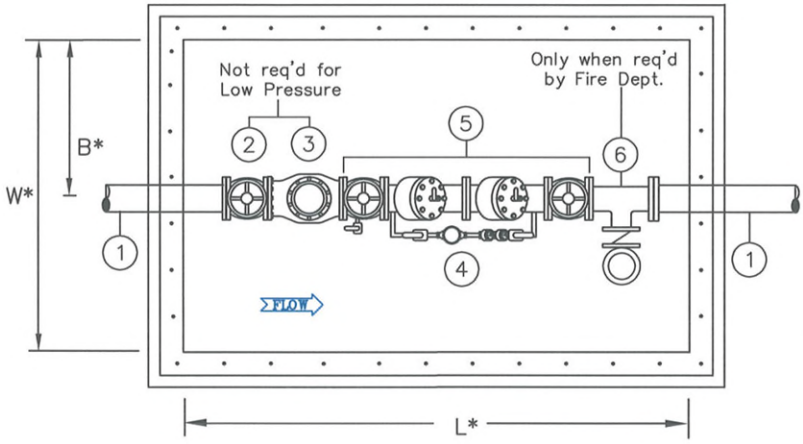

RPZA backflow devices are not permitted in pits.

To System

* Refer to PLAN No. F–4 for pit dimensions.

	ITEM				
1	Line Size (Cement–lined D.I.P.) as approved by Aqua	4"	6"	8"	10"
2	R.S. Gate Valve, O.S.&Y., Flanged	4"	6"	8"	10"
3	Pressure Reducing Valve (PRV)	SIZED BY CUSTOMER			
4	Meter (by Aqua)	5/8 x 3/4"	5/8 x 3/4"	5/8 x 3/4"	5/8 x 3/4"
5	Backflow Device Assembly – DCDA or RPDA	4"	6"	8"	10"
6	Tee for FDC, only if req'd by local Fire Dept.	4"	6"	8"	10"
	Branchline sized by local Fire Department if required.	SIZED BY LOCAL FIRE DEPARTMENT			

Notes:

A. It is the CUSTOMER's responsibility to address THERMAL EXPANSION before the installation of a PRV or backflow device. All Fire systems should have a Pressure Relief Valve.

B. Water Company Rules & Regulations require that all of the specifications are met and a meter is set before water service is turned on.

C. It is the CUSTOMER's responsibility to size the pressure reducing valve(s) to fit their flow needs. Two–stage reduction may be needed where there is a wide variation between the initial pressure and the reduced pressure. Parallel installation may be needed where there is a wide variation of reduced pressure requirements, where it is vital to maintain a continuous water supply, or other reasons for improved performance.

D. Each part must be NSF/ANSI 61 (Annex F & G) compliant. Entire unit must be NSF/ANSI 372 compliant.

rev. 06–07–13

AQUA	
"Closed" Fire Lines 4" to 10"	
ck'd by: MJF	Plan No. F–2

APPENDIX – VI

FIRE SERVICE LINES – 6", 8", and 10"

"Open System" has fire hydrants, meter pit is req'd

Non-Residential __ LOW PRESSURE (up to 150 psi) __ HIGH PRESSURE (where pressure may exceed 150 psi) See note below.

RPZA for systems with chemical additives (anti–freeze systems)
DCVA for systems with no chemical additives

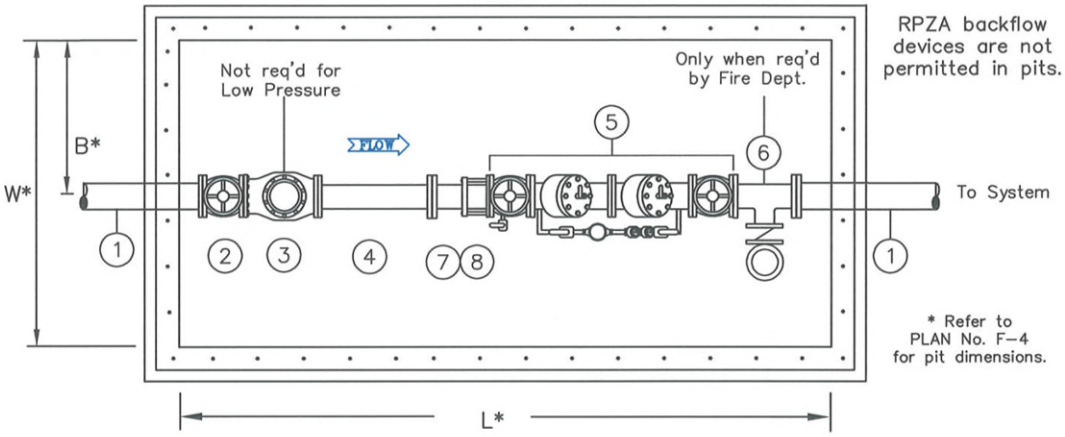

	ITEM			
1	Line Size (Cement-lined D.I.P.) as approved by the Water Co.	6'	8'	10'
2	R.S. Gate Valves, O.S.&.Y., flanged	6'	8'	10'
3	Pressure Reducing Valve (PRV)	SIZED BY CUSTOMER		
4	Meter (by Water Co.)	45'	53'	65'
5	Backflow device Assembly - DCDA or RPDA	6'	8'	10'
6	Tee for FDC, only if required by local Fire Dept.	6'	8'	10'
	Branch line sized by local Fire Dept. if req'd	SIZED BY LOCAL FIRE DEPT.		
7	Spool Piece, Flg X PE - length = 12" (minimum)	6'	8'	10'
8	Flanged Coupling Adapter	Ford, Style FFCA or Smith-Blair, Style 913		

Notes:

A. It is the CUSTOMER's responsibility to address THERMAL EXPANSION before the installation of a PRV or backflow device. All Fire systems should have a Pressure Relief Valve.

B. Water Company Rules & Regulations require that all of the specifications are met and a meter is set before water service is turned on.

C. It is the CUSTOMER's responsibility to size the pressure reducing valve(s) to fit their flow needs. Two–stage reduction may be needed where there is a wide variation between the initial pressure and the reduced pressure. Parallel installation may be needed where there is a wide variation of reduced pressure requirements, where it is vital to maintain a continuous water supply, or other reasons for improved performance.

D. Each part must be NSF/ANSI 61 (Annex F & G) compliant. Entire unit must be NSF/ANSI 372 compliant.

rev. 06–07–13

AQUA	
"Open" Fire Lines 6" to 10"	
ck'd by: MJF	Plan No. F–3

APPENDIX – VII

VERTICAL BACKFLOW INSTALLATIONS

This diagram shows an approved vertical installation for a Double Check Detector Assembly (DCDA) on Class 1 and 2 "Closed" Fire Sprinkler Systems.

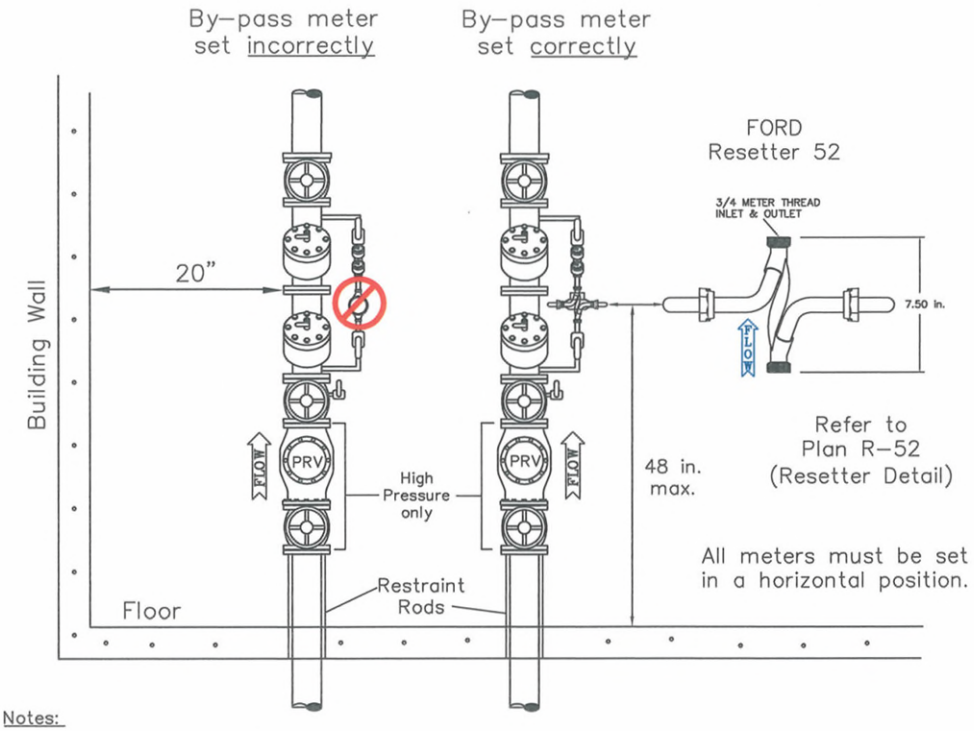

Notes:

A. Reduced Pressure Detector Assemblies (RPDA) are NOT approved for vertical installations. DCDA must be approved by the manufacturer for vertical installations.

B. RPZ & Vertical Installations are not approved in meter pits/vaults.

C. The Customer is required to have the meter resetter installed on all vertical backflow detector assemblies.

D. Water Company Rules & Regulations require that all of the specifications are met and a meter is set before water service is turned on.

E. It is the CUSTOMER's responsibility to size the pressure reducing valve(s) to fit their flow needs. Two–stage reduction may be needed where there is a wide variation between the initial pressure and the reduced pressure. Parallel installation may be needed where there is a wide variation of reduced pressure requirements, where it is vital to maintain a continuous water supply, or other reasons for improved performance.

F. Each part must be NSF/ANSI 61 (Annex F & G) compliant. Entire unit must be NSF/ANSI 372 compliant.

rev. 06–17–13

AQUA	
ck'd by: MJF	Plan No. BFV–1

APPENDIX – VIII

Pennsylvania DEP 25 -109 709
Cross-Connection Control Regulations Summary

Contrary to the belief of many public water suppliers in Pennsylvania, containment backflow protection is required on all service connections within a regulated public water supply distribution system.

Chapter 109.709 states that no person may introduce contaminants into the distribution system- The only way to ensure this protection is to install containment.

Chapter 109.709 also states that the customer is responsible to provide (pay for) the necessary equipment to ensure adequate containment protection and that an individual backflow Preventer shall be acceptable to the public water supplier. (meaning that containment protection is all that is required by this section)

Chapter 109.709 also states that if a customer does not comply with containment protection requirements, that customers water service shall be terminated after reasonable notice is given (usually 3 written notices)

Chapter 109.709 states that a public water supply must draft and implement a comprehensive cross-connection control program, at the "direction of the Department" *This is a section that causes much confusion because many water suppliers interpret this as meaning, "if the department doesn't tell me that I need to eliminate cross-connections in my system then I don't need to do it.* ***This section only refers to the cross-connection control program itself, all of the other requirements that focus on eliminating cross-connections by applying containment under chapter 109.709 and isolation under 109.608 still remain. The bottom line is that unprotected cross-connections are a clear violation of Chapter 109 and the Safe Drinking Water Act!***

Chapter 109.608 states that, " A public water supply may not be designed or constructed in a manner that creates a cross-connection" This really means that every treatment plant, sludge press and sludge processing facility, storage facility, pump station, and any other water system facility must have isolation protection on each cross-connection. Ironically many water treatment facilities have very poor cross-connection control practices.

Another point that relates to **109.608** is that under the definition in Chapter 109 of a public water supply system, the distribution system is part of the public water supply. Therefore, in order to comply with **109.608** the public water supplier must have containment protection present in order to protect the distribution from backflow contamination.

APPENDIX - IX

TABLE VII-3.1
RECOMMENDED BACKFLOW PREVENTION DEVICES

The following table outlines the recommended type of backflow prevention devices which should be installed for the protection of a community water supply. This is a partial list and is not intended to suppliant any ordinances or standards developed by a water company. Additional facilities requiring these types of devices can be found in Public Water Supply Manual- Part VII Cross Connection Control / Backflow Prevention. Table VII-2.1 Degree of Hazard

	PLANT or FACILITY	TYPE of DEVICE to be USED		
		Air Gap	RPZD	DCVA
1.	Aircraft and Missle Plants	X	X	
2.	Automatic Car Wash	X	X	
3.	Automated Manufacturing Plants	X	X	
4.	Auxilary Water Systems	X	X	
5.	Beverage Bottling Plants			X
6.	Breweries/Distillers	X	X	
7.	Chemical Plants	X	X	
	(Manufacturing, Processing, Compounding or Teatment)			
8.	Dairies and Cold Storage Plants		X	X
9.	Dye Works	X	X	
10.	Film Processing	X	X	
11.	Irrigation Systems	X	X	
	(Green House, Golf Cources, Playgrounds, Estates, Cemeteries, etc.)			
12.	Laboratories	X	X	
13.	Laundries		X	X
14.	Meat Packing and Reduction Plants	X	X	
15.	Metal Plating Plants	X	X	
16.	Paper and Paper Procucts (Wet Process)	X	X	
17.	Petroleum or Gas Processing or Storage Plants	X	X	
18.	Plating Plants	X	X	
19.	Power Plants	X	X	
	(Heating, Ventilating, Refrigeration, or Commercial Power)			
20.	Rubber Plants	X	X	
	(Natural or Synthetic, Mfg. Ruber Goods or Tires)			
21.	Sand and Graval Plant	X	X	
22.	Sewage or Stormwater Tratment/Processing Facility; Ejector or Pumping Station	X	X	
23.	Swimming Pools			X
24.	Water Front Facilities and Industries	X	X	
25.	Where a Cross connection is to be Maintained	X	X	
26.	Radioactive Materials or Substances, Processing Plants or Facilities Handling	X		
27.	Manufacturing, Processing, and Fabrication Plants Using Toxic Materials	X	x	
28.	Manufacturing, Processing, and Fabrication Plants Using Non-Toxic Materials			X

BUILDINGS

29.	Convalescent Home			X
30.	Medical Clinic	X	X	
31.	Medical/Dental Building	X	X	
32.	Multipurpose Commerical Building (Over 3 Stories)			X
33.	Office Building (Over 3 Stories)			X
34.	Hospitals	X	X	
35.	Home for the Aged			X
36.	Mortuary	X	X	
37.	Morgue	X	X	
38.	Nursing Home			X
39.	Elementart, High Schools, Trade schools, and Colleges			X
40.	Schools with Laboratories	X	X	
41.	Apartment and/or Hotel with Restaurant			X
42.	Apartment and/or Hotel (Over 3 Stories)			X
43.	Apartment and/or Hotel with Sewage Ejector	X	X	
44.	Apartment and/or Hotel with House Pump and/or Water Storage Tank			X
45.	Public building (Federal, State, City)			
	A. Potential Health Threat	X	X	
	B. Potential Pollution Threat			X
	C. Restricted/Classified or Closed Facilities	X	X	
46.	Restaurant (Any Food Handling Establishment)			X
47.	Supermarket			X
48	* Building with house pump and/or Water Storage Tank			X
49	* Building with Sewage Ejectors	X	X	
50	Blank			

*** Apply to any building regardless of building purpose**

APPENDIX – X

The Bureau of Water Supply and Community Health uses the AWWA Standard A 100-90 for abandonment of public water supply wells. This standard is referenced in Section 3.3.5.11 of Part II of the Public Water Supply Manual.

All abandoned wells shall be reported to BTGS, along with any bureau that requires a report, on forms required by BTGS (and any other forms). If available, the original driller's log should be included along with the details of the well abandonment procedure. A photograph should be taken of the site, and a reference map should be made to locate the abandoned well. It also may be appropriate to survey the exact location of the well. This is especially important for wells associated with contaminated sites.

AQUA WELL ABANDONMENT VERIFICATION

I, _____, the undersigned, in making application for water service to my property at _____ (which is presently supplied by either a well or spring, which I maintain), hereby agree that:

Circle one:

A. I will abandon my present water supply at the time that Aqua activates water service to my property.

I will notify the County Health Department of such abandonment and will comply with their Well Abandonment Requirements, and those of any other agencies having jurisdiction.

In the event that I would wish to reactivate my well, I will request the permission of Aqua prior to reactivating same. I will apply for the permit from the County Department of Health to reactivate our well. Once the County application is approved, I understand that I may not interconnect the piping between my well supply and Aqua's water supply. Furthermore, should Aqua permit reactivation of the auxiliary supply, I agree to install and maintain an approved backflow prevention device in accordance with Aqua's Rules and Regulations concerning Cross Connections.

OR

B. I wish to maintain my present water supply (well or spring). I will apply for the permit from the County Department of Health to continue to maintain our present well. Once the County application is approved, I understand that I must install and maintain an approved backflow prevention device in accordance with Aqua's Rules and Regulations concerning Cross Connections, and furthermore, understand that I may not interconnect the piping between the present supply and Aqua's water supply.

Applicant's Signature: _____ **Date:** _____

WELL ABANDONMENT REQUIREMENTS FOR AQUA

1. DISCONNECT *AND* REMOVE THE PUMP FROM PROPERTY.

2. DISCONNECT *AND* REMOVE TANK FROM PROPERTY.

3. DISCONNECT ELECTRIC LINE.

4. CUT PIPE FLUSH WITH WALL/FLOOR.

NOTE: All well abandonments must meet Local, County, State, & Federal Regulations

REV. 2/16/10

APPENDIX – XI

2021 International Plumbing Code (IPC)
Section 312
Testing and Inspections

312.10 Inspection and Testing of Backflow prevention assemblies.
Inspection and Testing shall comply with Sections 312.10.1 and 312.10.2

312.10.1 Inspections

Annual inspections shall be made of all backflow prevention assemblies and air gaps to determine whether the assemblies are operable and air gaps exist.

312.10.2 Testing

Reduced pressure principle, double check, pressure vacuum breaker, reduced pressure detector fire protection, and spill-resistant vacuum breaker backflow preventor assemblies and hose connection backflow preventers shall be tested at the time of installation, immediately after repairs or relocation and at least annually. The testing procedure shall be performed in accordance with one of the following standards: ASSE 5013, ASSE 5015, ASSE 5020, ASSE 5047, ASSE 5048, ASSE 5052, ASSE 5056, CSA B64.10 or CSA B64.10.1 Test gauges shall comply with ASSE 1064

APPENDIX – XII

AQUA

Aqua Pennsylvania
Cross-Connection Control
c/o PAWSC
P.O. Box 767
Pittston, PA 18640

BACKFLOW PREVENTION ASSEMBLY TEST & MAINTENANCE FORM

THIS FORM MUST BE COMPLETED BY AN ASSE-CERTIFIED TESTER

1. GENERAL INFORMATION

NAME OF FACILITY	SERVICE ADDRESS		SERVICE CLASS	
DEVICE LOCATION	HAZARD ID #	ACCOUNT NUMBER	METER #	
MANUFACTURER	MODEL	SERIAL NO.	SIZE	TYPE

2. TEST & REPAIR INFORMATION

	CHECK VALVE NO. 1	CHECK VALVE NO. 2	DIFFERENTIAL PRESSURE RELIEF VALVE	PRESSURE VACUUM BREAKER
INITIAL TEST	☐ LEAKED ☐ CLOSED TIGHT PRESSURE DROP ACROSS FIRST CHECK VALVE _____ PSID	☐ LEAKED ☐ CLOSED TIGHT PRESSURE DROP ACROSS SECOND CHECK VALVE _____ PSID	☐ OPEN AT _____ PSID ☐ DID NOT OPEN	☐ AIR NET OPENED AT _____ PSID ☐ DID NOT OPEN ☐ CHECK VALVE _____ PSID ☐ CHECK VALVE LEAKED
REPAIR				
FINAL TEST	☐ LEAKED ☐ CLOSED TIGHT PRESSURE DROP ACROSS FIRST CHECK VALVE _____ PSID	☐ LEAKED ☐ CLOSED TIGHT PRESSURE DROP ACROSS SECOND CHECK VALVE _____ PSID	☐ OPEN AT _____ PSID ☐ DID NOT OPEN	☐ AIR NET OPENED AT _____ PSID ☐ DID NOT OPEN ☐ CHECK VALVE _____ PSID ☐ CHECK VALVE LEAKED
REMARKS	CONDITION OF NO. 2 CONTROL VALVE ☐ CLOSED TIGHT ☐ LEAKED		LINE PRESSURE _____ PSIG	DATE _____ PASS DATE _____ FAIL

3. APPROVALS

"I Hereby Certify that this Data is Accurate and Reflects the Proper Operation and Maintenance of the Assembly."			
NAME OF CERTIFIED BACKFLOW TESTER (PRINT)	PHONE NUMBER	BUSINESS NAME	
TEST GAUGE SERIAL NUMBER		TEST GAUGE LAST CALIBRATION DATE	
INITIAL TEST	SIGNATURE OF INITIAL TESTER	CERTIFIED TESTER NUMBER	DATE
REPAIRS	SIGNATURE OF REPAIRER	CERTIFIED TESTER NUMBER (IF APPLICABLE)	DATE
FINAL TEST	SIGNATURE OF FINAL TESTER	CERTIFIED TESTER NUMBER	DATE

All testers must have current ASSE Certification. The tester is encouraged to submit the completed Backflow Prevention Assembly Test & Maintenance Report to Cross-Connection Control online at **AquaAmerica.TokayTest.com**

Witness: Todd Duerr
Date: 11/1/2021

AQUA PENNSYLVANIA, INC.
AQUA PENNSYLVANIA WASTEWATER, INC.

RESPONSE REQUEST
COMMISSIONER RALPH V. YANORA
PENNSYLVANIA PUBLIC UTILITY COMMISSION

DOCKET NOS. R-2021-3027385 & R-2021-3027386

---

3) Compliance materials of Aqua's operation and maintenance plans required by 25 Pa. Code §109.702 as they relate to adequate, safe, and reasonable service for utility customers and employees;

RESPONSE:

Aqua PA has an operation and maintenance plan required by 25 Pa. Code §109.702 as it relates to adequate, safe, and reasonable service for utility customers and employees. It was last updated November 2019. It will be updated in 2022 after the Company completes its requirements to update emergency response plans required by the American Water Infrastructure Act (due December 31, 2021 for certification of Group 3 systems). In addition to general updates, it will reflect acquired systems and updates related to other operating plans.

Witness: Todd Duerr
Date: 11/1/2021

AQUA PENNSYLVANIA, INC.
AQUA PENNSYLVANIA WASTEWATER, INC.

RESPONSE REQUEST
COMMISSIONER RALPH V. YANORA
PENNSYLVANIA PUBLIC UTILITY COMMISSION

DOCKET NOS. R-2021-3027385 & R-2021-3027386

---

4) The number of Aqua's commercial meters in the system, the number tested, and the number passed or failed for calendar year 2020;

RESPONSE:

At the end of 2020, Aqua PA had 23,139 meters installed at commercial premises within the service area. In 2020, 801 meters that were installed at commercial premises were removed and tested. 458 (57%) of those meters failed their testing based on flowrates and accuracy defined by ANSI/AWWA C-700 standard for new meters.

Witness: Todd Duerr
Date: 11/1/2021

AQUA PENNSYLVANIA, INC.
AQUA PENNSYLVANIA WASTEWATER, INC.

RESPONSE REQUEST
COMMISSIONER RALPH V. YANORA
PENNSYLVANIA PUBLIC UTILITY COMMISSION

DOCKET NOS. R-2021-3027385 & R-2021-3027386

---

5) The number of Aqua's valves exercised in calendar year 2020 and the frequency of valve maintenance;

RESPONSE:

Aqua PA has a critical valve testing program that was reviewed during our recent PUC Management Audit report. In this report it was noted that, Aqua PA has developed a strong base for its valve inspection program by focusing on critical valves.

In addition, the PUC Management Audit recommended that Aqua PA implement a full-scale valve inspection and exercise program designed to identify what valves have not been operated or inspected in the last ten years. In its response, Aqua PA agreed that non-critical valve inspection and exercising program is warranted, but respectfully had concerns with the suggested exercising frequency outlined in the report. As part of the implementation plan, Aqua PA agreed to engage a consultant to evaluate Aqua PA's water systems and develop a non-critical valve inspection and exercising program. This effort will consider such factors as standard operating procedures for inspection and exercising, valve operating frequency, the identification of routinely operated valves, and the resources necessary to complete same. This program will ensure that non-critical valves will be inspected and exercised on a level representing good industry practice. The exercising frequency will be included in the review by the consultant and Aqua PA will provide the recommended frequency in its next update report.

All critical valves have been identified in the Aqua GIS asset registry and will continue to be updated as as-builts are received. These valves currently have exercising schedules created and maintained in Aqua PA's work order management system (Maintenance Connection). These schedules will be transferred to SAP Plant Maintenance in January 2022 and continue to be maintained at the asset level to ensure compliance with critical valve requirement.

All non-critical valves have been identified in the Aqua GIS asset registry as well. An analysis has been completed to ensure the exercising of these valves is completed over a 12-year period. Internal staff used GIS analysis techniques to identify valve proximity to

major roadways to determine staffing requirements needed for traffic control measures. Operation staff are meeting to determine which non-critical valves are scheduled in year one, two, etc.

For further information, there were 129 isolation valves that were repaired during the calendar year 2020. As noted above, the Company does not currently have a program for operating valves based off frequency. The Company operates approximately 6,000 to 8,000 valves during it normal course of business which we estimate to be close to 10 percent of the valves in service each year. The program operates critical valves no less than once every four years. There are 270 valves in the program which began in 2017. The program is ongoing and can change from time to time depending on changes being made in the distribution system. Below is a count of the amount of valves that are in the system according to our GIS system for reference.

Valve Count as of 10/2021	**Total**
PA - Central	5,374
PA - Northeastern	6,322
PA - Southeastern	66,033
PA - Western	5,818
Grand Total	**83,547**

Witness: Todd Duerr
Date: 11/1/2021

AQUA PENNSYLVANIA, INC.
AQUA PENNSYLVANIA WASTEWATER, INC.

RESPONSE REQUEST
COMMISSIONER RALPH V. YANORA
PENNSYLVANIA PUBLIC UTILITY COMMISSION

DOCKET NOS. R-2021-3027385 & R-2021-3027386

---

6) The number of Aqua's commercial and industrial customers that have testable backflow prevention devices and the number of devices that were tested for calendar year 2020;

RESPONSE:

There are:

- 21,830 testable backflow devices installed on Commercial premises, and
- 920 testable backflow devices installed on Industrial premises

In 2020, Aqua PA recorded passable tests for:

- 15,573 devices installed on Commercial premises
- 643 devices installed on Industrial premises

Witness: Todd Duerr
Date: 11/1/2021

AQUA PENNSYLVANIA, INC.
AQUA PENNSYLVANIA WASTEWATER, INC.

RESPONSE REQUEST
COMMISSIONER RALPH V. YANORA
PENNSYLVANIA PUBLIC UTILITY COMMISSION

DOCKET NOS. R-2021-3027385 & R-2021-3027386

---

7) Aqua's tariff backflow prevention requirements regarding residential fire protection and irrigation and whether Aqua has a plan for inspection and testing of fire hydrants;

RESPONSE:

The Aqua PA Cross Connection Manual, provided in response to Question 2, defines the requirements for residential fire protection and irrigation accounts. All new residential fire protection and irrigation services are required to install testable backflow devices and those devices are required to be tested annually.

Witness: Todd Duerr
Date: 11/1/2021

AQUA PENNSYLVANIA, INC.
AQUA PENNSYLVANIA WASTEWATER, INC.

RESPONSE REQUEST
COMMISSIONER RALPH V. YANORA
PENNSYLVANIA PUBLIC UTILITY COMMISSION

DOCKET NOS. R-2021-3027385 & R-2021-3027386

---

9) Whether Aqua's residential customers have American Society of Sanitary Engineers 1024 backflow assemblies installed at meter locations;

RESPONSE:

Aqua Pennsylvania, Inc. Rules and Regulations require that all new customer connections to the Company's distribution system be equipped with backflow prevention, cross-connection-control or other special device approved by the Company and in accordance with the Company's specifications. At the Company's request, existing customer connections are required to install backflow prevention, cross-connection-control or other special device approved by the Company and in accordance with the Company's specifications

Please see the attachment Yanora-9 Attachment 1 for the Aqua PA Meter Installation Specifications, as it defines the requirements for all residential accounts. All residential services are required to install an ASSE 1024 backflow device. These installations are monitored throughout Aqua PA New Business activities and the device is confirmed as installed before the meter is set. Existing residential services are required to meet this standard when improvements are made to the property that require plumbing permits due to renovations and retrofits.

AQUA SM

METER INSTALLATION SPECIFICATIONS

Revised June 2015

TABLE OF CONTENTS

	Page / Plan #
Prelude	3
General Notes for Meter Installations	4
Notes for Meters Located in a Building	4
Notes for Meter Pits/Vaults	5
Notes for Backflow Devices	6
Definitions	6
Information for Plumbers and Builders	7-8
Theft of Service Form	9
Well Abandonment Verification Form	10
Application for Domestic Water Service Line	Form D-143
Application for Fire Water Service Line	Form D-144
Application for Joint Domestic/Fire Water	Form D-145
Meter Box Single Yoke for 3/4" or 1" piping	MB-1
Meter Box Twin Yoke for 3/4" or 1" piping	MB-2
Meter Box Triple Yoke for 3/4" or 1" piping	MB-3
Meter Box Twin Yoke Setter Detail - 3/4" or 1"	MBY-2
Custom Setter Single for 1.5" & 2" Domestic (PRV or Meter or BF)	CSD-1-H
Custom Setter Double for 1.5" & 2" Domestic (PRV & Meter or BF & Meter)	CSD-2
Custom Setter Triple for 1.5" & 2" Domestic (PRV, Meter, & BF)	CSD-3
Custom Setter Single for 1", 1.5" & 2" Fire (BF w/meter)	CSF-1
Custom Setter Double for 1.5" & 2" Fire (PRV & BF w/meter)	CSF-2
Custom Setter for 1.5" or 2" Fire & 3/4" or 1" Domestic	CSFD-1
Custom Setter for 1.5" or 2" Fire & 3/4" or 1" Domestic w/PRV	CSFD-2
Domestic Service Piping Details and Notes:	
• 5/8" thru 1"	D-1
• 1.5" and 2"	D-2
• 3" and Larger	D-3
• Single Service Pit Dimensions (Domestic)	D-4
• Single Service Pit Calculations (Domestic)	D-5
Fire Service Piping Details and Notes:	
• 1" thru 2"	F-1
• 4" thru 10" - Closed System	F-2
• 4" thru 10" - Open System	F-3
• Single Service Pit Dimensions (Fire)	F-4
• Single Service Pit Calculations (Fire)	F-5
Dual Service Pit Dimensions	DS-1
Access Door Details	P-1
Pipe Support Detail	P-2
Anchor / Blocking Details for Building	P-3
DCDA - Vertical Installations	BFV-1
Resetter Detail	R-52

PRELUDE

The purpose of this booklet is to provide clear, concise information pertaining to the piping requirements for meter arrangements within Aqua's service area(s) listed below. We welcome your communication. For additional information, please contact Field Operations in your area at the following numbers:

STATE - PENNSYLVANIA

Operating Division: **Southeastern** 700 W. Sproul Road, Springfield, PA 19064
Phone: (610) 541-4160 Fax: (610) 328-9549
County: Delaware, Montgomery, Chester, Bucks, Berks

Operating Division: **Roaring Creek** 204 E. Sunbury St., Shamokin, PA 17872-0909
Phone: (570) 648-5783 Fax: (570) 648-0354
County: Adams, Columbia, Cumberland, Juniata, Northumberland, Schuylkill, Snyder

Operating Division: **Susquehanna** 206 Keystone Ave., Sayre, PA 18840
Phone: (570) 882-8695 Fax: (570) 888-9589
County: Bradford

Operating Division: **White Haven** 1 Aqua Way, White haven, PA 18661
Phone: (570) 443-7099 Fax: (570) 443-9784
County: Lackawanna, Luzerne, Susquehanna, Northampton, Lehigh, Schuylkill, Monroe, Wyoming

Operating Division: **Honesdale** 1775 North Main St., Honesdale, PA 18431
Phone: (570) 647-0358 X-13 Fax: (570) 647-0580
County: Pike, Wayne, Lackawanna, Monroe

Operating Division: **Shenango Valley** 665 S. Dock St., Sharon, PA 16146
Phone: (724) 981-1200 X-50714 Fax: (724) 981-2446
County: Mercer, Lawrence, Venango, Forest, Crawford, Warren, Clearfield

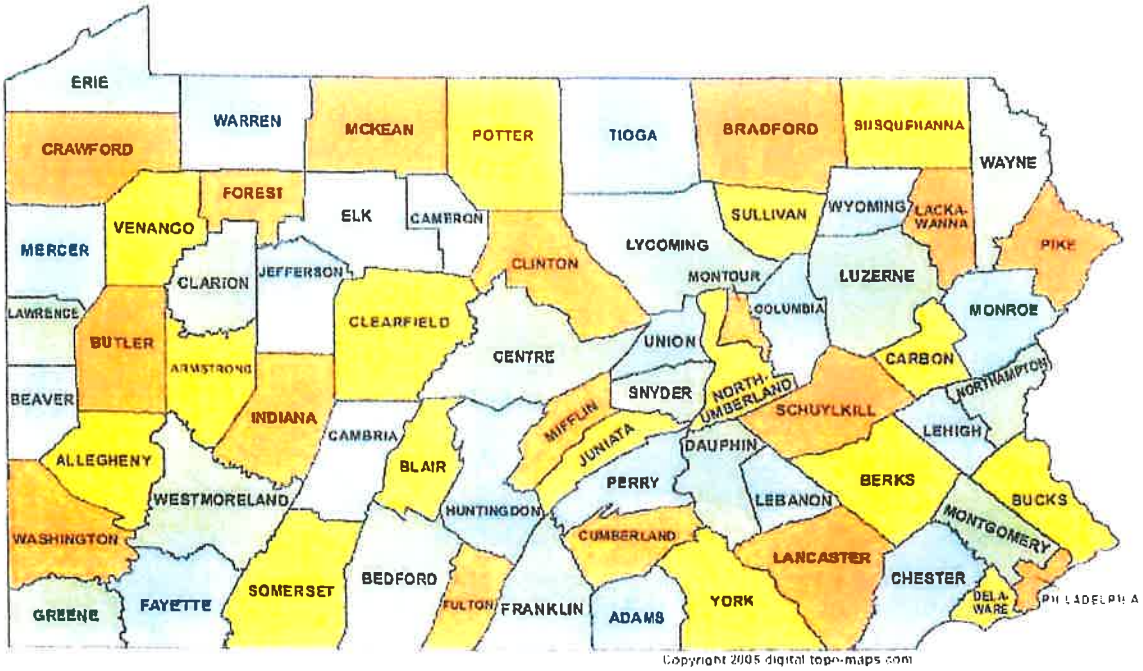

GENERAL NOTES FOR METER INSTALLATIONS

1. Water meters shall be joined to the service pipe with:
   - Meter couplings for meters 5/8" to 1" (provided by the Company).
   - Flanges (2-holed, bronze, heavy) for meters 1 ½" and 2".
   - Flanges for 3" to 10".
2. **SERVICE PIPE :**
   - ¾" to 2" diameter service pipe shall be "K"-copper, meeting ASTM B88.
   - 3" and larger diameter service pipe shall be Class 53 (min.) ductile iron, cement lined w/ tar coating in accordance with ANSI/AWWA C115/A21.15.
3. **FLANGES** (oval) shall be used as companion flanges for 1 ½" and 2" meters. Flanges shall be made of bronze and shall be drilled, faced, and tapped in conformance with ANSI B2.1. Flange dimensions shall conform to AWWA C700.
4. **FLANGED FITTINGS** shall be ductile iron, cement lined w/ tar coating, and conform to the applicable requirements for ductile iron fittings specified in ANSI/AWWA C110/A2.10.
5. **FLANGES** of both ductile iron and flanged pipe and fittings shall be adequate for water service of 175 PSI working pressure, or higher depending on street pressure. The bolt circle and holes of the flanges shall match those of the class 125 flanges shown in ANSI B16.1.
6. **NUTS AND BOLTS** shall be in accordance with ASTM std. A193-B7 and A194, grade 4.
7. **GASKETS** shall be 1/8" thick full-faced rubber gaskets meeting the requirements of ANSI/AWWA C111/A2.11 mechanical joint gaskets. Approved gaskets are 1) Toruseal Flange Gaskets (SBR & EPDM); 2) U.S. Pipe Flange Gaskets.
8. **VALVES**, 3" and larger, shall be rated 200 psi working pressure (or higher depending on street pressure) and shall be in accordance with AWWA C500. Valves to ***open left***, have resilient seats (RS), and have outside screw and yoke (rising stem).
9. Tees, valves, and other fixtures must be supported by adjustable pipe supports and remain supported and stable with or without a meter / meter spacer in place.
10. All meters and meter strainers to be supplied, maintained, and owned by the Company.
11. All meters must be set level in a horizontal plane.
12. On domestic services, 1 ½" and larger, a by-pass is required, except for lines dedicated strictly for irrigation. The Company will determine other exceptions. Backflow devices shall not be by-passed.
13. All material must be domestically manufactured.

NOTES FOR METERS LOCATED IN A BUILDING

1. Expansion couplings not required.
2. For domestic meters, the by-pass line should be installed on the wall-side and parallel to the meter, or directly above or below the meter.
3. The meter and/or backflow device are not permitted within a closet, crawl space (**minimum 7 ft. clearance**), garage, unheated area, or any enclosure not approved by the Company. **Adequate access to the meter and backflow device (including valves, fittings, and fixtures) must be maintained at all time.**
4. When two service lines are laid parallel inside a building, a 4-foot minimum distance between the centerline of the pipes is required.
5. Properly sized floor drains must be located near meters and backflow devices.
6. ***For existing premises, a meter box/vault is required when existing circumstances change including, but not limited to:***
   a) Building renovations (including knock-down/re-builds)
   b) Renewal or repair of service line

NOTES FOR METER BOX / VAULTS

In general, meter box/vaults are to be installed on the property being served and in an off-street location within 35 ft. of the property line. See note #5.

1. All meter vaults shall be pre-cast and designed for H-20 loading. Segments shall be keyed, and their joints and all penetrations watertight.
2. Concrete shall consist of Portland cement that conforms to ASTM C150, and aggregates that conform to ASTM C33. The minimum compressive strength shall be 4000 psi.
3. Reinforcing steel shall conform to ASTM A615 grade 60 for bars or ASTM A185 for welded wire fabric.
4. Sump hole, 12 in. x 4 in. deep, to be provided.
5. Meter pit/vault locations **must be approved prior to** installation.
6. **The location of the meter box /vault shall be subject to the express approval of the Company; in most cases, Meter box/vault shall be located inside the property line by the Customer** (outside the street/road and/or Company right-of-way) of the structure to be served with the inlet side of pit abutting the property line closest to the tap location. The customer's service line should be connected directly to the Company's service line and continue directly into the meter pit. No bends are allowed prior to the meter pit except for elevation differences.
7. Meter box/vault is to be located in grass or sidewalk area, which will not be subject to vehicular loading. Bollards or curbing must be installed around meter box/vault if it is installed in a paved or traffic area.
8. All access doors to be Bilco aluminum, single or double-leaf type J-4AL, channel frame w/ stainless steel hardware throughout, or equal.
9. All doors to be centered over the meter.
10. Meter box/vault is to be set between 1 in. and 4 in. above finished grade in grass area and grade to be sloped to divert water away from box/vault.
11. Any alterations to a new or existing box/vault must be approved prior to construction or change.
12. When a concrete vault is used, a 10 foot wide (min.) paved surface from the road to the vault, including curb depression, must be provided and maintained for vehicle access.
13. Truck access to the vault must be maintained at all times (e.g. rain, snow, etc.).
14. Reduced pressure backflow devices are not permitted below grade.
15. **For new construction, the meter shall be required to be to be installed outside the building in a meter box/vault.** *ALL meter box/vaults must meet the Company's specifications & approval.*
    For existing premises and circumstances, subject to the Company's approval, a meter may be set within the structure to be served, at a location approved by the Company, after the Customer has had the plumbing arranged (including the installation of special devices if required by the Company) to receive the meter at a convenient point inspected and approved by the Company so as to control the entire supply of water to the property.
    For existing premises, a meter box/vault is required ***when existing circumstances change*** *including, but not limited to:*
    c) Building renovations (including knock-down/re-builds)
    d) Renewal or repair of service line

NOTES FOR BACKFLOW DEVICES

1. All backflow assemblies to be supplied, maintained, owned, and installed by the Customer.
2. Backflow devices should be sized hydraulically, taking into account both the volume requirements of the service and the pressure drop through the assembly. The pressure loss through the assembly is not necessarily directly proportional to the flow. Refer to manufacturer head loss pressure curves.
3. When a backflow device is being installed retroactively on an existing domestic or fire system, a thorough hydraulic analysis, including revised hydraulic calculations, new fire flow data, and all necessary system notification to accommodate the additional friction loss should be performed prior to the installation of the device and be approved by the customer's insurance underwriters.
4. No By-pass will be allowed around backflow prevention devices. Where continuous, uninterrupted water service is desired, two devices may be installed in parallel. Parallel installation permits testing and maintenance of each individual backflow preventer without total service interruption. When two backflow preventers are used in parallel, the total rated capacity of the devices must equal or exceed the capacity of the main feed line.
5. Reduced Pressure Assembly (RP) and Reduced Pressure Detector Assembly (RPDA) backflow preventers SHALL NOT be installed in a pit below ground level.
6. It is the responsibility of the Customer to have all backflow prevention devices tested by a Company approved certified "tester" at the time of installation and annually thereafter.
7. Backflow devices must be installed downstream of the meter & before any branch or connections.
8. All backflow prevention assemblies must be purchased & installed with manufacturer approved resilient seated inlet and outlet control valves and as a complete package unit.
9. **TYPE 2 backflow assembly devices are acceptable.**
10. Required approvals for all devices: UL or C-UL classified, FM approved, ASSE/ANSI.
11. Each part must be NSF/ANSI 61, Annex F & G compliant.
12. Entire unit must be NSF/ANSI 372 compliant.
13. All backflow prevention assembly valves on the DOMESTIC and FIRE lines must be:
    - **FOR SIZES 2" & smaller** = Threaded, Full-port ball valve.
      Optional for FIRE only: UL/FM gear operated butterfly valves w/tamper switch may be used.
      *** The type of valve and/or tamper switch is governed by the local Fire authority ***
    - **FOR SIZES 3" & larger** – Flanged, OS&Y with resilient seat.
      Optional for DOM and/or FIRE: Grooved connections between device & valves are allowed.
      Optional for FIRE only: Grooved outlet connection on outlet valve is allowed.

REMINDER: ***All fittings are to be properly supported, so meter can be removed/serviced.**
***ALL pipe/fittings (3" & larger) must have solid flanges up to and including the backflow device; this includes the inlet flange entering the building or pit.**

DEFINITIONS

OPEN FIRE SYSTEM: Any fire system, supplied directly by the Company, that includes appurtenances to the system such as private fire hydrants, reservoirs or holding tanks that require or permit the flow of water for storage for future fire fighting purposes, or fire fighting training, etc. in such a volume, that the Company would require and install a full flow meter.
CLOSED FIRE SYSTEM: Any fire system, supplied directly by the Company, that includes only automatic sprinkler, standpipe or other automatic fire service devices. A closed system does not include private fire hydrants, reservoirs, or holding tanks of any size or construction.
DOMESTIC SERVICE: Any service other than fire, supplied directly by the Company, which includes residential, commercial and industrial customers.

IMPORTANT INFORMATION FOR PLUMBERS AND BUILDERS

1. Service Lines, Mains, and Equipment:

• The Company will make all connections to its mains and furnish, install, and maintain the service lines from the water main to and including the curb stop and box, which under normal circumstances will be placed inside the curb line.

• The Company's service line will be the property of the Company and under its control.

• The Company reserves the right to determine the size, kind, and location of the service line from the main to the curb, and from the curb to the property to be served.

2. Customer's Installation & Maintenance of Service Lines:

The service line from the curb stop to the property shall be furnished, installed, owned, and maintained by the owner of the property.

3. Location of Customer's Service Lines:

• The customer's service line shall not cross intervening properties unless there is no other way in which service can be provided due to the property being landlocked and an appropriate easement is obtained by the customer for the customer.

• The customer's service line shall be laid in a straight line at a right angle to the curb line (where possible) within the building limits of the structure to be served and at least four feet (4') below the surface of the ground in property owned by the customer, in fee simple absolute.

• No service line shall be laid in the same trench with a gas line, electric line, drain or sewer line, or any other facility of another public service company, nor within four feet (4') of any open excavation, retaining wall or vault.

4. Type of Piping Installed by Customer:

• Type "K" copper shall be used throughout for service lines up to and including two in. (2") in diameter. Compression or flared fittings shall be used for underground connections; sweat or threaded joints shall be used in buildings and pits.

• Service lines three inches (3") in diameter and larger shall be cement lined ductile iron pipe.

• The minimum diameter of pipe used for domestic services (curb to building) shall be 3/4 of an inch.

5. Meters:

• All meters will be furnished and installed by the Company and will remain the property of the Company and be accessible to and subject to its control.

• The Company reserves the right to determine the size, type and location of the meter to be installed in the customer's property, including whether such meter will be manually read, remotely read from outside the building, or read automatically using TV cable, telephone or similar lines and/or radio signal communications. As a condition of providing service, the Company shall have the right to install such equipment, connections and wiring in the manner and location it deems appropriate. Said equipment will remain the property of the Company.

6. Location of Meters within a Building:

• The customer shall provide a location for the meter within two feet (2') from the point-of-entry of an exterior foundation to a building, which affords its protection and allows access for reading and maintenance.

• The meter location shall not be within a closet, crawlspace (7 ft. minimum needed), garage, certain enclosures, or unheated areas.

7. Control Valves:

• Control valves shall be placed by the customer on the service line as shown on the piping detail plans.

• Full-port ball valves shall be used for service lines two-inches (2") in diameter and smaller.

• O.S. &Y. gate valves with resilient-seat shall be used for Domestic and Fire service lines three inches (3") in diameter and larger.

8. Conditions Requiring Meter Pit Installation by Customer:

- **<u>For new construction</u>, the meter shall be required to be to be installed outside the building in a meter box/vault.** *ALL meter box/vaults must meet the Company's specifications & approval.*
- **<u>For existing premises and circumstances</u>,** subject to the Company's approval, a meter may be set within the structure to be served, at a location approved by the Company, after the Customer has had the plumbing arranged (including the installation of special devices if required by the Company) to receive the meter at a convenient point inspected and approved by the Company so as to control the entire supply of water to the property.

  For existing premises, a meter box/vault is required when existing circumstances change including, but not limited to:

  a) Building renovations (including knock-down/re-builds)
  b) Renewal or repair of service line

9. Pressure Reducing Valves:

A pressure reducing valve (PRV) is required where the Company's system pressure exceeds 80 PSI on all domestic services, 100 PSI on residential fire services, 150 PSI on non-residential fire services, and at the discretion of the Company where it is believed that the pressure may exceed the above limitations. Said valve shall be designed and installed by the customer on the inlet side of the meter and follow all piping specifications by Aqua and the manufacturer.

10. Pipe Joints, Fittings, and Fixtures:

• When solder or flux are used for joining pipe and fittings, compliance with the Safe Drinking Water Act Amendment of 1986, Section 1417, shall apply.

• Likewise, all faucets and fixtures must be lead-free and in compliance with Federal, State, and local laws and codes.

11. Cross-Connection Control (backflow protection) or Special Devices:

If, in the Company's opinion, an approved backflow prevention device or other special device is necessary to prevent possible contamination of the water supply, the Company may require the customer to install and maintain such device(s) at a location and in a manner approved by the Company.

12. Activation of Service:

• The Company will install the meter and turn-on the service after the customer has the plumbing arranged (including all required fixtures) to receive the meter at a point approved by the company, so as to control the entire supply.

• PA Law (Criminal Code 18 Pa. C.S.A., Section 3926) prohibits the activation of a public utility without a measuring device (water meter).

NOTICE TO CONSUMERS, BUILDERS & PLUMBERS

Aqua requires that all domestic and fire services, including those used for construction sites, have a water meter installed *prior to activation of service.*

Pennsylvania Law (Criminal Code 18 Pa.C.S.A. §3926) prohibits the activation of a public utility service Line without a measuring device (water meter). Any person who activates a service without a meter violates the Section 3926:

3926. Theft of Services.

a. Acquisition of services. –

(1) A person is guilty of theft if he intentionally obtains services for himself or for another which he knows are available only for compensation, by deception or threat, by altering or tampering with the public utility meter or measuring device by which such services are delivered or by causing or permitting such altering or tampering, by making or maintaining any unauthorized connection, whether physically, electrically or inductively, to a distribution or transmission line, by attaching or maintaining the attachment of any unauthorized device to any cable, wire or other component of an electric, telephone or cable television system or to a television receiving set connected to a cable television system, by making or maintaining any unauthorized modification or alteration to any device installed by a cable television system, or by false token or other trick or artifice to avoid payment for the service. (Amended 1984)

Section 3926 allows for graded sentencing under Section 3903 where theft of service exceeds $50.00, and for repeated offenders, which may include fines and jail time.

3306. Unauthorized Use or Opening of Fire Hydrants.

Whoever opens for private usage any fire hydrant, without authorization of the Water Authority or Company having jurisdiction over such fire hydrant, commits a summary offense.

PLEASE NOTE AQUA WILL PROSECUTE TO THE FULLEST EXTENT OF THE LAW

To activate the water service, either for a new customer or for the intention of construction water (e.g. tool, truck or street washing and/or landscaping), please contact Customer Service @ 1-877-987-2782. Please provide the following information:

Company name _____ Contact person _____

Billing address _____ Phone number _____

_____

Date necessary to have the meter set to activate the service _____

Street address where the meter will be set. _____

I, the undersigned, have read and understand this notification of the Company's Policy on theft of service. By signing this form, I am aware of my responsibilities, and agree to comply with all of the terms of this Policy.

Applicant's Signature: _____

Print Name: _____ Date: _____

AQUA WELL ABANDONMENT VERIFICATION

I, _____, the undersigned, in making application for water service to my property at _____ (which is presently supplied by either a well or spring, which I maintain), hereby agree that:

Circle one:

A. I will abandon my present water supply at the time that Aqua activates water service to my property.

I will notify the County Health Department of such abandonment and will comply with their Well Abandonment Requirements, and those of any other agencies having jurisdiction.

In the event that I would wish to reactivate my well, I will request the permission of Aqua prior to reactivating same. I will apply for the permit from the County Department of Health to reactivate our well. Once the County application is approved, I understand that I may not interconnect the piping between my well supply and Aqua's water supply. Furthermore, should Aqua permit reactivation of the auxiliary supply, I agree to install and maintain an approved backflow prevention device in accordance with Aqua's Rules and Regulations concerning Cross Connections.

OR

B. I wish to maintain my present water supply (well or spring). I will apply for the permit from the County Department of Health to continue to maintain our present well. Once the County application is approved, I understand that I must install and maintain an approved backflow prevention device in accordance with Aqua's Rules and Regulations concerning Cross Connections, and furthermore, understand that I may not interconnect the piping between the present supply and Aqua's water supply.

Applicant's Signature: _____ **Date:** _____

WELL ABANDONMENT REQUIREMENTS FOR AQUA

1. **DISCONNECT *AND* REMOVE THE PUMP FROM PROPERTY.**
2. **DISCONNECT *AND* REMOVE TANK FROM PROPERTY.**
3. **DISCONNECT ELECTRIC LINE.**
4. **CUT PIPE FLUSH WITH WALL/FLOOR.**

NOTE: All well abandonments must meet Local, County, State, & Federal Regulations

REV. 2/16/10

AQUA APPLICATION FOR DOMESTIC WATER SERVICE LINE

A. Applicant:
Name: _____
Company Name: _____
Address: _____
City, State, Zip: _____
Phone: _____
E-mail: _____
( ) Builder ( ) Owner ( ) Plumber ( ) Other

B. Location of Proposed Service:
Address: _____
City, State, Zip: _____
Municipality: _____
County: _____
For developments, attach a separate page with street addresses and lot numbers.

C. Customer Billing Address:
If blank, applicant will be billed.
Name: _____
Company Name: _____
Address: _____
City, State, Zip: _____
Phone: _____
Email: _____

D. Status of service: (check all that apply)
( ) New ( ) Temporary
( ) Increase in Size ( ) Relocation
( ) Well Conversion

E. Type of Occupancy: (check all that apply)
( ) Residential ( ) Commercial
( ) Industrial ( ) Public ( ) Other
If not residential, describe nature of business:
_____
_____

F. Requested Size of Service: ( ) 1" ( ) 1.5" ( ) 2" ( ) 4" ( ) 6" ( ) 8" ( ) 10"

G. Anticipated Demand: _____ gpm (Std. Residential Demand = 20 gpm)
Will water service be utilized for a heating system? ( ) Yes ( ) No If NO, type of heat _____

H. Fixtures to be served by water service line: Specs and quantity of each unit (e.g.: 2 water closets, tank type, 1.6 gal/flush)

1._____ 3._____ 5._____

2._____ 4._____ 6._____

I. Irrigation System Data: ( ) Yes ( ) No Anticipated system demand ( ) gpm for irrigation only.

- If "yes", a backflow device is required on the service or branch line that feeds the irrigation system.
- If "yes", make certain that the demand stated in Category G of this application reflects the combined demand of the domestic and irrigation systems.

/ill a fire protection system be installed within the property? ( ) Yes ( ) No

- If a fire service will be required to service an automatic sprinkler system, standpipe, and/or fire hydrants, a separate service line will be required. Contact the Company for the proper application forms.

* * * *

AQUA APPLICATION FOR FIRE WATER SERVICE LINE

( ) Multi-Residential, Commercial, Industrial and Public ( ) One and two-family Residential

A. Applicant:

Name: _____
Company Name: _____
Address: _____
ity, State, Zip: _____
Phone: _____
E-mail: _____
( )Builder ( )Owner ( )Plumber ( )Sprinkler Contractor ( )Other

B. Location of Proposed Service

Address: _____
City, State, Zip: _____
Municipality: _____
County: _____
For developments, attach a separate page with street addresses and lot numbers.

C. Customer Billing Address:

If blank, applicant will be billed.

Name: _____
Company Name: _____
Address: _____
City, State, Zip: _____
Phone: _____
Email: _____

D. Status of service: (check all that apply)

( ) New ( ) Temporary
( ) Increase in Size ( ) Relocation

E. Type of Occupancy: (check all that apply)

( ) Residential ( ) Commercial
( ) Industrial ( ) Public ( ) Other

F. The fire sprinkler system design and installatior details have been prepared and approved by the following registered professional engineer or NICET representative (Level III or IV):

Name (print):_____Registration/Certification No.:_____
Company Name: _____
Address: _____City:_____State: _____

G. It is understood that I must design, install, own, and maintain a separate service line to be used exclusively for firefighting purposes from the curb valve to the building including all fixtures required by the Company. The domestic service line cannot be utilized to provide service to any part of the fire system including tank and/or pump type systems fed by a hose connection or any other type of fixture which is part of the domestic system. I acknowledge that the Company is not responsible for the sizing of either the Company's or Customer's service line from the main to the curb, as well as the line to the building. The Company is not responsible, nor liable, for determining the adequacy of flow and pressure to meet the fire system needs.

- I request that the Company install a fire service connection and lateral, which originates from the Company's main and terminates at the curb, to be **( ) 1" ( ) 1.5" ( ) 2" ( ) 4" ( ) 6" ( ) 8" ( ) 10"** in diameter.
  Total maximum water requirements including allowance for inside hose stream, hydrants and sprinkler system is ( ) gpm.
  o have fire hydrants beyond the meter: ( ) Yes ( ) No Quantity of hydrants beyond the meter _____
- To contain antifreeze or other inhibitor: ( ) Yes ( ) No
- The fire connection size (other than one and two-family residential lines) will determine monthly rate charge for the fire service.
- One and two-family Residential services will follow the Company's rate schedule for "Residential Multiple Meter Sets".

H. I understand and agree to install a Company approved backflow prevention device on the fire service line at an approved location before any branch line or outlet as specified in the Company's Manual of Cross-Connection Control.

****

I expressly agree for myself, my successors, and assigns, to release, defend, and indemnify the Company from any and all responsibility and liability resulting from the inaccurate sizing of the fire service line and connection, the inadequacy of design of the system, damage as the result of introducing antifreeze into the system, and improper installation, utilization and maintenance of the system.

In accordance with Rule 18 of the Company's Rules and Regulations for Company service, the cost of any Company service line in excess of the applicable maximum Company investment shall be paid by the Customer, plus all applicable taxes including income taxes occasioned by the contract. Any amount paid by the Customer shall not be subject to refund. The Company may require payment of the estimated amount of such excess cost in advance of the installation and will make a partial repayment to the extent the actual cost is determined to be less than the estimate.

I HAVE READ AND UNDERSTAND THE RULES AND REGULATIONS OF THE COMPANY LOCATED AT:
https://www.aquaamerica.com/media/29692/pa_water_tariff_10.2015.pdf
AND FURTHER UNDERSTAND THAT A METER BOX / VAULT IS REQUIRED FOR ALL SERVICE LINES

Aqua requires that all domestic and fire services, including those used for construction sites, have a water meter installed *prior to activation of service.* Pennsylvania Law (Criminal Code 18 Pa.C.S.A. 3926) prohibits the activation of a public utility service line without a measuring device (water meter). Any person who activates a service without a meter violates the Section 3926.

I. Applicant Signature: _____**Date:**_____

This application is valid for one (1) year from date approved.

********** **FOR COMPANY USE ONLY** **********

Serial No. _____ Tap Size _____ Meter Size _____in. Pressure _____
Tapped on _____ in. pipe Ext. No. _____ Plan No._____ Plate No._____
Required items: Meter pit ( ) Yes ( ) No Pressure Reducing Valve ( ) Yes ( ) No Backflow device ( ) Yes ( ) No

Company Representative: _____ Date: _____

Expiry Date of Application: _____ FORM D-144 REVISED 6-16-2016

AQUA APPLICATION FOR RESIDENTIAL JOINT DOMESTIC & FIRE WATER SERVICE LINES

(One and Two Family Residential Dwellings)

A. Applicant:

Name: _____

Company Name: _____

Address: _____

City, State, Zip: _____

Phone: _____

E-mail: _____

( ) Builder ( ) Owner ( ) Plumber ( ) Sprinkler Contractor ( ) Other

B. Location of Proposed Service

Address: _____

City, State, Zip: _____

Municipality: _____

County: _____

For developments, attach a separate page with street addresses and lot numbers.

C. The fire sprinkler system design and installation details have been prepared and approved by the following registered professional engineer or NICET representative (Level III or IV):

Name (print): _____ Registration/Certification No.: _____

Company Name: _____

Address: _____ City: _____ State: _____

D. It is understood that I must design, install, own, and maintain a separate service line to be used exclusively for firefighting purposes from the curb valve to the building including all fixtures required by the Company. The domestic service line cannot be utilized to provide service to any part of the fire system including tank and/or pump type systems fed by a hose connection or any other type of fixture which is part of the domestic system. I acknowledge that the Company is not responsible for the sizing of the joint domestic and fire service line from the main to curb, as well as the individual domestic and fire services from curb valves to the building. The Company is not responsible, nor liable, for determining the adequacy of flow and pressure to meet the fire system needs.

I am applying to the Company for a residential joint domestic and fire service **(main to curb only)** to the aforementioned building.

- I request that the Company install a single service connection and lateral, which originates from the Company's main to the curb to be: **( ) 1"** **( ) 1.5"** **( ) 2"** in diameter based upon a **combined FIRE and DOMESTIC demand** of **( )** gpm.
- I also request that the following size service connections be provided at the curb valve:
  Fire service connection: **( ) 1"** **( ) 1.5"** **( ) 2"**
  Domestic service connection: **( ) 1"** **( ) 1.5"** NOTE: The Company shall establish the domestic meter size.
- Total maximum water requirements including allowance for inside hose stream, hydrants and sprinkler system is ( ) gpm.
- To contain antifreeze or other inhibitor: ( ) Yes ( ) No.

One and two-family Residential services will follow the Company's rate schedule for "Residential Multiple Meter Sets".

E. I understand and agree to install a Company approved backflow prevention device on the fire service line at an approved location before any branch line or outlet as specified in the Company's Manual of Cross-Connection Control.

****

I expressly agree for myself, my successors, and assigns, to release, defend, and indemnify the Company from any and all responsibility and liability resulting from the inaccurate sizing of the fire service line and connection, the inadequacy of design of the system, damage as the result of introducing antifreeze into the system, and improper installation, utilization and maintenance of the system.

In accordance with Rule 18 of the Company's Rules and Regulations for Company service, the cost of any Company service line in excess of the applicable maximum Company investment shall be paid by the Customer, plus all applicable taxes including income taxes occasioned by the contract. Any amount paid by the Customer shall not be subject to refund. The Company may require payment of the estimated amount of such excess cost in advance of the installation and will make a partial repayment to the extent the actual cost is determined to be less than the estimate.

I HAVE READ AND UNDERSTAND THE RULES AND REGULATIONS OF THE COMPANY LOCATED AT:

https://www.aquaamerica.com/media/29692/pa_water_tariff_10.2015.pdf

AND FURTHER UNDERSTAND THAT A METER BOX / VAULT IS REQUIRED FOR ALL SERVICE LINES

Aqua requires that all domestic and fire services, including those used for construction sites, have a water meter installed *prior to activation of service.* Pennsylvania Law (Criminal Code 18 Pa.C.S.A. 3926) prohibits the activation of a public utility service line without a measuring device (water meter). Any person who activates a service without a meter violates the Section 3926.

F. Applicant Signature: _____ Date: _____

This application is valid for one (1) year from date approved.

********** **FOR COMPANY USE ONLY** **********

Serial No. _____ Tap Size _____ Meter Size _____ in. Pressure _____

Tapped on _____ in. pipe Ext. No. _____ Plan No. _____ Plate No. _____

Required items: Meter pit ( ) Yes ( ) No Pressure Reducing Valve ( ) Yes ( ) No

Backflow device ( ) Yes ( ) No Res. Dual Check Valve ( ) Yes ( ) No

Company Representative: _____ Date: _____

Expiry Date of Application: _____

FORM D-145 REVISED 6-16-2016

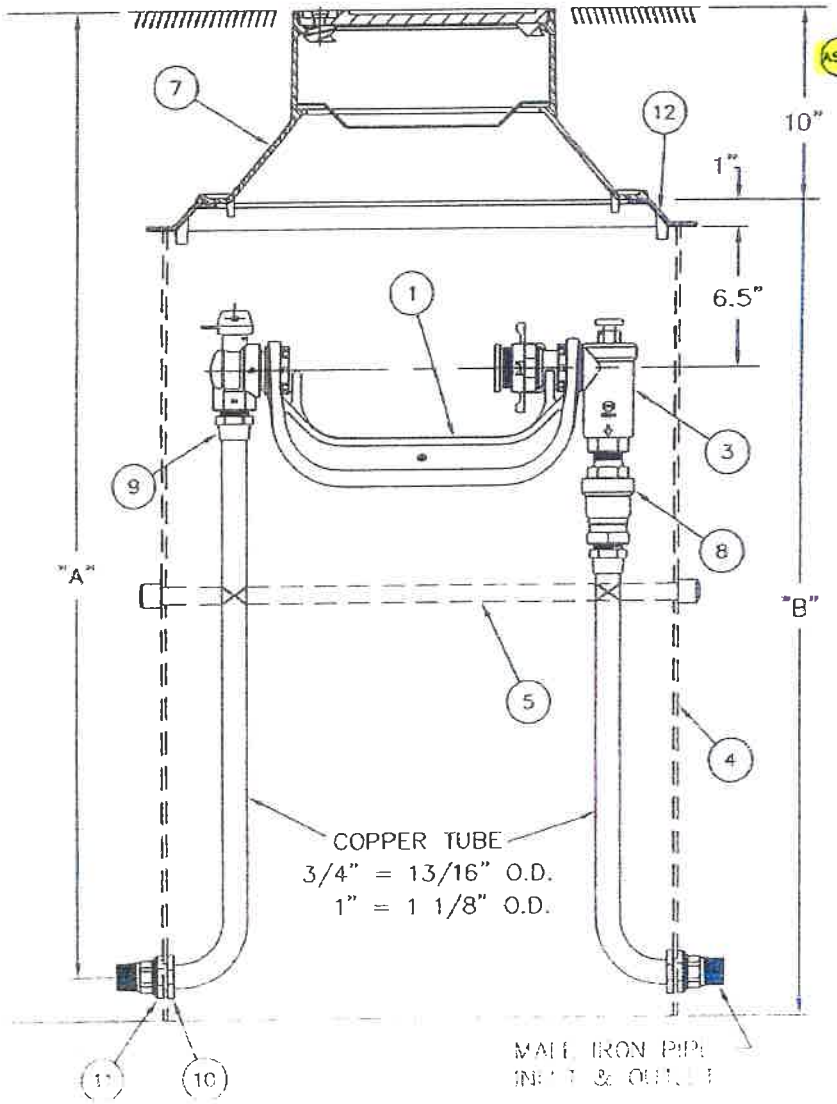

NO.	ITEM	QTY.	3/4" DWG or P/N	1" DWG or P/N
1	TWIN YOKE BAR	1	Y503	Y504
2	FULL-PORT ANGLE BALL VLV	1	BA91-323-W-NL	BA91-444-W-NL
3	CARTRIDGE DUAL CHECK VLE	1	HHCA91-323-D-NL	HHCA91-444-D-NL
4	DIAMETER PVC PIPE	1	20"	24"
5	12" PVC SUPPORT CAPS	1		
6	EXPANSION CONNECTION	2	EC-23-NL	EC-4-NL
7 *	COVER	1	W3-95631-001	W3-95631-001
8	BALL VALVE	1	B81-333-NL	B81-444-NL
9	SOLDER BUSHING	2	CS8-23-NL	CS8-44-NL
10	INLET & OUTLET CONNECTION	2	A-31400-02-NL	A-31400-02-NL
11	LOCK NUT	2	A-42716-01	A-42716-01
12 *	EXTENSION RING	1	NONE	EXT-2
	* ORDERED SEPARATELY			

ASSE 1024

PIT DIMENSIONS by area		
AREA	"A" (in.)	"B" (in.)
SEPA	48	40
Roaring Creek	48	40
Susquehanna	60	52

REQUIRED ADAPTERS		
METER SIZE	YOKE	PART NO.
5/8"	Y503	A-13-NL *
5/8" x 3/4"	Y503	A-23-NL *
3/4"	Y503	NONE
5/8"	Y504	A-14-NL *
5/8" x 3/4"	Y504	A-24-NL *
3/4"	Y504	A-34-NL *
1"	Y504	NONE

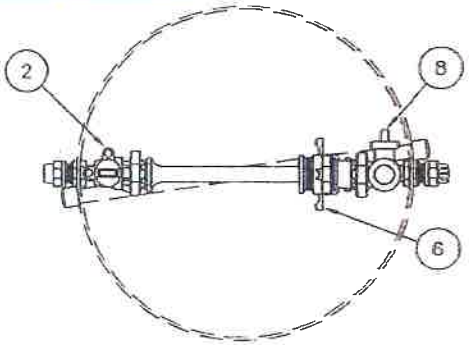

Each part must be NSF/ANSI 61, Annex F & G compliant.

Entire unit must be NSF/ANSI 372 compliant.

Rev. 11-20-2015

ASSY, SINGLE YOKE, 3/4" & 1" METER,
BALL VALVE INLET & CHECK VALVE OUTLET

REF: FORD M. B. Co. PLAN A P5089-342 & 042

DRAWN BY	DLG	DATE 3 2004	DRAWING NO. MB-1
CHK'D BY	MJF	SCALE N.T.S.	

AQUA

Aqua PA Exhibit TMD-4-R
Hearing-Attachment 1

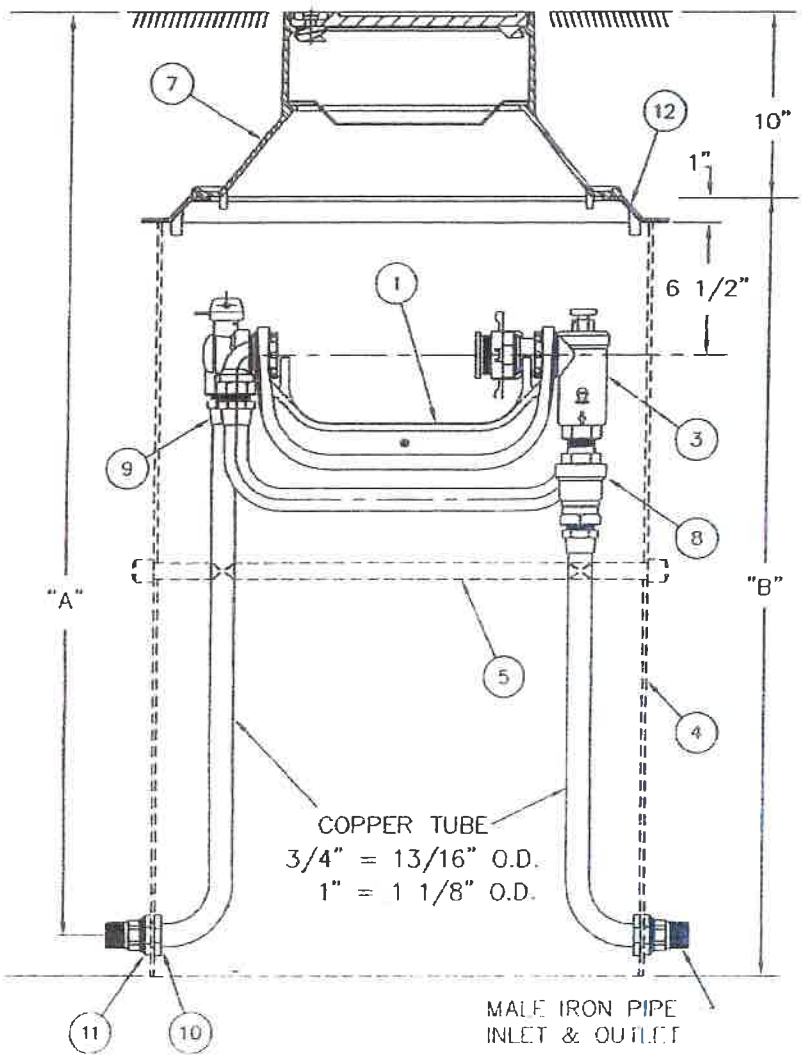

ASSE 1024

NO.	ITEM	QTY.	3/4" DWG or P/N	1" DWG or P/N
1	TWIN YOKE BAR	1	Y503	Y504
2	FULL-PORT ANGLE BALL VLV	1	BA91-323-W-NL	BA91-444-W-NL
3	CARTRIDGE DUAL CHECK VLE	1	HHCA91-323-D-NL	HHCA91-444-D-NL
4	DIAMETER PVC PIPE	1	20"	24"
5	12" PVC SUPPORT CAPS	1		
6	EXPANSION CONNECTION	2	EC-23-NL	EC-4-NL
7 *	COVER	1	W3-95631-001	W3-95631-001
8	BALL VALVE	1	B81-333-NL	B81-444-NL
9	SOLDER BUSHING	2	CS8-23-NL	CS8-44-NL
10	INLET & OUTLET CONNECTION	2	A-31400-02-NL	A-31400-02-NL
11	LOCK NUT	2	A-42716-01	A-42716-01
12 *	EXTENSION RING	1	NONE	EXT-2
	* ORDERED SEPARATELY			

PIT DIMENSIONS by area

AREA	"A" (in.)	"B" (in.)
SEPA	48	40
Rooring Creek	48	40
Susquehanna	60	52

REQUIRED ADAPTERS

METER SIZE	YOKE	PART NO.
5/8"	Y503	A-13-NL *
5/8" x 3/4"	Y503	A-23-NL *
3/4"	Y503	NONE
5/8"	Y504	A-14-NL *
5/8" x 3/4"	Y504	A-24-NL *
3/4"	Y504	A-34-NL *
1"	Y504	NONE

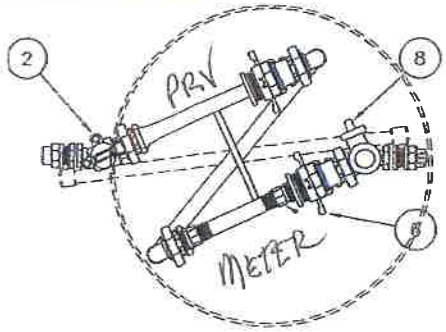

Each part must be NSF/ANSI 61, Annex F & G compliant.

Entire unit must be NSF/ANSI 372 compliant.

Rev. 11-20-2015

ASSY. 3/4" & 1" TWIN YOKE WITH BALL VALVE INLET & CHECK VALVE OUTLET

REF: FORD M. B. Co. PLAN A-95095 040 & 041

DRAWN BY DLC	DATE 12-20-99	DRAWING NO. MB-2
CHK'D BY MJF	SCALE N.T.S.	

AQUA

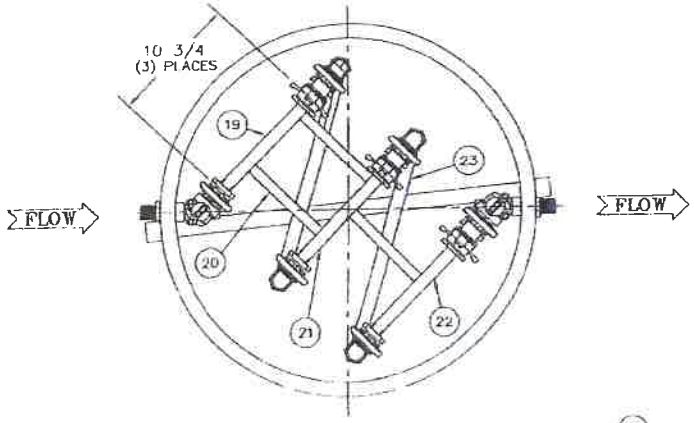

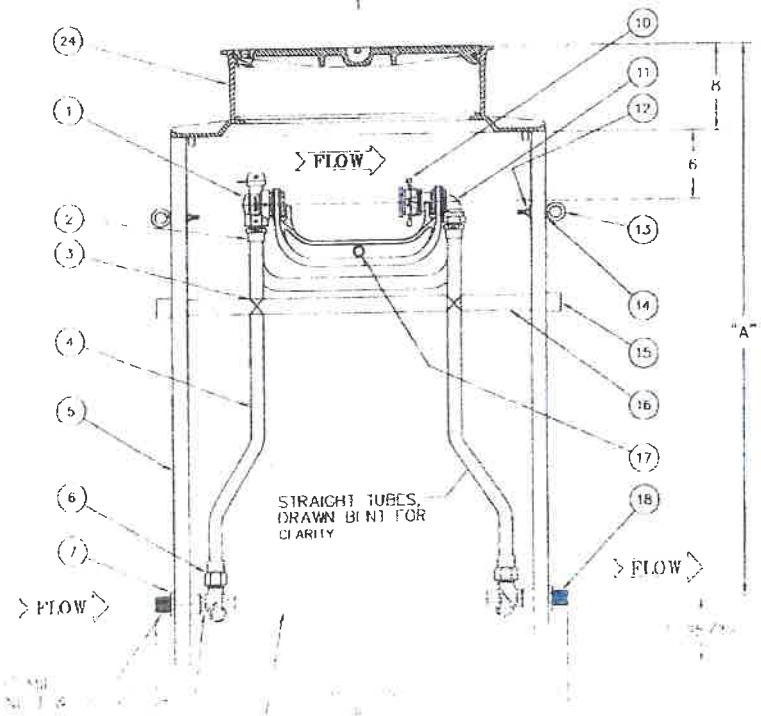

ITEM	DESCRIPTION	QTY.	DWG. or P/N
1	ANGLE YOKE BALL VALVE	2	BA91-444W-NL
2	SOLDER BUSHING	6	CS8-44-NL
3	PLASTIC TIES	4	300370
4	1 1/8" OD COPPER TUBE	2	
5	30" CORRUGATED PVC TILE	1	3000282-LH
6	SOLDER ADAPTER	2	CS1-44-NL
7	LOCK NUT	2	A-42724-04
8	LINESETTER END	2	B-33000-23-NL
9	1 1/8" OD COPPER TUBE	1	
10	EXPANSION CONNECTION	3	EC-4-NL
11	ELL	4	L91-44-NL
12	LOCK NUT	2	800977
13	EYE BOLT	2	800975
14	FLAT WASHER	4	800976
15	1" PVC CAP	2	050424
16	1" PVC BRACE BAR	1	PS-BB-30
17	HEX BOLT	6	800310
18	NIPPLE	2	B-54204-03-NL
19	YOKE BAR w/(2) HOLES	1	B-20203-000-02
20	YOKE SPACER	3	TY-SPACER LARGE
21	YOKE BAR w/(3) HOLES	1	B-20203-000-03
22	YOKE BAR	1	Y504
23	1 1/8" OD COPPER "U" TUBE	2	
24 *	METER BOX COVER	1	MC-30-T
	* ORDERED SEPARATELY		

PIT DIMENSIONS by area

AREA	"A" (in.)
SEPA	48
Roaring Creek	48
Susquehanna	60

REQUIRED ADAPTERS

METER SIZE	YOKE	PART NO.
5/8"	Y504	A-14-NL *
5/8" x 3/4"	Y504	A-24-NL *
3/4"	Y504	A-34-NL *
1"	Y504	NONE

Each part must be NSF/ANSI 61, Annex F & G compliant.
Entire unit must be NSF/ANSI 372 compliant.

ASSY, 1" BRPT YOKE PIT SETTER
BALL VALVE INLET & OUTLET

Aqua PA Exhibit TMD-4-R
Yalhora-9-Attachment 1

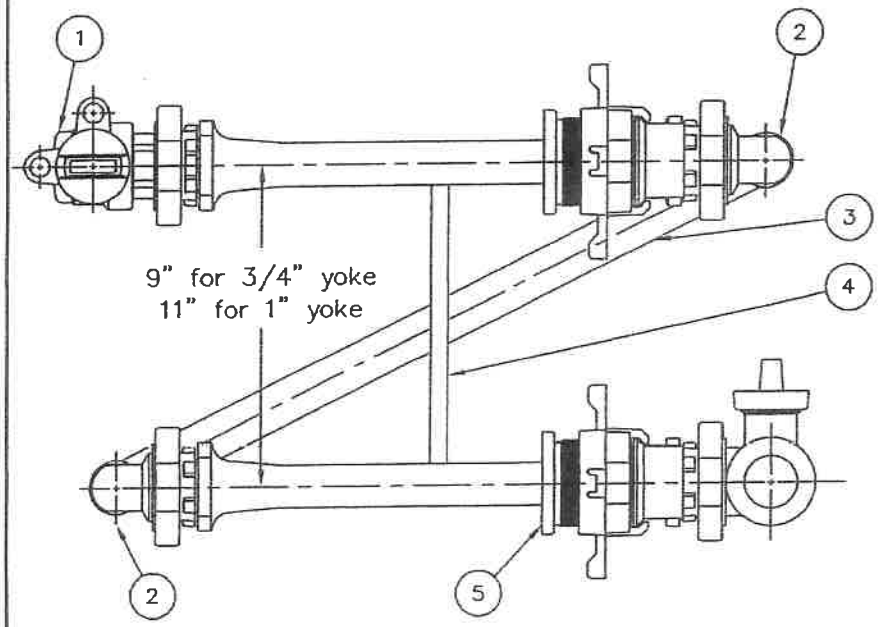

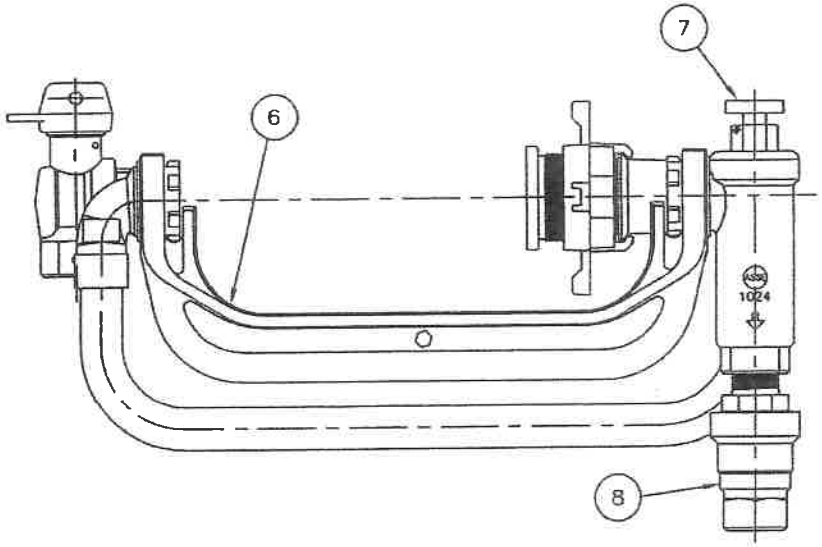

3/4" TWIN YOKE SETTER

ITEM	DESCRIPTION	QTY.	DWG. OR P/N
1	3/4" ANGLE BALL VALVE	1	BA91-323W
2	SOLDER ELBOW	2	B-28003-03
3	15/16" O.D. COPPER CROSS OVER TUBE	1	A-36013-01
4	BRACE BAR	1	A-29001-01
5	EXPANSION CONNECTION	2	EC-23
6	YOKE BAR	2	Y503
7	CARTRIDGE DUAL CHECK VALVE ASSE 1024	1	HHCA91-323-D
8	3/4" BALL VALVE	1	B81-333

1" TWIN YOKE SETTER

ITEM	DESCRIPTION	QTY.	DWG. OR P/N
1	1" ANGLE BALL VALVE	1	BA91-444W
2	SOLDER ELBOW	2	L91-44
3	1 1/8" O.D. COPPER CROSS OVER TUBE	1	*
4	BRACE BAR	1	A-29001-01
5	EXPANSION CONNECTION	2	EC-4
6	YOKE BAR	2	Y504
7	CARTRIDGE DUAL CHECK VALVE ASSE 1024	1	HHCA91-444-D
8	1" BALL VALVE	1	B81-444

Each part must be NSF/ANSI 61, Annex F & G compliant.
Entire unit must be NSF/ANSI 372 compliant.

Rev. 6-10-13

ASSY. 3/4" & 1" TWIN YOKE SETTER WITH BALL VALVE INLET & CHECK VALVE OUTLET

REF: FORD M. B. Co. PLAN A-95095-038 & 039

DRAWN BY DLG	DATE 12-14-99	DRAWING NO. MBY-2
CHK'D BY MJF	SCALE 1/4=1	

AQUA

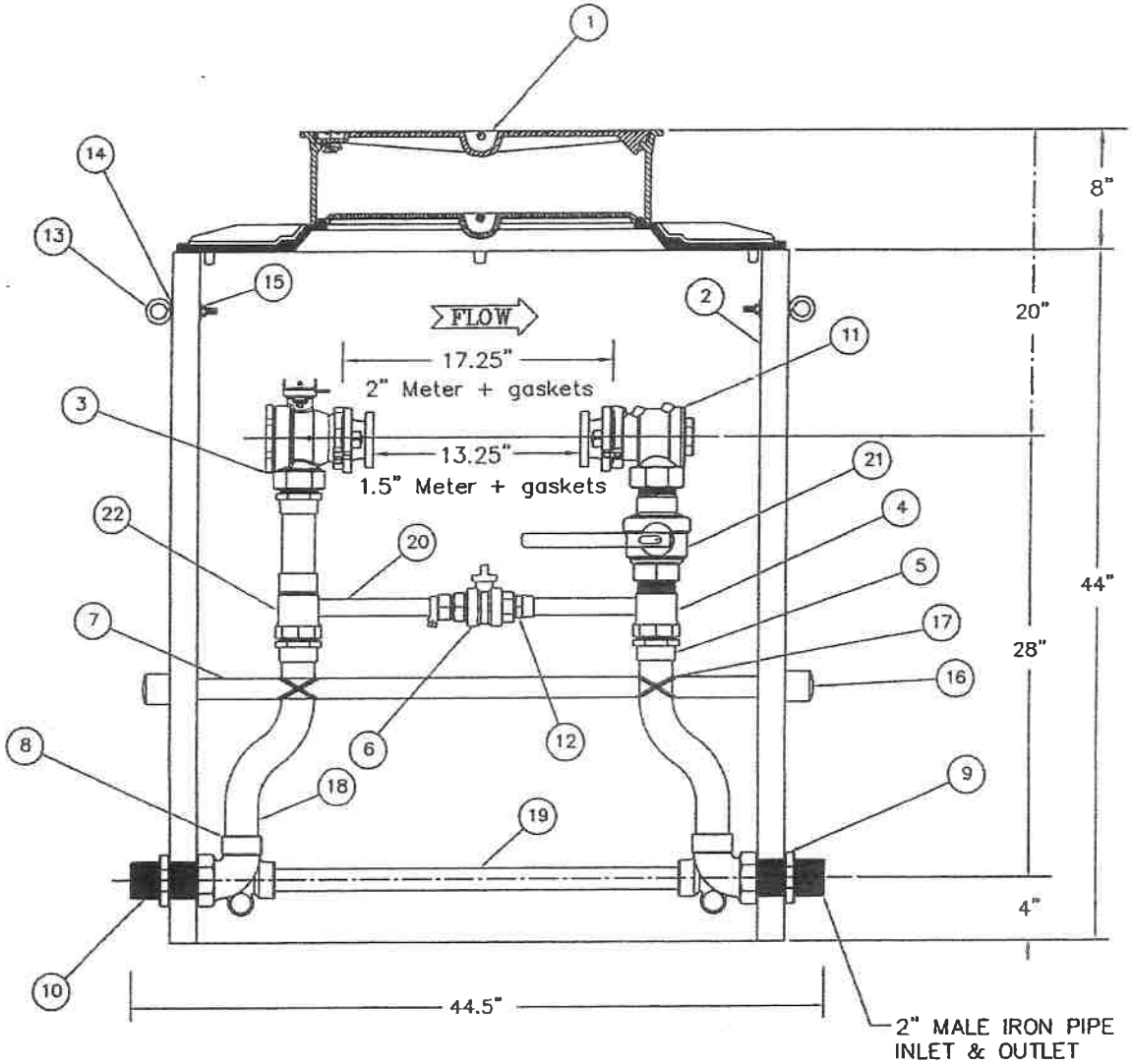

ITEM	DESCRIPTION	QTY.	DWG. or P/N
* 1	Monitor Cover w/Inner lid	1	MC-36-MB-T
2	36" Corrugated PVC Pit	1	300253
3	Angle Ball Valve	1	BFA13-777W-MSB-NL
4	Tee	1	T184-774-NL
5	Solder Bushing	3	CS8-77-NL
6	Ball Valve	1	B41-444W-NL
7	1" PVC Brace bar	1	PS-BB-36
8	Ell	2	CSTEE-7-S-NL
9	Lock Nut	2	800977
10	Nipple	2	A-43908-09-NL
11	Angle Dual Check Valve	1	HHFA31-777-MSB-NL
12	Solder Bushing	1	CS8-44-NL
13	Eye Bolt	2	800975
14	Flat Washer	4	800976
15	Lock Nut	2	800977
16	1" PVC Cap	2	050424
17	Plastic Tie	4	300370
18	2 1/8" OD Copper Tube	2	
19	1 3/8" OD Copper Tube	1	
20	1 1/8" OD Copper Tube	2	
21	Ball Valve	1	B81-777-HB-67-NL
22	Tee	1	T1S4-774-NL

* SOLD SEPARATELY

Each part must be NSF/ANSI 61, Annex F & G compliant.

Entire unit must be NSF/ANSI 372 compliant.

3-17-14

NOTE: ENTIRE UNIT SHALL COMPLY WITH NSF 372

ASSY. 1.5" & 2" PITSETTER W/BYPASS
BALL VALVE Inlet & Outlet, CHECK VALVE Outlet
REF. FORD METER BOX CO. DW'G # B-95455-118-N

DRAWN BY	DATE 4-15-13	DRAWING NO.
CHK'D BY MJF	SCALE 1=10	CSD-I-H

AQUA

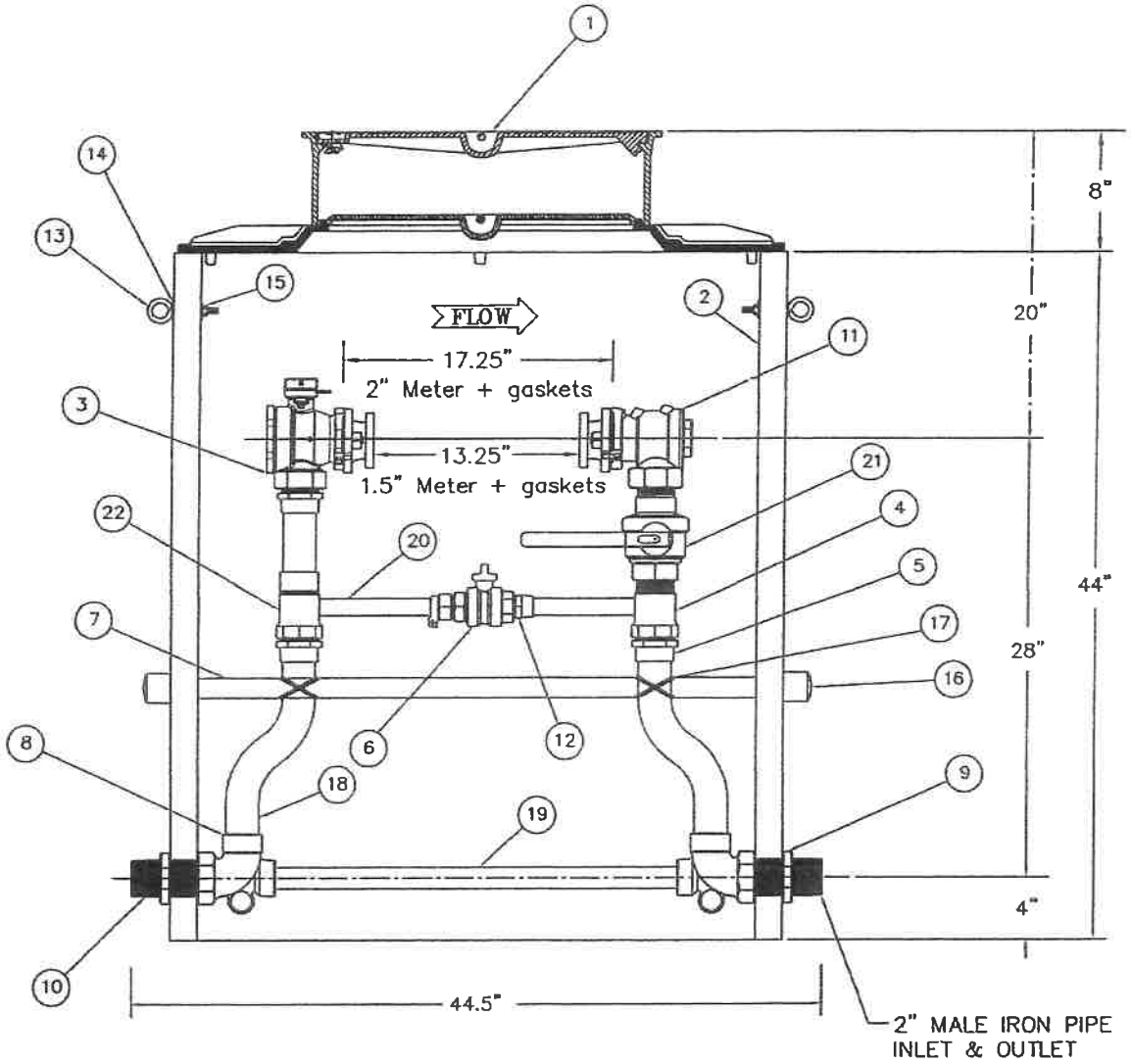

ITEM	DESCRIPTION	QTY.	DWG. or P/N
* 1	Monitor Cover w/Inner lid	1	MC-36-MB-T
2	36" Corrugated PVC Pit	1	300253
3	Angle Ball Valve	1	BFA13-777W-MSB-NL
4	Tee	1	T184-774-NL
5	Solder Bushing	3	CS8-77-NL
6	Ball Valve	1	B41-444W-NL
7	1" PVC Brace bar	1	PS-BB-36
8	Ell	2	CSTEE-7-S-NL
9	Lock Nut	2	800977
10	Nipple	2	A-43908-09-NL
11	Angle Dual Check Valve	1	HHFA31-777-MSB-NL
12	Solder Bushing	1	CS8-44-NL
13	Eye Bolt	2	800975
14	Flat Washer	4	800976
15	Lock Nut	2	800977
16	1" PVC Cap	2	050424
17	Plastic Tie	4	300370
18	2 1/8" OD Copper Tube	2	
19	1 3/8" OD Copper Tube	1	
20	1 1/8" OD. Copper Tube	2	
21	Ball Valve	1	B81-777-HB-67-NL
22	Tee	1	T1S4-774-NL

* SOLD SEPARATELY

Each part must be NSF/ANSI 61, Annex F & G compliant.

Entire unit must be NSF/ANSI 372 compliant.

3-17-14

NOTE: ENTIRE UNIT SHALL COMPLY WITH NSF 372

ASSY. 1.5" & 2" PITSETTER W/BYPASS
BALL VALVE Inlet & Outlet, CHECK VALVE Outlet
REF. FORD METER BOX CO. DW'G # B-95455-118-N

DRAWN BY	DATE 4-15-13	DRAWING NO. CSD-I-H
CHK'D BY MJF	SCALE 1=10	

AQUA

Aqua PA Exhibit TMD-4-R
Valhora-Attachment 1

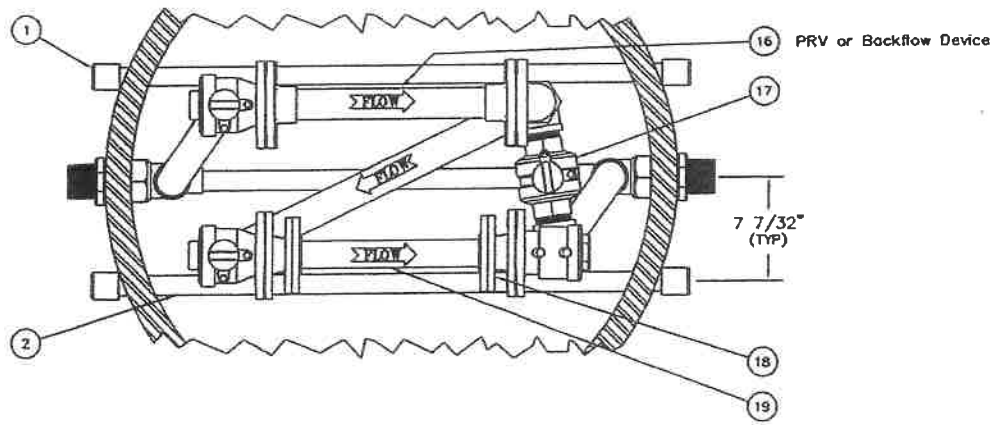

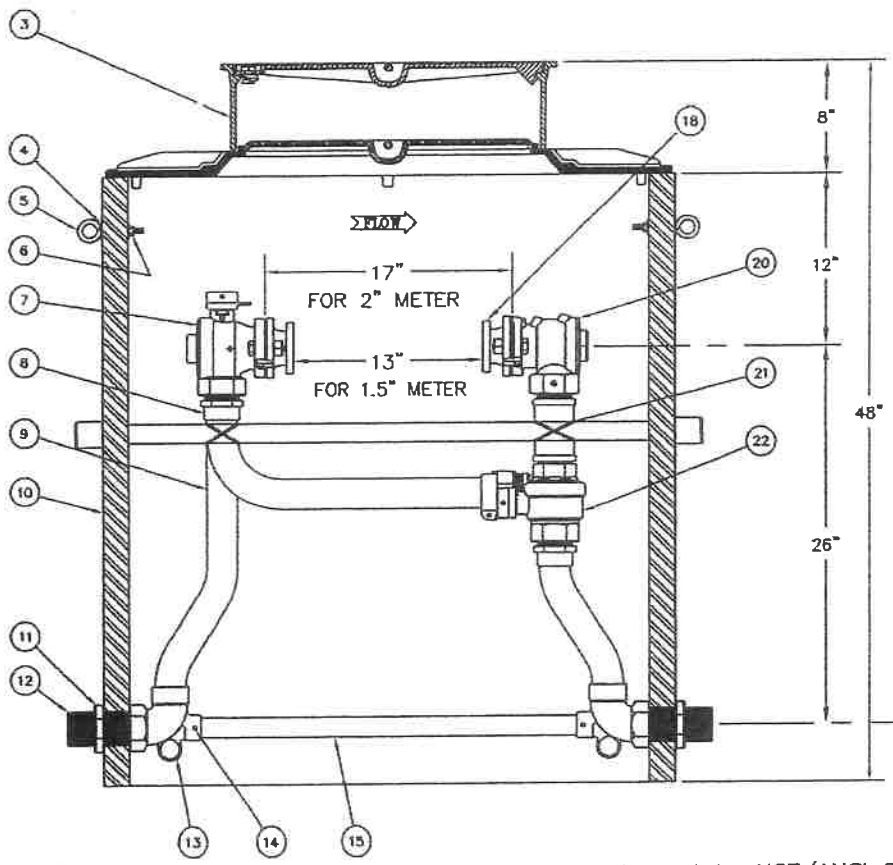

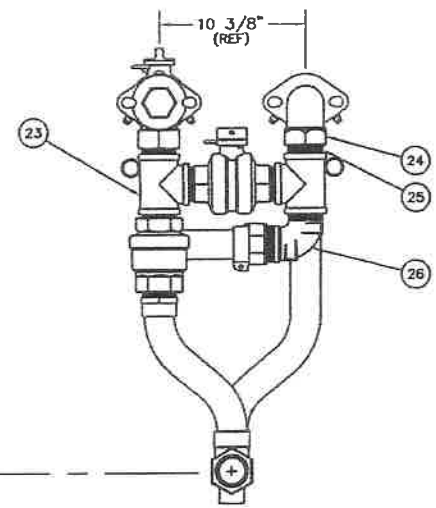

ITEM	DESCRIPTION	QTY.	DWG. or P/N
1	1" PVC CAP	4	050424
2	1" PVC BRACE BAR	2	PS-BB-36-39-437
3 *	MONITOR COVER w/INNER LID	1	MC-36-MB-T
4	FLAT WASHER	4	800976
5	EYE BOLT	2	800975
6	LOCK NUT	2	800977
7	FLANGED ANGLE BALL VALVE	2	BFA13-777W-MSB-NL
8	SOLDER BUSHING	3	CS8-77-NL
9	2 1/8" OD COPPER TUBE	3	
10	36" CORRUGATED PVC TILE	1	300263
11	LOCK NUT	2	A-42722-02
12	NIPPLE	2	A-43908-09-NL
13	TEE	2	CSTEE-7-S-NL
14	BRASS COTTER PIN	2	800910
15	1 3/8" OD COPPER TUBE	1	
16	2" IDLER (PRV or BF device)	1	IDLER-7
17	BALL VALVE	1	B88-777W-NL
18*	METER FLANGE ADAPTER/PR	1	A67-NL
19	1 1/2" IDLER (Meter)	1	IDLER-6
20	FLANGED ANGLE DUAL CK VL	1	HHFA31-777-MSB-NL
21	BLACK PLASTIC TIES	8	300370
22	BALL VALVE	1	B11-777-HB-67-NL
23	2" BRASS TEE	2	950347-NL
24	FLANGED ELL	1	LF31-77-MSB-NL
25	2" BRASS CLOSE NIPPLE	3	950250-NL
26	ELL	1	L84-77-NL
	* ORDERED SEPARATELY		

Each part must be NSF/ANSI 61, Annex F & G compliant.

Entire unit must be NSF/ANSI 372 compliant.

Rev. 3-11-2014

ASSY. 1.5" & 2" PIT SETTER, BALL VALVE IN TO DUAL CHECK VALVE OUT, W/BY-PASS

REF. FORD METER BOX CO. DWG # B-C3816-01

DRAWN BY DLG	DATE 8-1-02	DRAWING NO. CSD-2
CHK'D BY MJF	SCALE 1/4=1-R	

AQUA

Aqua PA Exhibit TMD-4-R
Valhora 3-9-14 Attachment 1

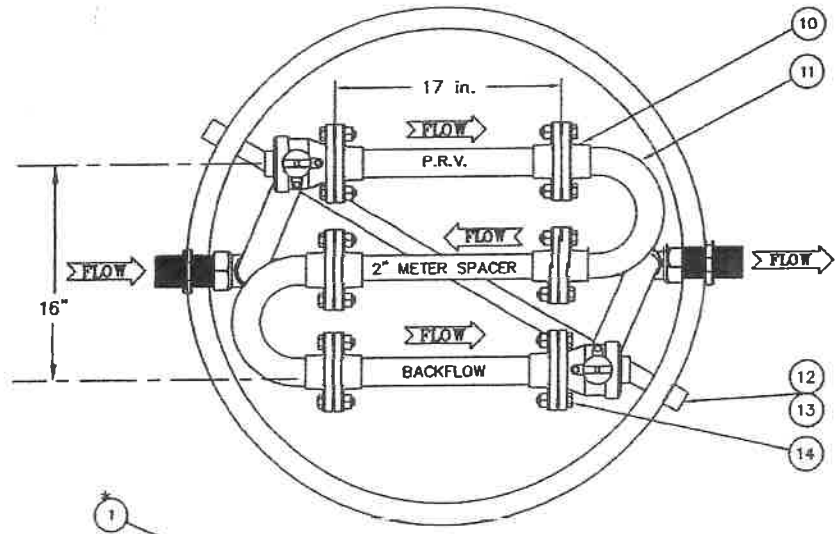

ITEM	DESCRIPTION	QTY.	D /N
* 1	MON COVER w/INNER LID, E-READ	1	Mc -MB-T
2	36" CORRUGATED PVC TILE	1	300253
3	EYE BOLT	2	800975
4	FLAT WASHER	4	800976
5	LOCK NUT	2	800977
6	2 1/8" OD COPPER TUBE	2	
7	LOCK NUT	2	A-42722-02
8	TEE	2	CSTEE-7-S-NL
9	1 3/8" OD COPPER TUBE	1	
10	METER FLANGE	4	CF3S-77-2-125-NL
11	2 1/8" OD COPPER "U" TUBE	2	
12	1" PVC BRACE BAR	1	PS-BB-36
13	1" PVC CAP	2	50424
14	FLANGE, BOLT & NUT (PAIR)	6	PSB
15	2" IDLER	3	IDLER-7
16	FLANGED ANGLE BALL VALVE	2	BFA13-777W-MSB-NL
17	SOLDER BUSHING	2	CSB-77-NL
18	PLASTIC TIES	4	300370
19	NIPPLE	2	A-43908-09-NL
	* ORDERED SEPARATELY		

Each part must be NSF/ANSI 61, Annex F & G compliant.
Entire unit must be NSF/ANSI 372 compliant.

NOTE:
ALL METER FLANGES DRILLED
FOR 1 1/2" & 2" METERS

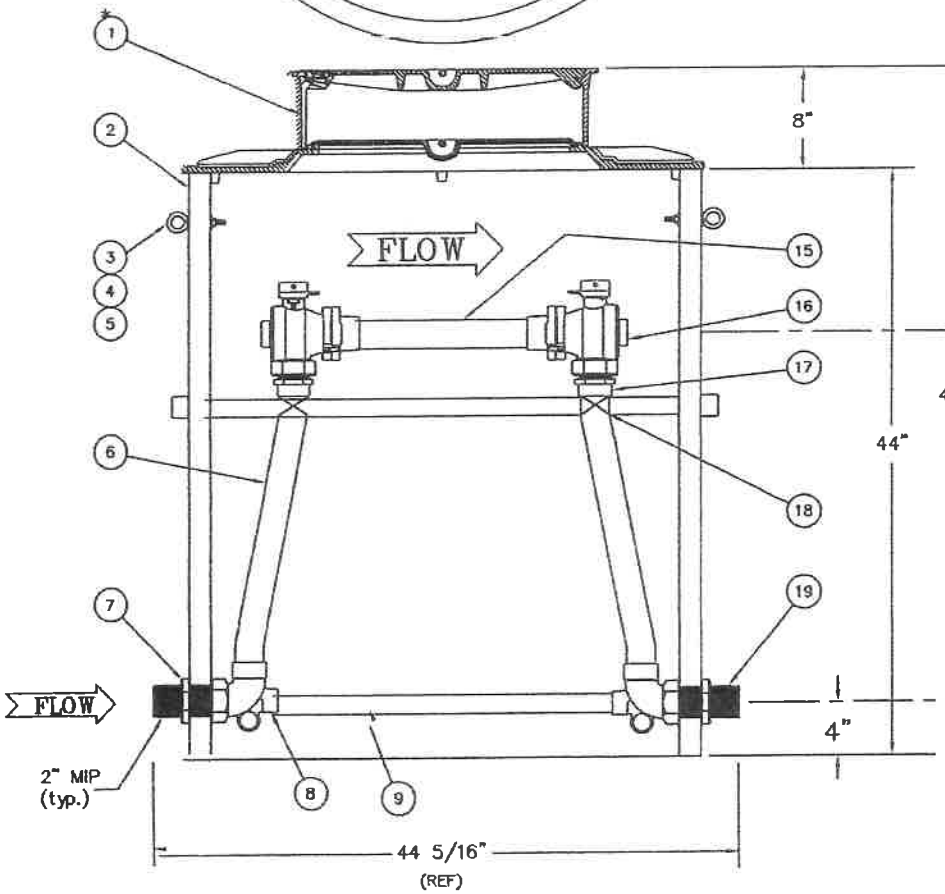

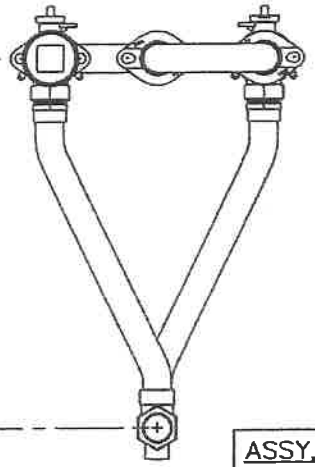

Rev. 3-12-2014

ASSY. 2" TRIPLE PIT SETTER, 17" SPACING
(3) PLACES, 48" SERVICE LINE DEPTH

REF: FORD M.B.Co. PLAN B-95595-01

DRAWN BY DLG	DATE 3-2-04	DRAWING NO. CSD-3
CHK'D BY MJF	SCALE 1/10=1	

AQUA

Aqua PA Exhibit TMD-4-R
Valhora 9-Attachment 1

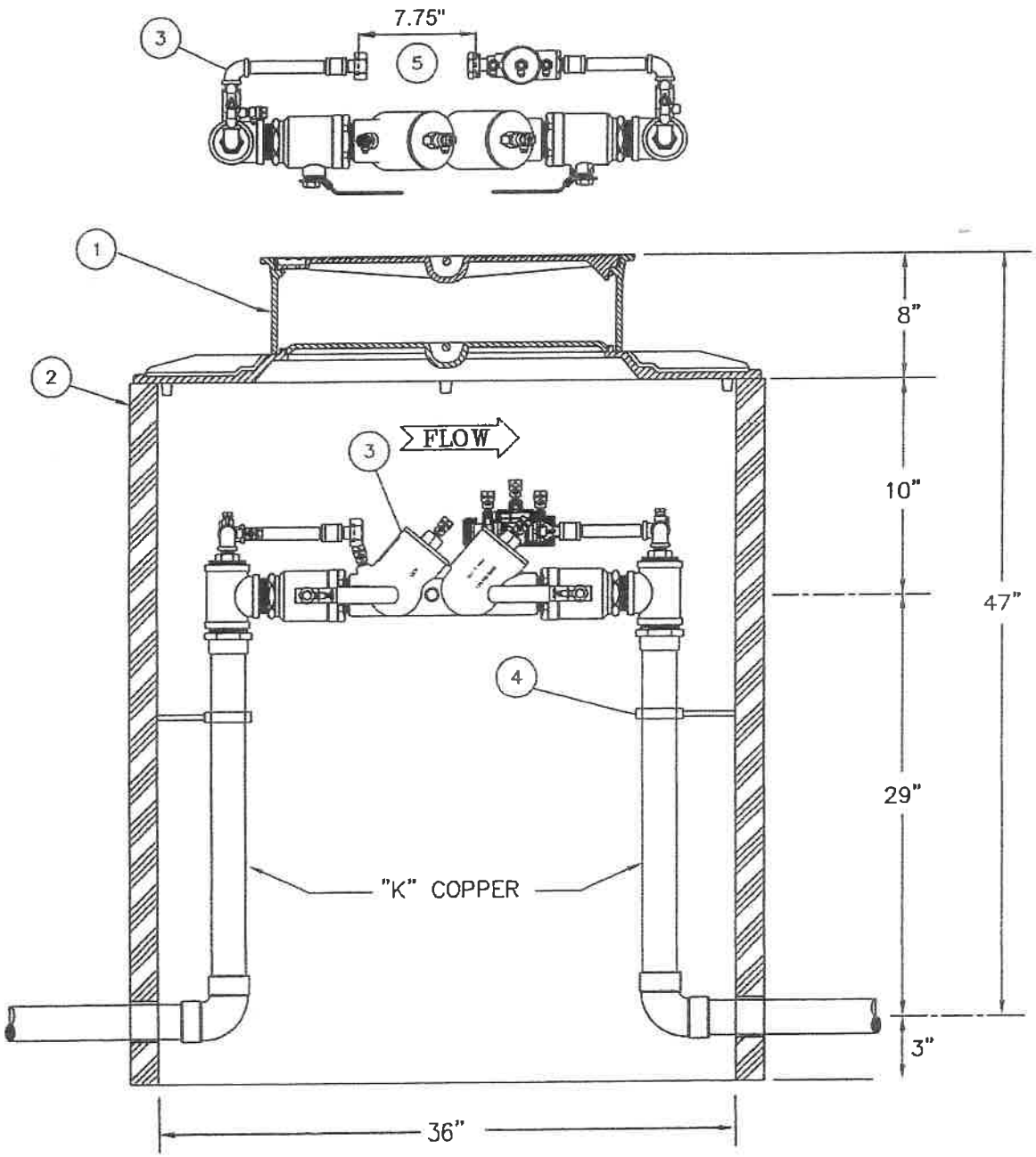

ITEM	DESCRIPTION	QTY.	DWG. OR P/N
1	MONITOR COVER W/INNER LID	1	MC-36-MB-T
2	36" x 42" PIT	1	none
3	1, 1.5, 2" DCDA Vert 40-600 Series	1	40-608-G2V
4	SUPPORT W/ ANCHOR	2	none
5	5/8" x 3/4" METER w/ gaskets	1	(by Water Co.)
3	2" Model 950XLTDA (Wilkins)		

Each part must be NSF/ANSI 61, Annex F & G compliant.
Entire unit must be NSF/ANSI 372 compliant.

DCDA Assembly must be UL & FM approved

Rev. 3-14-2014

1", 1.5", 2" DCDA in Custom Setter Pit

REF. APOLLO VALVES DWG # 40-608-G2V		
DRAWN BY	DATE 2-27-06	DRAWING NO. CSF-1
CHK'D BY MJF	SCALE 1=10	

AQUA

Aqua PA Exhibit TMD-4-R
Valdora-9-Attachment 1

DCDA Assembly must be UL & FM approved.

ITEM	DESCRIPTION	QTY.	DWG. OR P/N
1	FORD MONITOR COVER W/INNER LID	1	MC-36-MB-T
2	36" x 42" PIT	1	none
3	1, 1.5, 2"DCDA, Vert 40-600 Series	1	40-608-G2V
4	PIPE HANGER w- 1/2" ANCHOR	4	none
5	5/8" x 3/4" METER w/ gaskets	1	(by Water Co.)
6	"K" Copper		none
3	2" Model 950XLTDA (Wilkins)		

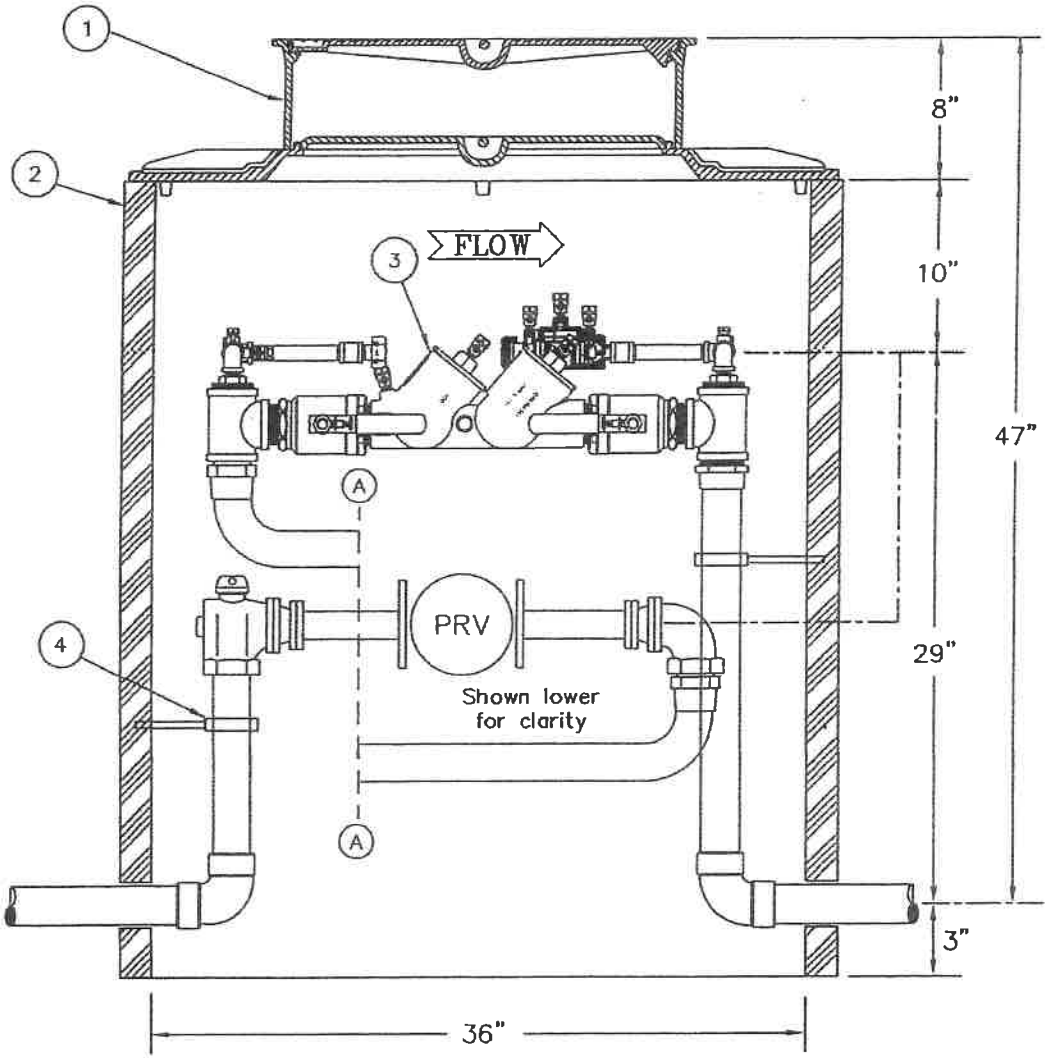

SIDE VIEW

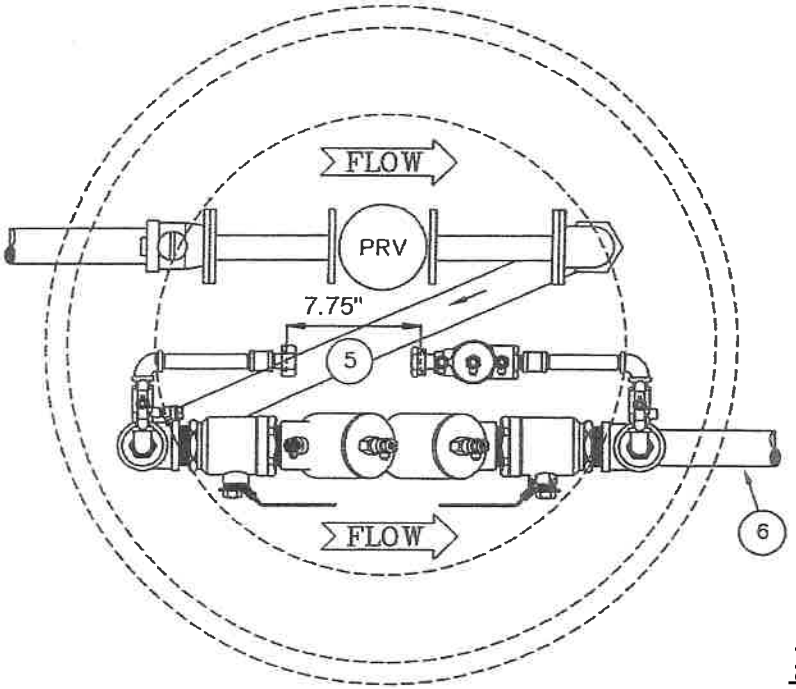

PLAN VIEW

Each part must be NSF/ANSI 61, Annex F & G compliant.
Entire unit must be NSF/ANSI 372 compliant.

Rev. 3-17-2014

1", 1.5", 2" DCDA w-PRV Custom Setter Pit

REF. Apollo Viv Dw'g G & 40-608-G2V & Ford M.B. Co. A-95095

DRAWN BY	DATE 8-11-08	DRAWING NO.
CHK'D BY MJF	SCALE N.T.S.	CSF

AQUA

Aqua PA Exhibit TWD-4-R
Yalinda-3-3-A Attachment 1

DCDA Assembly must be UL & FM approved.

Double Check Dectorter Assemby

ITEM	DESCRIPTION	QTY.	DWG. OR P/N
1	FORD MONITOR COVER W/INNER LID	1	MC-36-MB-T
2	36" x 42" PIT	1	none
3	1" – 2" DCDA, Vert 40-600 Series	1	40-608-G2V
4	PIPE HANGER w- 1/2" ANCHOR	4	none
5	5/8" x 3/4" METER w/ gaskets	1	(by Water Co.)
6	METER IN SINGLE YOKE	1	FB-LP-1
7	"K" COPPER		
8			

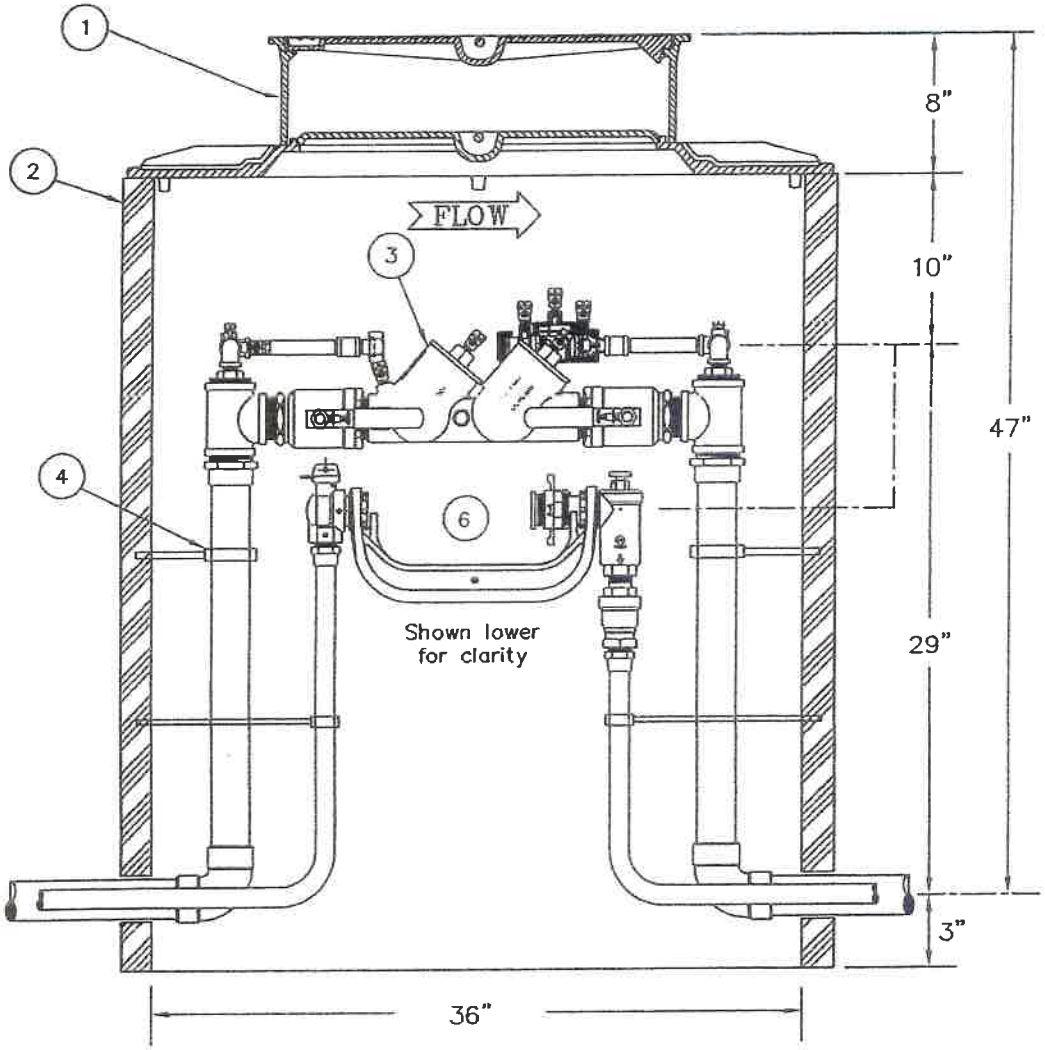

SIDE VIEW

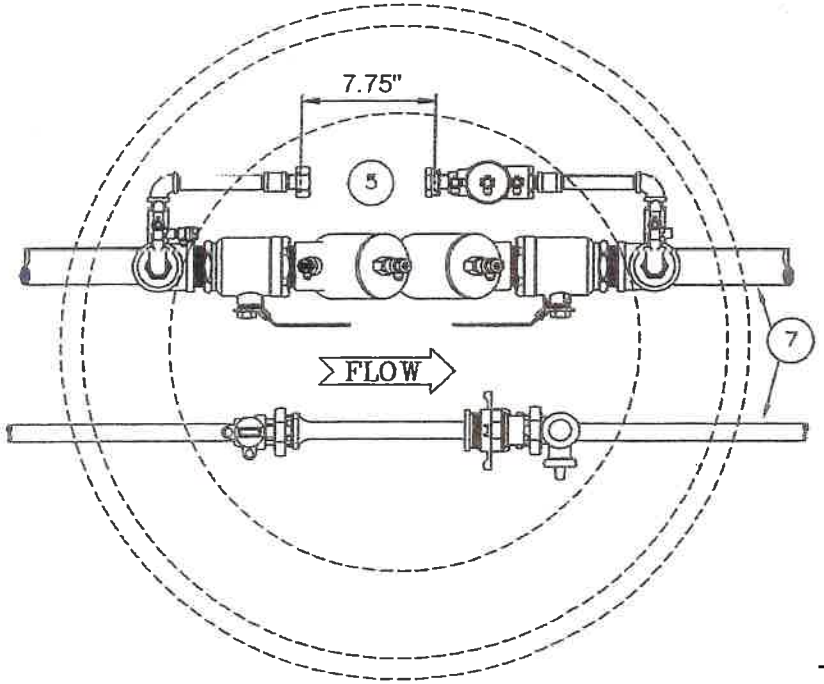

PLAN VIEW

Each part must be NSF/ANSI 61, Annex F & G compliant.

Entire unit must be NSF/ANSI 372 compliant.

Rev. 3-12-2014

1" – 2" DCDA w- 3/4" – 1" LP Dom		
REF- Apollo Wv Dw'g G # 40-608-G2V & Ford M.B. Co. A-95095-04		
DRAWN BY	DATE 10-9-07	DRAWING NO. CSFD-
CHK'D BY MJF	SCALE N.T.S.	
AQUA		

Aqua PA Exhibit TMD-4-R
Yahara-3 Attachment 1

DCDA Assembly must be UL & FM approved.

ITEM	DESCRIPTION	QTY.	DWG. OR P/N
1	FORD MONITOR COVER W/INNER LID	1	MC-36-MB-T
2	36" x 42" PIT	1	
3	1"- 2" DCDA, Vert 40-600 Series	1	40-608-G2V
4	PIPE HANGER w- 1/2" ANCHOR	4	
5	5/8" x 3/4" METER w/ gaskets	1	(by Water Co.)
6	METER & PRV IN TWIN YOKE	1	FB-HP-1
7	"K" COPPER		
8			

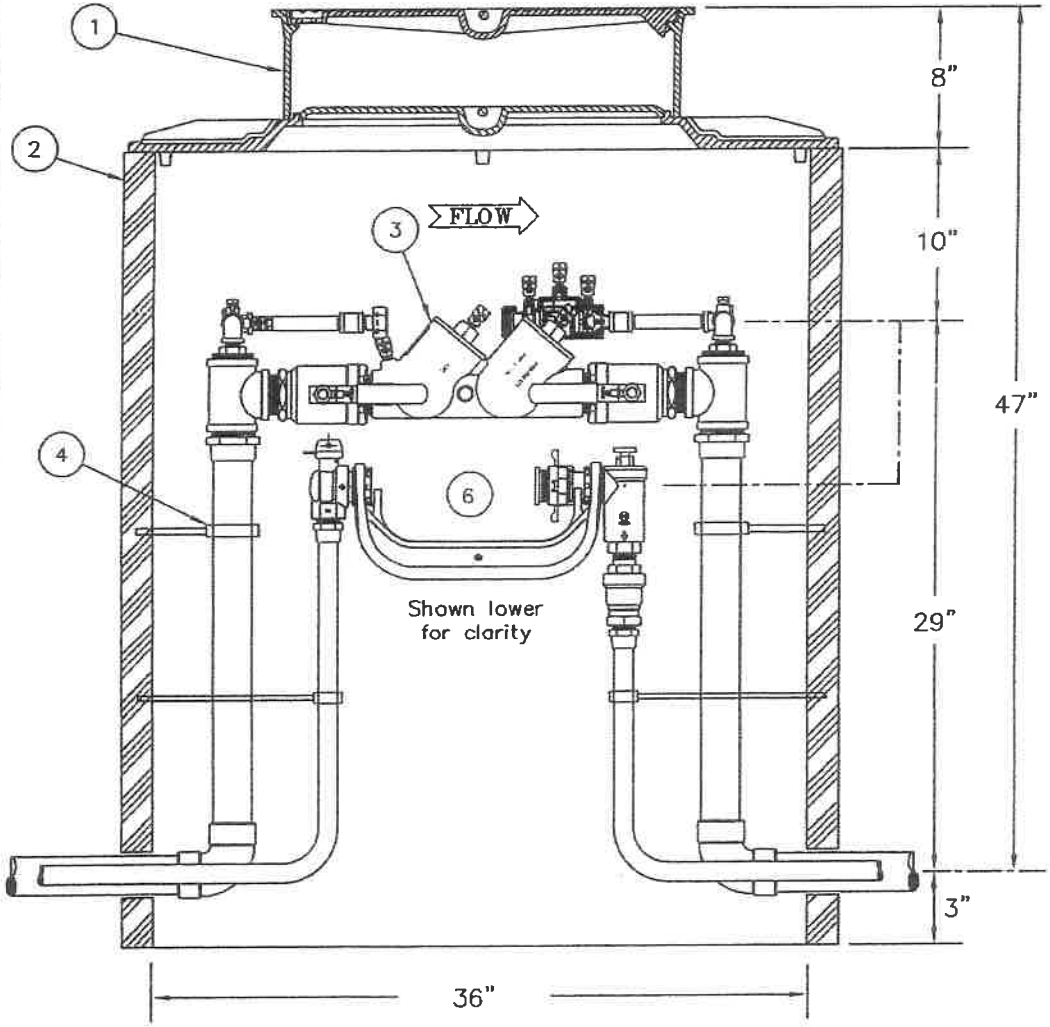

SIDE VIEW

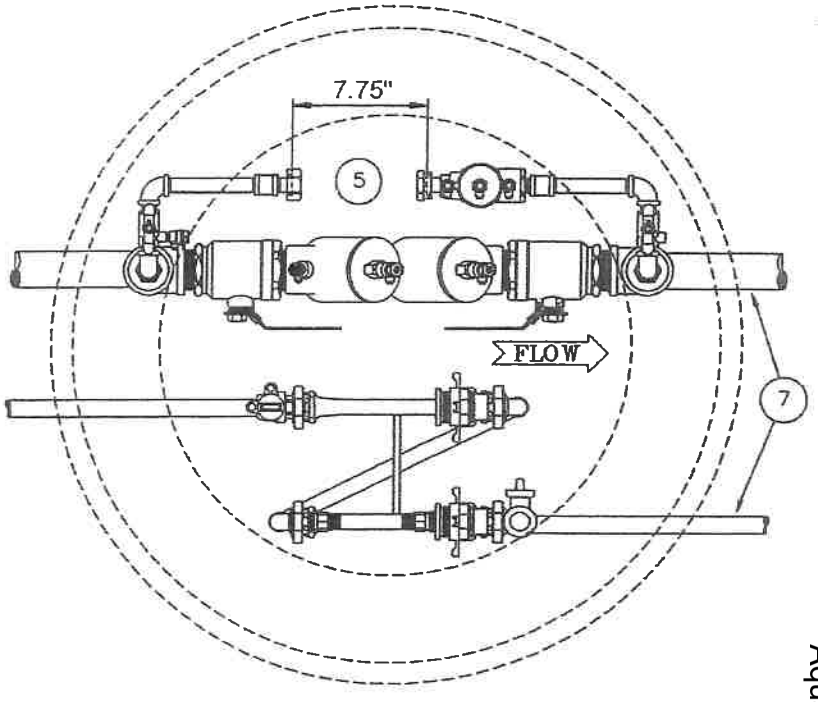

PLAN VIEW

Each part must be NSF/ANSI 61, Annex F & G compliant.

Entire unit must be NSF/ANSI 372 compliant.

Rev. 3-12-2014

1" - 2" DCDA w- 3/4" - 1" HP Dom		
REF. Apollo Viv Dw'g G # 40-608-G2V & Ford M.B. Co. A-95095-0		
DRAWN BY	DATE 7-10-09	DRAWING NO. CSFD-
CHK'D BY MJF	SCALE N.T.S.	

AQUA

Aqua PA Exhibit TWD-4-R
Yalhora-Attachment 1

DOMESTIC SERVICE – 5/8", 3/4", and 1" METERS

__ LOW PRESSURE
(up to 80 psi)

__ HIGH PRESSURE
(over 80 psi) See notes below.

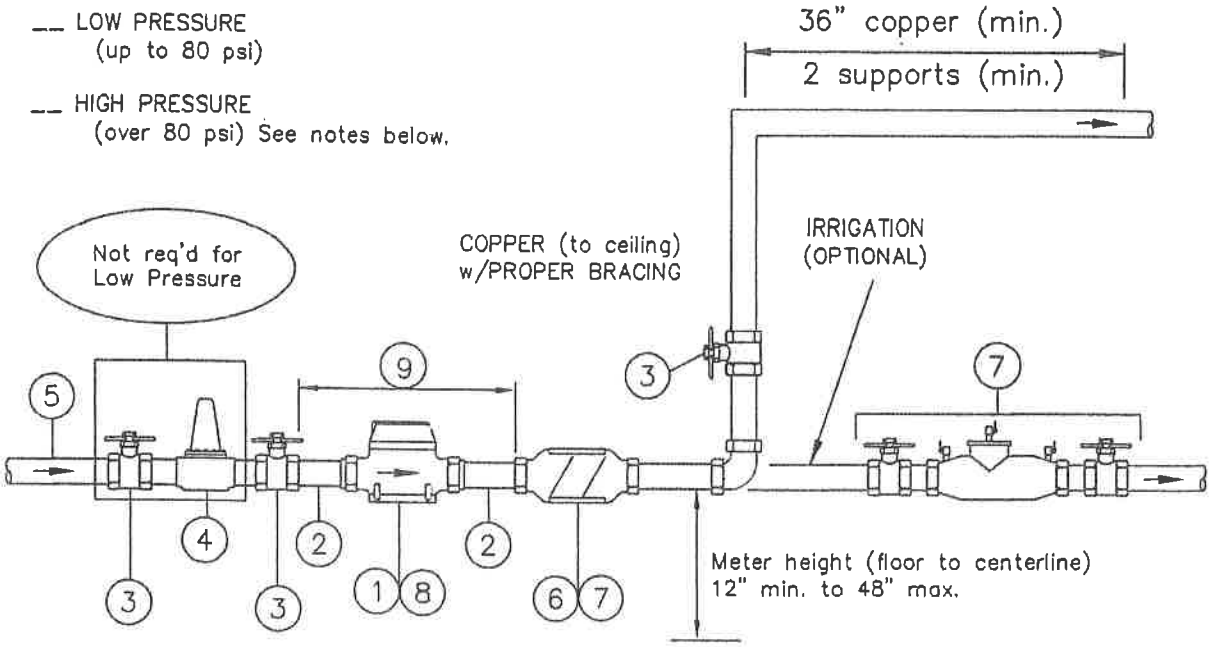

	ITEM			
1	Meter (by Water Co.)	**5/8" x 3/4"**	**3/4"**	**1"**
2	Meter Couplings (standard length)	3/4"	3/4"	1"
	Ford Meter Box Part No.	C38-23-2.5	C38-23-2.5	C38-44-2.625
3	Full-port Ball Valve	3/4"	3/4"	1"
4	Pressure Reducing Valve (PRV)	SIZED BY CUSTOMER		
5	Line Size ("K" copper)	3/4"	3/4"	1"
6	Residential Dual Check Valve	3/4"	3/4"	1"
7	Backflow device - DCVA or RPZA (Irrig. or Non-Residential)	3/4"	3/4"	1"
	type determined by the Water Company.			
8	Laying Length of Meter	7 1/2"	9"	10 3/4"
9	Laying Length of Meter and Couplings	12"	13 3/8"	15 1/4"

Notes:

A. It is the CUSTOMER's responsibility to address THERMAL EXPANSION before the installation of a PRV or backflow device.

B. A pressure vacuum breaker must be installed on all hose–bib connections.

C. Water Company Rules & Regulations require that all of the specifications are met and a meter is set before water service is turned on.

D. It is the CUSTOMER's responsibility to size the pressure reducing valve(s) to fit their flow needs. Two–stage reduction may be needed where there is a wide variation between the initial pressure and the reduced pressure. Parallel installation may be needed where there is a wide variation of reduced pressure requirements, where it is vital to maintain a continuous water supply, or other reasons for improved performance.

E. Each part must be NSF/ANSI 61 (Annex F & G) compliant.
Entire unit must be NSF/ANSI 372 compliant.

rev. 3–12–14

AQUA	
Domestic Service 5/8"–1" Meters	
ck'd by: MJF	Plan No. D–1

DOMESTIC SERVICE – 1.5" and 2" METERS

__ LOW PRESSURE (up to 80 psi) __ HIGH PRESSURE (over 80 psi) See notes below.

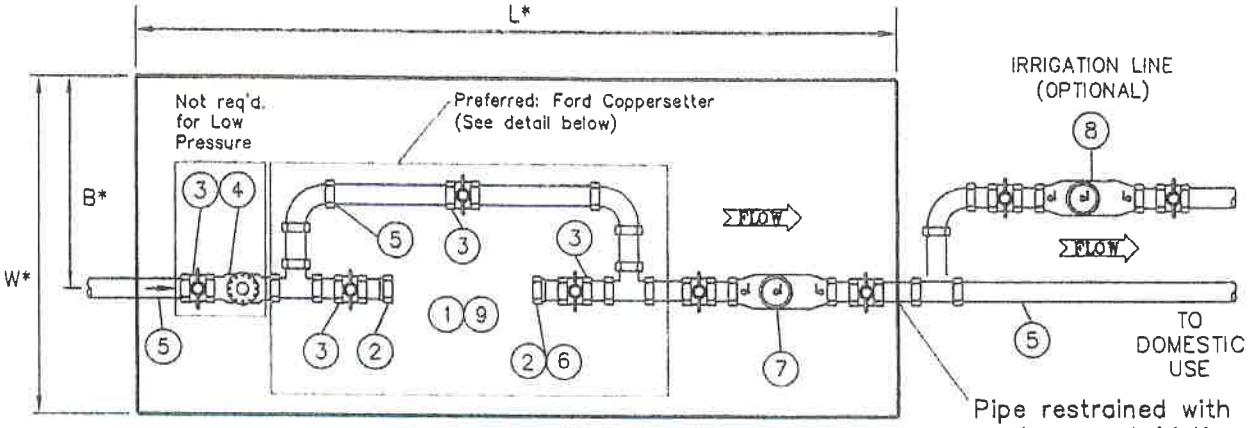

* Refer to PLAN No. D-4 for pit dimensions.

FORD COPPERSETTER
Non-Residential (pictured below)
1.5"– VBB76-12B-11-66-NL
2"– VBB77-12B-11-77-NL
Residential
1.5"– VBHH76-12BHC-11-66-NL
2"– VBHH77-12BHC-11-77-NL

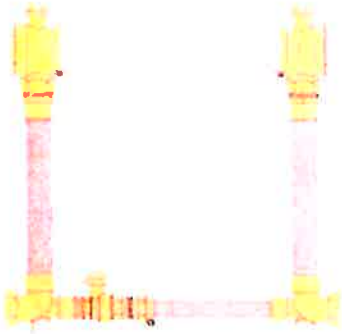

	ITEM		
1	Meter (by Water Co.)	1.5"	2"
2	Meter Flange - Bronze, 2-bolt pattern	1.5"	2"
	Ford Meter Box Part No.	CF31-66	CF31-77
3	Full-port Ball Valve (Mainline)	1.5"	2"
	Full-port Ball LOCKING Valve (by-pass)	1.5"	2"
4	Pressure Reducing Valve (PRV)	SIZED BY CUSTOMER	
5	Line Size ("K" copper)	1.5"	2"
6	Loc-Pac Meter Coupling (PIT ONLY)	1.5"	2"
	Ford Meter Box Part No. (for Copper)	CF34-66	CF34-77
	Ford Meter Box Part No. (for Brass)	CF35-66	CF35-77
7 *	Backflow device - DCVA or RPZA	1.5"	2"
8 *	Backflow device - DCVA or RPZA (Irrigation)	SIZED BY CUSTOMER	
*	** type determined by the Water Company*		

Notes:

A. It is the CUSTOMER's responsibility to address THERMAL EXPANSION before the installation of a PRV or backflow device.

B. A pressure vacuum breaker must be installed on all hose-bib connections.

C. Water Company Rules & Regulations require that all of the specifications are met and a meter is set before water service is turned on.

D. It is the CUSTOMER's responsibility to size the pressure reducing valve(s) to fit their flow needs. Two-stage reduction may be needed where there is a wide variation between the initial pressure and the reduced pressure. Parallel installation may be needed where there is a wide variation of reduced pressure requirements, where it is vital to maintain a continuous water supply, or other reasons for improved performance.

E. Each part must be NSF/ANSI 61 (Annex F & G) compliant. Entire unit must be NSF/ANSI 372 compliant.

AQUA	
1.5" & 2" Domestic Services	
ck'd by: MJF	Plan No. D-2

rev. 3-18-14

DOMESTIC SERVICE – 3" through 10" METERS

__ LOW PRESSURE (up to 80 psi)

__ HIGH PRESSURE (over 80 psi) See notes below.

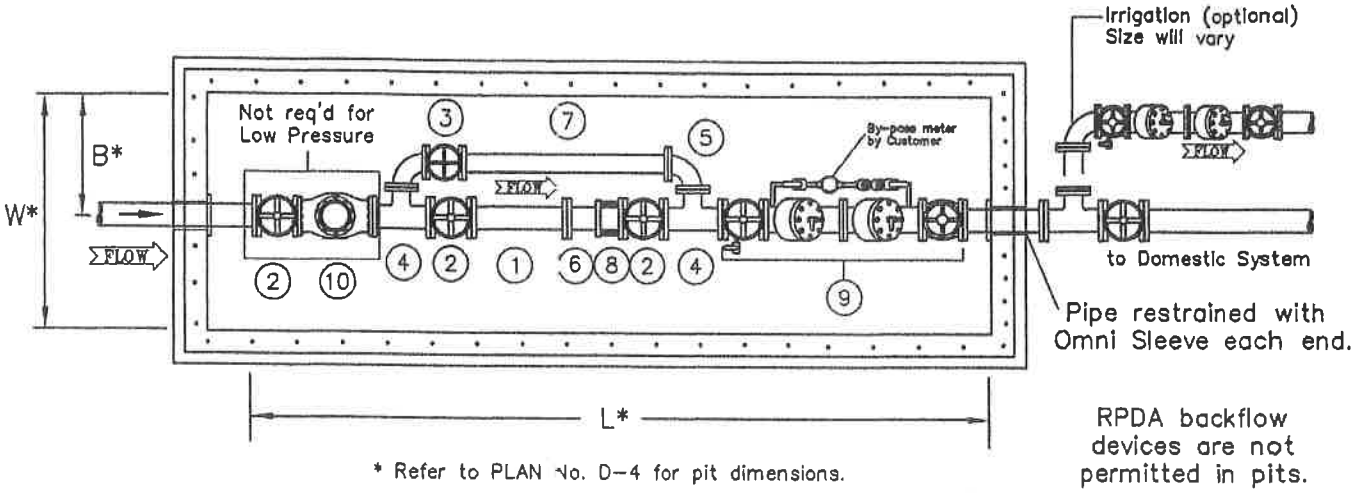

RPDA backflow devices are not permitted in pits.

* Refer to PLAN No. D–4 for pit dimensions.

	DESCRIPTION					
1	Meter	3"	4"	6"	8"	10"
	Meter Length (flange to flange)	33.25"	33.25"	36.5"	53"	68"
2	R.S. Gate Valve, OS&Y, Flg (mainline)	3"	4"	6"	8"	10"
3	R.S. Gate Valve, OS&Y, Flg (by-pass)	3"	3"	4"	6"	6"
4	By-pass Tee	3" x 3"	4" x 3"	6" x 4"	8" x 6"	10" x 6"
5	Long Radius 90o Bend	3"	3"	4"	6"	6"
6	Spool Piece, Flg x PE (for exp. cpl'g.) PIT ONLY	1' - 0" MINIMUM w/ 1" traverse gap in exp cpl'g				
7	Spool Piece, Flg x Flg (for by-pass)	LENGTH AS NEEDED				
8	Flanged Coupling Adaptor - PIT ONLY	Ford - Style FFCA or Smith-Blair - Style 912				
9	Backflow device - DCDA or RPDA	3"	4"	6"	8"	10"
	as req'd by the Water Company.					
10	Pressure Reducing Valve (PRV)	SIZED BY CUSTOMER				

Notes:

A. It is the CUSTOMER's responsibility to address THERMAL EXPANSION before the installation of a PRV or backflow device.

B. A pressure vacuum breaker must be installed on all hose–bib connections.

C. Water Company Rules & Regulations require that all of the specifications are met and a meter is set before water service is turned on.

D. It is the CUSTOMER's responsibility to size the pressure reducing valve(s) to fit their flow needs. Two–stage reduction may be needed where there is a wide variation between the initial pressure and the reduced pressure. Parallel installation may be needed where there is a wide variation of reduced pressure requirements, where it is vital to maintain a continuous water supply, or other reasons for improved performance.

E. Incoming service size should equal meter size. If the meter size is approved to be smaller than the service size, the meter space shall be replaced with a spacer for the approved meter size and concentric reducers on each side of the meter spacer. The length of the meter pit may increase.

F. Each part must be NSF/ANSI 61 (Annex F & G) compliant.
Entire unit must be NSF/ANSI 372 compliant.

Rev. 3–13–14

AQUA	
Domestic Service - 3" to 10"	
ck'd by: MJF	Plan No. D-3

SINGLE SERVICE PIT DIMENSIONS
for DOMESTIC Service

TOP VIEW

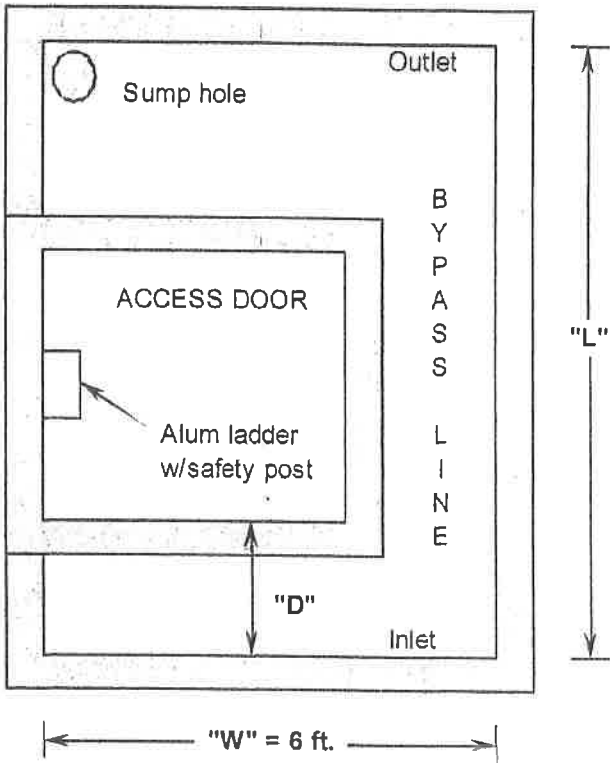

FRONT VIEW

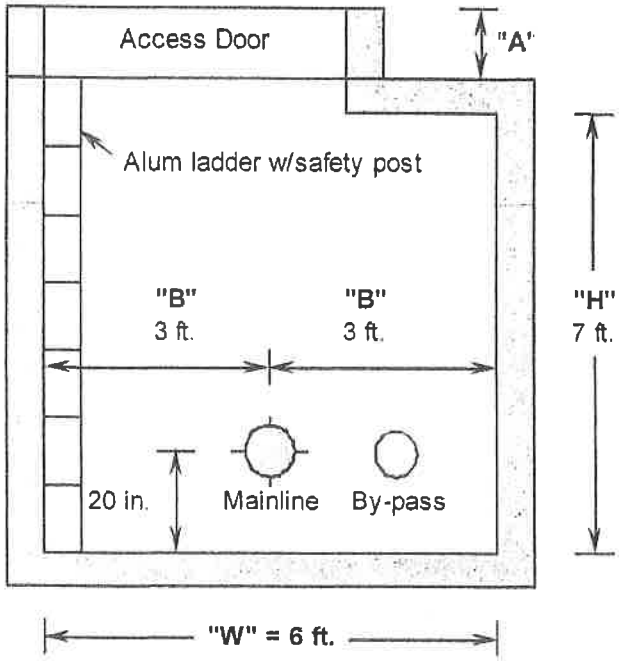

Refer to Plan DS-1 for additional notes.

		Domestic Service Size					
Dim	**Description**	**3"**	**4"**	**6"**	**6"C**	**8"**	**10"**
L	Length - Low Pressure	9'	9'	10'	11'	12'	15'
L	Length - Low Pressure w/ Backflow	12'	13'	14'	15'	17'	19'
L	Length - High Pressure	10'	11'	13'	14'	15'	18'
L	Length - High Pressure w/ Backflow	14'	15'	17'	18'	20'	23'
W	Width	6 ft.					
H	Height	7 ft.					
B	Centerline of pipe to side wall	3 ft.					
D	* Front of Door Opening to Inlet Wall (Low Pressure)	2'	2'	3'	3'	3'	3'
D	* Front of Door Opening to Inlet Wall (High Pressure)	4'	4'	5'	5'	6'	7'
	Centerline of pipe to floor	20"					
	Backflow allowance (includes both valves)	38"	40"	49"	49"	53"	56"
	Pressure Reducing Valve (PRV) allowance	11"	13"	18"	18"	25"	30"
A	Height of raised Access Door	6" min. to 12" max.					
	Access Door Opening	4' x 4'				5' x 5'	

* Assumes inlet flange is 9 in. from inlet wall.
Inlet & Outlet flanges must be 9 in. (min.) from pit wall.

Pit dimensions are inside dimensions.

Pipe restrained with Omni Sleeve
in each end of pit wall.

rev. 3-10-14

AQUA	
SINGLE SERVICE PIT DIMENSIONS (Dom.)	
Ck'd by MJF	Plan No. **D-4**

Single Service PIT Calculations - DOMESTIC

	Fitting	3"	4"	6"	Combination Dom-Fire 6"	8"	10"
	Inlet Flange	9	9	9	9	9	9
	Tee	11	13	16	16	18	22
	Valve	8	9	10.5	10.5	11.5	13
	Meter	33.25	33.25	36.5	45	53	68
	Tail Pc w/exp jt	13	13	13	13	13	13
	Valve	8	9	10.5	10.5	11.5	13
	Tee	11	13	16	16	18	22
	Outlet Flange	9	9	9	9	9	9
	Gaskets	0.75	0.75	0.75	0.75	0.75	0.75
	TOTAL (in)	103.0	109.0	121.3	129.8	143.8	169.8
	TOTAL (ft)	8.6	9.1	10.1	10.8	12.0	14.1
LP Standard	**FINAL (ft) min**	**9**	**9**	**10**	**11**	**12**	**15**
	"extra" inches	5.0	-1.0	-1.3	2.3	0.3	10.3
Watts 774 DCDA	Backflow (inc valves)	38	40	48.5	48.5	52	55.5
	Gaskets	0.25	0.25	0.25	0.25	0.25	0.25
	TOTAL (in)	141.3	149.3	170.0	178.5	196.0	225.5
	TOTAL (ft)	11.8	12.4	14.2	14.9	16.3	18.8
LP w/BF	**FINAL (ft) min**	**12**	**13**	**14**	**15**	**17**	**19**
	"extra" inches	2.8	6.8	-2.0	1.5	8.0	2.5
	Valve	8	9	10.5	10.5	11.5	13
	PRV	10.5	13	18	18	25	30
	Gaskets	0.25	0.25	0.25	0.25	0.25	0.25
	TOTAL (in)	121.8	131.3	150.0	158.5	180.5	213.0
	TOTAL (ft)	10.1	10.9	12.5	13.2	15.0	17.8
HP Standard	**FINAL (ft) min**	**10**	**11**	**13**	**14**	**15**	**18**
	"extra" inches	-1.8	0.8	6.0	9.5	-0.5	3.0
	Backflow (inc valves)	38	40	48.5	48.5	52	55.5
	Gaskets	0.25	0.25	0.25	0.25	0.25	0.25
	TOTAL (in)	160.0	171.5	198.8	207.3	232.8	268.8
	TOTAL (ft)	13.3	14.3	16.6	17.3	19.4	22.4
HP w/BF	**FINAL (ft) min**	**14**	**15**	**17**	**18**	**20**	**23**
	"extra" inches	8.0	8.5	5.3	8.8	7.3	7.3
	Front of Door Opening (in)	28	31	35.5	35.5	38.5	44
	Front of Door Opening (ft)	2.3	2.6	3.0	3.0	3.2	3.7
"D" LP	**Front of Door Opening (ft)**	**2**	**2**	**3**	**3**	**3**	**3**
	Front of Door Opening (in)	46.75	53.25	64.25	64.25	75.25	87.25
	Front of Door Opening (ft)	3.9	4.4	5.4	5.4	6.3	7.3
"D" HP	**Front of Door Opening (ft)**	**4**	**4**	**5**	**5**	**6**	**7**

AQUA		
Single Service Pit Calculations - DOMESTIC		
Ck'd by MJF	3/6/2014	Plan No. **D-5**

FIRE SERVICE LINES – 1", 1.5", and 2"

Residential ___ LOW PRESSURE (up to 100 psi) ___ HIGH PRESSURE (over 100 psi) See notes below.

Non-Residential ___ LOW PRESSURE (up to 150 psi) ___ HIGH PRESSURE (where pressure may exceed 150 psi) See notes below.

RPZA for systems with chemical additives (anti-freeze systems)
DCVA for systems with no chemical additives

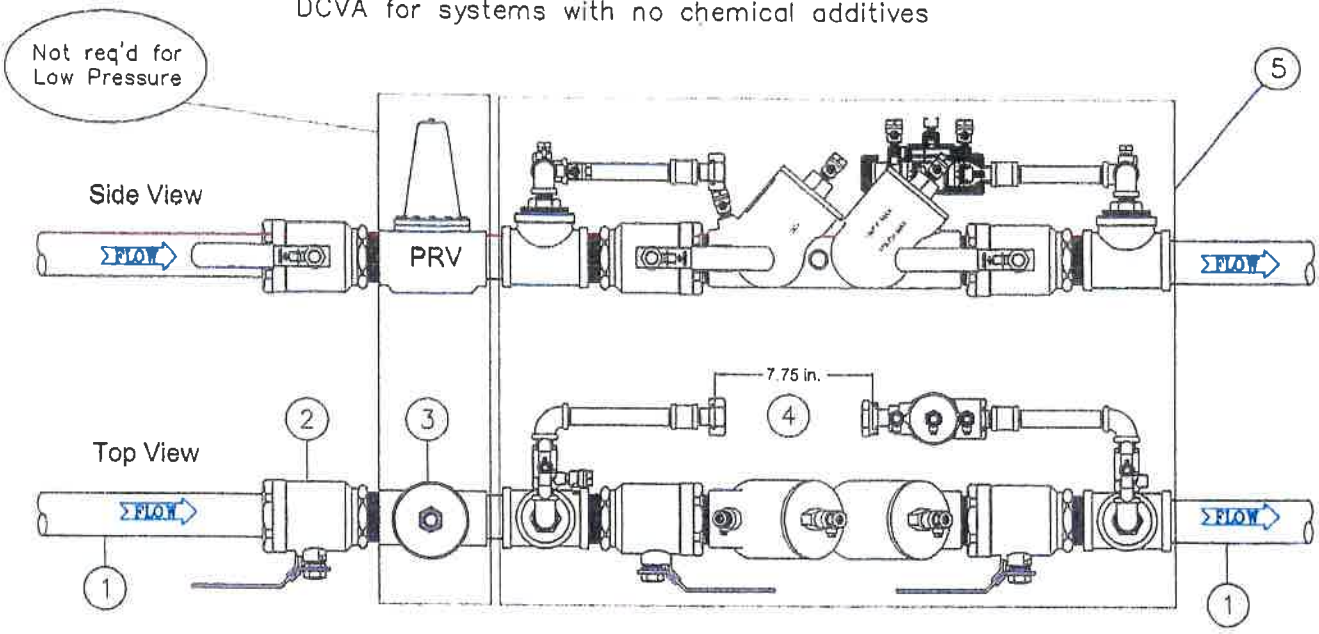

	ITEM			
1	Line Size ("K" copper) as approved by the Water Co.	1"	1.5"	2"
2	Full-port Ball Valve	1"	1.5"	2"
3	Pressure Reducing Valve (PRV)	SIZED BY CUSTOMER		
4	Meter (by Water Co)	5/8" x 3/4"	5/8" x 3/4"	5/8" x 3/4"
5	Backflow device - DCVA or RPZA	1"	1.5"	2"
	DCDA - Apollo Valves part No. (shown above)	Series 40-600		
	RPDA - Apollo Valves part No	Series 40-700		

Notes:

A. It is the CUSTOMER's responsibility to address THERMAL EXPANSION before the installation of a PRV or backflow device. All Fire systems should have a Pressure Relief Valve.

B. Water Company Rules & Regulations require that all of the specifications are met and a meter is set before water service is turned on.

C. It is the CUSTOMER's responsibility to size the pressure reducing valve(s) to fit their flow needs. Two-stage reduction may be needed where there is a wide variation between the initial pressure and the reduced pressure. Parallel installation may be needed where there is a wide variation of reduced pressure requirements, where it is vital to maintain a continuous water supply, or other reasons for improved performance.

D. Each part must be NSF/ANSI 61 (Annex F & G) compliant. Entire unit must be NSF/ANSI 372 compliant.

E. DCDA & RPDA Assemblies must be UL & FM approved.

rev. 3-13-14

AQUA	
Fire Service Lines 1", 1.5" & 2"	
ck'd by: MJF	Plan No. F 1

FIRE SERVICE LINES – 4", 6", 8", and 10"

"Closed System" has no fire hydrants

Residential __ LOW PRESSURE (up to 100 psi) __ HIGH PRESSURE (over 100 psi) See notes below.

Non-Residential __ LOW PRESSURE (up to 150 psi) __ HIGH PRESSURE (where pressure may exceed 150 psi) See note below.

RPZA for systems with chemical additives (anti-freeze systems)
DCVA for systems with no chemical additives

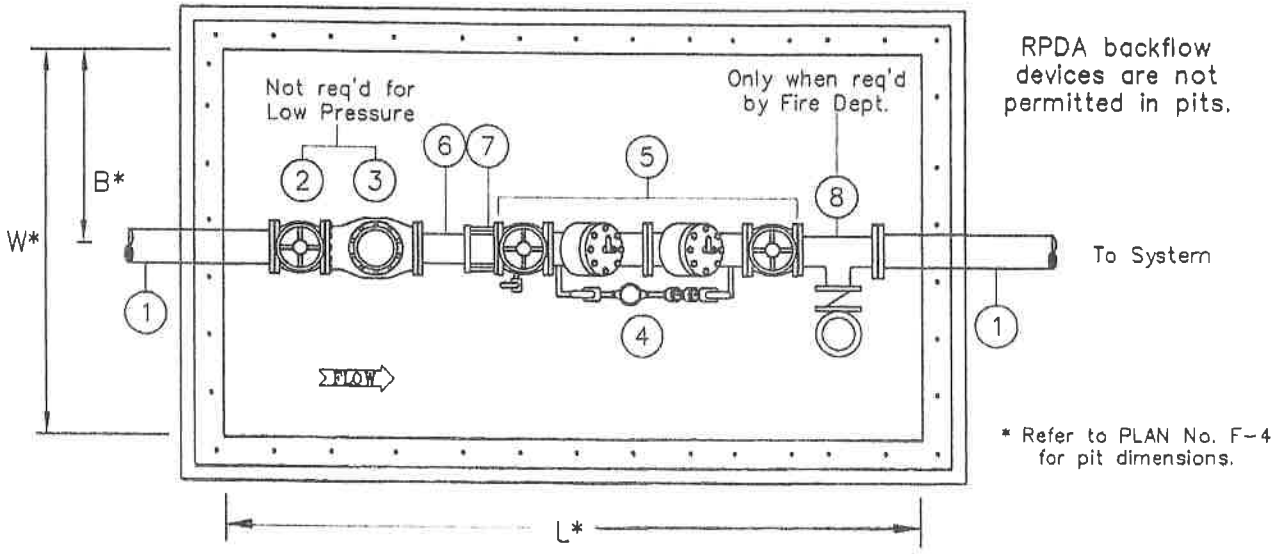

	ITEM				
1	Line Size (Cement-lined D.I.P.) as approved by Aqua	4"	6"	8"	10"
2	R.S. Gate Valve, O.S.&Y., Flanged	4"	6"	8"	10"
3	Pressure Reducing Valve (PRV)	SIZED BY CUSTOMER			
4	Meter (by Aqua)	5/8 x 3/4"	5/8 x 3/4"	5/8 x 3/4"	5/8 x 3/4"
5	Backflow Device Assembly - DCDA or RPDA	4"	6"	8"	10"
6	Spool Piece, Flg x PE - Length = 12 in. (min.)	4"	6"	8"	10"
7	Flanged Coupling Adapter	Ford Style FFCA or Smith-Blair Style 913			
8	Tee for FDC, only if req'd by local Fire Dept.	4"	6"	8"	10"
	Branchline sized by local Fire Department if required.	SIZED BY LOCAL FIRE DEPARTMENT			

Notes:

A. It is the CUSTOMER's responsibility to address THERMAL EXPANSION before the installation of a PRV or backflow device. All Fire systems should have a Pressure Relief Valve.

B. Water Company Rules & Regulations require that all of the specifications are met and a meter is set before water service is turned on.

C. It is the CUSTOMER's responsibility to size the pressure reducing valve(s) to fit their flow needs. Two-stage reduction may be needed where there is a wide variation between the initial pressure and the reduced pressure. Parallel installation may be needed where there is a wide variation of reduced pressure requirements, where it is vital to maintain a continuous water supply, or other reasons for improved performance.

D. Each part must be NSF/ANSI 61 (Annex F & G) compliant. Entire unit must be NSF/ANSI 372 compliant.

E. DCDA & RPDA Assemblies must be UL & FM approved.

rev. 3-13-14

AQUA	
"Closed" Fire Lines 4" to 10"	
ck'd by: MJF	Plan No. F-2

FIRE SERVICE LINES – 6", 8", and 10"

"Open System" has fire hydrants, meter pit is req'd

Non-Residential ___ LOW PRESSURE (up to 150 psi) ___ HIGH PRESSURE (where pressure may exceed 150 psi) See note below.

RPZA for systems with chemical additives (anti-freeze systems)
DCVA for systems with no chemical additives

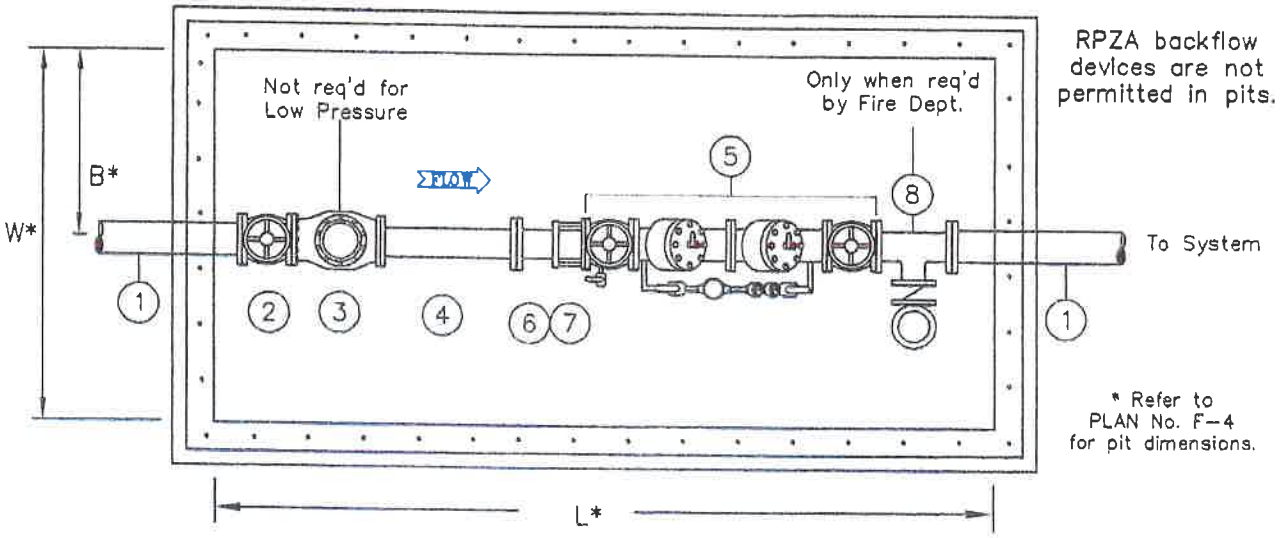

	ITEM				
1	Line Size (Cement-lined D.I.P.) as approved by Aqua		6"	8"	10"
2	R.S. Gate Valve, O.S.&Y., Flanged		6"	8"	10"
3	Pressure Reducing Valve (PRV)	SIZED BY CUSTOMER			
4	Meter (by Aqua)		45"	53"	68"
5	Backflow Device Assembly – DCDA or RPDA		6"	8"	10"
6	Spool Piece, Flg x PE – Length = 12 in. (min.)		6"	8"	10"
7	Flanged Coupling Adapter	Ford Style FFCA or Smith-Blair Style 913			
8	Tee for FDC, only if req'd by local Fire Dept.		6"	8"	10"
	Branchline sized by local Fire Department if required.	SIZED BY LOCAL FIRE DEPARTMENT			

Notes:

A. It is the CUSTOMER's responsibility to address THERMAL EXPANSION before the installation of a PRV or backflow device. All Fire systems should have a Pressure Relief Valve.

B. Water Company Rules & Regulations require that all of the specifications are met and a meter is set before water service is turned on.

C. It is the CUSTOMER's responsibility to size the pressure reducing valve(s) to fit their flow needs. Two-stage reduction may be needed where there is a wide variation between the initial pressure and the reduced pressure. Parallel installation may be needed where there is a wide variation of reduced pressure requirements, where it is vital to maintain a continuous water supply, or other reasons for improved performance.

D. Each part must be NSF/ANSI 61 (Annex F & G) compliant. Entire unit must be NSF/ANSI 372 compliant.

E. DCDA & RPDA Assemblies must be UL & FM approved.

rev. 3-13-14

AQUA	
'Open' Fire Lines 6" to 10"	
ck'd by: MJF	Plan No. F-3

SINGLE SERVICE PIT DIMENSIONS
for FIRE Service

TOP VIEW

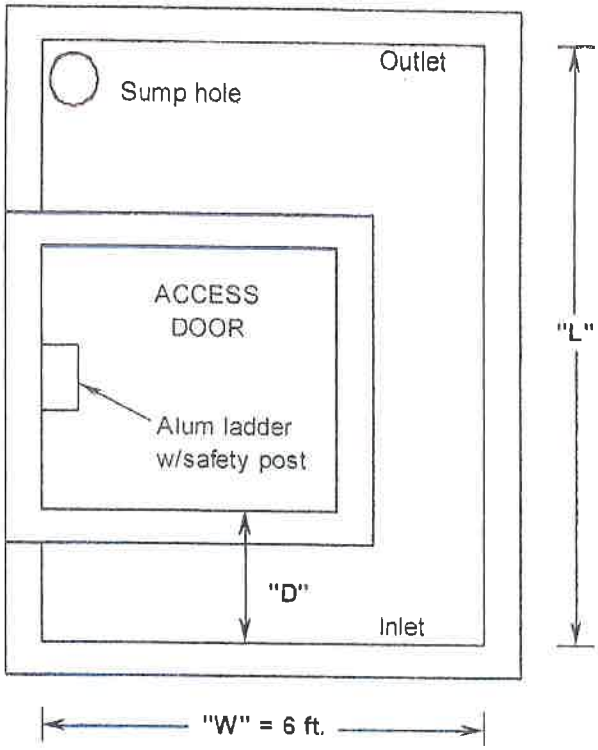

FRONT VIEW

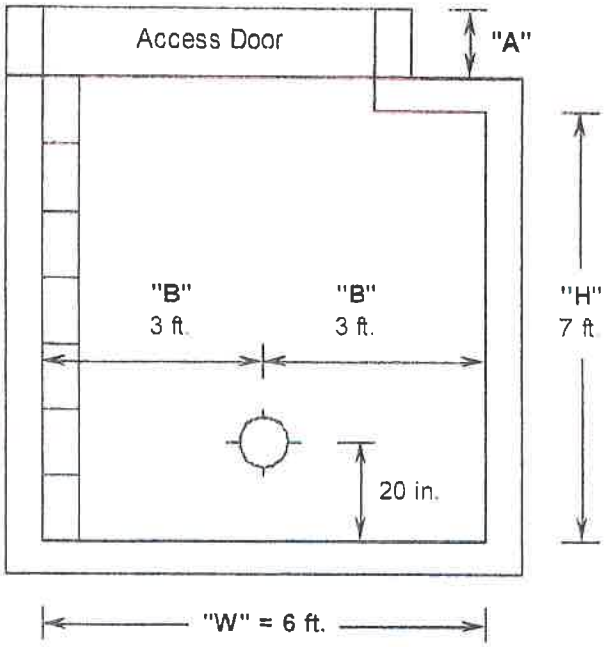

Refer to Plan DS-1 for additional notes.

		"Open System"			"Closed System"				
Dim	Description	6"	8"	10"	3"	4"	6"	8"	10"
L	Length - Low Pressure (LP)	12'	13'	14'	n/a	6'	7'	7'	8'
L	Length - Low Pressure w/ FDC	13'	14'	16'	n/a	7'	8'	9'	9'
L	Length - High Pressure (HP)	13'	15'	17'	n/a	8'	9'	10'	11'
L	Length - High Pressure w/ FDC	14	16	19'	n/a	9'	11'	12'	13'
W	Width	6 ft.			6 ft.				
H	Height	7 ft.			7 ft.				
B	Centerline of pipe to side wall	3 ft.			3 ft.				
D	* Front of Door Opening to Inlet Wall - LP	1'	1'	1'	n/a	1'	2'	2'	2'
D	* Front of Door Opening to Inlet Wall - HP	3'	3'	4'	n/a	2'	3'	3'	3'
	Centerline of pipe to floor	20" min - 24" max			20" min. to 24" max.				
	Backflow allowance (inc.both valves)	49"	53"	56"	n/a	40"	49"	53"	56"
A	Height of raised Access Door	6" min to 12" max			6" min. to 12" max.				
	Access Door Opening	4' x 4'			4' x 4'				

* Assumes inlet flange is 9 in. from inlet wall.
Outlet flange must be 9 in. (min.) from outlet wall.

Pit dimensions are indide dimensions.

Pipe restrained with Omni Sleeve
in each end of pit wall.

rev. 3-18-14

AQUA	
SINGLE SERVICE DIMENSIONS (Fire)	
Ck'd by: MJF	Plan No. F-4

Single Service PIT Calculations - FIRE

	Fitting	OPEN SYSTEM 6"	OPEN SYSTEM 8"	OPEN SYSTEM 10"	CLOSED SYSTEM 4"	CLOSED SYSTEM 6"	CLOSED SYSTEM 8"	CLOSED SYSTEM 10"
	Inlet Flange	9	9	9	9	9	9	9
	Valve	10.5	11.5	13				
	Meter	45	53	68				
	Tail Pc w/exp jt	13	13	13	13	13	13	13
Watts 774 DCDA	Backflow (inc valves)	48.5	52	55.5	40	48.5	52	55.5
	Outlet Flange	9	9	9	9	9	9	9
	Gaskets	0.5	0.5	0.5	0.25	0.25	0.25	0.25
	TOTAL (in)	135.5	148.0	168.0	71.3	79.8	83.3	86.8
	TOTAL (ft)	11.3	12.3	14.0	5.9	6.6	6.9	7.2
LP Standard	**FINAL (ft) min**	**12**	**13**	**14**	**6**	**7**	**7**	**8**
	"extra" inches	8.5	8.0	0.0	0.8	4.3	0.8	9.3
	Tee	16	18	22	13	16	18	22
	Gaskets	0.25	0.25	0.25	0.25	0.25	0.25	0.25
	TOTAL (in)	151.8	166.3	190.3	84.5	96.0	101.5	109.0
	TOTAL (ft)	12.6	13.9	15.9	7.0	8.0	8.5	9.1
LP Std. w/FDC	**FINAL (ft) min**	**13**	**14**	**16**	**7**	**8**	**9**	**9**
	"extra" inches	4.3	1.8	1.8	**-0.5**	0.0	6.5	**-1.0**
	Valve				9	10.5	11.5	13
	PRV	18	25	30	13	18	25	30
	Gaskets	0.25	0.25	0.25	0.25	0.25	0.25	0.25
	TOTAL (in)	153.8	173.3	198.3	93.5	108.5	120.0	130.0
	TOTAL (ft)	12.8	14.4	16.5	7.8	9.0	10.0	10.8
HP Standard	**FINAL (ft) min**	**13**	**15**	**17**	**8**	**9**	**10**	**11**
	"extra" inches	2.3	6.8	5.8	2.5	**-0.5**	0.0	2.0
	Tee	16	18	22	13	16	18	22
	Gaskets	0.25	0.25	0.25	0.25	0.25	0.25	0.25
	TOTAL (in)	170.0	191.5	220.5	106.8	124.8	138.3	152.3
	TOTAL (ft)	14.2	16.0	18.4	8.9	10.4	11.5	12.7
HP Std. w/FDC	**FINAL (ft) min**	**14**	**16**	**19**	**9**	**11**	**12**	**13**
	"extra" inches	**-2.0**	0.5	7.5	1.3	7.3	5.8	3.8
	Front of Door Opening (in)	19.5	20.5	22	9	9	9	9
	Front of Door Opening (ft)	1.6	1.7	1.8	0.8	0.8	0.8	0.8
"D" LP	**Front of Door Opening (ft)**	**1**	**1**	**1**	**0**	**0**	**0**	**0**
	Front of Door Opening (in)	37.5	45.5	52	22	28.5	36.5	43
	Front of Door Opening (ft)	3.1	3.8	4.3	1.8	2.4	3.0	3.6
"D" HP	**Front of Door Opening (ft)**	**3**	**3**	**4**	**0**	**0**	**0**	**0**

AQUA		
Single Service Pit Calculations - FIRE		
Ck'd by MJF	3/6/2014	Plan No. **F-5**

DUAL SERVICE PIT DIMENSIONS

For: Domestic lines up to 6"
Fire lines up to 10"

FRONT VIEW

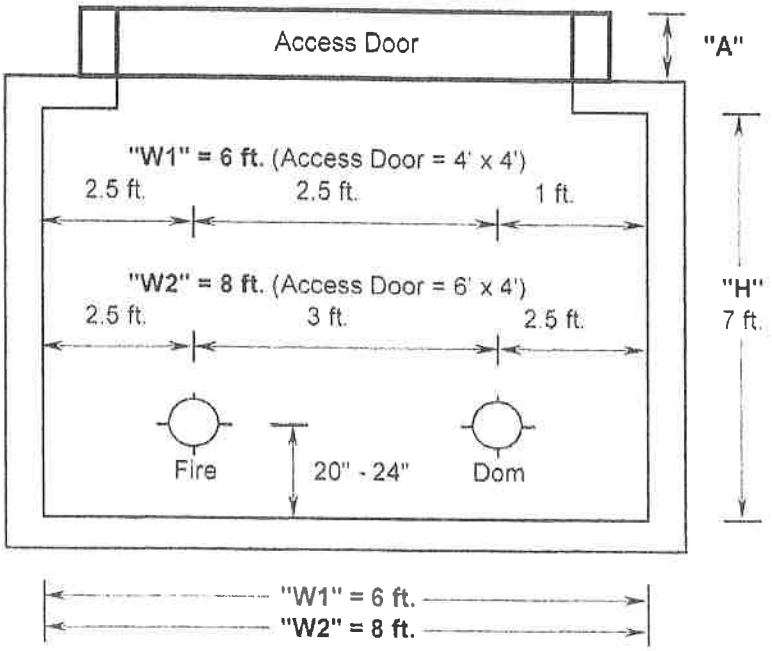

"A" (Riser Height) = **6 in. min.**
= **12 in. max.**

"H" (Height) = **7 ft.**

"L" (Length)
obtained using these steps:

1.) Determine the length of the pit needed for the Domestic service. Refer to Plan No. D-4.
2.) Determine the length of the pit needed for the Fire service. Refer to Plan No. F-4.
3.) Select the longer dimension from #1 & 2 above. This is the Length of the Dual Service Pit.

"W1" (Width) = **6 ft.**
for Domestic services 2" & smaller
Access Door = **4 ft. x 4 ft.**

"W2" (Width) = **8 ft.**
for Domestic services 3" & larger
Access Door = **6 ft. x 4 ft.**

"D" (Inside wall to door opening)
Use Single Service dimensions of Fire line. See Plan F-4. (Assumes inlet flange is 9" from wall)

TOP VIEW

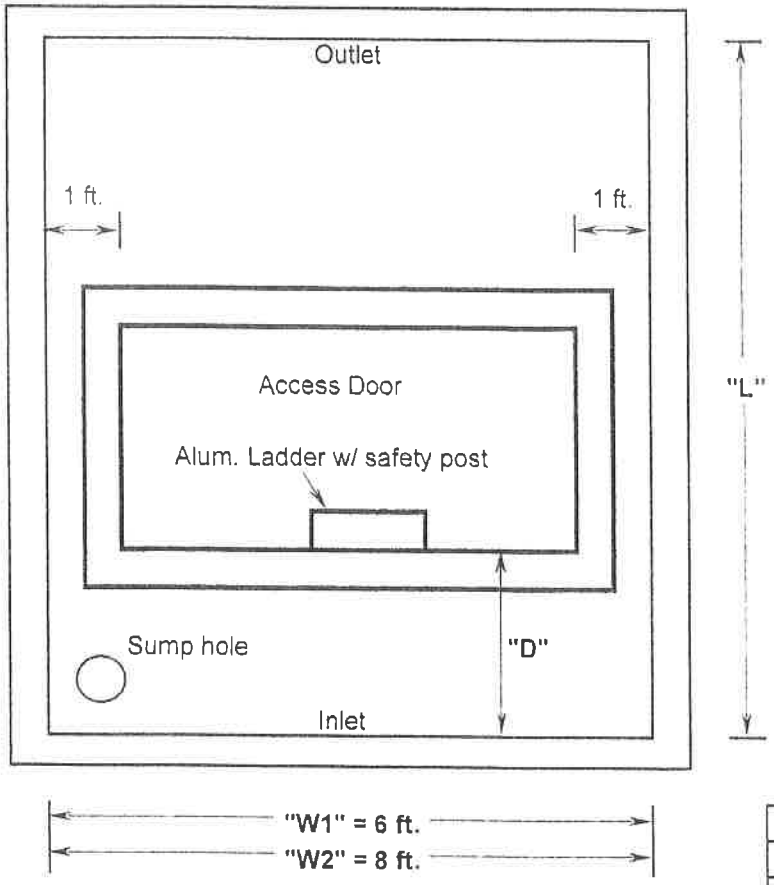

* Aluminum ladder w/ safety post to be centered between Fire & Dom lines on the inlet side of the pit.
* Doors must be centered directly over the FIRE meter.
* Doors may be recessed in the top of the pit or mounted on top of the pit.
* Grade must be sloped away from pit in all directions.
* Pipe restrained with Omni Sleeve in each end of pit wall.

AQUA		
DUAL SERVICE PIT DIMENSIONS		
Ck'd by MJF	3/6/2014	Plan No. **DS-1**

METER PIT DOOR DETAILS

ACCESS TO PIT (OPTION #1)

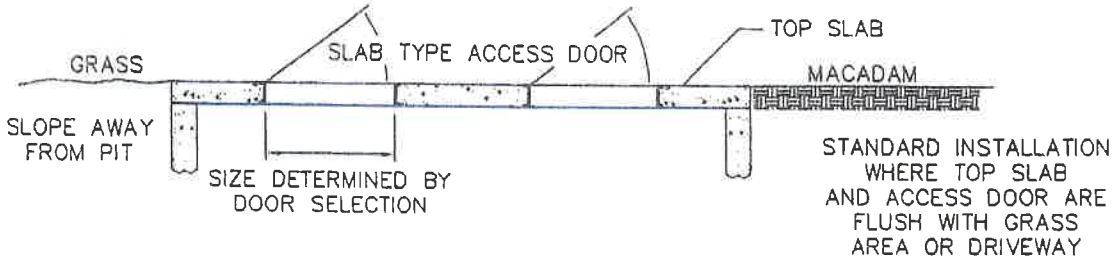

ACCESS TO PIT (OPTION #2)

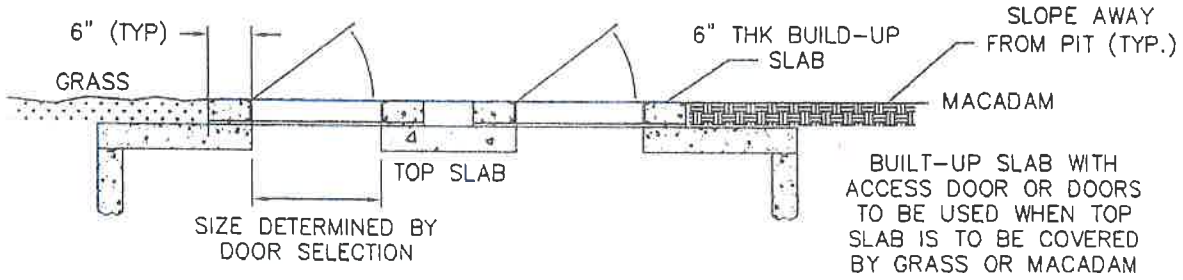

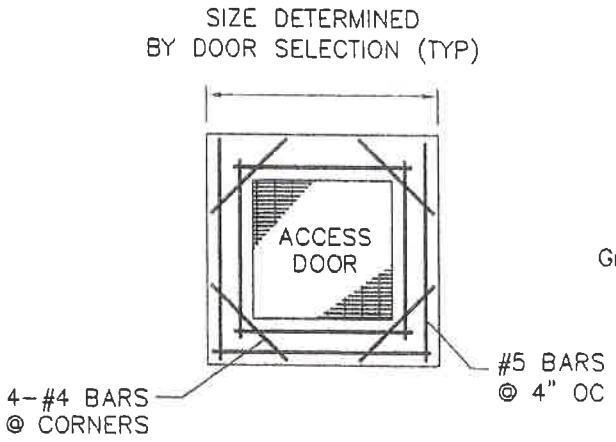

PLAN VIEW
BUILD-UP SLAB

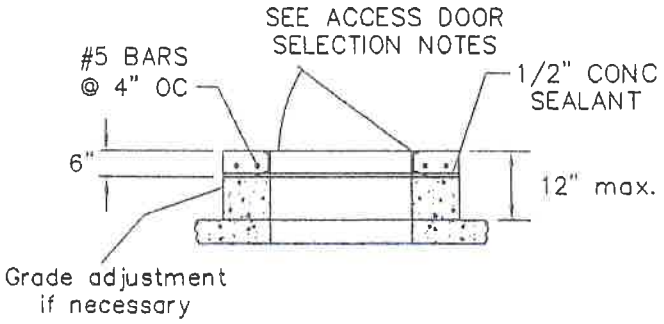

ELEVATION
BUILD-UP SLAB

AQUA	
Access Door Detail	
ck'd by: MJF	Plan No. P-1

rev. 06-10-13

PIPE SUPPORT

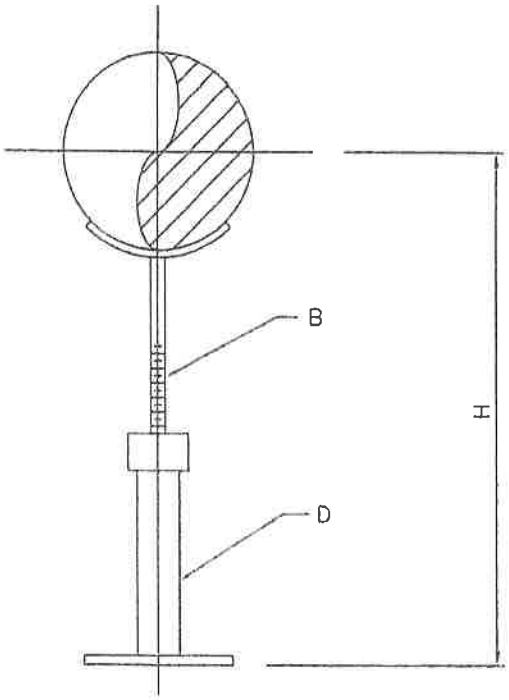

These pipe supports are made up of the following materials: The saddle is cut to size from heavy plate steel and forged to shape. The supporting column is steel pipe – see tables below and ANSI 125 pound companion flange forms the base.

For the adjustable support, the shank is solid steel rod, threaded. The pipe support is adjustable by means of a heavy steel nut mounted on a reinforced malleable iron cap covering the top of the support column.

NOTE: Flanged pipe supports are acceptable.

ADJUSTABLE PIPE SUPPORT
Length of threaded shanks will allow up to 6 inches for adjustment

Size of Pipe to be Supported – Inches		Dimentions of Materials Used				Size of Supporting Pipe D Inches	Height H Inches
		Saddle Inches	Shank B Inches		Flange OD Inches		
	OD		Size (min)	Length			
3	3.96	3/8 X 2	3/4 ROD	8	7 1/2	2 Std	20
4	4.80	3/8 X 2	3/4 ROD	8	9	2 Std	20
6	6.90	3/8 X 2	3/4 ROD	8	11	2 Std	20
8	9.05	1/2 X 2	3/4 ROD	8	13 1/2	2 Std	20
10	11.10	1/2 X 2	3/4 ROD	8	16	2 Std	20

AQUA

Pipe Support Detail

rev. 06-07-13

ck'd by: MJF

Plan No. P-2

ANCHOR & BLOCKING DETAILS

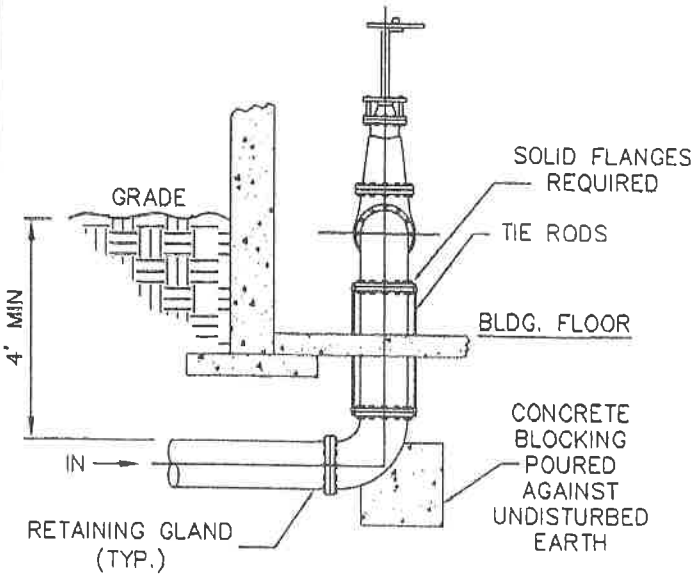

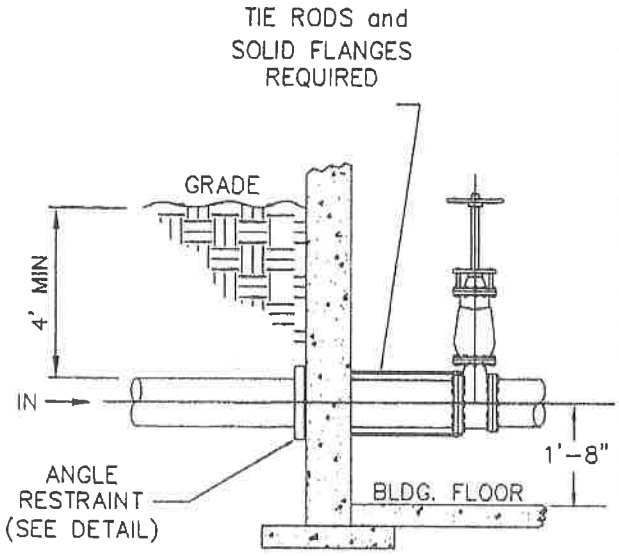

3"x 3"x 3/8" REACTION ANGLE IRON
OR 3" x 2" RECTANGULAR STRUCTURAL TUBE

MINIMUM OF (2) RODS PER FLANGE REQ'D.
ROD DIAMETER TO EQUAL BOLT SIZE DIAMETER.

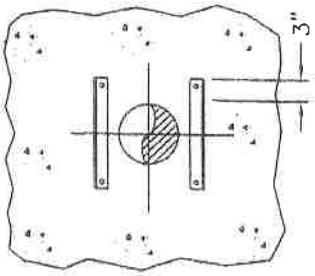

RESTRAINT FOR BUILDING

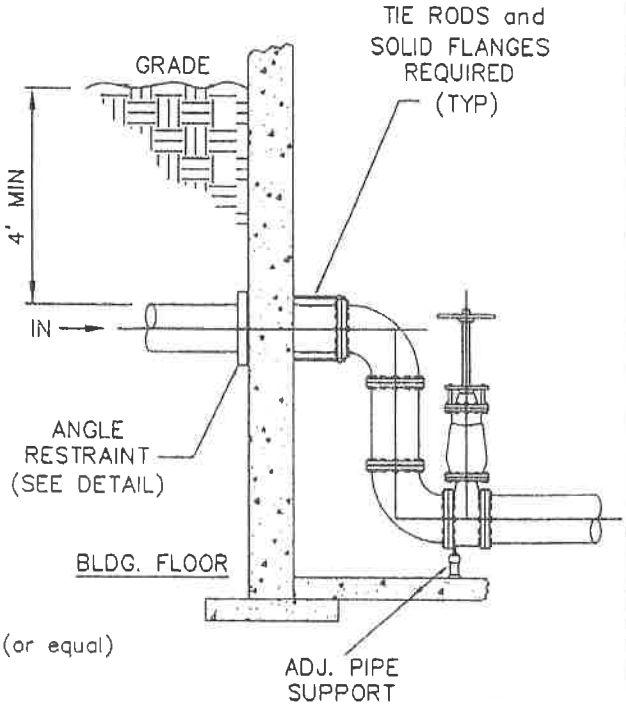

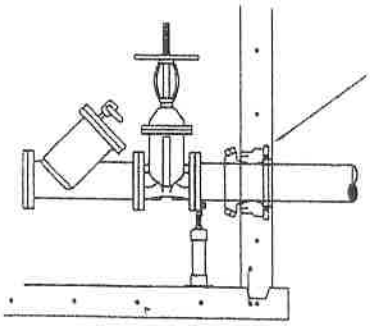

RESTRAINT FOR METER PIT

rev. 06-10-13

AQUA	
Anchor & Blocking Details	
ck'd by: MJF	Plan No. P-3

VERTICAL BACKFLOW INSTALLATIONS

This diagram shows an approved vertical installation for a Double Check Detector Assembly (DCDA) on Class 1 and 2 "Closed" Fire Sprinkler Systems.

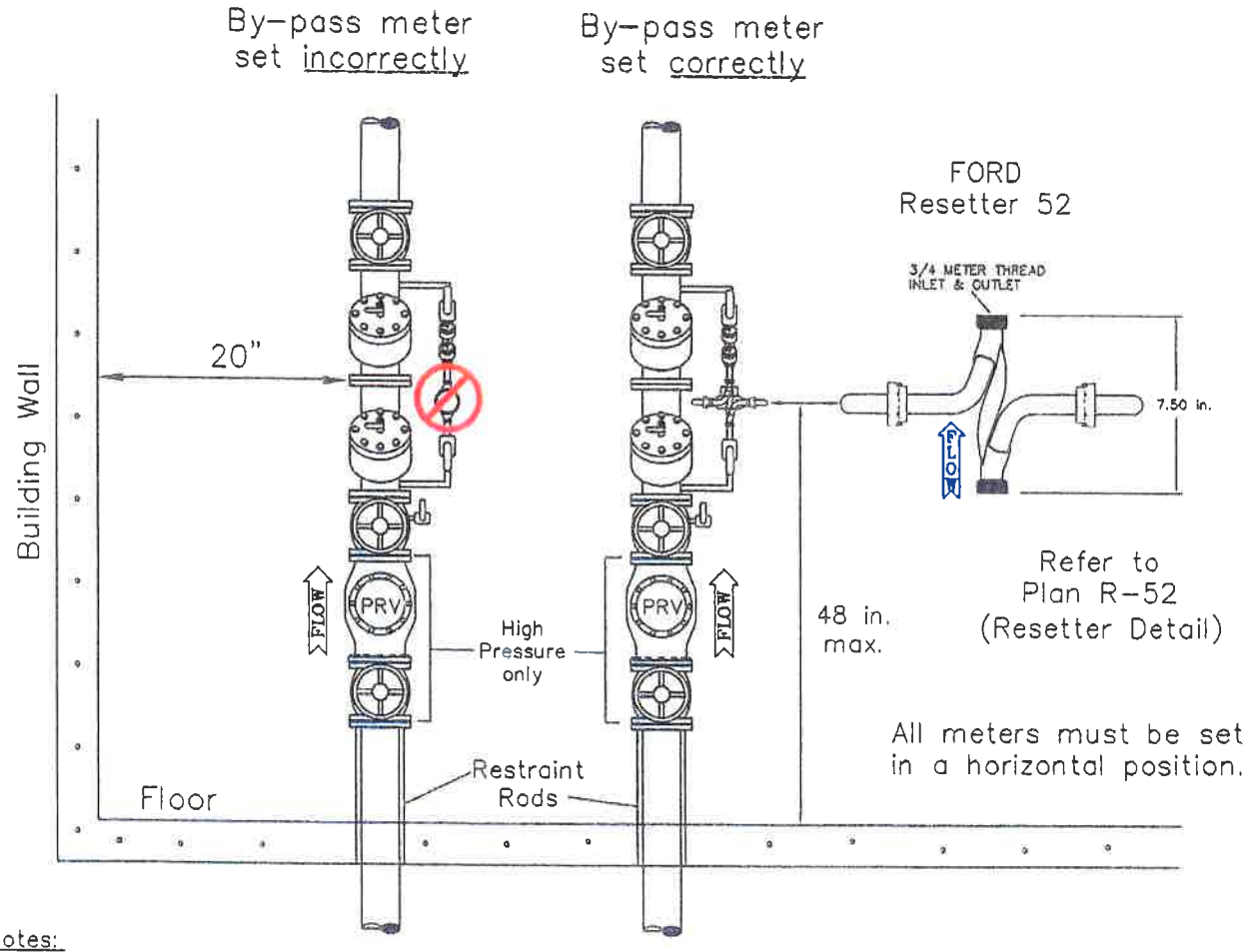

Notes:

A. Reduced Pressure Detector Assemblies (RPDA) are NOT approved for vertical installations. DCDA must be approved by the manufacturer for vertical installations.

B. RPZ & Vertical Installations are not approved in meter pits/vaults.

C. The Customer is required to have the meter resetter installed on all vertical backflow detector assemblies.

D. Water Company Rules & Regulations require that all of the specifications are met and a meter is set before water service is turned on.

E. It is the CUSTOMER's responsibility to size the pressure reducing valve(s) to fit their flow needs. Two-stage reduction may be needed where there is a wide variation between the initial pressure and the reduced pressure. Parallel installation may be needed where there is a wide variation of reduced pressure requirements, where it is vital to maintain a continuous water supply, or other reasons for improved performance.

F. Each part must be NSF/ANSI 61 (Annex F & G) compliant. Entire unit must be NSF/ANSI 372 compliant.

rev. 06-17-13

AQUA	
ck'd by: MJF	Plan No. BFV-1

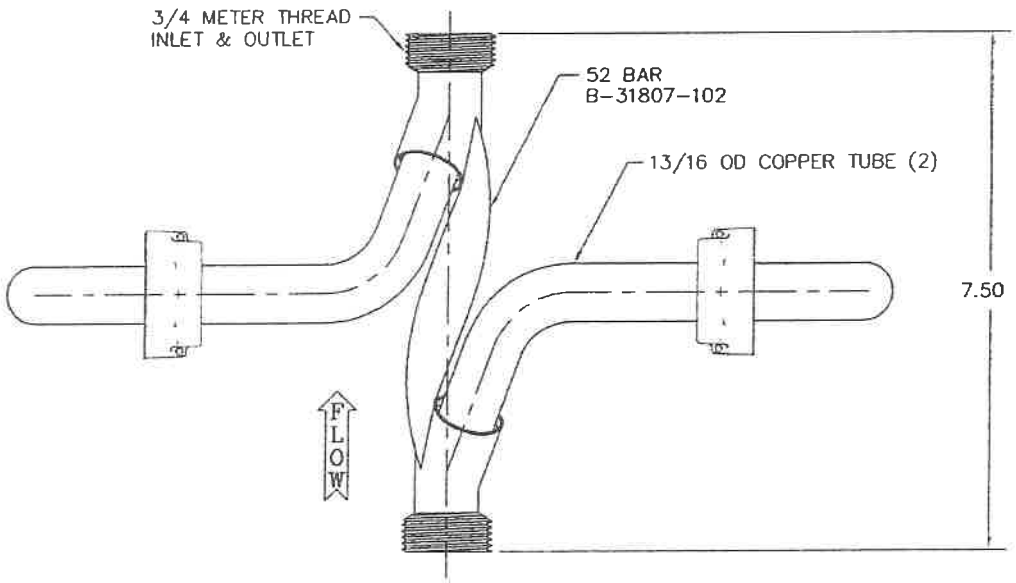

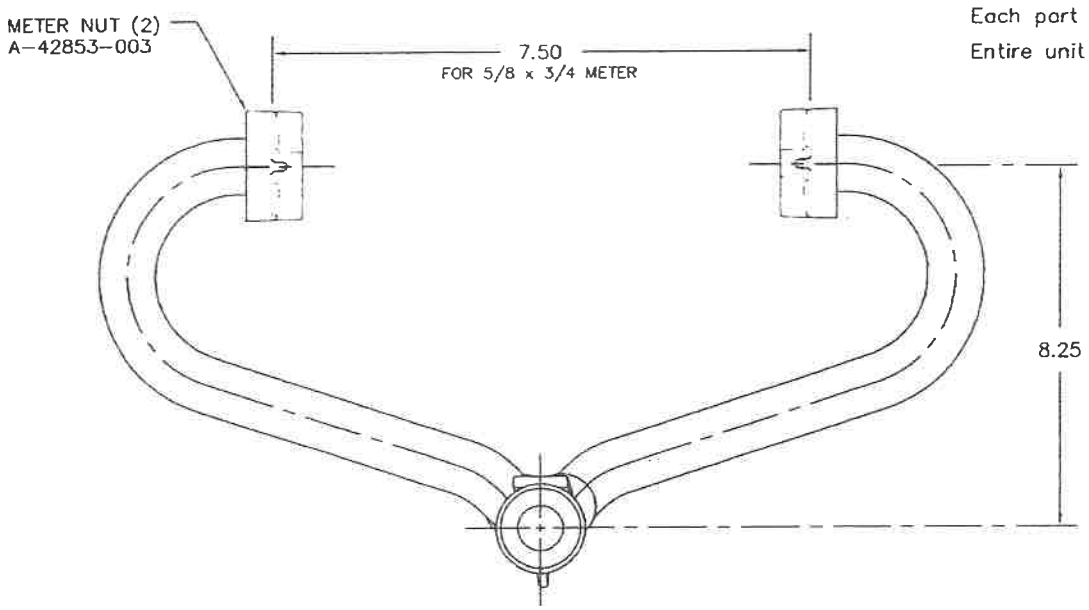

Each part must be NSF/ANSI 61, Annex F & G compliant.
Entire unit must be NSF/ANSI 372 compliant.

RESETTER-52

ASSY. BASEMENT RESETTER, 5/8 x 3/4 METER, PLAIN TUBE INLET & OUTLET		
REF. FORD METER BOX CO. DWG # B-95393-005		
DRAWN BY RWH	DATE 3-8-10	DRAWING NO. R-52
CHK'D BY MJF	SCALE 1/2=1	
AQUA		

Rev. 5-10-2013

Aqua PA Exhibit TMD-4-R
Valhora 9-Attachment 1

Witness: Todd Duerr
Date: 11/1/2021

AQUA PENNSYLVANIA, INC.
AQUA PENNSYLVANIA WASTEWATER, INC.

RESPONSE REQUEST
COMMISSIONER RALPH V. YANORA
PENNSYLVANIA PUBLIC UTILITY COMMISSION

DOCKET NOS. R-2021-3027385 & R-2021-3027386

---

10) Whether Aqua has evaluated its lost and unaccounted water performance since 2018 and any relevant results.

RESPONSE:

Yes, Aqua PA has reviewed its lost and unaccounted for water performance. In addition, the Commission's Bureau of Audits recently reviewed this in the 2020 Aqua PA Management Audit.

On an ongoing basis, a yearly audit is conducted using the AWWA water audit tool (Version 6.0). Aqua PA's performance exceeds industry medians for most Key Performance Indexes ("KPIs"). For example, Aqua PA's NRW has held steady since 2018 at 20.2%, plus or minus 0.01%. This results in a Real-Loss-Cost-Rate of just $6.39/connection/year which is below the median 30th percentile.

For further background, in Southeast PA, a leak survey is performed by three full-time leak survey technicians, one in each operating division office. Leak survey technicians normally perform leak survey 52 weeks a year by pipe plate, which is a systematic method of performing a survey on the entire system. The survey focuses on high-risk materials such as cast iron and stove pipe cement pipe. The objective is to survey 100% of the high-risk pipe in the system over a 15-month period. The leak survey technicians will also respond 24/7 to leaks in the system where Aqua PA crews are having trouble locating the source. Leak survey is also performed daily as the Company inspects hydrants, performs meter change outs or responds to service calls. The technician listens on the lines for leaks. Any suspected leaks are relayed to maintenance personnel, who then respond.

In 2019, in Southeast PA, the Company contracted with the remote-sensing data company, Utilis, to conduct a pilot study survey of select distribution systems. Utilis uses synthetic aperture radar satellite data along with their proprietary algorithm to specifically identify areas with soil moisture at a depth underground that often signifies drinking water leaks from pipes. The pilot is expected to conclude in 2022.

In Greater PA, a water loss analysis is performed using a form of AWWA Water Audit methodology. Greater PA employs a full-time leak locator who focuses primarily on the Northeastern areas. Leak detection is also outsourced to several contracted professionals throughout Greater PA, as needed. In order to take advantage of other "listening" opportunities, distribution field employees are equipped with acoustic leak detection equipment. Each time a field employee operates a fire hydrant, flushing device, distribution system valve or customer service valve ("curb stop"), the opportunity is taken to listen to the appurtenance, validate a suspected leak, and schedule a repair.

As noted in the testimony of AP Statement No. 1, Page 4, Lines 10 – 13, the Company's capital expenditures program for the years 2018 through 2021 year-to-date has been weighted toward water main replacement. The Company has approximately 5,800 miles of water main in the Commonwealth of Pennsylvania, and has been replacing, on average, over 100 miles per year for the last 10 years accounting for an average investment of approximately $100 - $150M per year. As a result of this investment, the Company has experienced a reduction in the number of main breaks in cold weather months and an overall tightening up of the system such that our recent unaccounted for water levels have been trending down. In addition, the Company has acquired many small/troubled systems and made significant improvements in their unaccounted for water through main replacement. In particular, the Phoenixville water systems were greatly improved. The aforementioned capital investments are in addition to the Company's investment of GIS software, which is used to track/monitor main break history and water aesthetic issues due to aging infrastructure.

APPENDIX E

Aqua Pennsylvania, Inc.
Residential Average Monthly Bill Comparison - Water
Docket Nos. R-2021-3027386 and R-2021-3027386

Current Rate Zone / Division	Current Rate Zone	New Rate Zone	Meter Size	Avg. Consumption	Present Rates	Proposed Rates	$ Change	% Change
Rate Zone 1 - Main Division	1	1	5/8"	4,000	$ 69.35	$ 81.32	$ 11.97	17.26%
CC Gardens & Sand Springs	1*	1	5/8"	4,000	$ 56.16	$ 81.32	$ 25.16	44.81%
Beech Mountain	1*	1*	5/8"	4,000	$ 33.82	$ 47.03	$ 13.21	39.07%
Bristol Township	1*	1*	5/8"	4,000	$ 40.85	$ 56.70	$ 15.85	38.80%
Mifflin Township	1*	1	5/8"	4,000	$ 53.75	$ 81.32	$ 27.57	51.30%
Mt. Jewett	1*	1	5/8"	4,000	$ 65.14	$ 81.32	$ 16.18	24.84%
Robin Hood Lakes	1*	1	5/8"	4,000	$ 56.33	$ 81.32	$ 24.99	44.37%
Chalfont	2	1	5/8"	4,000	$ 65.14	$ 81.32	$ 16.18	24.84%
Concord Park	2	1*	5/8"	4,000	$ 46.66	$ 64.66	$ 18.01	38.60%
Superior	2	1	5/8"	4,000	$ 69.35	$ 81.32	$ 11.97	17.26%
Treasure Lake	2	1*	5/8"	4,000	$ 42.70	$ 59.22	$ 16.52	38.68%
Oakland Beach, CS Water (Masthope), Eagle Rock	3	3	5/8"	4,000	$ 69.35	$ 81.32	$ 11.97	17.27%
Bunker Hill	Bunker Hill	Bunker Hill	5/8"	4,000	$ 27.95	$ 38.44	$ 10.49	37.53%
Sun Valley	Sun Valley	Sun Valley	5/8"	4,000	$ 20.96	$ 38.00	$ 17.04	81.28%
Phoenixville	Phoenixville	Phoenixville	5/8"	4,000	$ 15.33	$ 22.66	$ 7.33	47.78%

Based on 5/8" meter and an average consumption of 4,000 per month.

Where applicable, present rates includes DSIC at 7.50%.

*Consumption Charge Exceptions

Aqua Pennsylvania, Inc.
Commercial Average Monthly Bill Comparison - Water
Docket Nos. R-2021-3027386 and R-2021-3027386

Current Rate Zone / Division	Current Rate Zone	New Rate Zone	Meter Size	Avg. Consumption	Present Rates	Proposed Rates	$ Change	% Change
Rate Zone 1 - Main Division	1	1	5/8"	33,900	$ 414.74	$ 480.27	$ 65.53	15.80%
CC Gardens & Sand Springs	1*	1	5/8"	32,100	$ 340.27	$ 497.93	$ 157.66	46.33%
Beech Mountain	1*	1*	5/8"	45,200	$ 182.86	$ 300.74	$ 117.89	64.47%
Bristol Township	1*	1*	5/8"	11,400	$ 125.97	$ 191.28	$ 65.31	51.85%
Mifflin Township	1*	1	5/8"	16,000	$ 156.95	$ 248.63	$ 91.68	58.41%
Mt. Jewett	1*	1	5/8"	33,900	$ 414.74	$ 480.27	$ 65.53	15.80%
Chalfont	2	1	5/8"	6,000	$ 96.11	$ 111.28	$ 15.18	15.79%
Concord Park	2	1*	4"	434,800	$ 3,277.12	$ 5,179.10	$ 1,901.98	58.04%
Superior	2	1	5/8"	6,000	$ 96.11	$ 111.28	$ 15.18	15.79%
Treasure Lake	2	1*	5/8"	33,500	$ 214.90	$ 330.73	$ 115.84	53.90%
Oakland Beach, CS Water (Masthope), Eagle Rock	3	3	5/8"	14,100	$ 240.89	$ 276.47	$ 35.58	14.77%
Phoenixville	Phoenixville	Phoenixville	5/8"	19,100	$ 60.63	$ 89.70	$ 29.07	47.95%

Where applicable, present rates includes DSIC at 7.50%.

*Consumption Charge Exceptions

Aqua Pennsylvania, Inc.
Industrial Average Monthly Bill Comparison - Water
Docket Nos. R-2021-3027386 and R-2021-3027386

Current Rate Zone / Division	Current Rate Zone	New Rate Zone	Meter Size	Avg. Consumption	Present Rates	Proposed Rates	$ Change	% Change
Rate Zone 1	1	1	5/8"	201,400	$ 1,976.42	$ 2,288.93	$ 312.51	15.81%
Rate Zone 2	2	1	2"	201,400	$ 2,053.29	$ 2,445.63	$ 392.35	19.11%
Rate Zone 3	3	3	5/8"	36,800	$ 452.53	$ 521.58	$ 69.05	15.26%
Phoenixville	Phoenixville	Phoenixville	5/8"	3,600	$ 14.13	$ 20.88	$ 6.75	47.76%

Where applicable, present rates includes DSIC at 7.50%.

Aqua Pennsylvania, Inc.
Residential Average Monthly Bill Comparison - Wastewater
Docket Nos. R-2021-3027386 and R-2021-3027386

Current Rate Zone / Division	Current Rate Zone	New Rate Zone	Avg. Consumption	Present Rates	Proposed Rates	$ Change	% Change
RZ 1 - Bridlewood, Eagle Rock, Media	1	1	4,000	$ 64.47	$ 77.49	$ 13.02	20.20%
RZ 1A - Treasure Lake, Villiage at VF, Bunker Hill	1A	1A	4,000	$ 59.01	$ 77.49	$ 18.48	31.32%
RZ 1B - Penn Township	1B	1B	4,000	$ 64.05	$ 77.49	$ 13.44	20.99%
RZ 2 - Emlenton, Rivercrest, White Haven (Kidder)	2	1	4,000	$ 71.82	$ 77.49	$ 5.67	7.90%
RZ 3 - Beech Mountan Lakes, Deerfield Knoll, Laurel Lakes, Links at Gettysburg, Stony Creek, Thornhurst, and Willistown Woods	3	2	4,000	$ 84.00	$ 101.03	$ 17.03	20.27%
RZ 3 - Links of Gettysburg, Thornhurst Div, Laurel Lakes, Woodloch Springs Unmetered	3	2	Unmetered	$ 71.50	$ 101.03	$ 29.53	41.30%
RZ 4 - Honeycroft Village, Lake Harmony, New Daleville, Peddlers View, Tobyhanna Township, Twin Hills Unmetered	4	3	Unmetered	$ 105.00	$ 125.00	$ 20.00	19.05%
RZ 5 - East Bradford (Brandywine), Little Washington, Greens at Penn Oaks, Sage Hill and Plumsock	5	4	4,000	$ 118.02	$ 141.94	$ 23.92	20.27%
RZ 5 - Newlin Green	5	4	4,000	$ 147.00	$ 141.94	$ (5.06)	-3.44%
RZ 5 - Sage Hill	5	4	4,000	$ 189.00	$ 141.94	$ (47.06)	-24.90%
RZ 6 - Masthope	6	5	4,000	$ 45.82	$ 55.15	$ 9.33	20.36%
RZ 7 - Limerick	7	7	4,000	$ 39.73	$ 72.94	$ 33.22	83.61%
RZ 8 - East Bradford - Single Family Home	8 (Unmetered)	8 (Metered)	4,000	$ 71.49	$ 83.42	$ 11.93	16.68%
RZ 8 - East Bradford - Townhome	8 (Unmetered)	8 (Metered)	4,000	$ 55.36	$ 83.42	$ 28.06	50.70%
RZ 9 - Cheltenham	9	9	4,000	$ 36.53	$ 49.34	$ 12.81	35.07%
RZ 10 - East Norriton	10	10	4,000	$ 38.52	$ 58.53	$ 20.01	51.94%
RZ 10 - East Norriton - Whitpain	10	10	4,000	$ 31.66	$ 58.53	$ 26.87	84.87%
RZ 11 - New Garden	11	11	4,000	$ 73.03	$ 100.34	$ 27.31	37.40%

Where applicable, present rates includes DSIC at 5.00%.

All Residential Customers are charged a customer charge on an EDU basis with the exception of the Media, Treasure Lake, Village at Valley Forge and Plumsock Divisions, which are customer charge based on the appropriate meter size of the applicable Rate Zone. The rates above represent a 5/8" meter or 1 EDU.

As per the Asset Purchase Agreement, the East Norriton Division rate increase will not become effective until July 1, 2022.

Aqua Pennsylvania, Inc.
Commercial Average Monthly Bill Comparison - Wastewater
Docket Nos. R-2021-3027386 and R-2021-3027386

Current Rate Zone / Division	Current Rate Zone	New Rate Zone	Avg. Consumption	Present Rates	Proposed Rates	$ Change	% Change
RZ 1 - Bridlewood, Eagle Rock, Media	1	1	39,400	$ 346.96	$ 417.26	$ 70.30	20.26%
RZ 1A - Treasure Lake, Villiage at VF, Bunker Hill	1A	1A	39,400	$ 293.18	$ 417.26	$ 124.08	42.32%
RZ 1B - Penn Township	1B	1B	39,400	$ 484.58	$ 417.26	$ (67.31)	-13.89%
RZ 2 - Emlenton, Rivercrest, White Haven (Kidder)	2	1	39,400	$ 372.90	$ 417.26	$ 44.36	11.90%
RZ 3 - Beech Mountan Lakes, Deerfield Knoll, Laurel Lakes, Links at Gettysburg, Stony Creek, Thornhurst, and Willistown Woods	3	2	39,400	$ 399.95	$ 481.01	$ 81.06	20.27%
RZ 4 - Honeycroft Village, Lake Harmony, New Daleville, Peddlers View, Tobyhanna Township, Twin Hills Unmetered	4	3	Unmetered (Per EDU)	$ 105.00	$ 105.00	$ -	0.00%
RZ 5 - East Bradford (Brandywine), Little Washington, Greens at Penn Oaks, Sage Hill and Plumsock	5	4	39,400	$ 785.65	$ 944.90	$ 159.24	20.27%
RZ 5 - Avon Grove School District	5	4	Flat	$ 8,695.31	$ 10,503.71	$ 1,808.40	20.80%
RZ 6 - Masthope	6	5	39,400	$ 82.99	$ 99.86	$ 16.87	20.33%
RZ 7 - Limerick	7	7	5,800	$ 51.89	$ 88.00	$ 36.11	69.60%
RZ 8 - East Bradford	8	8	44,500	$ 335.21	$ 532.16	$ 196.95	58.75%
RZ 9 - Cheltenham	9	9	3,200	$ 33.40	$ 45.12	$ 11.71	35.07%
RZ 10 - East Norriton	10	10	24,500	$ 220.00	$ 192.60	$ (27.40)	-12.45%
RZ 11 - New Garden	11	11	39,400	$ 939.43	$ 1,290.78	$ 351.35	37.40%

Where applicable, present rates includes DSIC at 5.00%.

All Residential Customers are charged a customer charge on an EDU basis with the exception of the Media, Treasure Lake, Village at Valley Forge and Plumsock Divisions, which are customer charge based on the appropriate meter size of the applicable Rate Zone. The rates above represent a 5/8" meter or 1 EDU.

As per the Asset Purchase Agreement, the East Norriton Division rate increase will not become effective until July 1, 2022.

Aqua Pennsylvania, Inc.
Industrial Average Monthly Bill Comparison - Wastewater
Docket Nos. R-2021-3027386 and R-2021-3027386

Current Rate Zone / Division	Current Rate Zone	New Rate Zone	Avg. Consumption	Present Rates	Proposed Rates	$ Change	% Change
RZ 1 - Media	1	1	3,700	$ 62.08	$ 74.61	$ 12.54	20.20%

Where applicable, present rates includes DSIC at 5.00%.

All Residential Customers are charged a customer charge on an EDU basis with the exception of the Media, Treasure Lake, Village at Valley Forge and Plumsock Divisions, which are customer charge based on the appropriate meter size of the applicable Rate Zone. The rates above represent a 5/8" meter or 1 EDU.

As per the Asset Purchase Agreement, the East Norriton Division rate increase will not become effective until July 1, 2022.

Aqua Pennsylvania, Inc.
Current and Proposed Rates

	Zone 1			Zone 2		
	Current Rates	Proposed Rates	Change	Current Rates	Proposed Rates	
RESIDENTIAL						
Customer Charges:						
5/8	18.00	22.40	24.4%	18.00	22.40	24.4%
3/4	30.90	38.50	24.6%	23.90	38.50	61.1%
1	52.50	65.30	24.4%	39.40	65.30	65.7%
1-1/2	101.10	125.80	24.4%	63.70	125.80	97.5%
2	143.90	179.10	24.5%	89.50	179.10	100.1%
3	289.00	360.00	24.6%	125.00	360.00	188.0%
4	470.00	585.00	24.5%	287.50	585.00	103.5%
6	970.00	1,207.00	24.4%	970.00	1,207.00	24.4%
8	1,697.00	2,112.00	24.5%	1,697.00	2,112.00	24.5%
10	2,508.00	3,121.00	24.4%	2,508.00	3,121.00	24.4%
12	3,037.50	3,780.00	24.4%			
5/8,3/4	20.21	24.61	21.8%	20.21	24.61	21.8%
5/8,1	20.56	24.96	21.4%			
5/8,1-1/2	23.89	28.29	18.4%	23.89	28.29	
5/8,2	26.00	30.40	16.9%	26.00	30.40	
3/4,1	33.46	41.06	22.7%	33.46	33.46	
3/4,1-1/2	36.79	44.39	20.7%			
3/4,2	38.90	46.50	19.5%			
1,1	55.06	67.86	23.2%			
1,1-1/2	58.39	71.19	21.9%			
1,2	60.50	73.30	21.2%			
1-1/2,1	97.76	110.56	13.1%			
1-1/2,1-1/2	101.09	113.89	12.7%			
1-1/2,2	103.20	116.00	12.4%			
2,1-1/2	136.59	149.39	9.4%			
2,2	138.70	151.50	9.2%			
Consumption Charges:						
1st block	1.0649	1.3490	26.7%	1.0649	1.3490	26.7%
2nd block	1.2608	1.5971	26.7%	1.2608	1.5971	50.0%
3rd block						
CC Gardens & Sand Springs						
1st block	0.7820	1.3490	72.5%			
2nd block	0.9300	1.5971	71.7%			
Beech Mountain	0.3365	0.6158	83.0%			
Bristol Township	0.5000	0.8575	71.5%			
Mifflin Township	0.8000	1.3490	68.6%			
Mt. Jewett	1.0649	1.3490	26.7%			
Robin Hood Lakes	0.8600	1.3490	56.9%			
Chalfont				1.0649	1.3490	26.7%
Concord Park				0.6350	1.0566	66.4%
Treasure Lake				0.5430	0.9204	69.5%
Block Size (100 gallons)						
First	20	20			20	
Over	20	20			20	

Aqua Pennsylvania, Inc.
Current and Proposed Rates

	Zone 1			Zone 2		
	Current Rates	Proposed Rates	Change	Current Rates	Proposed Rates	
COMMERCIAL						
Customer Charges:						
5/8	18.00	22.40	24.4%	18.00	22.40	24.4%
3/4	30.90	38.50	24.6%	23.90	38.50	61.1%
1	52.50	65.30	24.4%	39.40	65.30	65.7%
1-1/2	101.10	125.80	24.4%	63.70	125.80	97.5%
2	143.90	179.10	24.5%	89.50	179.10	100.1%
3	289.00	360.00	24.6%	125.00	360.00	188.0%
4	470.00	585.00	24.5%	287.50	585.00	103.5%
6	970.00	1,207.00	24.4%	970.00	1,207.00	24.4%
8	1,697.00	2,112.00	24.5%	1,697.00	2,112.00	24.5%
10	2,508.00	3,121.00	24.4%	2,508.00	3,121.00	
12	3,037.50	3,780.00	24.4%			
Consumption Charges:						
1st block	1.1900	1.4814	24.5%	1.1900	1.4814	24.5%
2nd block	1.0455	1.3015	24.5%	1.0455	1.3015	24.5%
3rd block	0.8673	1.0798	24.5%	0.8673	1.0798	24.5%
4th block	0.7938	0.9883	24.5%	0.7938	0.9883	24.5%
5th block	-					
6th block	-					
CC Gardens & Sand Springs	0.9300	1.4814	59.3%			
Beech Mountain	0.3365	0.6158	83.0%			
Bristol Township	0.8700	1.4814	70.3%			
Mifflin Township	0.8000	1.3490	68.6%			
Concord Park				0.6350	1.0566	66.4%
Treasure Lake				0.5430	0.9204	69.5%
Block Size (100 gallons)						
First	100			100		
Next	233			233		
Next	3,000			3,000		
Over	3,333			3,333		
INDUSTRIAL						
Customer Charges:						
5/8	18.00	22.40	24.4%	18.00	22.40	24.4%
3/4	30.90	38.50	24.6%	23.90	38.50	61.1%
1	52.50	65.30	24.4%	39.40	65.30	65.7%
1-1/2	101.10	125.80	24.4%	63.70	125.80	97.5%
2	143.90	179.10	24.5%	89.50	179.10	100.1%
3	289.00	360.00	24.6%	125.00	360.00	188.0%
4	470.00	585.00	24.5%	287.50	585.00	103.5%
6	970.00	1,207.00	24.4%	970.00	1,207.00	24.4%
8	1,697.00	2,112.00	24.5%	1,697.00	2,112.00	24.5%
10	2,508.00	3,121.00	24.4%	2,508.00	3,121.00	24.4%
12	3,037.50	3,780.00	24.4%			
Consumption Charges:						
1st block	1.1900	1.4814	24.5%	1.1900	1.4814	24.5%
2nd block	1.0455	1.3015	24.5%	1.0455	1.3015	24.5%
3rd block	0.8673	1.0798	24.5%	0.8673	1.0798	24.5%
4th block	0.7938	0.9883	24.5%	0.7938	0.9883	24.5%
5th block	0.7455	0.9866	32.3%	0.7455	0.9866	32.3%
6th block	0.5963	0.7892	32.3%	0.5963	0.7892	32.3%
First	100			100		
Next	233			233		
Next	3000			3000		
Next	30,000			30,000		
Next	66,667			66,667		
Over	100,000			100,000		

Aqua Pennsylvania, Inc.
Current and Proposed Rates

		Zone 1			Zone 2		
		Current Rates	Proposed Rates	Change	Current Rates	Proposed Rates	
Public							
Customer Charges:							
5/8		18.00	22.40	24.4%	18.00	22.40	24.4%
3/4		30.90	38.50	24.6%	23.90	38.50	61.1%
1		52.50	65.30	24.4%	39.40	65.30	65.7%
1-1/2		101.10	125.80	24.4%	63.70	125.80	97.5%
2		143.90	179.10	24.5%	89.50	179.10	100.1%
3		289.00	360.00	24.6%	125.00	360.00	188.0%
4		470.00	585.00	24.5%	287.50	585.00	103.5%
6		970.00	1,207.00	24.4%	970.00	1,207.00	24.4%
8		1,697.00	2,112.00	24.5%	1,697.00	2,112.00	24.5%
10		2,508.00	3,121.00	24.4%	2,508.00	3,121.00	
5/8,1-1/2		23.89	30.40	27.2%			
Consumption Charges:							
1st block		1.1900	1.4814	24.5%	1.1900	1.4814	24.5%
2nd block		1.0455	1.3015	24.5%	1.0455	1.3015	24.5%
3rd block		0.8573	1.0674	24.5%	0.8573	1.0674	24.5%
4th block		0.7847	0.9769	24.5%	0.7847	0.9769	24.5%
CC Gardens & Sand Springs		0.9300	1.1781	26.7%			
Beech Mountain		0.3650	0.4624	26.7%			
Bristol Township		0.8700	1.1021	26.7%			
Mifflin Township		0.8000	1.0134	26.7%			
Concord Park					0.6350	1.0566	66.4%
Treasure Lake							
First		100			100		
Next		233			233		
Next		3,000			3,000		
Over		3,333			3,333		
Sales to Other Water Utilities							
Customer Charges:							
5/8		18.00	22.40	24.4%	18.00	18.00	0.0%
3/4		30.90	38.50	24.6%	23.90	23.90	0.0%
1		52.50	65.30	24.4%	39.40	39.40	0.0%
1-1/2		101.10	125.80	24.4%	63.70	63.70	0.0%
2		143.90	179.10	24.5%	89.50	89.50	0.0%
3		289.00	360.00	24.6%	125.00	125.00	0.0%
4		470.00	585.00	24.5%	287.50	287.50	0.0%
6		970.00	1,207.00	24.4%	970.00	970.00	0.0%
8		1,697.00	2,112.00	24.5%	1,697.00	1,697.00	0.0%
10		2,508.00	3,121.00	24.4%	2,508.00	2,508.00	0.0%
12		3,037.50	3,780.00	24.4%			
Consumption Charges:	0.9885						
All Usage		1.1900	1.4814	24.5%	1.1900	1.4814	24.5%
UNMETERED							
Zone 1, 2 and 3		65.52	83.00	26.7%	65.52	65.52	0.0%
Sun Valley		19.50	18.00	-7.7%			
Volumetric Rate			0.5000				
Belle Aire		50.00	70.00	40.0%			

Aqua Pennsylvania, Inc.
Current and Proposed Rates

	Zone 3			Bunker Hill			Phoenixville		
	Current Rates	Proposed Rates		Current Rates	Proposed Rates		Current Rates	Proposed Rates	
RESIDENTIAL									
Customer Charges:							********Monthly********		
5/8	28.00	32.40	15.7%	8.00	11.80	47.5%	3.33	4.90	47.0%
3/4	28.00	32.40	15.7%				3.33	4.90	47.0%
1	52.50	65.30	24.4%				6.67	9.90	48.5%
1-1/2	101.10	125.80	24.4%				11.67	17.30	48.3%
2	143.90	179.10	24.5%				25.00	37.00	48.0%
3	289.00	360.00	24.6%				41.67	61.70	48.1%
4	470.00	585.00	24.5%				83.33	123.30	48.0%
6	970.00	1,207.00	24.4%				133.33	197.30	48.0%
8	1,697.00	2,112.00	24.5%				283.33	419.30	48.0%
10	2,508.00	3,121.00	24.4%						
12									
5/8,3/4									
5/8,1									
5/8,1-1/2									
5/8,2									
3/4,1									
3/4,1-1/2									
3/4,2									
1,1									
1,1-1/2									
1,2									
1-1/2,1									
1-1/2,1-1/2									
1-1/2,2									
2,1-1/2									
2,2									
Consumption Charges:									
1st block	0.9128	1.2231	34.0%	0.4500	0.6660	48.0%	0.3000	0.4440	48.0%
2nd block	1.2608	1.5971	26.7%				0.2450	0.3626	48.0%
3rd block							0.2000	0.2960	48.0%
CC Gardens & Sand Springs									
1st block									
2nd block									
Beech Mountain									
Bristol Township									
Mifflin Township									
Mt. Jewett									
Robin Hood Lakes									
Chalfont									
Concord Park									
Treasure Lake									
Block Size (100 gallons)									
First	40	40		0			10000	10000	
Over	40	40		0			40000	40000	

Aqua Pennsylvania, Inc.
Current and Proposed Rates

	Zone 3			Bunker Hill		Phoenixville		
	Current Rates	Proposed Rates		Current Rates	Proposed Rates	Current Rates	Proposed Rates	
COMMERCIAL								
Customer Charges:								
5/8	28.00	32.40	15.7%			3.33	4.90	47.0%
3/4	28.00	32.40	15.7%			3.33	4.90	47.0%
1	52.50	65.30	24.4%			6.67	9.90	48.5%
1-1/2	101.10	125.80	24.4%			11.67	17.30	48.3%
2	143.90	179.10	24.5%			25.00	37.00	48.0%
3	289.00	360.00	24.6%			41.67	61.70	48.1%
4	470.00	585.00	24.5%			83.33	123.30	48.0%
6	970.00	1,207.00	24.4%			133.33	197.30	48.0%
8	1,697.00	2,112.00	24.5%			283.33	419.30	48.0%
10	2,508.00	3,121.00	24.4%					
12								
Consumption Charges:								
1st block	1.1900	1.4814	24.5%			0.3000	0.4440	48.0%
2nd block	1.0455	1.3015	24.5%			0.2450	0.3626	48.0%
3rd block	0.8673	1.0798	24.5%			0.2000	0.2960	48.0%
4th block	0.7938	0.9883	24.5%					
5th block								
6th block								
CC Gardens & Sand Springs								
Beech Mountain								
Bristol Township								
Mifflin Township								
Concord Park								
Treasure Lake								
Block Size (100 gallons)								
First	100					100		
Next	233					233		
Next	3,000					3,000		
Over	3,333					3,333		
INDUSTRIAL								
Customer Charges:								
5/8	28.00	32.40	15.7%			3.33	4.90	47.0%
3/4	28.00	32.40	15.7%			3.33	4.90	47.0%
1	52.50	65.30	24.4%			6.67	9.90	48.5%
1-1/2	101.10	125.80	24.4%			11.67	17.30	48.3%
2	143.90	179.10	24.5%			25.00	37.00	48.0%
3	289.00	360.00	24.6%			41.67	61.70	48.1%
4	470.00	585.00	24.5%			83.33	123.30	48.0%
6	970.00	1,207.00	24.4%			133.33	197.30	48.0%
8	1,697.00	2,112.00	24.5%			283.33	419.30	48.0%
10	2,508.00	3,121.00	24.4%					
12								
Consumption Charges:								
1st block	1.1900	1.4814	24.5%			0.3000	0.4440	48.0%
2nd block	1.0455	1.3015	24.5%			0.2450	0.3626	48.0%
3rd block	0.8673	1.0798	24.5%			0.2000	0.2960	48.0%
4th block	0.7938	0.9883	24.5%					
5th block	0.7455	0.9866	32.3%					
6th block	0.5963	0.7892	32.3%					
First	100					100		
Next	233					233		
Next	3000					3000		
Next	30,000					3,333		
Next	66,667							
Over	100,000							

Aqua Pennsylvania, Inc.
Current and Proposed Rates

	Zone 3			Bunker Hill			Phoenixville		
	Current Rates	Proposed Rates		Current Rates	Proposed Rates		Current Rates	Proposed Rates	
Public									
Customer Charges:									
5/8	28.00	32.40	15.7%				3.33	4.90	47.0%
3/4	28.00	32.40	15.7%				3.33	4.90	47.0%
1	52.50	65.30	24.4%				6.67	9.90	48.5%
1-1/2	101.10	125.80	24.4%				11.67	17.30	48.3%
2	143.90	179.10	24.5%				25.00	37.00	48.0%
3	289.00	360.00	24.6%				41.67	61.70	48.1%
4	470.00	585.00	24.5%				83.33	123.30	48.0%
6	970.00	1,207.00	24.4%				133.33	197.30	48.0%
8	1,697.00	2,112.00	24.5%				283.33	419.30	48.0%
10									
5/8,1-1/2									
Consumption Charges:									
1st block	1.1900	1.4814	24.5%				0.3000	0.4440	48.0%
2nd block	1.0455	1.3015	24.5%				0.2450	0.3626	48.0%
3rd block	0.8573	1.0674	24.5%				0.2000	0.2960	48.0%
4th block	0.7847	0.9769	24.5%						
CC Gardens & Sand Springs									
Beech Mountain									
Bristol Township									
Mifflin Township									
Concord Park									
Treasure Lake									
First	100						100		
Next	233						233		
Next	3,000						3,000		
Over	3,333						3,333		
Sales to Other Water Utilities									
Customer Charges:									
5/8	28.00	32.40	15.7%						
3/4	28.00	32.40	15.7%						
1	52.50	65.30	24.4%						
1-1/2	101.10	125.80	24.4%						
2	143.90	179.10	24.5%						
3	289.00	360.00	24.6%						
4	470.00	585.00	24.5%						
6	970.00	1,207.00	24.4%						
8	1,697.00	2,112.00	24.5%						
10	2,508.00	3,121.00	24.4%						
12									
Consumption Charges:									
All Usage	1.1900	1.4814	24.5%				0.0000	0.0000	#DIV/0!
UNMETERED									
Zone 1, 2 and 3	65.52	65.52	0.0%						
Sun Valley									
Volumetric Rate									
Belle Aire									

Docket No. R-2021-3027386
Aqua Pennsylvania Wastewater, Inc.
Current and Proposed Rates

		RZ-1 - Meter Size			RZ-1 - EDU		
		Media Division			Bridlewood and Eagle Rock Divisions		
		Current Rates	Proposed Rates	Change	Current Rates	Proposed Rates	Change
Residential							
EDU Charge		$ 31.00	$ 39.10		$ 31.00	$ 39.10	
Non-Residential							
		Meter Size Charges			**Per EDU**		
5/8	1	31.00	39.10	26.1%	31.00	39.10	26.1%
3/4	1.5	46.50	58.65	26.1%	31.00	39.10	26.1%
1	2.5	77.50	97.75	26.1%	31.00	39.10	26.1%
1-1/2	5	155.00	195.50	26.1%	31.00	39.10	26.1%
2	8	248.00	312.80	26.1%	31.00	39.10	26.1%
3	15	465.00	586.50	26.1%	31.00	39.10	26.1%
4	25	775.00	977.50	26.1%	31.00	39.10	26.1%
6	50	1,550.00	1,955.00	26.1%	31.00	39.10	26.1%
8	80	2,480.00	3,128.00	26.1%	31.00	39.10	26.1%
10	115	3,565.00	4,496.50	26.1%	31.00	39.10	26.1%
Flat Rate Customer Charges							
		61.40	77.49	26.2%	61.40	77.49	26.2%
Consumption Charges:							
1st block		0.7600	0.9598	26.3%	0.7600	0.9598	26.3%
2nd block							
3rd block							
Block Size (100 gallons)							
	First						
	Over						
SPECIAL CHARGES							
Customer Charges:		**Media Division**			**Bridlewood Apartment Complex**		
		31.00	39.10	26.1%	13,323.80	16,815.76	26.2%
						217 EDU's	
					Children's World Daycare		
					429.80	542.44	26.2%
						7 EDU's	
Consumption Charges:		**SPECIAL CHARGES**					
All Usage		0.7600	0.9598	26.3%			

Docket No. R-2021-3027386
Aqua Pennsylvania Wastewater, Inc.
Current and Proposed Rates

	RZ-1A			RZ-1B		
	Treasure Lake, Village at Valley Forge and Bunker Hill Divisions			Penn Township Division		
	Current Rates	Proposed Rates	Change	Current Rates	Proposed Rates	Change
Residential						
EDU Charge	$ 31.00	$ 39.10		31.00	39.10	26.1%
Non-Residential						
	Meter Size Charges			**Per EDU**		
5/8	31.00	39.10	26.1%	67.50	39.10	-42.1%
3/4	31.00	39.10	26.1%	67.50	39.10	-42.1%
1	31.00	39.10	26.1%	67.50	39.10	-42.1%
1-1/2	62.00	78.20	26.1%	67.50	39.10	-42.1%
2	99.20	125.12	26.1%	67.50	39.10	-42.1%
3	186.00	234.60	26.1%	67.50	39.10	-42.1%
4	310.00	391.00	26.1%	67.50	39.10	-42.1%
6	500.00	630.65	26.1%	67.50	39.10	-42.1%
8		-		67.50	39.10	-42.1%
10		-		67.50	39.10	-42.1%
Flat Rate Customer Charges						
	56.20	77.49	37.9%	80.00	77.49	-3.1%
				Allowance Residential Only		
Consumption Charges:				-	0.9598	
1st block	0.6300	0.9598	52.3%	1.0000	0.9598	-4.0%
2nd block						
3rd block						
Block Size (100 gallons)						
First				10	10	0.0%
Over						
SPECIAL CHARGES						
Customer Charges:						
Consumption Charges:						
All Usage						

Docket No. R-2021-3027386
Aqua Pennsylvania Wastewater, Inc.
Current and Proposed Rates

	RZ-2			RZ-2			RZ-3		
	Emlenton, Rivercrest, and White Haven (Kidder) Divisions			Pinecrest Division			Beech Mountan Lakes, Deerfield Knoll, Laurel Lakes, Links at Gettysburg, Stoney Creek, Thornhurst, and Willistown Woods Divisions		
	Current Rates	Proposed Rates	Change	Current Rates	Proposed Rates	Change	Current Rates	Proposed Rates	Change
Residential									
EDU Charge	$ 36.00	$ 39.10	8.6%			N/A	$ 46.00	$ 58.09	26.3%
Non-Residential									
	Meter Size Charges			**Meter Size Charges**			**Meter Size Charges**		
5/8	36.00	39.10	8.6%	-		N/A	46.00	58.09	26.3%
3/4	54.00	58.65	8.6%	-		N/A	69.00	87.14	26.3%
1	90.00	97.75	8.6%	-		N/A	115.00	145.23	26.3%
1-1/2	180.00	195.50	8.6%	-		N/A	230.00	290.46	26.3%
2	288.00	312.80	8.6%	-		N/A	368.00	464.73	26.3%
3	540.00	586.50	8.6%	-		N/A	690.00	871.37	26.3%
4	900.00	977.50	8.6%	-		N/A	1,150.00	1,452.29	26.3%
6	1,800.00	1,955.00	8.6%	-		N/A	2,300.00	2,904.58	26.3%
8	2,880.00	3,128.00	8.6%	-		N/A	3,680.00	4,647.32	26.3%
10	4,140.00	4,496.50	8.6%	-		N/A	5,290.00	6,680.53	26.3%
Flat Rate Customer Charges									
	68.40	77.49	13.3%			#DIV/0!	80.00	101.03	26.3%
Consumption Charges:									
1st block	0.8100	0.9598	18.5%	3.0000	3.0000	0.0%	0.8500	1.0734	26.3%
2nd block									
3rd block									
Block Size (100 gallons)									
First									
Over									
SPECIAL CHARGES									
Customer Charges:	**Emlenton Division (First 20 EDU)**						**Flat Rate - Various Divisions**		
	68.40	77.49	13.3%				71.50	101.03	41.3%
	Additional Charge - After 20 EDU						**Woodloch Springs**		
	34.20	38.75	13.3%	Need to Ask Erin.			282.21	356.40	26.3%
	Bridgeview Apartments								
	1,915.20	2,169.78	13.3%						
Consumption Charges:							**SPECIAL CHARGES**		
							Woodloch Springs - Clubhouse/Pool		
All Usage							0.1200	0.1515	26.3%

Docket No. R-2021-3027386
Aqua Pennsylvania Wastewater, Inc.
Current and Proposed Rates

	RZ-4			RZ-5			SEASONAL RZ-6		
	Honeycroft Village, Lake Harmony, New Daleville, Peddlers View, Tobyhanna Township, Twin Hills Divisions			Avon Grove School, East Bradford, Little Washington, Greens at Penn Oaks, Sage Hill and Plumsock* Divisions			Masthope Division		
	Current Rates	Proposed Rates	Change	Current Rates	Proposed Rates	Change	Current Rates	Proposed Rates	Change
Residential									
EDU Charge	$ 62.00	$ 77.50	25.0%	$ 74.00	$ 93.45	26.3%	$ 39.64	$ 50.10	26.4%
Non-Residential									
	Meter Size Charges			**Meter Size Charges**			**Per EDU**		
5/8	62.00	77.50	25.0%	74.00	93.45	26.3%	39.64	50.10	26.4%
3/4	93.00	116.30	25.1%	111.00	140.20	26.3%	39.64	50.10	26.4%
1	155.00	193.80	25.0%	185.00	233.60	26.3%	39.64	50.10	26.4%
1-1/2	310.00	387.50	25.0%	370.00	467.30	26.3%	39.64	50.10	26.4%
2	496.00	620.00	25.0%	592.00	747.60	26.3%	39.64	50.10	26.4%
3	930.00	1,162.50	25.0%	1,110.00	1,401.80	26.3%	39.64	50.10	26.4%
4	1,550.00	1,937.50	25.0%	1,850.00	2,336.30	26.3%	39.64	50.10	26.4%
6	3,100.00	3,875.00	25.0%	3,700.00	4,672.50	26.3%	39.64	50.10	26.4%
8	4,960.00	6,200.00	25.0%	5,920.00	7,476.00	26.3%	39.64	50.10	26.4%
10	7,130.00	8,912.50	25.0%	8,510.00	10,746.80	26.3%	39.64	50.10	26.4%
Flat Rate Customer Charges									
	100.00	125.00	25.0%	112.40	141.94	26.3%	43.64	55.15	26.4%
Consumption Charges:									
1st block	0.9500	1.1875	25.0%	0.9600	1.2123	26.3%	0.1000	0.1263	26.3%
2nd block									
3rd block									
Block Size (100 gallons)									
First									
Over									

SPECIAL CHARGES
Customer Charges:

Newlin Geen Division		
110.00	93.45	-15.0%
Sage Hill Division - Unmetered		
180.00	141.94	-21.1%
Avon Grove School - Flat Rate		
$ 8,281.25	$ 10,503.71	26.8%

Consumption Charges:	**SPECIAL CHARGES**		
	Newlin Geen Division		
All Usage	0.7500	1.2123	61.6%
	East Brandywine Twp		
	0.7740	1.2123	56.6%

Docket No. R-2021-3027386
Aqua Pennsylvania Wastewater, Inc.
Current and Proposed Rates

	RZ-7			RZ-8			RZ-9			RZ-10		
	Limerick Division			East Bradford Division			Cheltenham Township Division			East Norriton, Whitpain Division		
	Current Rates	Proposed Rates	Change	Current Rates	Proposed Rates	Change	Current Rates	Proposed Rates	Change	Current Rates	Proposed Rates	Change
Residential												
EDU Charge	$ 28.10	$ 39.48	40.5%	$ 26.00	$ 39.10	50.4%	$ 20.89	$ 28.21			$ 32.37	
Non-Residential												
	Per EDU			**Per EDU**			**Per EDU**			**Per EDU**		
5/8	28.10	39.48	40.5%	26.00	39.10	50.4%	20.89	28.21	35.0%	21.08	32.37	53.6%
3/4	28.10	39.48	40.5%	26.00	39.10	50.4%	20.89	28.21	35.0%	21.08	32.37	
1	28.10	39.48	40.5%	26.00	39.10	50.4%	20.89	28.21	35.0%	21.08	32.37	
1-1/2	28.10	39.48	40.5%	26.00	39.10	50.4%	20.89	28.21	35.0%	21.08	32.37	
2	28.10	39.48	40.5%	26.00	39.10	50.4%	20.89	28.21	35.0%	21.08	32.37	
3	28.10	39.48	40.5%	26.00	39.10	50.4%	20.89	28.21	35.0%	21.08	32.37	
4	28.10	39.48	40.5%	26.00	39.10	50.4%	20.89	28.21	35.0%	21.08	32.37	
6	28.10	39.48	40.5%	26.00	39.10	50.4%	20.89	28.21	35.0%	21.08	32.37	
8	28.10	39.48	40.5%	26.00	39.10	50.4%	20.89	28.21	35.0%	21.08	32.37	
10	28.10	39.48	40.5%	26.00	39.10	50.4%	20.89	28.21	35.0%	21.08	32.37	
Flat Rate Customer Charges												
	28.33	72.94	157.5%	68.09	83.42	22.5%		49.34		38.53	58.53	51.9%
				52.72	83.42	58.2%						
	Monthly											
	Allowance - 2,493 gallons (KG)			**Allowance**						**Allowance**		
Consumption Charges:	-	0.8366		-	1.1080					-	0.6540	
1st block	0.6460	0.8366	29.5%	0.6900	1.1080	60.6%	0.3910	0.5283	35.1%	0.6540	0.6540	0.0%
2nd block												
3rd block												
Block Size (100 gallons)												
First				20	20	0.0%				13.33	13.33	0.0%
Over												
				Birmingham								
				68.09	68.09							
SPECIAL CHARGES										**SPECIAL CHARGES - WHITPAIN**		
Customer Charges:				**NonResidential (First 10 EDU)**						**Residential - Under 6,666 Gals.**		
				68.40	83.42	22.0%				31.66		
				Additional Charge - After 10 EDU						**Residential - Over 6,666 Gals.**		
				34.20	83.42	143.9%				39.57		
										NonResidential - Up to 4,000 Gals.		
										56.00		
										NonResidential - Over 4,000 Gals.		
Consumption Charges:										**Allowance**		
										-	0.6540	#DIV/0!
All Usage										0.8000	0.6540	-18.3%

Docket No. R-2021-3027386
Aqua Pennsylvania Wastewater, Inc.
Current and Proposed Rates

	RZ-11				CONTRACTS & 3rd Party		
	New Garden Division						
		Current Rates	Proposed Rates	Change		Current Rates	Proposed Rates	
Residential								
EDU Charge		$ 37.64	$ 51.71	37.4%				
Non-Residential								
		Per EDU - Commercial 1 & Public			**Woodloch Pines**			
5/8		52.71	72.42	37.4%		25,551.80	27,107.90	6.1%
3/4		**Per EDU - Commercial 2**				26,318.35	27,921.14	6.1%
1		64.31	88.36	37.4%	**Whitehaven - Dennison Twp**			
1-1/2						87.00	138.15	58.8%
2		**Per EDU - Comm & Residential**			**Whitehaven - East Side Borough**			
3		218.32	299.97	37.4%		115.00	138.15	20.1%
4		180.69	248.27	37.4%		28.00	28.00	0.0%
6		165.62	227.56	37.4%	**Whitehaven - Penn Lake Borough**			
8		143.05	196.55	37.4%		29.00	46.05	58.8%
10		127.98	175.84	37.4%	**East Brandywine**			
		90.34	124.13	37.4%		351.00	351.00	0.0%
Flat Rate Customer Charges					**Upper Providence**			
		Per EDU - Industrial				135,289.00	154,773.04	14.4%
		195.67	268.85	37.4%		137,165.00	154,773.04	12.8%
					Elwyn			
						24,555.00	28,091.93	14.4%
						24,896.00	28,091.93	12.8%
		Allowance -5,000 - Residential & Public			**Foster Township**			
Consumption Charges:		-	$ -			87.00	138.15	58.8%
1st block		1.5170	2.0844	37.4%				
2nd block		1.9650	2.6999	37.4%				
3rd block								
					Consumption Charges:			
Block Size (100 gallons)					**Southdown Homes**			
	First	**Allowance -5,000 - Commercial 1**				0.7490	0.7490	0.0%
	Over	-	-					
		2.3500	3.2289					
		3.0150	4.1426					
SPECIAL CHARGES		**Allowance -5,000 - Commercial 2**						
Customer Charges:		-	-					
		3.3020	4.5369					
		4.1670	5.7255					
		Allowance -5,000 - Comm & Res Combined						
		-	-					
		2.3500	3.2289					
		3.0150	4.1426					
		Allowance -5,000 - Industrial						
		-	-					
		4.3070	5.9178					
		5.7900	7.9555					
Consumption Charges:								
All Usage				37.4%				
				37.4%				
				37.4%				
				37.4%				
				37.4%				
				37.4%				
				37.4%				
				37.4%				

APPENDIX F

Docket Nos. R-2021-3027385, R-2021-3027386

AQUA PENNSYLVANIA, INC.

WATER AND WASTEWATER REVENUE REQUIREMENT - SUMMARY

		Total Company	Water Operations	Wastewater Base Operations	Wastewater Limerick	Wastewater East Bradford	Wastewater Cheltenham	Wastewater East Norriton	Wastewater New Garden
Present Rate Revenue		$ 547,083,180	$ 510,006,687	$ 19,011,761	$ 3,978,573	$ 1,014,569	$ 7,258,740	$ 2,923,770	$ 2,889,080
Additional Revenue Requirement		96,990,325	64,670,404	16,899,204	5,937,121	815,294	3,037,963	2,898,212	2,732,128
Act 11 Allocation	(1)	-	20,818,925	(13,438,958)	(2,974,708)	(457,466)	(514,835)	(1,746,595)	(1,686,363)
Proposed Revenues		$ 644,073,506	$ 595,496,015	$ 22,472,007	$ 6,940,986	$ 1,372,397	$ 9,781,867	$ 4,075,387	$ 3,934,846
Rate Increase/(Decrease) - $		$ 96,990,325	$ 85,489,328	$ 3,460,246	$ 2,962,413	$ 357,828	$ 2,523,127	$ 1,151,617	$ 1,045,766
Rate Increase/(Decrease) - %		17.73%	16.76%	18.20%	74.46%	35.27%	34.76%	39.39%	36.20%

Notes:

(1) The allocation between wastewater operations and water operations is achieved by the proposed consolidation of water and wastewater revenue requirements to derive the water and wastewater rates proposed by the Company in this case.

Docket Nos. R-2021-3027385, R-2021-3027386

AQUA PENNSYLVANIA, INC.

WATER AND WASTEWATER REVENUE REQUIREMENT - SUMMARY

		Total Company	Water Operations	Wastewater Base Operations	Wastewater Limerick	Wastewater East Bradford	Wastewater Cheltenham	Wastewater East Norriton	Wastewater New Garden
Present Rate Revenue		$ 547,083,180	$ 510,006,687	$ 19,011,761	$ 3,978,573	$ 1,014,569	$ 7,258,740	$ 2,923,770	$ 2,889,080
Additional Revenue Requirement		96,990,325	64,670,404	16,899,204	5,937,121	815,294	3,037,963	2,898,212	2,732,128
Act 11 Allocation	(1)	-	20,818,925	(13,438,958)	(2,974,708)	(457,466)	(514,835)	(1,746,595)	(1,686,363)
Proposed Revenues		$ 644,073,506	$ 595,496,015	$ 22,472,007	$ 6,940,986	$ 1,372,397	$ 9,781,867	$ 4,075,387	$ 3,934,846
Rate Increase/(Decrease) - $		$ 96,990,325	$ 85,489,328	$ 3,460,246	$ 2,962,413	$ 357,828	$ 2,523,127	$ 1,151,617	$ 1,045,766
Rate Increase/(Decrease) - %		17.73%	16.76%	18.20%	74.46%	35.27%	34.76%	39.39%	36.20%

Notes:

(1) The allocation between wastewater operations and water operations is achieved by the proposed consolidation of water and wastewater revenue requirements to derive the water and wastewater rates proposed by the Company in this case.

TABLE I
Aqua Pennsylvania, Inc.
INCOME SUMMARY
R-2021-3027385, R-2021-3027386

	Pro Forma Present Rates (1)	Company Adjustments (1) (2)	Pro Forma Present Rates (Revised) (1) (2)	ALJ Adjustments	ALJ Pro Forma Present Rates	ALJ Revenue Increase (3)	Total Allowable Revenues
	$	$	$	$	$	$	$
Operating Revenue	$ 510,006,687	$ -	$ 510,006,687	$ -	$ 510,006,687	$ 64,670,391	$ 574,677,078
Expenses:							
O & M Expense	116,459,234	-	116,459,234	-	116,459,234	331,269	116,790,503
Depreciation	122,166,578	-	122,166,578	-	122,166,578	-	122,166,578
Taxes, Other	12,450,066	-	12,450,066	-	12,450,066	434,301	12,884,367
Income Taxes:							
State	5,345,514	11,184	5,356,698	-	5,356,698	6,384,092	11,740,790
Federal	7,677,005	21,161	7,698,166	-	7,698,166	12,079,353	19,777,519
Total Expenses	264,098,397	32,345	264,130,742	-	264,130,742	19,229,015	283,359,757
Net Inc. Available for Return	$ 245,908,290	$ (32,345)	$ 245,875,945	$ -	$ 245,875,945	$ 45,441,376	$ 291,317,321
Rate Base	3,818,456,012	(6,077,218)	3,812,378,794	-	3,812,378,794		3,812,378,794
Rate of Return	6.44%		6.45%				7.64135300%

(1) Company Main Brief

TABLE I(A)
Aqua Pennsylvania, Inc.
RATE OF RETURN
R-2021-3027385, R-2021-3027386

	Structure	Cost	After-Tax Weighted Cost	Effective Tax Rate Complement	Pre-Tax Weighted Cost Rate
Total Cost of Debt			1.84216100%		
Long-term Debt	46.05%	4.00%	1.84216100%		1.84%
Short-term Debt	0.00%	0.00%	0.00000000%		
Preferred Stock	0.00%	0.00%	0.00000000%	0.711079	0.00%
Common Equity	53.95%	10.75%	5.79919200%	0.711079	8.16%
	100.00%		7.64135300%		10.00%

Pre-Tax Interest Coverage	5.43
After-Tax Interest Coverage	4.15

TABLE I(B)
Aqua Pennsylvania, Inc.
REVENUE FACTOR
R-2021-3027385, R-2021-3027386

100%	1.00000000
Less:	
Uncollectible Accounts Factor (*)	0.00512242
PUC, OCA, OSBA, DPC Assessment Factors (*)	0.00671560
Gross Receipts Tax	0.00000000
Other Tax Factors	0.00000000
	0.98816198
State Income Tax Rate (*)	0.09990000
Effective State Income Tax Rate	0.09871738
Factor After Local and State Taxes	0.88944460
Federal Income Tax Rate (*)	0.21000000
Effective Federal Income Tax Rate	0.18678337
Revenue Factor (100% - Effective Tax Rates)	0.70266123

(*) Company Main Brief

TABLE II
Aqua Pennsylvania, Inc.
SUMMARY OF ADJUSTMENTS
R-2021-3027385, R-2021-3027386

Adjustments	Rate Base	Revenues	Expenses	Depreciation	Taxes-Other	State Income Tax	Federal Income Tax
	$	$	$	$	$	$	$
RATE BASE:							
CWC:							
Int. & Div. (Table IV)	(IV!B38)						
Taxes (Table V)	(V!P42)						
O & M (Table VI)	(VI!B42)						
REVENUES:							
		0				0	0
EXPENSES:							
			0			0	0
			0			0	0
			0			0	0
			0			0	0
			0			0	0
			0			0	0
			0			0	0
			0			0	0
			0			0	0
			0			0	0
			0			0	0
			0			0	0
TAXES:							
Interest Synchronization (Table III)						0	0
TOTALS	0	0	0	0	0	0	0

TABLE III
Aqua Pennsylvania, Inc.
INTEREST SYNCHRONIZATION
R-2021-3027385, R-2021-3027386

	Amount $
Company Rate Base Claim	3,812,378,794
ALJ Rate Base Adjustments	0
ALJ Rate Base	3,812,378,794
Weighted Cost of Debt	1.84216100%
ALJ Interest Expense	70,230,155
Company Claim (1)	70,342,109
Total ALJ Adjustment	111,954
Company Adjustment (1) (2)	111,954
Net ALJ Interest Adjustment	(0)
State Income Tax Rate	9.99%
State Income Tax Adjustment	0
Net ALJ Interest Adjustment	(0)
State Income Tax Adjustment	0
Net ALJ Adjustment for F.I.T.	(0)
Federal Income Tax Rate	21.00%
Federal Income Tax Adjustment	0

(1) Company Main Brief
(2) Rate Base Company Adjustment times weighted cost of de

TABLE IV
Aqua Pennsylvania, Inc.
CASH WORKING CAPITAL - Interest and Dividends
R-2021-3027385, R-2021-3027386

Accrued Interest	Long-Term Debt	Short-Term Debt	Preferred Stock Dividends	
Company Rate Base Claim	$3,812,378,794	$3,812,378,794	Company Rate Base Claim	$3,812,378,794
ALJ Rate Base Adjustments	$0	$0	ALJ Rate Base Adjustments	$0
ALJ Rate Base	$3,812,378,794	$3,812,378,794	ALJ Rate Base	$3,812,378,794
Weighted Cost of Debt	1.84216100%	0.00%	Weighted Cost Pref. Stock	0.00000000%
ALJ Annual Interest Exp.	$70,230,155	$0	ALJ Preferred Dividends	$0
Average Revenue Lag Days	45.1	45.1	Average Revenue Lag Days	45.1
Average Expense Lag Days	90.3	90.3	Average Expense Lag Days	90.3
Net Lag Days	-45.2	-45.2	Net Lag Days	-45.2
Working Capital Adjustment				
ALJ Daily Interest Exp.	$192,411	$0	ALJ Daily Dividends	$0
Net Lag Days	-45.2	-45.2	Net Lag Days	-45.2
ALJ Working Capital	($8,696,977)	$0		$0
Company Claim (1) (2)	($8,697,000)	$0	Company Claim (1) (2)	$0
ALJ Adjustment	$23	$0		$0
Total Interest & Dividend Adj.	$23			

(1) Company Main Brief.
(2) Company claim rounded to nearest thousandth

TABLE V
Aqua Pennsylvania, Inc.
CASH WORKING CAPITAL -TAXES
R-2021-3027385, R-2021-3027386

Description	Company Proforma Tax Expense Present Rates	ALJ Adjustments	ALJ Pro forma Tax Expense Present Rates	ALJ Allowance	ALJ Adjusted Taxes at Present Rates	Daily Expense	Net Lead/ Lag Days	Accrued Tax Adjustment
Assessments	$3,425,001	$0	$3,425,001	$434,301	$3,859,302	$10,573.43	-197.50	($2,088,252)
Public Utility Realty	$4,800,000	$0	$4,800,000		$4,800,000	$13,150.68	-11.30	($148,603)
Capital Stock Tax	$0	$0	$0		$0	$0.00	0.00	$0
Local property taxes & misc.	$1,073,227	$0	$1,073,227		$1,073,227	$2,940.35	-167.00	($491,038)
FICA Taxes - Hourly	$2,470,719	$0	$2,470,719		$2,470,719	$6,769.09	8.50	$57,537
FICA Taxes - Executive & Exempt	$1,729,006	$0	$1,729,006		$1,729,006	$4,737.00	12.00	$56,844
Federal Unemployment Tax	$26,883	$0	$26,883		$26,883	$73.65	75.00	$5,524
PA Unemployment Tax	$276,017	$0	$276,017		$276,017	$756.21	75.00	$56,716
	$0	$0	$0		$0	$0.00	0.00	$0
	$0	$0	$0		$0	$0.00	0.00	$0
	$0	$0	$0		$0	$0.00	0.00	$0
State Income Tax	$5,783,096	$0	$5,783,096	$6,384,092	$12,167,188	$33,334.76	45.20	$1,506,731
Federal Income Tax	$13,101,742	$0	$13,101,742	$12,079,353	$25,181,095	$68,989.30	33.40	$2,304,243
	$32,685,691	$0	$32,685,691	$18,897,746	$51,583,437	$141,324.47	8.91	$1,259,702

Average Lag Days in Receipt of Revenues	45.1
Average Lag in Payment of Taxes	8.9
Net Lag	36.2
Average Daily Tax Expense	141,324
ALJ Cash Working Capital for Taxes	5,114,533

(1) Company Main Brief

TABLE VI
Aqua Pennsylvania, Inc.
CASH WORKING CAPITAL -- O & M EXPENSE
R-2021-3027385, R-2021-3027386

Description	Company Pro forma F.T.Y. Expense	ALJ	ALJ Pro forma Expenses	Lag Days	Lag Dollars
Hourly Labor	$21,691,942	$0	$21,691,942	7.50	$162,689,568
Non-Union Labor	$14,922,316	$0	$14,922,316	11.00	$164,145,477
Management Fee	$18,159,655	$0	$18,159,655	16.00	$290,554,473
Electric Power	$8,264,721	$0	$8,264,721	20.73	$171,297,822
Water Purchased	$4,148,773	$0	$4,148,773	32.55	$135,036,763
Employee Group Insurance	$5,966,463	$0	$5,966,463	16.00	$95,463,405
Liability Insurance	$7,021,825	$0	$7,021,825	-1.37	($9,618,665)
SFI Postage	$1,344,879	$0	$1,344,879	-7.96	($10,706,644)
Pension	$3,990,000	$0	$3,990,000	300.60	$1,199,377,034
SFAS106	$27,361	$0	$27,361	365.67	$10,005,097
All Other Expenses	$27,451,796	$0	$27,451,796	25.50	$700,020,787
	$0	$0	$0	0.00	$0
	$0	$0	$0	0.00	$0
	$0	$0	$0	0.00	$0
	$0	$0	$0	0.00	$0
	$0	$0	$0	0.00	$0
	$112,989,731	$0	$112,989,731	25.70	$2,908,265,117

ALJ Average Revenue Lag	45.1	
Less: ALJ Avg. Expense Lag	25.7	
Net Difference	19.4	Days
ALJ Pro forma O & M Expense per Day	$309,561	
ALJ CWC for O & M	$6,005,483	
Less: Company Claim (1) (2)	$6,005,000	
ALJ Adjustment	$483	

(1) Company Main Brief
(2) Company claim rounded to nearest thousandth

TABLE I
Aqua Pennsylvania Wastewater, Inc. - Base
INCOME SUMMARY
R-2021-3027385, R-2021-3027386

	Pro Forma Present Rates (1)	Company Adjustments (1)	Pro Forma Present Rates (Revised) (1)	ALJ Adjustments	ALJ Pro Forma Present Rates	ALJ Revenue Increase (2)	Total Allowable Revenues
	$	$	$	$	$	$	$
Operating Revenue	$ 19,011,761	$ -	19,011,761	$ -	$ 19,011,761	$ 16,899,204	$ 35,910,965
Expenses:							
O & M Expense	9,830,816	-	9,830,816	-	9,830,816	201,761	10,032,577
Depreciation	7,780,016	-	7,780,016	-	7,780,016	-	7,780,016
Taxes, Other	303,529	-	303,529	-	303,529	113,488	417,017
Income Taxes:							
State	(1,181,921)	-	(1,181,921)	-	(1,181,921)	1,656,737	474,816
Federal	(1,086,251)	-	(1,086,251)	-	(1,086,251)	3,134,716	2,048,465
Total Expenses	15,646,188	-	15,646,188	-	15,646,188	5,106,702	20,752,890
Net Inc. Available for Return	$ 3,365,573	$ -	$ 3,365,573	$ -	$ 3,365,573	$ 11,792,501	$ 15,158,075
Rate Base	198,368,990	-	198,368,990	-	198,368,990		198,368,990
Rate of Return	1.70%		1.70%				7.64135300%

(1) Company Main Brief

TABLE I(A)
Aqua Pennsylvania Wastewater, Inc. - Base
RATE OF RETURN
R-2021-3027385, R-2021-3027386

	Structure	Cost	After-Tax Weighted Cost	Effective Tax Rate Complement	Pre-Tax Weighted Cost Rate
Total Cost of Debt			1.84216100%		
Long-term Debt	46.05%	4.00%	1.84216100%		1.84%
Short-term Debt	0.00%	0.00%	0.00000000%		
Preferred Stock	0.00%	0.00%	0.00000000%	0.711079	0.00%
Common Equity	53.95%	10.75%	5.79919200%	0.711079	8.16%
	100.00%		7.64135300%		10.00%

Pre-Tax Interest Coverage	5.43
After-Tax Interest Coverage	4.15

TABLE I(B)
Aqua Pennsylvania Wastewater, Inc. - Base
REVENUE FACTOR
R-2021-3027385, R-2021-3027386

100%	1.00000000
Less:	
Uncollectible Accounts Factor (*)	0.01193911
PUC, OCA, OSBA, DPC Assessment Factors (*)	0.00671560
Gross Receipts Tax	0.00000000
Other Tax Factors	0.00000000
	0.98134529
State Income Tax Rate (*)	0.09990000
Effective State Income Tax Rate	0.09803639
Factor After Local and State Taxes	0.88330890
Federal Income Tax Rate (*)	0.21000000
Effective Federal Income Tax Rate	0.18549487
Revenue Factor (100% - Effective Tax Rates)	0.69781403

(*) Company Main Brief

TABLE II
Aqua Pennsylvania Wastewater, Inc. - Base
SUMMARY OF ADJUSTMENTS
R-2021-3027385, R-2021-3027386

Adjustments	Rate Base	Revenues	Expenses	Depreciation	Taxes-Other	State Income Tax	Federal Income Tax
	$	$	$	$	$	$	$
RATE BASE:							
CWC:							
Int. & Div. (Table IV)	(IV!B38)						
Taxes (Table V)	(V!P42)						
O & M (Table VI)	(VI!B42)						
REVENUES:							
		0				0	0
EXPENSES:							
			0			0	0
			0			0	0
			0			0	0
			0			0	0
			0			0	0
			0			0	0
			0			0	0
			0			0	0
			0			0	0
			0			0	0
			0			0	0
			0			0	0
TAXES:							
Interest Synchronization (Table III)						0	0
TOTALS	0	0	0	0	0	0	0

TABLE III
Aqua Pennsylvania Wastewater, Inc. - Base
INTEREST SYNCHRONIZATION
R-2021-3027385, R-2021-3027386

	Amount $
Company Rate Base Claim	198,368,990
ALJ Rate Base Adjustments	0
ALJ Rate Base	198,368,990
Weighted Cost of Debt	1.84216100%
ALJ Interest Expense	3,654,276
Company Claim (1)	3,654,276
Total ALJ Adjustment	0
Company Adjustment	0
Net ALJ Interest Adjustment	0
State Income Tax Rate	9.99%
State Income Tax Adjustment	0
Net ALJ Interest Adjustment	0
State Income Tax Adjustment	0
Net ALJ Adjustment for F.I.T.	0
Federal Income Tax Rate	21.00%
Federal Income Tax Adjustment	0

(1) Company Main Brief

TABLE IV
Aqua Pennsylvania Wastewater, Inc. - Base
CASH WORKING CAPITAL - Interest and Dividends
R-2021-3027385, R-2021-3027386

Accrued Interest	Long-Term Debt	Short-Term Debt	Preferred Stock Dividends	
Company Rate Base Claim	$198,368,990	$198,368,990	Company Rate Base Claim	$198,368,990
ALJ Rate Base Adjustments	$0	$0	ALJ Rate Base Adjustments	$0
ALJ Rate Base	$198,368,990	$198,368,990	ALJ Rate Base	$198,368,990
Weighted Cost of Debt	1.84216100%	0.00%	Weighted Cost Pref. Stock	0.00000000%
ALJ Annual Interest Exp.	$3,654,276	$0	ALJ Preferred Dividends	$0
Average Revenue Lag Days	50.2	50.2	Average Revenue Lag Days	50.2
Average Expense Lag Days	91.3	91.3	Average Expense Lag Days	91.3
Net Lag Days	-41.1	-41.1	Net Lag Days	-41.1
Working Capital Adjustment				
ALJ Daily Interest Exp.	$10,012	$0	ALJ Daily Dividends	$0
Net Lag Days	-41.1	-41.1	Net Lag Days	-41.1
ALJ Working Capital	($411,493)	$0		$0
Company Claim (1)	($411,000)	$0	Company Claim (1)	$0
ALJ Adjustment	($493)	$0		$0
Total Interest & Dividend Adj.	($493)			

(1) Company Main Brief.

TABLE V
Aqua Pennsylvania Wastewater, Inc. - Base
CASH WORKING CAPITAL -TAXES
R-2021-3027385, R-2021-3027386

Description	Company Proforma Tax Expense Present Rates	ALJ Adjustments	ALJ Pro forma Tax Expense Present Rates	ALJ Allowance	ALJ Adjusted Taxes at Present Rates	Daily Expense	Net Lead/ Lag Days	Accrued Tax Adjustment
Assessments	$127,675	$0	$127,675	$113,488	$241,163	$661	-197.50	($130,492)
Local, County, School, & Municipal Ta	$175,853	$0	$175,853		$175,853	$482	-167.00	($80,459)
	$0	$0	$0		$0	$0	0.00	$0
	$0	$0	$0		$0	$0	0.00	$0
	$0	$0	$0		$0	$0	0.00	$0
	$0	$0	$0		$0	$0	0.00	$0
	$0	$0	$0		$0	$0	0.00	$0
	$0	$0	$0		$0	$0	0.00	$0
	$0	$0	$0		$0	$0	0.00	$0
	$0	$0	$0		$0	$0	0.00	$0
	$0	$0	$0		$0	$0	0.00	$0
State Income Tax	($1,178,637)	$0	($1,178,637)	$1,656,737	$478,100	$1,310	45.20	$59,206
Federal Income Tax	($2,225,857)	$0	($2,225,857)	$3,134,716	$908,859	$2,490	33.40	$83,167
	($3,100,965)	$0	($3,100,965)	$4,904,941	$1,803,976	$4,942	-13.88	($68,578)

Average Lag Days in Receipt of Revenues	50.2
Average Lag in Payment of Taxes	(13.9)
Net Lag	64.1
Average Daily Tax Expense	4,942
ALJ Cash Working Capital for Taxes	316,709

(1) Company Main Brief

TABLE VI
Aqua Pennsylvania Wastewater, Inc. - Base
CASH WORKING CAPITAL -- O & M EXPENSE
R-2021-3027385, R-2021-3027386

Description	Company Pro forma F.T.Y. Expense	ALJ	ALJ Pro forma Expenses	Lag Days	Lag Dollars
Hourly Labor	$1,098,103	$0	$1,098,103	7.50	$8,235,769
Non-Union Labor	$995,114	$0	$995,114	11.00	$10,946,249
Management Fee	$714,262	$0	$714,262	16.00	$11,428,185
Electric Power	$888,526	$0	$888,526	20.73	$18,415,943
Employee Group Insurance	$1,255,930	$0	$1,255,930	16.00	$20,094,875
Liability Insurance	$23,324	$0	$23,324	-1.37	($31,950)
SFI Postage	$51,111	$0	$51,111	-7.96	($406,901)
All Other Expenses	$5,707,866	$0	$5,707,866	25.50	$145,550,579
	$0	$0	$0	0.00	$0
	$0	$0	$0	0.00	$0
	$0	$0	$0	0.00	$0
	$0	$0	$0	0.00	$0
	$0	$0	$0	0.00	$0
	$0	$0	$0	0.00	$0
	$0	$0	$0	0.00	$0
	$0	$0	$0	0.00	$0
	$10,734,236	$0	$10,734,236	20.00	$214,232,749

ALJ Average Revenue Lag	50.2	
Less: ALJ Avg. Expense Lag	20.0	
Net Difference	30.2	Days
ALJ Pro forma O & M Expense per Day	$29,409	
ALJ CWC for O & M	$888,152	
Less: Company Claim (1)	$888,000	
ALJ Adjustment	$152	

(1) Company Main Brief

TABLE I
Aqua Pennsylvania Wastewater, Inc. - Limerick
INCOME SUMMARY
R-2021-3027385, R-2021-3027386

	Pro Forma Present Rates (1)	Company Adjustments (1)	Pro Forma Present Rates (Revised) (1)	ALJ Adjustments	ALJ Pro Forma Present Rates	ALJ Revenue Increase (2)	Total Allowable Revenues
	$	$	$	$	$	$	$
Operating Revenue	$ 3,978,573	$ -	$ 3,978,573	$ -	$ 3,978,573	$ 5,937,121	$ 9,915,694
Expenses:							
O & M Expense	2,041,053	-	2,041,053	-	2,041,053	70,884	2,111,937
Depreciation	1,998,881	-	1,998,881	-	1,998,881	-	1,998,881
Taxes, Other	26,719	-	26,719	-	26,719	39,871	66,590
Income Taxes:							
State	(146,426)	-	(146,426)	-	(146,426)	582,054	435,628
Federal	(211,135)	-	(211,135)	-	(211,135)	1,101,306	890,171
Total Expenses	3,709,091	-	3,709,091	-	3,709,091	1,794,115	5,503,206
Net Inc. Available for Return	$ 269,482	$ -	$ 269,482	$ -	$ 269,482	$ 4,143,006	$ 4,412,489
Rate Base	57,744,861	-	57,744,861	-	57,744,861		57,744,861
Rate of Return	0.47%		0.47%				7.64135300%

(1) Company Main Brief

TABLE I(A)
Aqua Pennsylvania Wastewater, Inc. - Limerick
RATE OF RETURN
R-2021-3027385, R-2021-3027386

	Structure	Cost	After-Tax Weighted Cost	Effective Tax Rate Complement	Pre-Tax Weighted Cost Rate
Total Cost of Debt			1.84216100%		
Long-term Debt	46.05%	4.00%	1.84216100%		1.84%
Short-term Debt	0.00%	0.00%	0.00000000%		
Preferred Stock	0.00%	0.00%	0.00000000%	0.711079	0.00%
Common Equity	53.95%	10.75%	5.79919200%	0.711079	8.16%
	100.00%		7.64135300% (1)		10.00%

Pre-Tax Interest Coverage	5.43
After-Tax Interest Coverage	4.15

TABLE I(B)
Aqua Pennsylvania Wastewater, Inc. - Limerick
REVENUE FACTOR
R-2021-3027385, R-2021-3027386

100%	1.00000000
Less:	
Uncollectible Accounts Factor (*)	0.01193911
PUC, OCA, OSBA, DPC Assessment Factors (*)	0.00671560
Gross Receipts Tax	0.00000000
Other Tax Factors	0.00000000
	0.98134529
State Income Tax Rate (*)	0.09990000
Effective State Income Tax Rate	0.09803639
Factor After Local and State Taxes	0.88330890
Federal Income Tax Rate (*)	0.21000000
Effective Federal Income Tax Rate	0.18549487
Revenue Factor (100% - Effective Tax Rates)	0.69781403

(*) Company Main Brief

TABLE II
Aqua Pennsylvania Wastewater, Inc. - Limerick
SUMMARY OF ADJUSTMENTS
R-2021-3027385, R-2021-3027386

Adjustments	Rate Base	Revenues	Expenses	Depreciation	Taxes-Other	State Income Tax	Federal Income Tax
	$	$	$	$	$	$	$
RATE BASE:							
CWC:							
Int. & Div. (Table IV)	(IV!B38)						
Taxes (Table V)	(V!P42)						
O & M (Table VI)	(VI!B42)						
REVENUES:							
		0				0	0
EXPENSES:							
			0			0	0
			0			0	0
			0			0	0
			0			0	0
			0			0	0
			0			0	0
			0			0	0
			0			0	0
			0			0	0
			0			0	0
			0			0	0
			0			0	0
TAXES:							
Interest Synchronization (Table III)						0	0
TOTALS	0	0	0	0	0	0	0

TABLE III
Aqua Pennsylvania Wastewater, Inc. - Limerick
INTEREST SYNCHRONIZATION
R-2021-3027385, R-2021-3027386

	Amount $
Company Rate Base Claim	57,744,861
ALJ Rate Base Adjustments	0
ALJ Rate Base	57,744,861
Weighted Cost of Debt	1.84216100%
ALJ Interest Expense	1,063,753
Company Claim (1)	1,063,753
Total ALJ Adjustment	0
Company Adjustment	0
Net ALJ Interest Adjustment	0
State Income Tax Rate	9.99%
State Income Tax Adjustment	0
Net ALJ Interest Adjustment	0
State Income Tax Adjustment	0
Net ALJ Adjustment for F.I.T.	0
Federal Income Tax Rate	21.00%
Federal Income Tax Adjustment	0

(1) Company Main Brief

TABLE IV
Aqua Pennsylvania Wastewater, Inc. - Limerick
CASH WORKING CAPITAL - Interest and Dividends
R-2021-3027385, R-2021-3027386

Accrued Interest	Long-Term Debt	Short-Term Debt	Preferred Stock Dividends	
Company Rate Base Claim	$57,744,861	$57,744,861	Company Rate Base Claim	$57,744,861
ALJ Rate Base Adjustments	$0	$0	ALJ Rate Base Adjustments	$0
ALJ Rate Base	$57,744,861	$57,744,861	ALJ Rate Base	$57,744,861
Weighted Cost of Debt	1.84216100%	0.00%	Weighted Cost Pref. Stock	0.00000000%
ALJ Annual Interest Exp.	$1,063,753	$0	ALJ Preferred Dividends	$0
Average Revenue Lag Days	49.7	49.7	Average Revenue Lag Days	49.7
Average Expense Lag Days	91.3	91.3	Average Expense Lag Days	91.3
Net Lag Days	-41.6	-41.6	Net Lag Days	-41.6
Working Capital Adjustment				
ALJ Daily Interest Exp.	$2,914	$0	ALJ Daily Dividends	$0
Net Lag Days	-41.6	-41.6	Net Lag Days	-41.6
ALJ Working Capital	($121,222)	$0		$0
Company Claim (1)	($121,000)	$0	Company Claim (1)	$0
ALJ Adjustment	($222)	$0		$0
Total Interest & Dividend Adj.	($222)			

(1) Company Main Brief.

TABLE V
Aqua Pennsylvania Wastewater, Inc. - Limerick
CASH WORKING CAPITAL -TAXES
R-2021-3027385, R-2021-3027386

Description	Company Proforma Tax Expense Present Rates	ALJ Adjustments	ALJ Pro forma Tax Expense Present Rates	ALJ Allowance	ALJ Adjusted Taxes at Present Rates	Daily Expense	Net Lead/ Lag Days	Accrued Tax Adjustment
Assessments	$26,719	$0	$26,719	$39,871	$66,590	$182	-197.5	($36,032)
	$0	$0	$0		$0	$0	0.0	$0
	$0	$0	$0		$0	$0	0.0	$0
	$0	$0	$0		$0	$0	0.0	$0
	$0	$0	$0		$0	$0	0.0	$0
	$0	$0	$0		$0	$0	0.0	$0
	$0	$0	$0		$0	$0	0.0	$0
	$0	$0	$0		$0	$0	0.0	$0
	$0	$0	$0		$0	$0	0.0	$0
	$0	$0	$0		$0	$0	0.0	$0
State Income Tax	($146,426)	$0	($146,426)	$582,054	$435,628	$1,194	45.2	$53,946
Federal Income Tax	($277,054)	$0	($277,054)	$1,101,306	$824,252	$2,258	33.4	$75,425
	($396,762)	$0	($396,762)	$1,723,231	$1,326,469	$3,634	25.7	$93,339

Average Lag Days in Receipt of Revenues	49.7
Average Lag in Payment of Taxes	25.7
Net Lag	24.0
Average Daily Tax Expense	3,634
ALJ Cash Working Capital for Taxes	87,293

(1) Company Main Brief

TABLE VI
Aqua Pennsylvania Wastewater, Inc. - Limerick
CASH WORKING CAPITAL -- O & M EXPENSE
R-2021-3027385, R-2021-3027386

Description	Company Pro forma F.T.Y. Expense	ALJ	ALJ Pro forma Expenses	Lag Days	Lag Dollars
Hourly Labor	$322,628	$0	$322,628	7.50	$2,419,712
Non-Union Labor	$147,980	$0	$147,980	11.00	$1,627,776
Management Fee	$245,560	$0	$245,560	16.00	$3,928,958
Electric Power	$249,039	$0	$249,039	20.73	$5,161,671
Employee Group Insurance	$282,365	$0	$282,365	16.00	$4,517,836
Liability Insurance	$8,019	$0	$8,019	-1.37	($10,984)
SFI Postage	$17,572	$0	$17,572	-7.96	($139,891)
All Other Expenses	$711,728	$0	$711,728	25.50	$18,149,058
	$0	$0	$0	0.00	$0
	$0	$0	$0	0.00	$0
	$0	$0	$0	0.00	$0
	$0	$0	$0	0.00	$0
	$0	$0	$0	0.00	$0
	$0	$0	$0	0.00	$0
	$0	$0	$0	0.00	$0
	$0	$0	$0	0.00	$0
	$1,984,890	$0	$1,984,890	18.00	$35,654,136

ALJ Average Revenue Lag	49.7	
Less: ALJ Avg. Expense Lag	18.0	
Net Difference	31.7	Days
ALJ Pro forma O & M Expense per Day	$5,438	
ALJ CWC for O & M	$172,385	
Less: Company Claim (1)	$172,000	
ALJ Adjustment	$385	

(1) Company Main Brief

TABLE I
Aqua Pennsylvania Wastewater, Inc. - East Bradford
INCOME SUMMARY
R-2021-3027385, R-2021-3027386

	Pro Forma Present Rates (1)	Company Adjustments (1)	Pro Forma Present Rates (Revised) (1)	ALJ Adjustments	ALJ Pro Forma Present Rates	ALJ Revenue Increase (2)	Total Allowable Revenues
	$	$	$	$	$	$	$
Operating Revenue	$ 1,014,569	$ -	$ 1,014,569	$ -	$ 1,014,569	$ 815,294	$ 1,829,863
Expenses:							
O & M Expense	1,113,197	-	1,113,197	-	1,113,197	9,734	1,122,931
Depreciation	158,552	-	158,552	-	158,552	-	158,552
Taxes, Other	11,413	-	11,413	-	11,413	5,475	16,888
Income Taxes:							
State	(42,221)	-	(42,221)	-	(42,221)	79,928	37,707
Federal	(68,340)	-	(68,340)	-	(68,340)	151,233	82,893
Total Expenses	1,172,601	-	1,172,601	-	1,172,601	246,370	1,418,971
Net Inc. Available for Return	$ (158,032)	$ -	$ (158,032)	$ -	$ (158,032)	$ 568,923	$ 410,891
Rate Base	5,377,205	-	5,377,205	-	5,377,205		5,377,205
Rate of Return	-2.94%		-2.94%				7.64135300%

(1) Company Main Brief

TABLE I(A)
Aqua Pennsylvania Wastewater, Inc. - East Bradford
RATE OF RETURN
R-2021-3027385, R-2021-3027386

	Structure	Cost	After-Tax Weighted Cost	Effective Tax Rate Complement	Pre-Tax Weighted Cost Rate
Total Cost of Debt			1.84216100%		
Long-term Debt	46.05%	4.00%	1.84216100%		1.84%
Short-term Debt	0.00%	0.00%	0.00000000%		
Preferred Stock	0.00%	0.00%	0.00000000%	0.711079	0.00%
Common Equity	53.95%	10.75%	5.79919200%	0.711079	8.16%
	100.00%		7.64135300%		10.00%

Pre-Tax Interest Coverage	5.43
After-Tax Interest Coverage	4.15

TABLE I(B)
Aqua Pennsylvania Wastewater, Inc. - East Bradford
REVENUE FACTOR
R-2021-3027385, R-2021-3027386

100%	1.00000000
Less:	
Uncollectible Accounts Factor (*)	0.01193911
PUC, OCA, OSBA, DPC Assessment Factors (*)	0.00671560
Gross Receipts Tax	0.00000000
Other Tax Factors	0.00000000
	0.98134529
State Income Tax Rate (*)	0.09990000
Effective State Income Tax Rate	0.09803639
Factor After Local and State Taxes	0.88330890
Federal Income Tax Rate (*)	0.21000000
Effective Federal Income Tax Rate	0.18549487
Revenue Factor (100% - Effective Tax Rates)	0.69781403

(*) Company Main Brief

TABLE II
Aqua Pennsylvania Wastewater, Inc. - East Bradford
SUMMARY OF ADJUSTMENTS
R-2021-3027385, R-2021-3027386

Adjustments	Rate Base	Revenues	Expenses	Depreciation	Taxes-Other	State Income Tax	Federal Income Tax
	$	$	$	$	$	$	$
RATE BASE:							
CWC:							
Int. & Div. (Table IV)	(IV!B38)						
Taxes (Table V)	(V!P42)						
O & M (Table VI)	(VI!B42)						
REVENUES:							
		0				0	0
EXPENSES:							
			0			0	0
			0			0	0
			0			0	0
			0			0	0
			0			0	0
			0			0	0
			0			0	0
			0			0	0
			0			0	0
			0			0	0
			0			0	0
			0			0	0
TAXES:							
Interest Synchronization (Table III)						0	0
TOTALS	0	0	0	0	0	0	0

TABLE III
Aqua Pennsylvania Wastewater, Inc. - East Bradford
INTEREST SYNCHRONIZATION
R-2021-3027385, R-2021-3027386

	Amount $
Company Rate Base Claim	5,377,205
ALJ Rate Base Adjustments	0
ALJ Rate Base	5,377,205
Weighted Cost of Debt	1.84216100%
ALJ Interest Expense	99,057
Company Claim (1)	99,057
Total ALJ Adjustment	0
Company Adjustment	0
Net ALJ Interest Adjustment	0
State Income Tax Rate	9.99%
State Income Tax Adjustment	0
Net ALJ Interest Adjustment	0
State Income Tax Adjustment	0
Net ALJ Adjustment for F.I.T.	0
Federal Income Tax Rate	21.00%
Federal Income Tax Adjustment	0

(1) Company Main Brief

TABLE IV
Aqua Pennsylvania Wastewater, Inc. - East Bradford
CASH WORKING CAPITAL - Interest and Dividends
R-2021-3027385, R-2021-3027386

Accrued Interest	Long-Term Debt	Short-Term Debt	Preferred Stock Dividends	
Company Rate Base Claim	$5,377,205	$5,377,205	Company Rate Base Claim	$5,377,205
ALJ Rate Base Adjustments	$0	$0	ALJ Rate Base Adjustments	$0
ALJ Rate Base	$5,377,205	$5,377,205	ALJ Rate Base	$5,377,205
Weighted Cost of Debt	1.84216100%	0.00%	Weighted Cost Pref. Stock	0.00000000%
ALJ Annual Interest Exp.	$99,057	$0	ALJ Preferred Dividends	$0
Average Revenue Lag Days	48.1	48.1	Average Revenue Lag Days	48.1
Average Expense Lag Days	91.3	91.3	Average Expense Lag Days	91.3
Net Lag Days	-43.2	-43.2	Net Lag Days	-43.2
Working Capital Adjustment				
ALJ Daily Interest Exp.	$271	$0	ALJ Daily Dividends	$0
Net Lag Days	-43.2	-43.2	Net Lag Days	-43.2
ALJ Working Capital	($11,707)	$0		$0
Company Claim (1)	($12,000)	$0	Company Claim (1)	$0
ALJ Adjustment	$293	$0		$0
Total Interest & Dividend Adj.	$293			

(1) Company Main Brief.

TABLE V
Aqua Pennsylvania Wastewater, Inc. - East Bradford
CASH WORKING CAPITAL -TAXES
R-2021-3027385, R-2021-3027386

Description	Company Proforma Tax Expense Present Rates	ALJ Adjustments	ALJ Pro forma Tax Expense Present Rates	ALJ Allowance	ALJ Adjusted Taxes at Present Rates	Daily Expense	Net Lead/ Lag Days	Accrued Tax Adjustment
PA PUC - General Assessments	$6,813	$0	$6,813	$5,475	$12,288	$34	-197.50	($6,650)
Local, County, School, & Municipal Tax	$4,600	$0	$4,600		$4,600	$13	-167.00	($2,104)
	$0	$0	$0		$0	$0	0.00	$0
	$0	$0	$0		$0	$0	0.00	$0
	$0	$0	$0		$0	$0	0.00	$0
	$0	$0	$0		$0	$0	0.00	$0
	$0	$0	$0		$0	$0	0.00	$0
	$0	$0	$0		$0	$0	0.00	$0
	$0	$0	$0		$0	$0	0.00	$0
	$0	$0	$0		$0	$0	0.00	$0
	$0	$0	$0		$0	$0	0.00	$0
State Income Tax	($42,221)	$0	($42,221)	$79,928	$37,707	$103	45.20	$4,670
Federal Income Tax	($79,886)	$0	($79,886)	$151,233	$71,347	$195	33.40	$6,529
	($110,694)	$0	($110,694)	$236,636	$125,942	$345	7.09	$2,445

Average Lag Days in Receipt of Revenues	48
Average Lag in Payment of Taxes	7.1
Net Lag	41
Average Daily Tax Expense	345
ALJ Cash Working Capital for Taxes	14,151

(1) Company Main Brief

TABLE VI
Aqua Pennsylvania Wastewater, Inc. - East Bradford
CASH WORKING CAPITAL -- O & M EXPENSE
R-2021-3027385, R-2021-3027386

Description	Company Pro forma F.T.Y. Expense	ALJ	ALJ Pro forma Expenses	Lag Days	Lag Dollars
Non-Union Labor	$161	$0	$161	11.00	$1,775
Management Fee	$53,881	$0	$53,881	16.00	$862,099
Electric Power	$12,168	$0	$12,168	20.73	$252,196
Employee Group Insurance	$97	$0	$97	16.00	$1,549
Liability Insurance	$1,760	$0	$1,760	-1.37	($2,410)
SFI Postage	$3,856	$0	$3,856	-7.96	($30,698)
All Other Expenses	$1,027,433	$0	$1,027,433	25.50	$26,199,540
	$0	$0	$0	0.00	$0
	$0	$0	$0	0.00	$0
	$0	$0	$0	0.00	$0
	$0	$0	$0	0.00	$0
	$0	$0	$0	0.00	$0
	$0	$0	$0	0.00	$0
	$0	$0	$0	0.00	$0
	$0	$0	$0	0.00	$0
	$0	$0	$0	0.00	$0
	$1,099,356	$0	$1,099,356	24.80	$27,284,051

ALJ Average Revenue Lag	48.1	
Less: ALJ Avg. Expense Lag	24.8	
Net Difference	23.3	Days
ALJ Pro forma O & M Expense per Day	$3,012	
ALJ CWC for O & M	$70,180	
Less: Company Claim (1)	$70,000	
ALJ Adjustment	$180	

(1) Company Main Brief

TABLE I
Aqua Pennsylvania Wastewater, Inc. - Cheltenham
INCOME SUMMARY
R-2021-3027385, R-2021-3027386

	Pro Forma Present Rates (1)	Company Adjustments (1)	Pro Forma Present Rates (Revised) (1)	ALJ Adjustments	ALJ Pro Forma Present Rates	ALJ Revenue Increase (2)	Total Allowable Revenues
	$	$	$	$	$	$	$
Operating Revenue	$ 7,258,740	$ -	$ 7,258,740	$ -	$ 7,258,740	$ 3,037,962	$ 10,296,702
Expenses:							
O & M Expense	4,552,450	-	4,552,450	-	4,552,450	36,271	4,588,721
Depreciation	1,011,770	-	1,011,770	-	1,011,770	-	1,011,770
Taxes, Other	48,747	-	48,747	-	48,747	20,402	69,149
Income Taxes:							
State	(10,260)	-	(10,260)	-	(10,260)	297,831	287,571
Federal	164,955	-	164,955	-	164,955	563,526	728,481
Total Expenses	5,767,661	-	5,767,661	-	5,767,661	918,030	6,685,691
Net Inc. Available for Return	$ 1,491,079	$ -	$ 1,491,079	$ -	$ 1,491,079	$ 2,119,933	$ 3,611,011
Rate Base	47,256,177	-	47,256,177	-	47,256,177		47,256,177
Rate of Return	3.16%		3.16%				7.64135300%

(1) Company Main Brief

TABLE I(A)
Aqua Pennsylvania Wastewater, Inc. - Cheltenham
RATE OF RETURN
R-2021-3027385, R-2021-3027386

	Structure	Cost	After-Tax Weighted Cost	Effective Tax Rate Complement	Pre-Tax Weighted Cost Rate
Total Cost of Debt			1.84216100%		
Long-term Debt	46.05%	4.00%	1.84216100%		1.84%
Short-term Debt	0.00%	0.00%	0.00000000%		
Preferred Stock	0.00%	0.00%	0.00000000%	0.711079	0.00%
Common Equity	53.95%	10.75%	5.79919200%	0.711079	8.16%
	100.00%		7.64135300%		10.00%

Pre-Tax Interest Coverage	5.43
After-Tax Interest Coverage	4.15

TABLE I(B)
Aqua Pennsylvania Wastewater, Inc. - Cheltenham
REVENUE FACTOR
R-2021-3027385, R-2021-3027386

100%	1.00000000
Less:	
Uncollectible Accounts Factor (*)	0.01193911
PUC, OCA, OSBA, DPC Assessment Factors (*)	0.00671560
Gross Receipts Tax	0.00000000
Other Tax Factors	0.00000000
	0.98134529
State Income Tax Rate (*)	0.09990000
Effective State Income Tax Rate	0.09803639
Factor After Local and State Taxes	0.88330890
Federal Income Tax Rate (*)	0.21000000
Effective Federal Income Tax Rate	0.18549487
Revenue Factor (100% - Effective Tax Rates)	0.69781403

(*) Company Main Brief

TABLE II
Aqua Pennsylvania Wastewater, Inc. - Cheltenham
SUMMARY OF ADJUSTMENTS
R-2021-3027385, R-2021-3027386

Adjustments	Rate Base	Revenues	Expenses	Depreciation	Taxes-Other	State Income Tax	Federal Income Tax
	$	$	$	$	$	$	$
RATE BASE:							
CWC:							
Int. & Div. (Table IV)	(IV!B38)						
Taxes (Table V)	(V!P42)						
O & M (Table VI)	(VI!B42)						
REVENUES:							
		0				0	0
EXPENSES:							
			0			0	0
			0			0	0
			0			0	0
			0			0	0
			0			0	0
			0			0	0
			0			0	0
			0			0	0
			0			0	0
			0			0	0
			0			0	0
			0			0	0
TAXES:							
Interest Synchronization (Table III)						0	0
TOTALS	0	0	0	0	0	0	0

TABLE III
Aqua Pennsylvania Wastewater, Inc. - Cheltenham
INTEREST SYNCHRONIZATION
R-2021-3027385, R-2021-3027386

	Amount $
Company Rate Base Claim	47,256,177
ALJ Rate Base Adjustments	0
ALJ Rate Base	47,256,177
Weighted Cost of Debt	1.84216100%
ALJ Interest Expense	870,535
Company Claim (1)	870,535
Total ALJ Adjustment	0
Company Adjustment	0
Net ALJ Interest Adjustment	0
State Income Tax Rate	9.99%
State Income Tax Adjustment	0
Net ALJ Interest Adjustment	0
State Income Tax Adjustment	0
Net ALJ Adjustment for F.I.T.	0
Federal Income Tax Rate	21.00%
Federal Income Tax Adjustment	0

(1) Company Main Brief

TABLE IV
Aqua Pennsylvania Wastewater, Inc. - Cheltenham
CASH WORKING CAPITAL - Interest and Dividends
R-2021-3027385, R-2021-3027386

Accrued Interest	Long-Term Debt	Short-Term Debt	Preferred Stock Dividends	
Company Rate Base Claim	$47,256,177	$47,256,177	Company Rate Base Claim	$47,256,177
ALJ Rate Base Adjustments	$0	$0	ALJ Rate Base Adjustments	$0
ALJ Rate Base	$47,256,177	$47,256,177	ALJ Rate Base	$47,256,177
Weighted Cost of Debt	1.84216100%	0.00%	Weighted Cost Pref. Stock	0.00000000%
ALJ Annual Interest Exp.	$870,535	$0	ALJ Preferred Dividends	$0
Average Revenue Lag Days	57.2	57.2	Average Revenue Lag Days	57.2
Average Expense Lag Days	91.3	91.3	Average Expense Lag Days	91.3
Net Lag Days	-34.1	-34.1	Net Lag Days	-34.1
Working Capital Adjustment				
ALJ Daily Interest Exp.	$2,385	$0	ALJ Daily Dividends	$0
Net Lag Days	-34.1	-34.1	Net Lag Days	-34.1
ALJ Working Capital	($81,329)	$0		$0
Company Claim (1)	($81,000)	$0	Company Claim (1)	$0
ALJ Adjustment	($329)	$0		$0
Total Interest & Dividend Adj.	($329)			

(1) Company Main Brief.

TABLE V
Aqua Pennsylvania Wastewater, Inc. - Cheltenham
CASH WORKING CAPITAL -TAXES
R-2021-3027385, R-2021-3027386

Description	Company Proforma Tax Expense Present Rates	ALJ Adjustments	ALJ Pro forma Tax Expense Present Rates	ALJ Allowance	ALJ Adjusted Taxes at Present Rates	Daily Expense	Net Lead/ Lag Days	Accrued Tax Adjustment
Assessments	$48,747	$0	$48,747	$20,402	$69,149	189	-197.50	($37,416)
	$0	$0	$0		$0	-	0.00	$0
	$0	$0	$0		$0	-	0.00	$0
	$0	$0	$0		$0	-	0.00	$0
	$0	$0	$0		$0	-	0.00	$0
	$0	$0	$0		$0	-	0.00	$0
	$0	$0	$0		$0	-	0.00	$0
	$0	$0	$0		$0	-	0.00	$0
	$0	$0	$0		$0	-	0.00	$0
	$0	$0	$0		$0	-	0.00	$0
	$0	$0	$0		$0	-	0.00	$0
State Income Tax	($10,260)	$0	($10,260)	$297,831	$287,571	788	45.20	$35,612
Federal Income Tax	($19,413)	$0	($19,413)	$563,526	$544,113	1,491	33.40	$49,790
	$19,073	$0	$19,073	$881,759	$900,832	2,468	19.00	$47,986

Average Lag Days in Receipt of Revenues	57.2
Average Lag in Payment of Taxes	19.0
Net Lag	38.2
Average Daily Tax Expense	2,468
ALJ Cash Working Capital for Taxes	94,279

(1) Company Main Brief

TABLE VI
Aqua Pennsylvania Wastewater, Inc. - Cheltenham
CASH WORKING CAPITAL -- O & M EXPENSE
R-2021-3027385, R-2021-3027386

Description	Company Pro forma F.T.Y. Expense	ALJ	ALJ Pro forma Expenses	Lag Days	Lag Dollars
Hourly Labor	$55,850	$0	$55,850	7.50	$418,878
Non-Union Labor	$309,953	$0	$309,953	11.00	$3,409,478
Management Fee	$429,319	$0	$429,319	16.00	$6,869,098
Employee Group Insurance	$219,482	$0	$219,482	16.00	$3,511,709
Liability Insurance	$14,020	$0	$14,020	-1.37	($19,204)
SFI Postage	$30,721		$30,721	-7.96	($244,571)
All Other Expenses	$3,391,357	$0	$3,391,357	25.50	$86,479,591
	$0	$0	$0	0.00	$0
	$0	$0	$0	0.00	$0
	$0	$0	$0	0.00	$0
	$0	$0	$0	0.00	$0
	$0	$0	$0	0.00	$0
	$0	$0	$0	0.00	$0
	$0	$0	$0	0.00	$0
	$0	$0	$0	0.00	$0
	$0	$0	$0	0.00	$0
	$4,450,701	$0	$4,450,701	22.60	$100,424,979

ALJ Average Revenue Lag	57.2	
Less: ALJ Avg. Expense Lag	22.6	
Net Difference	34.6	Days
ALJ Pro forma O & M Expense per Day	$12,194	
ALJ CWC for O & M	$421,912	
Less: Company Claim (1)	$422,000	
ALJ Adjustment	($88)	

(1) Company Main Brief

TABLE I
Aqua Pennsylvania Wastewater, Inc. - East Norriton
INCOME SUMMARY
R-2021-3027385, R-2021-3027386

	Pro Forma Present Rates (1)	Company Adjustments (1)	Pro Forma Present Rates (Revised) (1)	ALJ Adjustments	ALJ Pro Forma Present Rates	ALJ Revenue Increase (2)	Total Allowable Revenues
	$	$	$	$	$	$	$
Operating Revenue	$ 2,923,770	$ -	$ 2,923,770	$ -	$ 2,923,770	$ 2,898,212	$ 5,821,982
Expenses:							
O & M Expense	2,271,778	-	2,271,778	-	2,271,778	34,602	2,306,380
Depreciation	952,641	-	952,641	-	952,641	-	952,641
Taxes, Other	19,635	-	19,635	-	19,635	19,463	39,098
Income Taxes:							
State	(84,197)	-	(84,197)	-	(84,197)	284,130	199,933
Federal	(147,480)	-	(147,480)	-	(147,480)	537,604	390,124
Total Expenses	3,012,378	-	3,012,378	-	3,012,378	875,799	3,888,177
Net Inc. Available for Return	$ (88,608)	$ -	$ (88,608)	$ -	$ (88,608)	$ 2,022,413	$ 1,933,805
Rate Base	25,307,104	-	25,307,104	-	25,307,104		25,307,104
Rate of Return	-0.35%		-0.35%				7.64135300%

(1) Company Main Brief

TABLE I(A)
Aqua Pennsylvania Wastewater, Inc. - East Norriton
RATE OF RETURN
R-2021-3027385, R-2021-3027386

	Structure	Cost	After-Tax Weighted Cost	Effective Tax Rate Complement	Pre-Tax Weighted Cost Rate
Total Cost of Debt			1.84216100%		
Long-term Debt	46.05%	4.00%	1.84216100%		1.84%
Short-term Debt	0.00%	0.00%	0.00000000%		
Preferred Stock	0.00%	0.00%	0.00000000%	0.711079	0.00%
Common Equity	53.95%	10.75%	5.79919200%	0.711079	8.16%
	100.00%		7.64135300%		10.00%

Pre-Tax Interest Coverage	5.43
After-Tax Interest Coverage	4.15

TABLE I(B)
Aqua Pennsylvania Wastewater, Inc. - East Norriton
REVENUE FACTOR
R-2021-3027385, R-2021-3027386

100%	1.00000000
Less:	
Uncollectible Accounts Factor (*)	0.01193911
PUC, OCA, OSBA, DPC Assessment Factors (*)	0.00671560
Gross Receipts Tax	0.00000000
Other Tax Factors	0.00000000
	0.98134529
State Income Tax Rate (*)	0.09990000
Effective State Income Tax Rate	0.09803639
Factor After Local and State Taxes	0.88330890
Federal Income Tax Rate (*)	0.21000000
Effective Federal Income Tax Rate	0.18549487
Revenue Factor (100% - Effective Tax Rates)	0.69781403

(*) Company Main Brief

TABLE II
Aqua Pennsylvania Wastewater, Inc. - East Norriton
SUMMARY OF ADJUSTMENTS
R-2021-3027385, R-2021-3027386

Adjustments	Rate Base	Revenues	Expenses	Depreciation	Taxes-Other	State Income Tax	Federal Income Tax
	$	$	$	$	$	$	$
RATE BASE:							
CWC:							
Int. & Div. (Table IV)	(IV!B38)						
Taxes (Table V)	(V!P42)						
O & M (Table VI)	(VI!B42)						
REVENUES:							
		0				0	0
EXPENSES:							
			0			0	0
			0			0	0
			0			0	0
			0			0	0
			0			0	0
			0			0	0
			0			0	0
			0			0	0
			0			0	0
			0			0	0
			0			0	0
			0			0	0
TAXES:							
Interest Synchronization (Table III)						0	0
TOTALS	0	0	0	0	0	0	0

TABLE III
Aqua Pennsylvania Wastewater, Inc. - East Norriton
INTEREST SYNCHRONIZATION
R-2021-3027385, R-2021-3027386

	Amount $
Company Rate Base Claim	25,307,104
ALJ Rate Base Adjustments	0
ALJ Rate Base	25,307,104
Weighted Cost of Debt	1.84216100%
ALJ Interest Expense	466,198
Company Claim (1)	466,198
Total ALJ Adjustment	0
Company Adjustment	0
Net ALJ Interest Adjustment	0
State Income Tax Rate	9.99%
State Income Tax Adjustment	0
Net ALJ Interest Adjustment	0
State Income Tax Adjustment	0
Net ALJ Adjustment for F.I.T.	0
Federal Income Tax Rate	21.00%
Federal Income Tax Adjustment	0

(1) Company Main Brief

TABLE IV
Aqua Pennsylvania Wastewater, Inc. - East Norriton
CASH WORKING CAPITAL - Interest and Dividends
R-2021-3027385, R-2021-3027386

Accrued Interest	Long-Term Debt	Short-Term Debt	Preferred Stock Dividends	
Company Rate Base Claim	$25,307,104	$25,307,104	Company Rate Base Claim	$25,307,104
ALJ Rate Base Adjustments	$0	$0	ALJ Rate Base Adjustments	$0
ALJ Rate Base	$25,307,104	$25,307,104	ALJ Rate Base	$25,307,104
Weighted Cost of Debt	1.84216100%	0.00%	Weighted Cost Pref. Stock	0.00000000%
ALJ Annual Interest Exp.	$466,198	$0	ALJ Preferred Dividends	$0
Average Revenue Lag Days	44.1	44.1	Average Revenue Lag Days	44.1
Average Expense Lag Days	91.3	91.3	Average Expense Lag Days	91.3
Net Lag Days	-47.2	-47.2	Net Lag Days	-47.2
Working Capital Adjustment				
ALJ Daily Interest Exp.	$1,277	$0	ALJ Daily Dividends	$0
Net Lag Days	-47.2	-47.2	Net Lag Days	-47.2
ALJ Working Capital	($60,274)	$0		$0
Company Claim (1)	($60,000)	$0	Company Claim (1)	$0
ALJ Adjustment	($274)	$0		$0
Total Interest & Dividend Adj.	($274)			

(1) Company Main Brief.

TABLE V
Aqua Pennsylvania Wastewater, Inc. - East Norriton
CASH WORKING CAPITAL -TAXES
R-2021-3027385, R-2021-3027386

Description	Company Proforma Tax Expense Present Rates	ALJ Adjustments	ALJ Pro forma Tax Expense Present Rates	ALJ Allowance	ALJ Adjusted Taxes at Present Rates	Daily Expense	Net Lead/ Lag Days	Accrued Tax Adjustment
Assessments	$19,635	$0	$19,635	$19,463	$39,098	$107	-197.50	($21,156)
	$0	$0	$0		$0	$0	0.00	$0
	$0	$0	$0		$0	$0	0.00	$0
	$0	$0	$0		$0	$0	0.00	$0
	$0	$0	$0		$0	$0	0.00	$0
	$0	$0	$0		$0	$0	0.00	$0
	$0	$0	$0		$0	$0	0.00	$0
	$0	$0	$0		$0	$0	0.00	$0
	$0	$0	$0		$0	$0	0.00	$0
	$0	$0	$0		$0	$0	0.00	$0
State Income Tax	($84,197)	$0	($84,197)	$284,130	$199,933	$548	45.20	$24,759
Federal Income Tax	($159,309)	$0	($159,309)	$537,604	$378,295	$1,036	33.40	$34,617
	($223,871)	$0	($223,871)	$841,197	$617,326	$1,691	22.60	$38,220

Average Lag Days in Receipt of Revenues	44.1
Average Lag in Payment of Taxes	23.0
Net Lag	21.1
Average Daily Tax Expense	1,691
ALJ Cash Working Capital for Taxes	35,687

(1) Company Main Brief

TABLE VI
Aqua Pennsylvania Wastewater, Inc. - East Norriton
CASH WORKING CAPITAL -- O & M EXPENSE
R-2021-3027385, R-2021-3027386

Description	Company Pro forma F.T.Y. Expense	ALJ	ALJ Pro forma Expenses	Lag Days	Lag Dollars
Non-Union Labor	$137,423	$0	$137,423	11.00	$1,511,649
Management Fee	$215,006	$0	$215,006	16.00	$3,440,089
Electric Power	$122,439	$0	$122,439	20.73	$2,537,718
Employee Group Insurance	$82,454	$0	$82,454	16.00	$1,319,257
Liability Insurance	$7,021	$0	$7,021	-1.37	($9,618)
SFI Postage	$15,385	$0	$15,385	-7.96	($122,481)
All Other Expenses	$1,649,556	$0	$1,649,556	25.50	$42,063,673
	$0	$0	$0	0.00	$0
	$0	$0	$0	0.00	$0
	$0	$0	$0	0.00	$0
	$0	$0	$0	0.00	$0
	$0	$0	$0	0.00	$0
	$0	$0	$0	0.00	$0
	$0	$0	$0	0.00	$0
	$0	$0	$0	0.00	$0
	$0	$0	$0	0.00	$0
	$2,229,283	$0	$2,229,283	22.80	$50,740,287

ALJ Average Revenue Lag	44.1	
Less: ALJ Avg. Expense Lag	22.8	
Net Difference	21.3	Days
ALJ Pro forma O & M Expense per Day	$6,108	
ALJ CWC for O & M	$130,100	
Less: Company Claim (1)	$130,000	
ALJ Adjustment	$100	

(1) Company Main Brief

TABLE I
Aqua Pennsylvania Wastewater, Inc. - New Garden
INCOME SUMMARY
R-2021-3027385, R-2021-3027386

	Pro Forma Present Rates (1)	Company Adjustments (1)	Pro Forma Present Rates (Revised) (1)	ALJ Adjustments	ALJ Pro Forma Present Rates	ALJ Revenue Increase (2)	Total Allowable Revenues
	$	$	$	$	$	$	$
Operating Revenue	$ 2,889,080	$ -	$ 2,889,080	$ -	$ 2,889,080	$ 2,732,128	$ 5,621,208
Expenses:							
O & M Expense	1,845,024	-	1,845,024	-	1,845,024	32,619	1,877,643
Depreciation	735,834	-	735,834	-	735,834	-	735,834
Taxes, Other	19,402	-	19,402	-	19,402	18,348	37,750
Income Taxes:							
State	(75,351)	-	(75,351)	-	(75,351)	267,848	192,497
Federal	(40,533)	-	(40,533)	-	(40,533)	506,796	466,263
Total Expenses	2,484,377	-	2,484,377	-	2,484,377	825,611	3,309,988
Net Inc. Available for Return	$ 404,704	$ -	$ 404,704	$ -	$ 404,704	$ 1,906,517	$ 2,311,221
Rate Base	30,246,226	-	30,246,226	-	30,246,226		30,246,226
Rate of Return	1.34%		1.34%				7.64135300%

(1) Company Main Brief

TABLE I(A)
Aqua Pennsylvania Wastewater, Inc. - New Garden
RATE OF RETURN
R-2021-3027385, R-2021-3027386

	Structure	Cost	After-Tax Weighted Cost	Effective Tax Rate Complement	Pre-Tax Weighted Cost Rate
Total Cost of Debt			1.84216100%		
Long-term Debt	46.05%	4.00%	1.84216100%		1.84%
Short-term Debt	0.00%	0.00%	0.00000000%		
Preferred Stock	0.00%	0.00%	0.00000000%	0.711079	0.00%
Common Equity	53.95%	10.75%	5.79919200%	0.711079	8.16%
	100.00%		7.64135300%		10.00%

Pre-Tax Interest Coverage	5.43
After-Tax Interest Coverage	4.15

TABLE I(B)
Aqua Pennsylvania Wastewater, Inc. - New Garden
REVENUE FACTOR
R-2021-3027385, R-2021-3027386

100%	1.00000000
Less:	
Uncollectible Accounts Factor (*)	0.01193911
PUC, OCA, OSBA, DPC Assessment Factors (*)	0.00671560
Gross Receipts Tax	0.00000000
Other Tax Factors	0.00000000
	0.98134529
State Income Tax Rate (*)	0.09990000
Effective State Income Tax Rate	0.09803639
Factor After Local and State Taxes	0.88330890
Federal Income Tax Rate (*)	0.21000000
Effective Federal Income Tax Rate	0.18549487
Revenue Factor (100% - Effective Tax Rates)	0.69781403

(*) Company Main Brief

TABLE II
Aqua Pennsylvania Wastewater, Inc. - New Garden
SUMMARY OF ADJUSTMENTS
R-2021-3027385, R-2021-3027386

Adjustments	Rate Base	Revenues	Expenses	Depreciation	Taxes-Other	State Income Tax	Federal Income Tax
	$	$	$	$	$	$	$
RATE BASE:							
CWC:							
Int. & Div. (Table IV)	(IV!B38)						
Taxes (Table V)	(V!P42)						
O & M (Table VI)	(VI!B42)						
REVENUES:							
		0				0	0
EXPENSES:							
			0			0	0
			0			0	0
			0			0	0
			0			0	0
			0			0	0
			0			0	0
			0			0	0
			0			0	0
			0			0	0
			0			0	0
			0			0	0
			0			0	0
TAXES:							
Interest Synchronization (Table III)						0	0
TOTALS	0	0	0	0	0	0	0

TABLE III
Aqua Pennsylvania Wastewater, Inc. - New Garden
INTEREST SYNCHRONIZATION
R-2021-3027385, R-2021-3027386

	Amount $
Company Rate Base Claim	30,246,226
ALJ Rate Base Adjustments	0
ALJ Rate Base	30,246,226
Weighted Cost of Debt	1.84216100%
ALJ Interest Expense	557,184
Company Claim (1)	557,184
Total ALJ Adjustment	0
Company Adjustment	0
Net ALJ Interest Adjustment	0
State Income Tax Rate	9.99%
State Income Tax Adjustment	0
Net ALJ Interest Adjustment	0
State Income Tax Adjustment	0
Net ALJ Adjustment for F.I.T.	0
Federal Income Tax Rate	21.00%
Federal Income Tax Adjustment	0

(1) Company Main Brief

TABLE IV
Aqua Pennsylvania Wastewater, Inc. - New Garden
CASH WORKING CAPITAL - Interest and Dividends
R-2021-3027385, R-2021-3027386

Accrued Interest	Long-Term Debt	Short-Term Debt	Preferred Stock Dividends	
Company Rate Base Claim	$30,246,226	$30,246,226	Company Rate Base Claim	$30,246,226
ALJ Rate Base Adjustments	$0	$0	ALJ Rate Base Adjustments	$0
ALJ Rate Base	$30,246,226	$30,246,226	ALJ Rate Base	$30,246,226
Weighted Cost of Debt	1.84216100%	0.00%	Weighted Cost Pref. Stock	0.00000000%
ALJ Annual Interest Exp.	$557,184	$0	ALJ Preferred Dividends	$0
Average Revenue Lag Days	22.9	22.9	Average Revenue Lag Days	22.9
Average Expense Lag Days	91.3	91.3	Average Expense Lag Days	91.3
Net Lag Days	-68.4	-68.4	Net Lag Days	-68.4
Working Capital Adjustment				
ALJ Daily Interest Exp.	$1,527	$0	ALJ Daily Dividends	$0
Net Lag Days	-68.4	-68.4	Net Lag Days	-68.4
ALJ Working Capital	($104,447)	$0		$0
Company Claim (1)	($104,000)	$0	Company Claim (1)	$0
ALJ Adjustment	($447)	$0		$0
Total Interest & Dividend Adj.	($447)			

(1) Company Main Brief.

TABLE V
Aqua Pennsylvania Wastewater, Inc. - New Garden
CASH WORKING CAPITAL -TAXES
R-2021-3027385, R-2021-3027386

Description	Company Proforma Tax Expense Present Rates	ALJ Adjustments	ALJ Pro forma Tax Expense Present Rates	ALJ Allowance	ALJ Adjusted Taxes at Present Rates	Daily Expense	Net Lead/ Lag Days	Accrued Tax Adjustment
Assessments	$19,402	$0	$19,402	$18,348	$37,750	$103	(197.50)	($20,425)
	$0	$0	$0		$0	$0	-	$0
	$0	$0	$0		$0	$0	-	$0
	$0	$0	$0		$0	$0	-	$0
	$0	$0	$0		$0	$0	-	$0
	$0	$0	$0		$0	$0	-	$0
	$0	$0	$0		$0	$0	-	$0
	$0	$0	$0		$0	$0	-	$0
	$0	$0	$0		$0	$0	-	$0
	$0	$0	$0		$0	$0	-	$0
	$0	$0	$0		$0	$0	-	$0
State Income Tax	($75,351)	$0	($75,351)	$267,848	$192,497	$527	45.20	$23,838
Federal Income Tax	($142,571)	$0	($142,571)	$506,796	$364,225	$998	33.40	$33,329
	($198,520)	$0	($198,520)	$792,992	$594,472	$1,629	22.56	$36,742

Average Lag Days in Receipt of Revenues	22.9
Average Lag in Payment of Taxes	22.6
Net Lag	0.3
Average Daily Tax Expense	1,629
ALJ Cash Working Capital for Taxes	554

(1) Company Main Brief

TABLE VI
Aqua Pennsylvania Wastewater, Inc. - New Garden
CASH WORKING CAPITAL -- O & M EXPENSE
R-2021-3027385, R-2021-3027386

Description	Company Pro forma F.T.Y. Expense	ALJ	ALJ Pro forma Expenses	Lag Days	Lag Dollars
Non-Union Labor	$12,085	$0	$12,085	11.00	$132,931
Management Fee	$85,388	$0	$85,388	16.00	$1,366,203
Electric Power	$130,877	$0	$130,877	20.73	$2,712,602
Employee Group Insurance	$7,251	$0	$7,251	16.00	$116,012
Liability Insurance	$2,788	$0	$2,788	-1.37	($3,820)
SFI Postage	$6,110	$0	$6,110	-7.96	($48,642)
All Other Expenses	$1,563,192	$0	$1,563,192	25.50	$39,861,387
	$0	$0	$0	0.00	$0
	$0	$0	$0	0.00	$0
	$0	$0	$0	0.00	$0
	$0	$0	$0	0.00	$0
	$0	$0	$0	0.00	$0
	$0	$0	$0	0.00	$0
	$0	$0	$0	0.00	$0
	$0	$0	$0	0.00	$0
	$0	$0	$0	0.00	$0
	$1,807,690	$0	$1,807,690	24.40	$44,136,673

ALJ Average Revenue Lag	22.9	
Less: ALJ Avg. Expense Lag	24.4	
Net Difference	-1.5	Days
ALJ Pro forma O & M Expense per Day	$4,953	
ALJ CWC for O & M	($7,430)	
Less: Company Claim (1)	($7,000)	
ALJ Adjustment	($430)	

(1) Company Main Brief

APPENDIX G

APPENDIX G
Schedule of Company Exhibits and Testimony

Document	**Date Identified**	**Date Admitted**
Aqua PA Initial Filing Volume 1	August 20, 2021	December 20, 2021
Aqua PA Initial Filing Volume 2 – Exhibits 1-A through 1-G	August 20, 2021	December 20, 2021
Aqua PA Initial Filing Volume 3 – Exhibits 2, 3-A	August 20, 2021	December 20, 2021
Aqua PA Initial Filing Volume 4 – Exhibit 4-A and AP St. 7	August 20, 2021	December 20, 2021
Aqua PA Initial Filing Volume 5 – Exhibits 5-A, 5-B, and 5-C	August 20, 2021	December 20, 2021
Aqua PA Initial Filing Volume 6 – Exhibit 6-A, Part I	August 20, 2021	December 20, 2021
Aqua PA Initial Filing Volume 7 – Exhibit 6-A, Part II	August 20, 2021	December 20, 2021
Aqua PA Initial Filing Volume 8 – Exhibit 6-A, Part III	August 20, 2021	December 20, 2021
Aqua PA Initial Filing Volume 9 – Exhibit 6-B, Parts I, II, III	August 20, 2021	December 20, 2021
Aqua PA Initial Filing Volume 10 – Exhibit 6-C, Parts I, II, III	August 20, 2021	December 20, 2021
Aqua PA Initial Filing Volume 11 – Exhibit 6-D, Parts I, II, III	August 20, 2021	December 20, 2021
Aqua PA Initial Filing Volume 12 – Exhibit 6-E, Parts I, II, III	August 20, 2021	December 20, 2021
Aqua PA Initial Filing Volume 13 – Exhibit 6-F, Parts I, II, III	August 20, 2021	December 20, 2021
Aqua PA Initial Filing Volume 14 – Exhibit 6-G, Parts I, II, III	August 20, 2021	December 20, 2021
Aqua PA Initial Filing Volume 15 • AP St. 1 • AP St. 2, and Attachments 1 and 2 • AP St. 3 • AP St. 4 • AP St. 5 • AP St. 6, and Appendix A • AP St. 8 • AP St. 9 • AP St. 10, Aqua Exhibits RFB-1 and RFB-2	August 20, 2021	December 20, 2021

Aqua PA Initial Filing Volume 16 – Minimum Filing Requirements (A) through (F)	August 20, 2021	December 20, 2021
Aqua PA Initial Filing Volume 17 – Minimum Filing Requirements (G)	August 20, 2021	December 20, 2021
Aqua PA Initial Filing Volume 18 – Minimum Filing Requirements (H) through (K)	August 20, 2021	December 20, 2021
Aqua PA Initial Filing Volume 19 – Documents Marked Confidential	August 20, 2021	December 20, 2021
AP St. 1-R	December 2, 2021	December 20, 2021
AP Exhibit WCP-1-R	December 2, 2021	December 20, 2021
AP St. 2-R	December 2, 2021	December 20, 2021
HIGHLY CONFIDENTIAL AP Exhibit EMF-1-R	December 2, 2021	December 20, 2021
AP Exhibit 1-A(a)	December 2, 2021	December 20, 2021
AP Exhibit 1-B(b)	December 2, 2021	December 20, 2021
AP Exhibit 1-C(c)	December 2, 2021	December 20, 2021
AP Exhibit 1-D(d)	December 2, 2021	December 20, 2021
AP Exhibit 1-E(e)	December 2, 2021	December 20, 2021
AP Exhibit 1-F(f)	December 2, 2021	December 20, 2021
AP Exhibit 1-G(g)	December 2, 2021	December 20, 2021
AP St. 3-R	December 2, 2021	December 20, 2021
AP St. 4-R	December 2, 2021	December 20, 2021
AP St. 5-R	December 2, 2021	December 20, 2021
AP Exhibit 5R-A	December 2, 2021	December 20, 2021
AP Exhibit 5R-B	December 2, 2021	December 20, 2021
AP Exhibit 5R-C	December 2, 2021	December 20, 2021
AP St. 7-R	December 2, 2021	December 20, 2021
AP St. 8-R	December 2, 2021	December 20, 2021
AP St. 9-R	December 2, 2021	December 20, 2021
AP Exhibit TMD-1-R	December 2, 2021	December 20, 2021
AP Exhibit TMD-2-R	December 2, 2021	December 20, 2021
AP Exhibit TMD-3-R	December 2, 2021	December 20, 2021
AP Exhibit TMD-4-R	December 2, 2021	December 20, 2021
AP St. 10-R	December 2, 2021	December 20, 2021
AP Exhibit RFB-1-R	December 2, 2021	December 20, 2021
AP Exhibit RFB-2-R	December 2, 2021	December 20, 2021
AP Exhibit RFB-3-R	December 2, 2021	December 20, 2021
AP St. 5-SR	December 14, 20221	December 20, 2021
AP St. 5-RJ	December 17, 2021	December 20, 2021
AP St. 7-RJ	December 17, 2021	December 20, 2021
AP St. 8-RJ	December 17, 2021	December 20, 2021

AP St. 10-RJ	December 17, 2021	December 20, 2021
Aqua Hearing Exhibit 1	December 17, 2021	December 20, 2021