pennsylvania
DEPARTMENT OF TRANSPORTATION
www.dot.state.pa.us

2140 Herr Street
Harrisburg, PA 17103-5493

Final Construction Plan Submission to PUC
SR 83 Section 07

March 30, 2023

Dauphin County
Swatara Township
Paxtang Borough
SR 3013 (29th Street)
DOT # 592186 Y
PUC No. 2020-3021129
ECMS # 97828

Rosemary Chiavetta, Secretary
Pennsylvania Public Utility Commission
PO Box 3265
Harrisburg, PA 17105-3265

Dear Secretary Chiavetta,

In accordance with the ordering paragraph of PUC Docket No. A-2020-3021193 entered on 10/23/2020, please find attached for your approval a copy of the final signed Drawings for the Construction of State Route 83, Section 079 in Dauphin County). All of which includes: Construction Plan consisting of sheets 1, 18, 36, 37, 336, 351, 388, 389, 422, 435 of 435, a total of 10 sheets; Bridge 1 Plan S-39451 consisting of sheets 1 through 93 of 93 sheets, a total of 93 sheets; Signing and Pavement Marking Plan consisting of sheets 1. 91, 112 of 125, a total of 3 sheets; Traffic Control Plan consisting of sheets 1, 29, 32, 46,57 of 85 sheets, a total of 5 sheets. Erosion and Sediment Pollution Control Plan consisting of sheets 43, 62, 83, 87, 92 of 95 , a total of 5 sheets; Cross Sections consisting of sheets 1, 328 through 334 of 340 sheets, a total of 8 sheets.

The Department of Transportation hereby avers that a complete set of the aforesaid final Drawings for Construction plans are being sent to the following parties of record for examination simultaneously with this submission to the Public Utility Commission:

Mr. Douglas Starling, P.E.
Senior Engineer Public Improvement
Norfolk Southern Railroad Company
1200 Peachtree Street, N.E.
Atlanta, GA 30309
douglas.starling@nscorp.com

Ms. Julianne Freeman, Esq.
General Attorney
Norfolk Southern Railroad Company
Three Commercial Place
Norfolk, VA 23510-9241
Julianne.Freeman@nscorp.com

pennsylvania
DEPARTMENT OF TRANSPORTATION
www.dot.state.pa.us

Mr. Mike Pries, Chairman
Dauphin County Commissioners
Dauphin County Administrative Building
2 South Second Street, 4th Floor
Harrisburg, PA 17108
mpries@dauphinc.org

Mr. Jim Fosselman, Manager
Swatara Township
599 Eisenhower Boulevard
Harrisburg, PA 17111
jfosselman@swatara.com

Mr. Gerry Miller, Manager
Swatara Township Authority
599 Eisenhower Boulevard
PO Box 4920
Harrisburg, PA 17111
gmiller@sta4920.com

Mr. Kelden Stambaugh, Manager
Paxtang Borough
3423 Derry Street
Harrisburg, PA 17111
Paxtangchief-manager@comcast.net

Mr. Rob Zimmel
Verizon Pennsylvania LLC.
Strawberry Square
11th Floor PA 15226
Harrisburg, PA 17101
Robert.zimmel@verizon.com

Mr. Rob Januszko
Commonwealth Tele. DBA Frontier
93 Old Berwick Road
Drums, PA 18222
RobertJanuszko@frontiercorp.com

Mr. Mike Sweigard, Construction Specialist
Comcast Cable Communications, Inc.
4601 Smith Street
Harrisburg, PA 17109
mike_sweigard@cable.comcast.com

Ms. Charlotte Krupa
PPL Electric Utilities Corporation
Two North Ninth Street, GENN3
Allentown, PA 18101-1179
cakrupa@pplweb.com

Mr. David Hayward
Sunseys, LLC
11 Grandview Circle
Suite 220
Canonsburg, PA 15317
DHayward@sunseys.com

Mr. Scott Dreiling
XO/Verizon
630 Clark Avenue
King of Prussia 19406
Scott.dreiling@one.verizon.com

Mr. Chris Ricciuti
Zayo Group
170 Robbins Road
Downington, PA 19335
Chris.Ricciuti@zayo.com

pennsylvania
DEPARTMENT OF TRANSPORTATION
www.dot.state.pa.us

We respectfully request the approval of these plans and the subsequent issuance of a PUC Order. Should you have any questions or concerns, please feel free to contact me at (717) 787 – 4732

Sincerely,

Ahmed Laloudji
Engineering District 8-0
Department of Transportation

Attachments

cc: Parties of Record
Mark J. Chappell, P.E Chief, Utilities and Right-of-Way Section, 7th Floor, CKB
Karen L. Cummings, Senior Assistant Chief Counsel, 9th Floor, CKB
Willian Sinick, P.E, Manager, Rail Safety Division, PUC, 3rd Floor, CKB

DISTRICT	COUNTY	TOWNSHIP	CITY	ROUTE	SECTION	TOTAL SHEETS
8-0	DAUPHIN	SWATARA	HARRISBURG	0083	079	435
		PAXTANG BOROUGH		0230	045	
				3007	020	
				3013	009	

ECMS NO. 97828

COMMONWEALTH OF PENNSYLVANIA

DEPARTMENT OF TRANSPORTATION

DRAWINGS
FOR
CONSTRUCTION
OF

STATE ROUTE 0083 SECTION 079

IN DAUPHIN COUNTY

FROM STA. 39+50.00 TO STA. 140+00.00 LENGTH 9,950.00 FT. 1.884 MI.
NB FROM SEG. 0424 OFFSET 0974 TO SEG. 0444 OFFSET 1432
SB FROM SEG. 0425 OFFSET 0974 TO SEG. 0445 OFFSET 1406

AND

STATE ROUTE 0230 SECTION 045
FROM STA. 7+02.06 TO STA. 46+24.39 LENGTH 3,831.97 FT. 0.726 MI.
FROM SEG. 0080 OFFSET 0000 TO SEG. 0050 OFFSET 1103
FROM SEG. 0081 OFFSET 0000 TO SEG. 0051 OFFSET 1115

STATE ROUTE 3007 SECTION 020
FROM STA. 90+62.41 TO STA. 112+58.40 LENGTH 2095.99 FT. 0.397 MI.
FROM SEG. 0040 OFFSET 1794 TO SEG. 0070 OFFSET 0978

STATE ROUTE 3013 SECTION 009
FROM STA. 29+91.55 TO STA. 44+88.28 LENGTH 1,444.60 FT. 0.274 MI.
FROM SEG. 0010 OFFSET 0000 TO SEG. 0030 OFFSET 0169

ALSO

STATE ROUTE 3009
FROM STA. 15+43.84 TO STA. 21+49.44

STATE ROUTE 3010
FROM STA. 21+49.44 TO STA. 107+79.54

STATE ROUTE 8017
STATE ROUTE 8021
STATE ROUTE 9402
STATE ROUTE 9403

LIMITS OF SIGNING

STATE ROUTE 0083 SECTION 079
FROM STA. 23+00.00 TO STA 131+63.70

ALSO INCLUDED

TRAFFIC CONTROL PLAN	85 SHEETS
SIGNING AND PAVEMENT MARKING PLAN	125 SHEETS
WATER UTILITY RELOCATION PLAN	27 SHEETS
SEWER UTILITY RELOCATION PLAN	17 SHEETS
UTILITY PLAN - RETIRED IN PLACE STEAM DEMOLITION	7 SHEETS
NATURAL GAS UTILITY RELOCATION PLAN	3 SHEETS
EROSION AND SEDIMENT POLLUTION CONTROL PLAN	95 SHEETS
HIGHWAY LIGHTING PLAN	20 SHEETS
ITS PLAN	41 SHEETS
BORING LOCATION PLAN	3 SHEETS
TRAFFIC SIGNAL PLAN	46 SHEETS
POST-CONSTRUCTION STORM WATER MANAGEMENT PLAN	56 SHEETS
STRUCTURE PLANS	
S-39451	93 SHEETS
S-39452	70 SHEETS
S-39453	78 SHEETS
S-40308	3 SHEETS
S-40312	13 SHEETS
S-40313	13 SHEETS
S-40314	39 SHEETS
S-40315	16 SHEETS
S-40316	23 SHEETS
S-40317	12 SHEETS
S-40318	31 SHEETS
S-40319	40 SHEETS
CROSS SECTIONS	340 SHEETS
EXISTING STRUCTURE PLANS	
S-2384	6 SHEETS
S-2386	9 SHEETS
S-2387	6 SHEETS
S-7173	19 SHEETS
S-9870	10 SHEETS
S-12141	6 SHEETS
S-18035	3 SHEETS

SR 0083 RE-ESTABLISHED AS A LIMITED ACCESS HIGHWAY FROM
STATION 29+38.41 TO STATION 83+24.00
LEGISLATIVE ROUTE 767 SECTION A14 R/W(B)
APPROVED MARCH 4, 1994.

SR 0083 RE-ESTABLISHED AS A LIMITED ACCESS HIGHWAY FROM
STATION 47+87.56 TO STATION 122+24.83
STATE ROUTE 0083 SECTION 079 GR/W
APPROVED OCTOBER 4, 2022.

SR 0083 RE-ESTABLISHED AS A LIMITED ACCESS HIGHWAY FROM
STATION 48+10.62 TO STATION 131+30.00
STATE ROUTE 0083 SECTION A79 R/W
APPROVED JULY 12, 2022.

SR 0083 ESTABLISHED AS A LIMITED ACCESS HIGHWAY FROM
STATION 83+64.88 TO STATION 197+67.89
LEGISLATIVE ROUTE 767 PARALLEL, SECTION 3
APPROVED JULY 24, 1952.

SCALE

HORIZONTAL 0 25 50 FEET

VERTICAL 0 5 10 FEET

DESIGN DESIGNATION

HIGHWAY CLASSIFICATION	- URBAN INTERSTATE
DESIGN SPEED	- 60 MPH
PAVEMENT WIDTH	- 3 TO 4 - 12' LANES
SHOULDER WIDTH	- VARIES 10' TO 14'

TRAFFIC DATA

CURRENT A.D.T.	- 135,569 (2022)
DESIGN YEAR A.D.T.	- 168,210 (2050)
D.H.V.	- 13,677 (2050)
D	- 55%
T	- 16%

PREPARED BY:
HNTB CORPORATION
4507 NORTH FRONT STREET
SUITE 300
HARRISBURG, PA 17110

COMMONWEALTH OF PENNSYLVANIA
REGISTERED PROFESSIONAL
JOACHIM J. ALFIERI
ENGINEER
039743-E

Joachim J. Alfieri
PROFESSIONAL ENGINEER

DATE: March 28, 2023

RECOMMENDED DATE: _____
PROJECT MANAGER

RECOMMENDED DATE: _____
DISTRICT EXECUTIVE

RECOMMENDED DATE: _____
DEPUTY SECRETARY

RECOMMENDED DATE: _____
ACTING SECRETARY OF TRANSPORTATION
(ON BEHALF OF THE GOVERNOR AS WELL AS THE SECRETARY)

DISTRICT	COUNTY	ROUTE	SECTION	SHEET
8-0	DAUPHIN	0083	079	18 OF 435
		0230	045	
		3007	020	
		3013	009	

CITY OF HARRISBURG, SWATARA TWP, PAXTANG BOROUGH

REVISION NUMBER	REVISIONS	DATE	BY

TABULATION OF STRUCTURE DATA

EXISTING

EXISTING STRUCTURE DATA

SR 0083 OVER ABANDONED RAILROAD SIDING
STATION: 121+10.50
TYPE OF STRUCTURE: 3-SPAN ROLLED STEEL I-BEAM
SPAN LENGTHS:
SPAN 1 = 60'-0"
SPAN 2 = 60'-0"
SPAN 3 = 60'-0"
VERTICAL CLEAR: N/A
SKEW: 50°57'00"
CLEAR ROADWAY WIDTH:
NORTHBOUND = 33'-0"
SOUTHBOUND = 33'-0"
STRUCTURE NO: S-2386 & S-18035 (REHAB)

EXISTING STRUCTURE DATA

SR 3007 (19TH STREET) OVER SR 0083
STATION: 101+31.64
TYPE OF STRUCTURE: REINFORCED CONCRETE RIGID FRAME
SPAN LENGTH: 69'-0 ½"
VERTICAL CLEAR: 14'-3"
SKEW: 81°48'15"
CLEAR ROADWAY WIDTH: 46'-0"
STRUCTURE NO: S-2384

EXISTING STRUCTURE DATA

SR 3013 (29TH STREET) OVER SR 0083
STATION: 8+25.96
TYPE OF STRUCTURE: REINFORCED CONCRETE RIGID FRAME
SPAN LENGTH: 68'-7"
VERTICAL CLEAR: 14'-0"
SKEW: 87°10'00"
CLEAR ROADWAY WIDTH: 40'-0"
STRUCTURE NO: S-2387

EXISTING STRUCTURE DATA

SR 3013 (29TH STREET) OVER NORFOLK SOUTHERN RAILWAY COMPANY
STATION: 9+52.41
TYPE OF STRUCTURE: 2-SPAN P/S CONCRETE ADJACENT BOX BEAM
SPAN LENGTHS:
SPAN 1: 59'-3"
SPAN 2: 37'-0"
VERTICAL CLEAR: 21'-11"
SKEW: 84°55'00"
CLEAR ROADWAY WIDTH: 40'-0"
STRUCTURE NO: S-9870

EXISTING STRUCTURE DATA

SR 3007 (19TH STREET) OVER NORFOLK SOUTHERN RAILWAY COMPANY
STATION: 103+34.04
TYPE OF STRUCTURE: 2-SPAN P/S CONCRETE I-BEAM
SPAN LENGTHS:
SPAN 1: 65'-0"
SPAN 2: 33'-9"
VERTICAL CLEAR:
NS INDUSTRY TRACK = 19'-2"
NS MAINLINE TRACK = 27'-4"
SKEW: 74°53'22"
CLEAR ROADWAY WIDTH: 46'-0"
STRUCTURE NO: S-7173

PROPOSED

PROPOSED STRUCTURE DATA

SR 3013 (29TH STREET) OVER SR 0083 AND NORFOLK SOUTHERN RAILWAY COMPANY
STATION: 37+78.24
TYPE OF STRUCTURE: 3-SPAN P/S CONCRETE PA BULB-TEE BEAM
SPAN LENGTHS:
SPAN 1 = 95'-0"
SPAN 2 = 100'-0"
SPAN 3 - 97'-0"
VERTICAL CLEAR:
SR 0083 = 20'-7"
NS MAINLINE TRACK = 23'-3"
SKEW: 87°25'29"
CLEAR ROADWAY WIDTH: 32'-0"
STRUCTURE NO: S-39451

PROPOSED STRUCTURE DATA

SR 3007 (19TH STREET) OVER NORFOLK SOUTHERN RAILWAY COMPANY
STATION: 103+30.88
TYPE OF STRUCTURE: 1-SPAN P/S CONCRETE PA BULB-TEE BEAM
SPAN LENGTH: 115'-0"
VERTICAL CLEAR:
NS INDUSTRY TRACK = 19'-4"
NS MAINLINE TRACK = 30'-6"
SKEW: 75°00'00"
CLEAR ROADWAY WIDTH: 56'-0"
STRUCTURE NO: S-39452

PROPOSED STRUCTURE DATA

SR 3007 (19TH STREET) OVER SR 0083 AND SR 8019 (RAMP T)
STATION: 100+84.74
TYPE OF STRUCTURE: 2-SPAN P/S CONCRETE PA BULB-TEE BEAM
SPAN LENGTHS:
SPAN 1 = 105'-0"
SPAN 2 = 108'-0"
VERTICAL CLEAR:
SR 0083 = 16'-9"
SR 8019 (RAMP T) = 21'-1"
SKEW: 80°59'10"
CLEAR ROADWAY WIDTH: 56'-0"
STRUCTURE NO: S-39453

STATION 104+18.94 TO 104+90.69 SR 3007
TYPE OF STRUCTURE: REINFORCED CONCRETE RETAINING WALL
STRUCTURE NO: S-40312

STATION 83+72.04 TO 85+41.03 SR 0083
TYPE OF STRUCTURE: SOLDIER PILE RETAINING WALL
STRUCTURE NO: S-40313

STATION 950+35.07 TO 955+86.86 SR 8021 RAMP V
TYPE OF STRUCTURE: REINFORCED CONCRETE AND SOLDIER PILE RETAINING WALL
STRUCTURE NO: S-40314

STATION 90+98.30 TO 97+00.00 SR 0083
TYPE OF STRUCTURE: GROUND MOUNTED SOUND BARRIER
STRUCTURE NO: S-40315

STATION 953+71.11 TO 957+15.32 SR 8021 RAMP V
TYPE OF STRUCTURE: SOLDIER PILE RETAINING WALL WITH SOUND BARRIER
STRUCTURE NO: S-40316

STATION 950+80.88 TO 953+71.11 SR 8021 RAMP V
TYPE OF STRUCTURE: GROUND MOUNTED SOUND BARRIER
STRUCTURE NO: S-40317

STATION 904+53.86 TO 909+03.26 SR 8021 RAMP U
TYPE OF STRUCTURE: REINFORCED CONCRETE RETAINING WALL
STRUCTURE NO: S-40318

STATION 73+72.65 SR 0083 TO 908+62.54 SR 8021 RAMP U
TYPE OF STRUCTURE: REINFORCED CONCRETE RETAINING WALL
STRUCTURE NO: S-40319

COMMONWEALTH OF PENNSYLVANIA
REGISTERED PROFESSIONAL
CHRISTOPHER M. DEATS
ENGINEER
PE079050

3/29/2023
FILENAME: 63016.079-s-cv-str01.dgn

DISTRICT	COUNTY	ROUTE	SECTION	SHEET
8-0	DAUPHIN	0083	079	36 OF 435
		0230	045	
		3007	020	
		3013	009	

CITY OF HARRISBURG, SWATARA TWP, PAXTANG BOROUGH

REVISION NUMBER	REVISIONS	DATE	BY

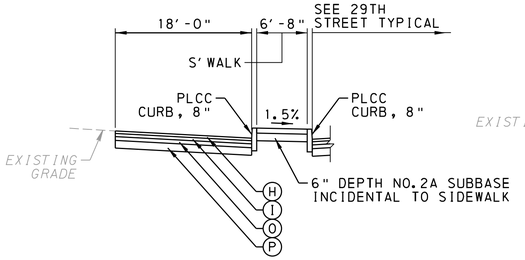

TYPICAL SIDEWALK SECTION
SR 3013 (29TH STREET), LT

STA 30+42.15 TO STA 31+71.32
NOT TO SCALE

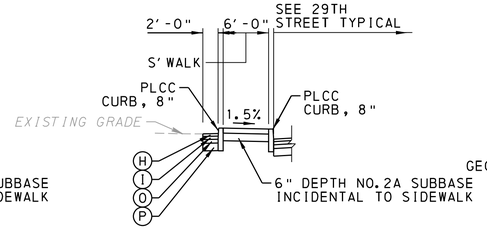

TYPICAL SIDEWALK SECTION
SR 3013 (29TH STREET), LT

STA 31+71.32 TO STA 31+98.45
NOT TO SCALE

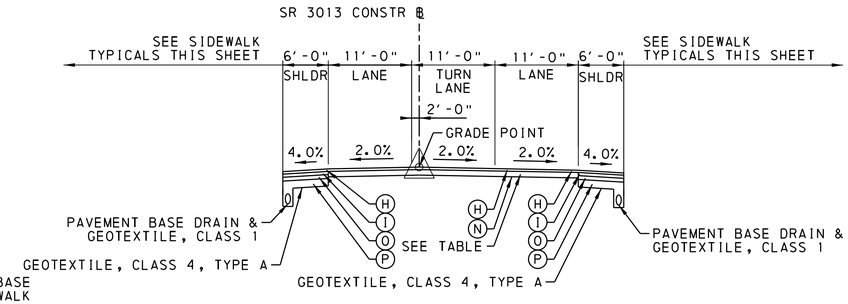

TYPICAL TANGENT SECTION
SR 3013 (29TH STREET)

STA 30+05.40 TO STA 32+12.52
NOT TO SCALE
*SEE DETAILS FOR DRIVEWAY LOCATIONS

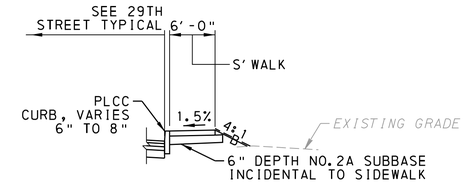

TYPICAL SIDEWALK SECTION
SR 3013 (29TH STREET), RT

STA 30+40.30 TO STA 31+01.10
STA 33+37.52 TO STA 33+74.35
NOT TO SCALE

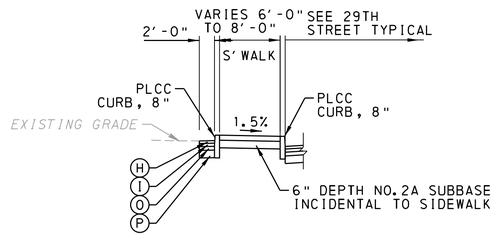

TYPICAL SIDEWALK SECTION
SR 3013 (29TH STREET), LT

STA 31+98.45 TO STA 34+51.52
NOT TO SCALE

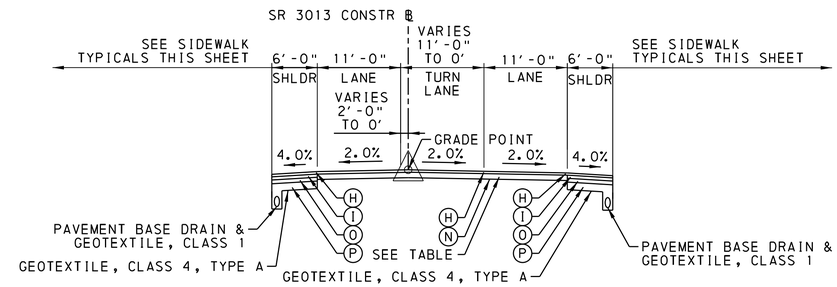

TYPICAL TANGENT SECTION
SR 3013 (29TH STREET)

STA 32+12.52 TO STA 34+51.52
NOT TO SCALE
*SEE DETAILS FOR DRIVEWAY LOCATIONS

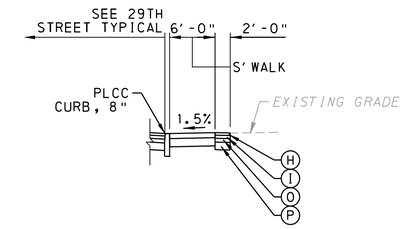

TYPICAL DEPRESSED SIDEWALK SECTION
SR 3013 (29TH STREET), RT

STA 31+35.66 TO STA 33+37.52
NOT TO SCALE

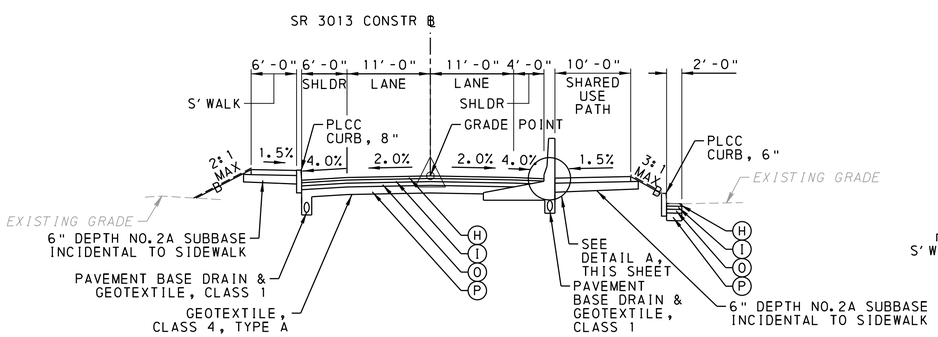

TYPICAL TANGENT SECTION
SR 3013 (29TH STREET)

STA 34+51.52 TO STA 36+50.72
*SEE STRUCTURE PLANS FOR LIMITS OF MOMENT SLABS
NOT TO SCALE

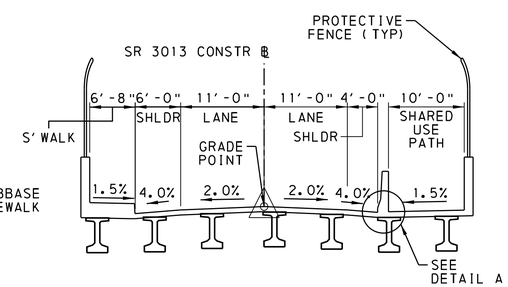

TYPICAL TANGENT SECTION
SR 3013 (29TH STREET)

STA 36+50.72 TO STA 40+05.76
NOT TO SCALE

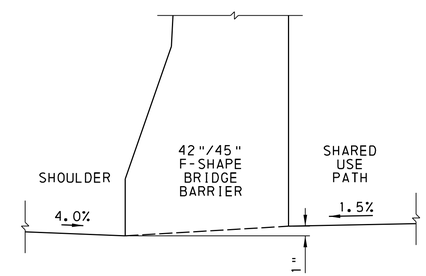

DETAIL A
NOT TO SCALE

LEGEND

(H) SUPERPAVE ASPHALT MIXTURE DESIGN, WEARING COURSE, RPS, PG 64E-22, 3 TO <10 MILLION ESALS, 12.5 MM MIX, 2" DEPTH, SRL-E

(I) SUPERPAVE ASPHALT MIXTURE DESIGN, BINDER COURSE, RPS, PG 64E-22, 3 TO <10 MILLION ESALS, 19.0 MM MIX, 2 1/2" DEPTH

(O) SUPERPAVE ASPHALT MIXTURE DESIGN, BASE COURSE, PG 64S-22, 3 TO <10 MILLION ESALS, 25.0 MM MIX, 3" DEPTH

(P) SUBBASE 6" DEPTH (NO. 2A)

(N) MILLING OF ASPHALT PAVEMENT SURFACE, 2 1/2" DEPTH, MILLED MATERIAL RETAINED BY CONTRACTOR

---B--- SEEDING AND SOIL SUPPLEMENT - FORMULA D

——L—— SEEDING AND SOIL SUPPLEMENT - FORMULA L

NOTE: 1. APPLY ASPHALT TACK COAT BETWEEN ALL PAVEMENT LAYERS
2. FOR LANE CONFIGURATIONS SEE SIGNING AND PAVEMENT MARKING PLAN

DEPTH	REQUIRED PAVEMENT COURSES
>1", <2.5"	SUPERPAVE ASPHALT MIXTURE DESIGN WEARING COURSE (LEVELING), PG 64S-22, 3 TO < 10 MILLION ESALS, 9.5 MM MIX, SRL-L (MIN 1", MAX 2.5" DEPTH)
>2.5", <=6.0"	SUPERPAVE ASPHALT MIXTURE DESIGN WEARING COURSE (LEVELING), PG 64S-22, 3 TO < 10 MILLION ESALS, 9.5 MM MIX, SRL-L (MIN 1", MAX 2.5" DEPTH) + SUPERPAVE ASPHALT MIXTURE DESIGN BINDER COURSE (LEVELING), PG 64S-22, 3 TO < 10 MILLION ESALS, 19.0 MM MIX (MIN 2", MAX 4.5" DEPTH)

COMMONWEALTH OF PENNSYLVANIA
REGISTERED PROFESSIONAL
CHRISTOPHER M. DEATS
ENGINEER
PE079050

3/29/2023
FILENAME: 63016.079-s-cv-typ17.dgn

DISTRICT	COUNTY	ROUTE	SECTION	SHEET
8-0	DAUPHIN	0083	079	37 OF 435
		0230	045	
		3007	020	
		3013	009	

CITY OF HARRISBURG, SWATARA TWP, PAXTANG BOROUGH

REVISION NUMBER	REVISIONS	DATE	BY

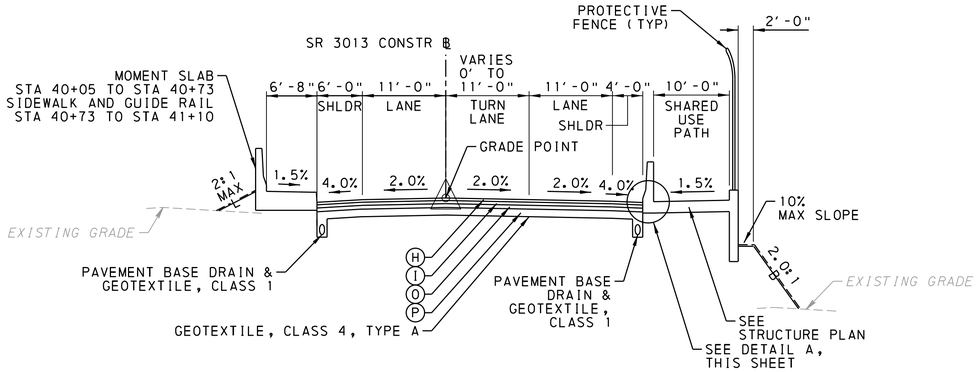

TYPICAL TANGENT SECTION
SR 3013 (29TH STREET)
STA 40+05.76 TO STA 41+10.20
NOT TO SCALE

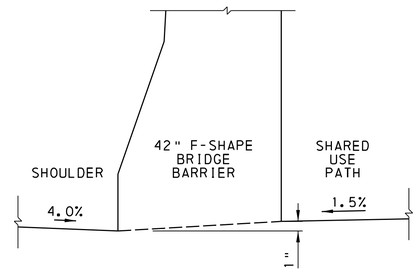

DETAIL A
NOT TO SCALE

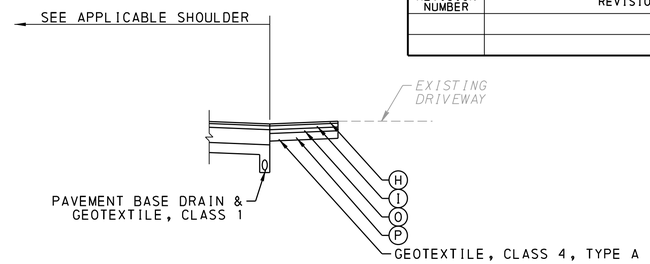

COMMERCIAL DRIVEWAYS
FULL DEPTH

SR 0230 STA 14+00.00 RT
SR 0230 STA 14+50.00 LT
SR 0230 STA 19+25.00 RT
SR 0230 STA 20+00.00 LT
SR 3013 STA 31+60.00 LT
SR 3013 STA 32+10.00 LT
SR 3013 STA 33+25.00 LT
SR 3013 STA 33+80.00 LT
SR 3013 STA 34+60.00 LT
NOT TO SCALE

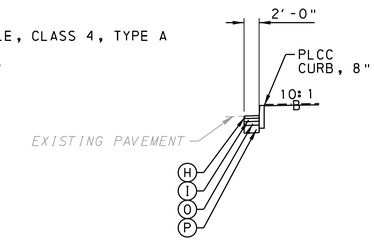

WISTER STREET
SEE INTERSECTION DETAILS
NOT TO SCALE

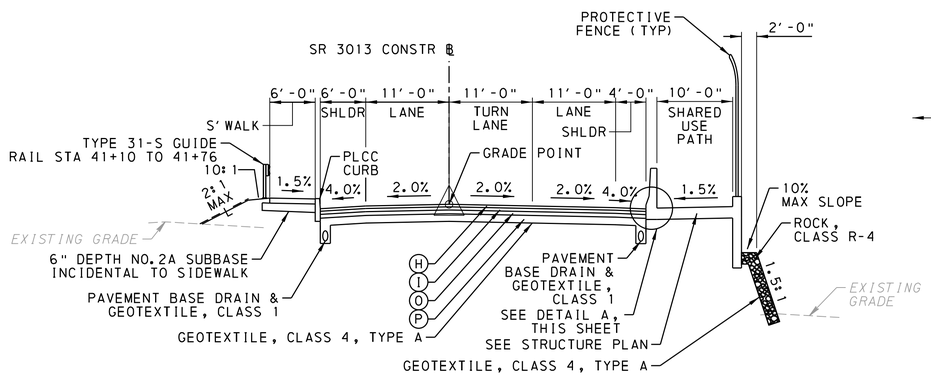

TYPICAL TANGENT SECTION
SR 3013 (29TH STREET)
STA 41+10.20 TO STA 43+02.05
NOT TO SCALE

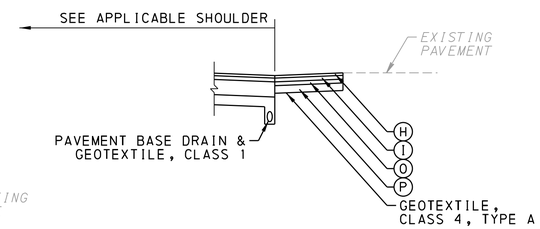

LOCAL ROADS

SR 0230 STA 25+50.00 LT
SR 0230 STA 30+15.00 LT
SR 0230 STA 32+60.00 LT
SR 3007 STA 94+25.00 RT
SR 3007 STA 96+80.00 RT
SR 3007 STA 105+40.00 RT
SR 3013 STA 31+10.00 RT
18TH STREET (SEE INTERSECTION DETAILS)
NOT TO SCALE

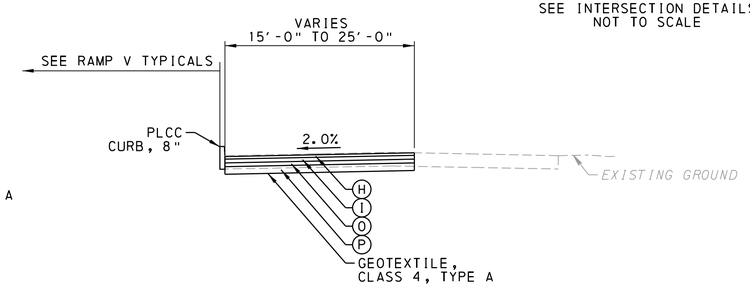

TYPICAL TANGENT SECTION
SOUTH 20TH STREET & YATES ALLEY
STA 10+00.00 TO STA 14+79.34
NOT TO SCALE

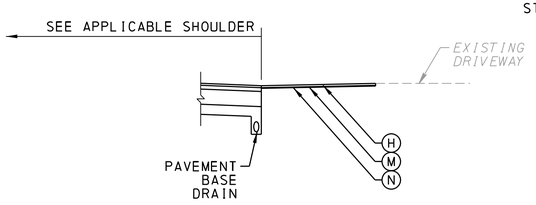

COMMERCIAL DRIVEWAYS
MILLING AND OVERLAY

SR 0230 STA 11+85.00 LT
SR 0230 STA 11+85.00 RT
SR 0230 STA 14+90.00 RT
NOT TO SCALE

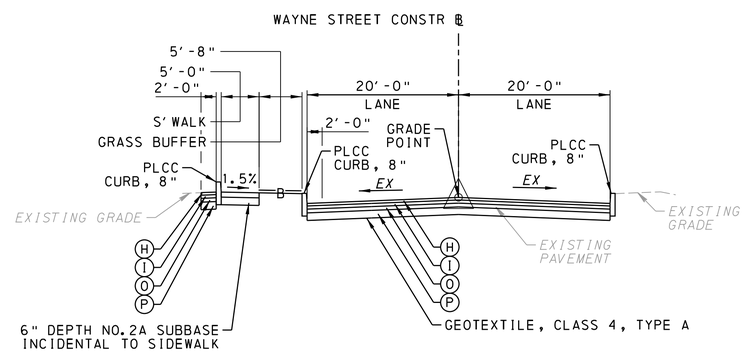

TYPICAL TANGENT SECTION
WAYNE STREET
STA 930+15.00 TO STA 930+90.00
NOT TO SCALE

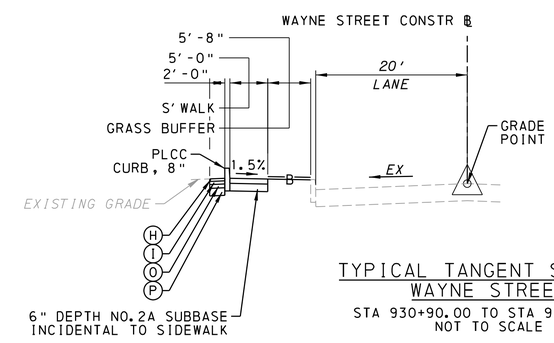

TYPICAL TANGENT SECTION
WAYNE STREET
STA 930+90.00 TO STA 931+57.57
NOT TO SCALE

LEGEND

- (H) SUPERPAVE ASPHALT MIXTURE DESIGN, WEARING COURSE, RPS, PG 64E-22, 3 TO <10 MILLION ESALS, 12.5 MM MIX, 2" DEPTH, SRL-E
- (I) SUPERPAVE ASPHALT MIXTURE DESIGN, BINDER COURSE, RPS, PG 64E-22, 3 TO <10 MILLION ESALS, 19.0 MM MIX, 2 1/2" DEPTH
- (O) SUPERPAVE ASPHALT MIXTURE DESIGN, BASE COURSE, PG 64S-22, 3 TO <10 MILLION ESALS, 25.0 MM MIX, 3" DEPTH
- (P) SUBBASE 6" DEPTH (NO. 2A)
- (M) SUPERPAVE ASPHALT MIXTURE DESIGN, WEARING COURSE (SCRATCH), PG 64S-22, 3 TO < 10 MILLION ESALS, 9.5 MM MIX, SRL-L (0.5" MIN DEPTH)
- (N) MILLING OF ASPHALT PAVEMENT SURFACE, 2 1/2" DEPTH, MILLED MATERIAL RETAINED BY CONTRACTOR
- —B— - SEEDING AND SOIL SUPPLEMENT - FORMULA B

NOTE:
1. APPLY ASPHALT TACK COAT BETWEEN ALL PAVEMENT LAYERS
2. FOR LANE CONFIGURATIONS SEE SIGNING AND PAVEMENT MARKING PLAN

COMMONWEALTH OF PENNSYLVANIA
REGISTERED PROFESSIONAL
CHRISTOPHER M. DEATS
ENGINEER
PE079050

3/29/2023
FILENAME: 63016_079-s-cv-typ18.dgn

SEE SHEET 351 OF 435

DISTRICT	COUNTY	ROUTE	SECTION	SHEET
8-0	DAUPHIN	0083	079	336 OF 435
		0230	045	
		3007	020	
		3013	009	

CITY OF HARRISBURG, SWATARA TWP, PAXTANG BOROUGH

REVISION NUMBER	REVISIONS	DATE	BY

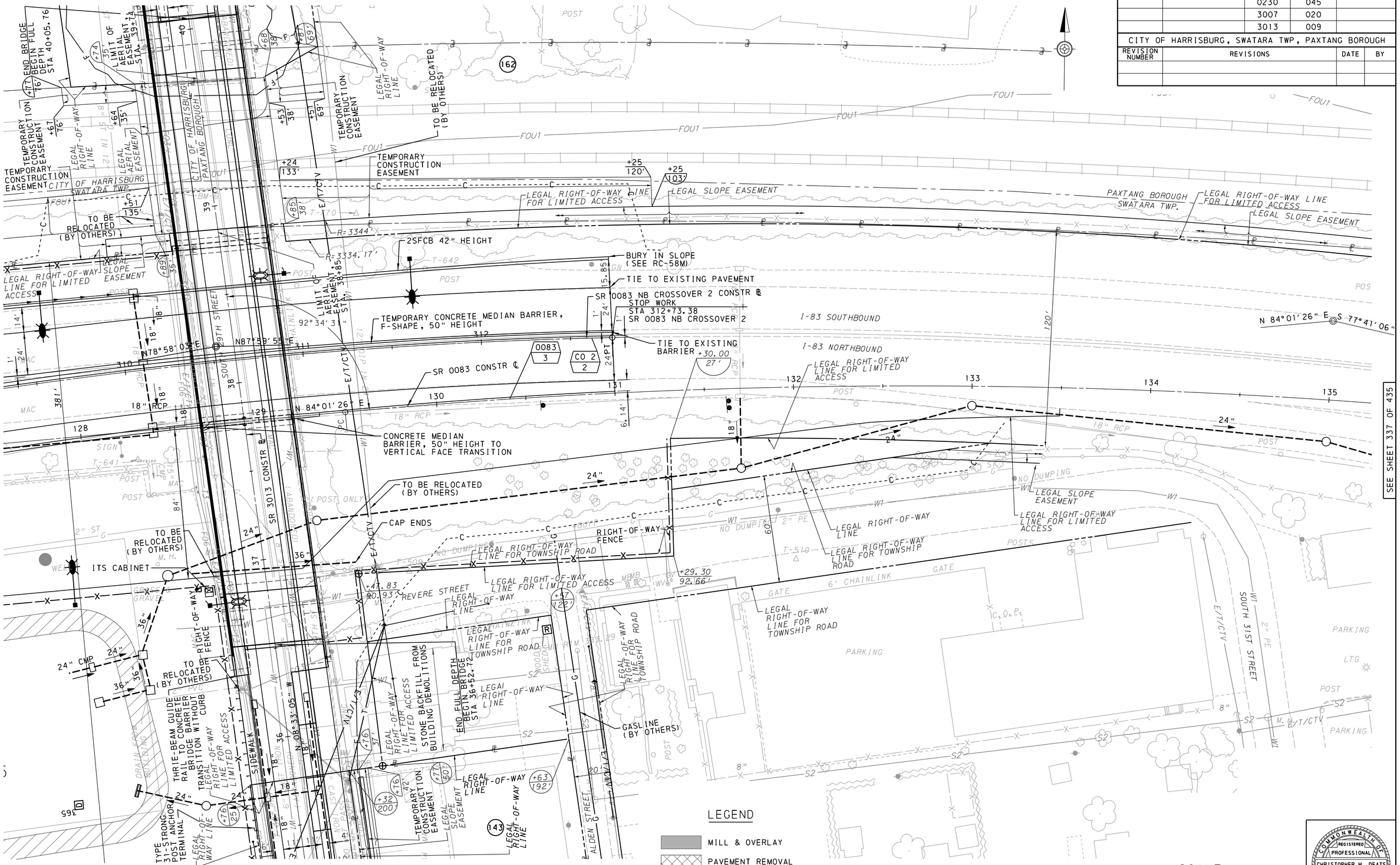

LEGEND

- MILL & OVERLAY
- PAVEMENT REMOVAL
- BASIN ACCESS ROAD

SCALE

0 25 50 FEET

FOR STRUCTURE DATA SEE SHEET 18	FOR SR 0083 NB CROSSOVER 2 PROFILE, SEE SHEET 368
FOR PROPERTY OWNER INFO SEE SHEET 5	FOR SR 3013 PROFILE, SEE SHEETS 388 & 389
FOR CURVE DATA SEE SHEETS 14-17	FOR SR 0083 PROFILE, SEE SHEETS 364

SEE SHEET 349 OF 435

SURVEY BOOK NOS. 7127, 7128, 7152, 7153

COMMONWEALTH OF PENNSYLVANIA
REGISTERED PROFESSIONAL
CHRISTOPHER M. DEATS
ENGINEER
PE079050

3/29/2023
FILENAME: 63016_079-s-cv-pln14.dgn

DISTRICT	COUNTY	ROUTE	SECTION	SHEET
8-0	DAUPHIN	0083	079	351 OF 435
		0230	045	
		3007	020	
		3013	009	

CITY OF HARRISBURG, SWATARA TWP, PAXTANG BOROUGH

REVISION NUMBER	REVISIONS	DATE	BY

SEE SHEET 336 OF 435

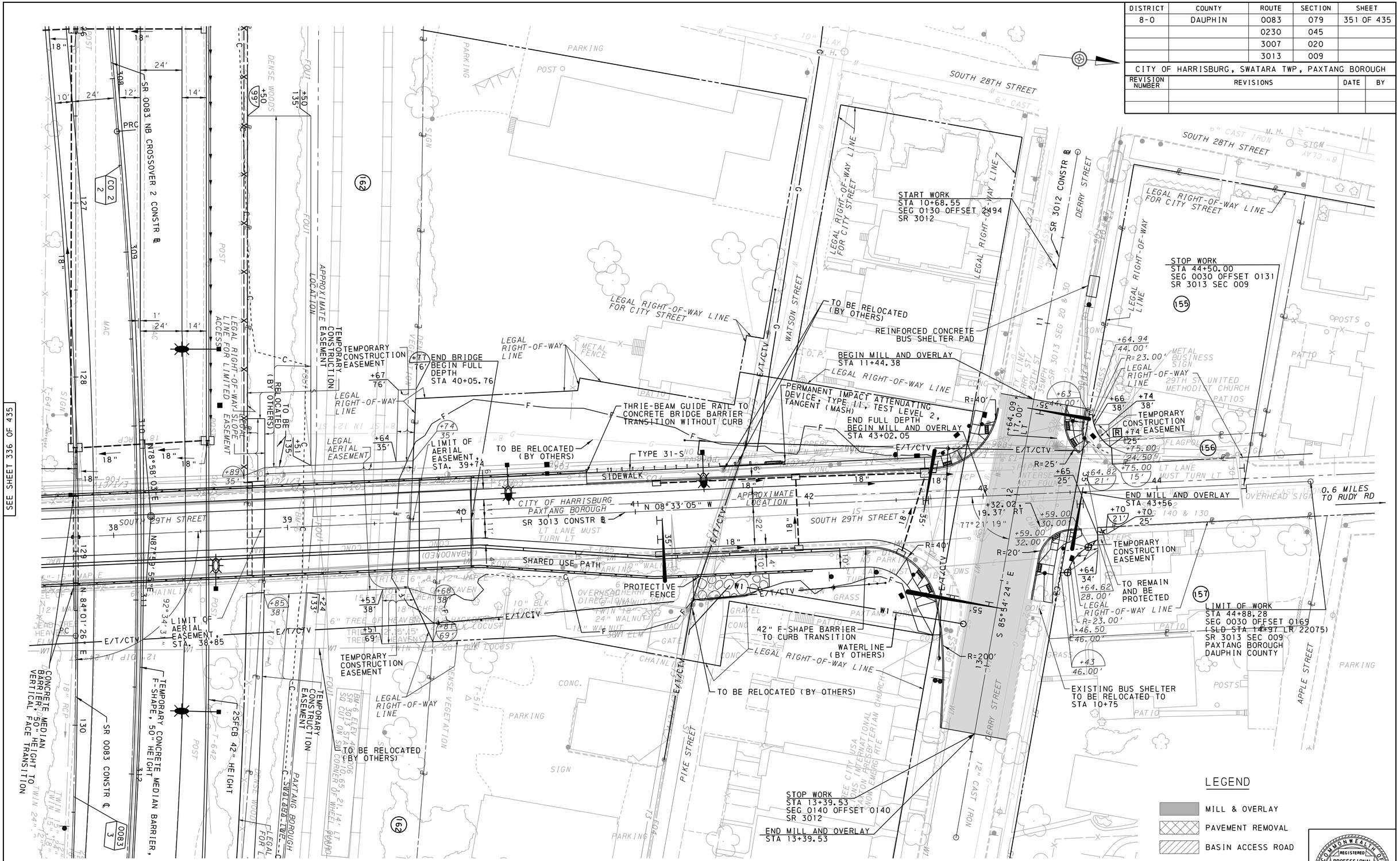

FOR STRUCTURE DATA SEE SHEET 18

FOR PROPERTY OWNER INFO SEE SHEET 5

FOR CURVE DATA SEE SHEETS 14-17

FOR SR 3013 PROFILE, SEE SHEETS 389 & 390

SURVEY BOOK NOS. 7127, 7128, 7152, 7153

3/29/2023
FILENAME: 63016_079-s-cv-pln29.dgn

DISTRICT	COUNTY	ROUTE	SECTION	SHEET
8-0	DAUPHIN	0083	079	388 OF 435
		0230	045	
		3007	020	
		3013	009	
SWATARA TWP				

REVISION NUMBER	REVISIONS	DATE	BY

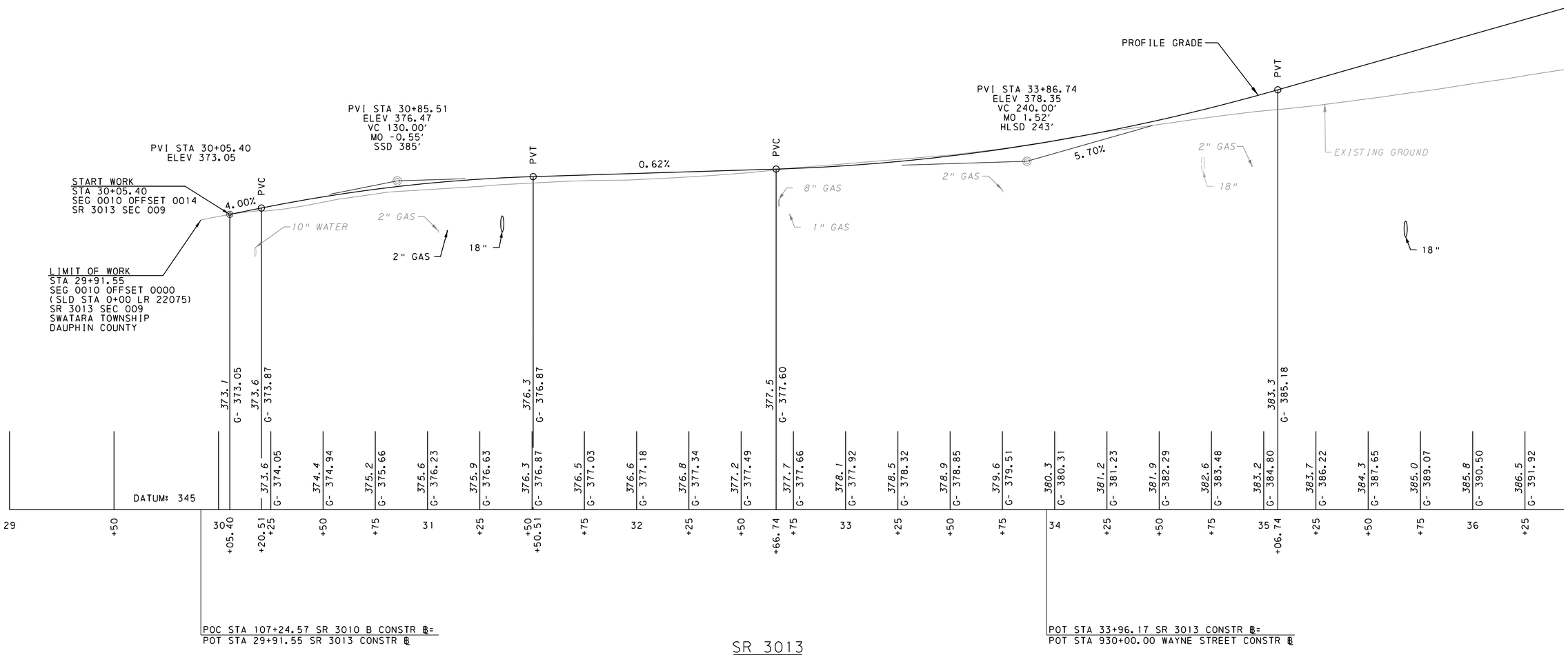

SEE SHEET 389 OF 435

SCALE

HORIZONTAL: 0 25 50 FEET

VERTICAL: 0 5 10 FEET

COMMONWEALTH OF PENNSYLVANIA
REGISTERED PROFESSIONAL
CHRISTOPHER M. DEATS
ENGINEER
PE079050

FOR PLAN, SEE SHEETS 336 & 349

3/29/2023
FILENAME: 63016.079-s-cv-pr37.dgn

DISTRICT	COUNTY	ROUTE	SECTION	SHEET
8-0	DAUPHIN	0083	079	389 OF 435
		0230	045	
		3007	020	
		3013	009	

CITY OF HARRISBURG, SWATARA TWP, PAXTANG BOROUGH

REVISION NUMBER	REVISIONS	DATE	BY

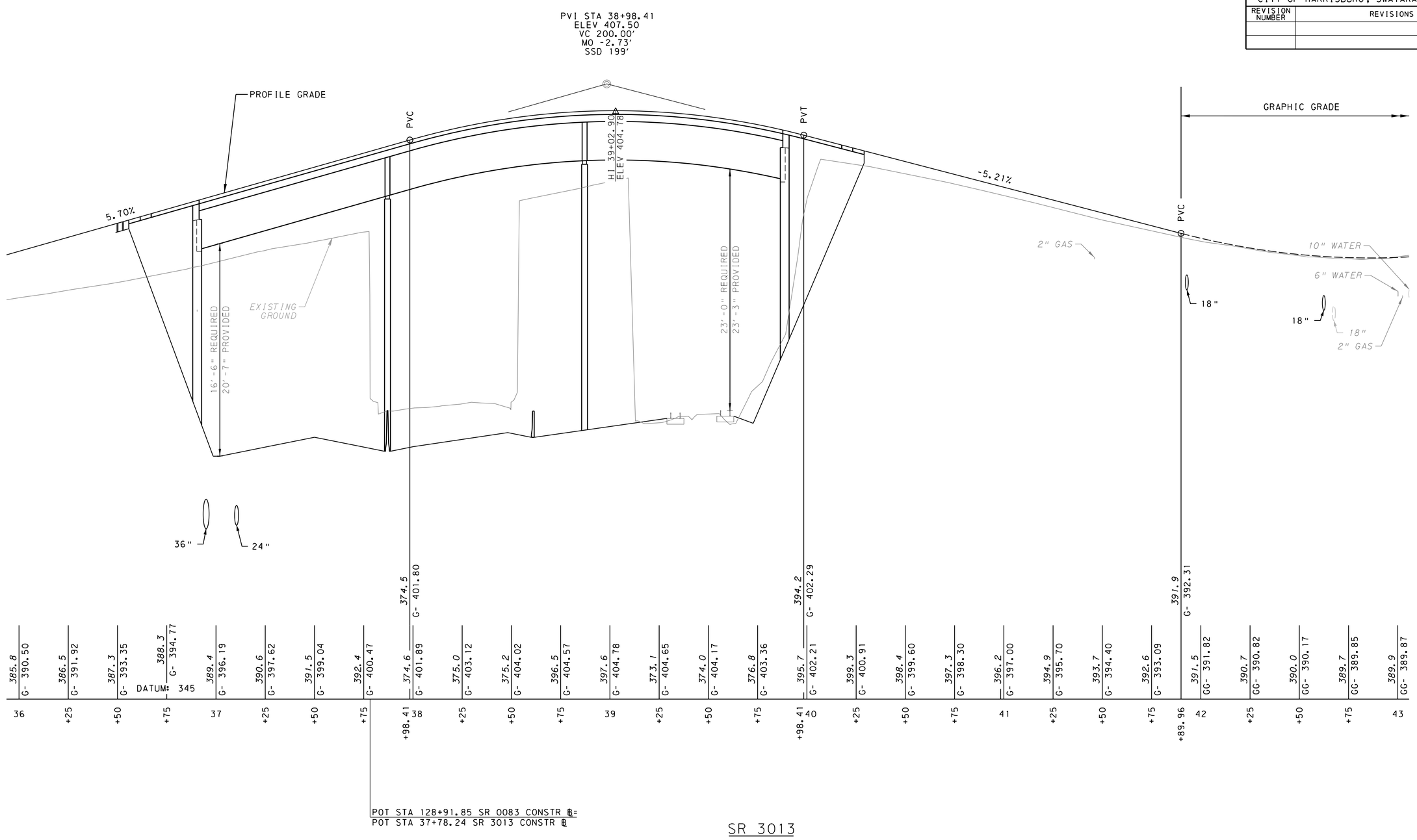

SEE SHEET 388 OF 435

SEE SHEET 390 OF 435

SCALE

HORIZONTAL: 0 25 50 FEET

VERTICAL: 0 5 10 FEET

COMMONWEALTH OF PENNSYLVANIA
REGISTERED PROFESSIONAL ENGINEER
CHRISTOPHER M. DEATS
PE079050

FOR PLAN, SEE SHEETS 336, 349 & 351

3/29/2023
FILENAME: 63016_079-s-cv-pr138.dgn

SEE SHEET 435 OF 435

DISTRICT	COUNTY	ROUTE	SECTION	SHEET
8-0	DAUPHIN	0083	079	422 OF 435
		0230	045	
		3007	020	
		3013	009	
SWATARA TWP				

REVISION NUMBER	REVISIONS	DATE	BY

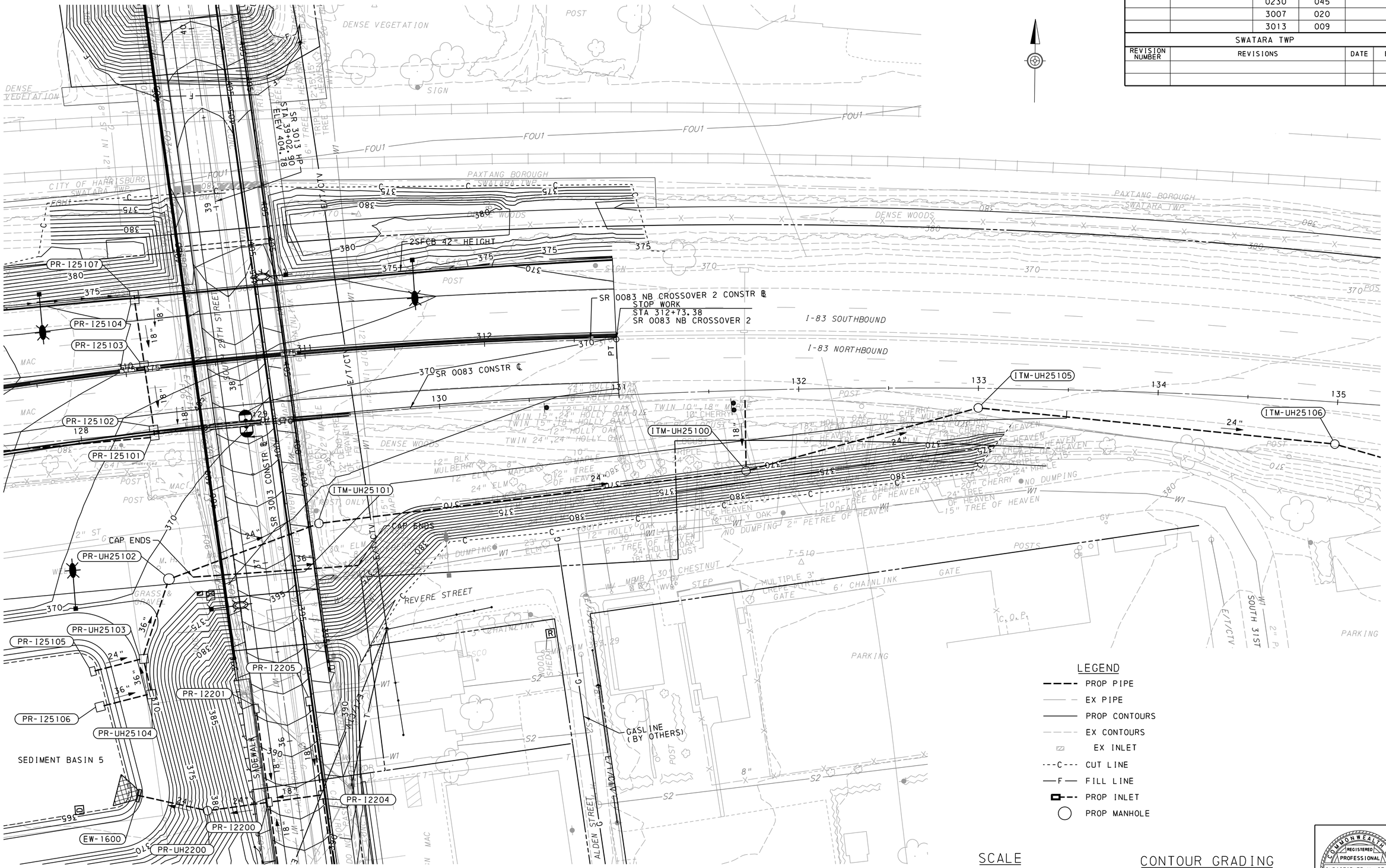

SEE SHEET 421 OF 435

SEE SHEET 423 OF 435

CONTOUR GRADING AND DRAINAGE PLAN

COMMONWEALTH OF PENNSYLVANIA
REGISTERED PROFESSIONAL
CHRISTOPHER M. DEATS
ENGINEER
PE079050

FOR PROPERTY OWNER INFO SEE SHEET 5

FOR CURVE DATA SEE SHEETS 14-17

SEE SHEET 434 OF 435

SURVEY BOOK NOS. 7127, 7128, 7152, 7153

3/29/2023
FILENAME 63016_079-s-cv-grd09.dgn

DISTRICT	COUNTY	ROUTE	SECTION	SHEET
8-0	DAUPHIN	0083	079	435 OF 435
		0230	045	
		3007	020	
		3013	009	

CITY OF HARRISBURG, SWATARA TWP, PAXTANG BOROUGH

REVISION NUMBER	REVISIONS	DATE	BY

SEE SHEET 422 OF 435

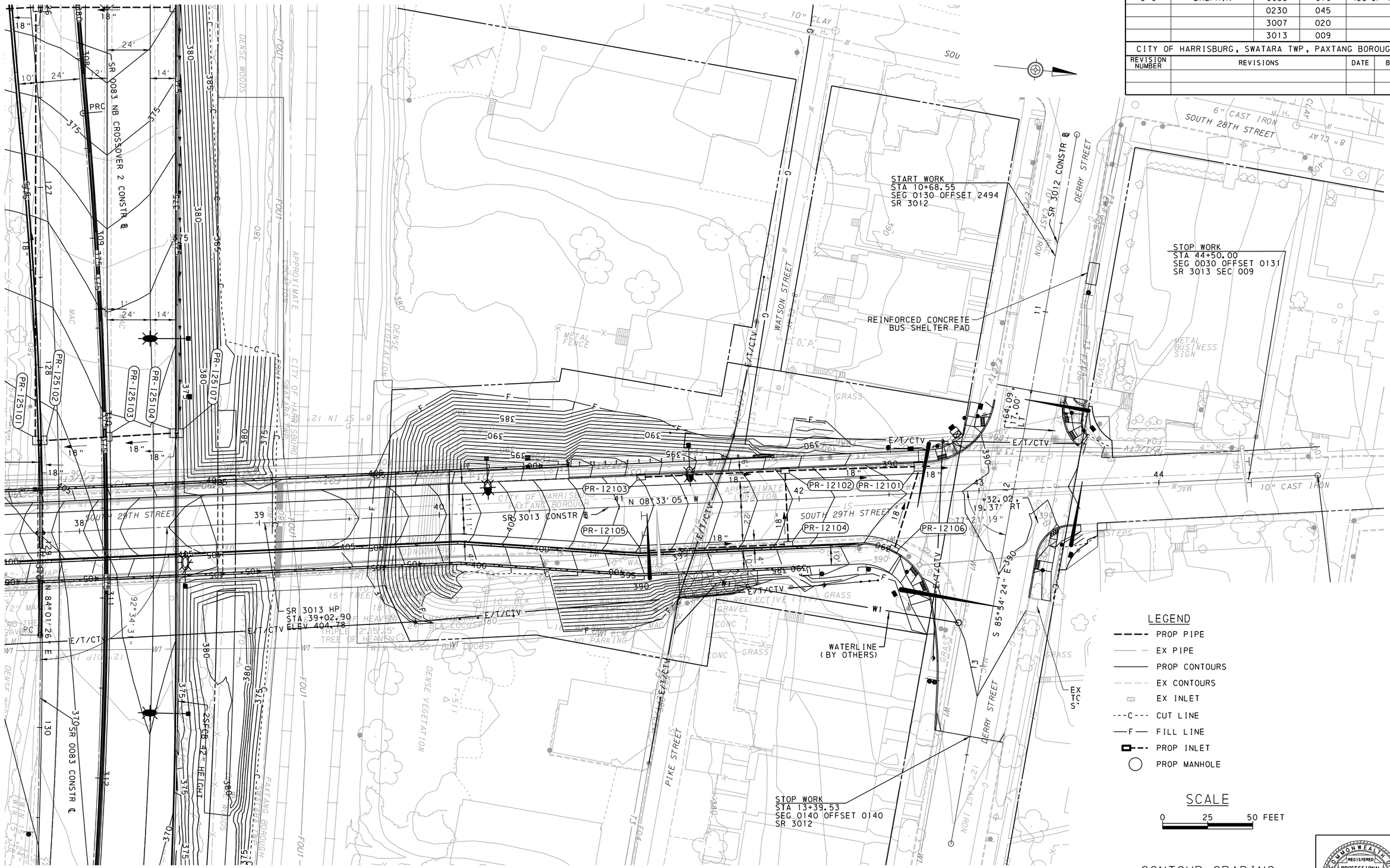

LEGEND

- PROP PIPE
- EX PIPE
- PROP CONTOURS
- EX CONTOURS
- EX INLET
- ---C--- CUT LINE
- —F— FILL LINE
- PROP INLET
- PROP MANHOLE

SCALE

0 25 50 FEET

CONTOUR GRADING AND DRAINAGE PLAN

COMMONWEALTH OF PENNSYLVANIA
REGISTERED PROFESSIONAL
CHRISTOPHER M. DEATS
ENGINEER
PE079050

FOR PROPERTY OWNER INFO SEE SHEET 5

FOR CURVE DATA SEE SHEETS 14-17

SURVEY BOOK NOS. 7127, 7128, 7152, 7153

3/29/2023
FILENAME: 63016_079-s-cv-gr-d25.dgn

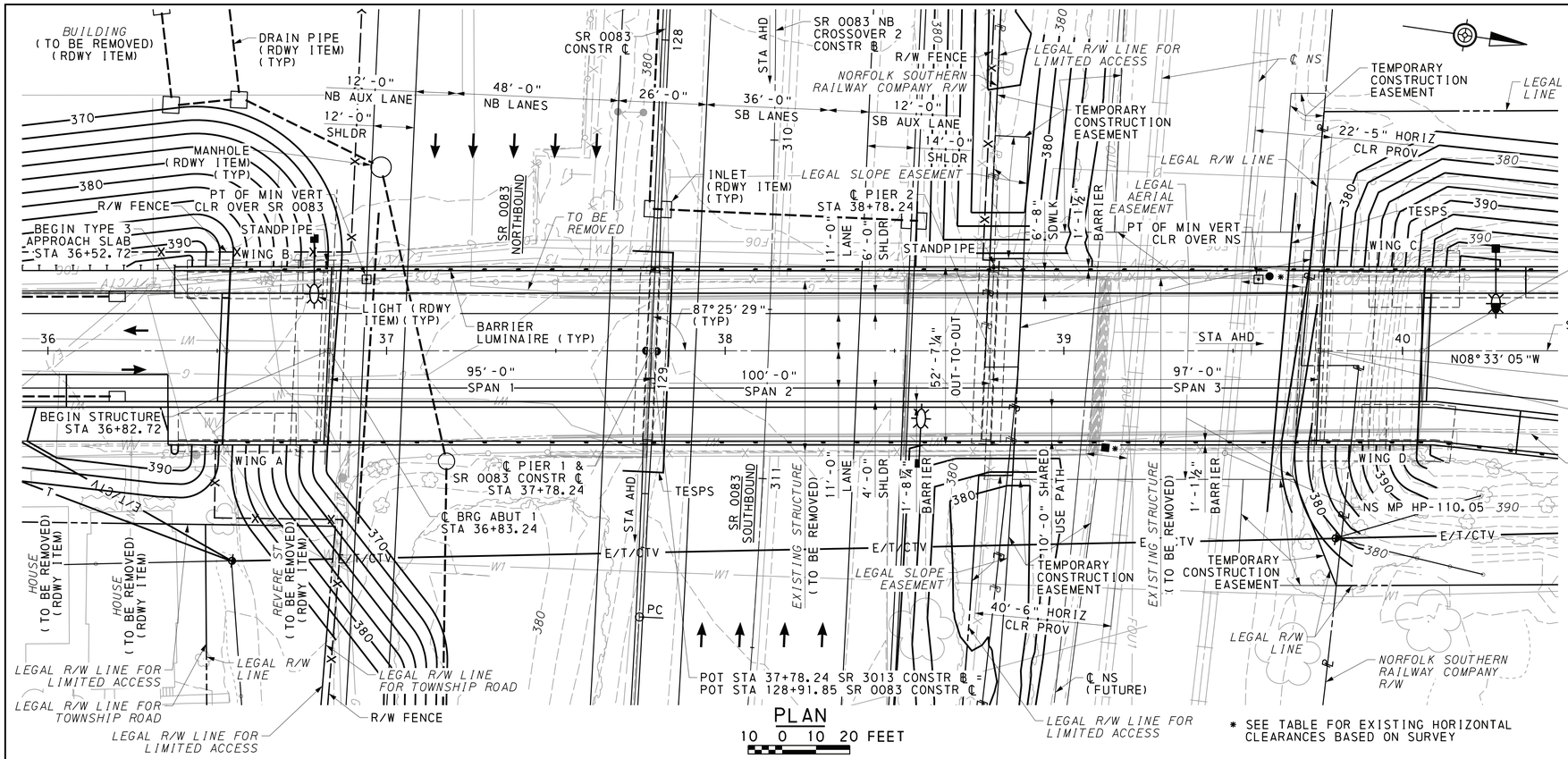

PLAN

10 0 10 20 FEET

LEGEND

→	DIRECTION OF TRAFFIC
200	PROPOSED CONTOUR
E/T/CTV	PROPOSED ELECTRIC, TELEPHONE, CABLE/TELEVISION
	TEMPORARY EXCAVATION SUPPORT & PROTECTION SYSTEM (TESPS)
200	EXISTING CONTOUR
	LEGAL RIGHT-OF-WAY
FO	EXISTING FIBER OPTIC
FOU	EXISTING FIBER OPTIC UNDERGROUND
E	EXISTING ELECTRIC
W	EXISTING WATER
T	EXISTING TELEPHONE
G	EXISTING GAS
CTV	EXISTING CABLE/TELEVISION
X	EXISTING FENCE
S	EXISTING SANITARY SEWER

HORIZONTAL ALIGNMENT DATA

SR 3013 (29TH STREET)

STA 29+91.55 — N08°33'05"W — STA 44+88.28

SR 0083

STA 92+39.82 — N84°01'26"E — STA 129+48.63

VERTICAL ALIGNMENT AND CURVE DATA

SR 3013 (29TH STREET)

STA 35+06.74, ELEV 385.18 — +5.70% — STA 37+98.41, ELEV 401.80

STA 39+98.41, ELEV 402.29 — -5.21% — STA 41+89.96, ELEV 392.31

SR 0083

PVI STA 128+35.30
ELEV 370.21
VC 272.00'
MO 0.68'

-2.50% — -0.50%

SR 3013 (29TH STREET)

PVI STA 33+86.74
ELEV 378.35
VC 240.00'
MO 1.52'

+0.62% — +5.70%

PVI STA 38+98.41
ELEV 407.50
VC 200.00'
MO -2.73'

+5.70% — -5.21%

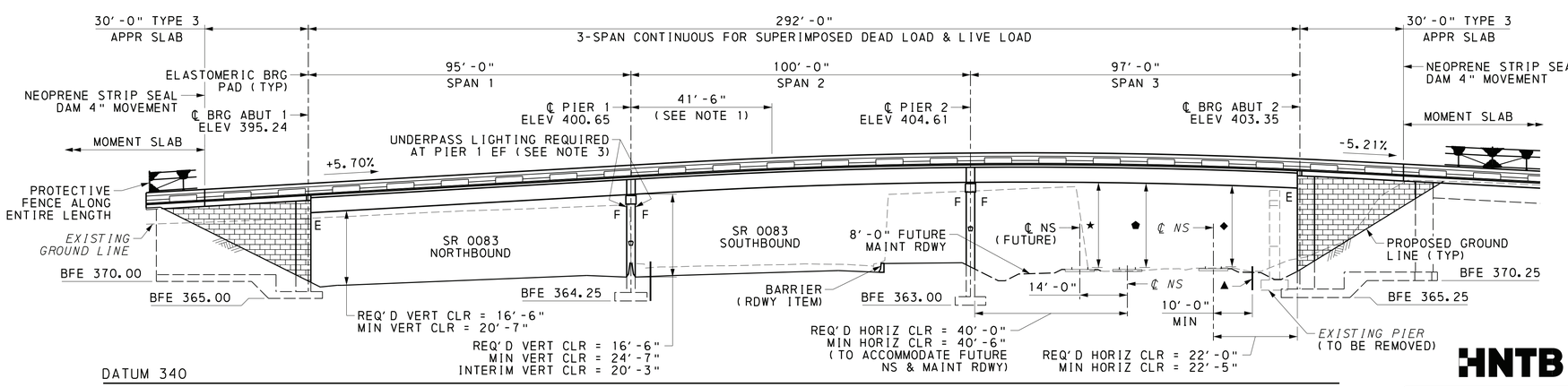

ELEVATION

10 0 10 20 FEET

▲ ALL SHORING WITHIN 14 FEET FROM THE TRACK CENTERLINE IS INTERLOCKING SHEETING

NOTES:

1. DISTANCE TO THEORETICAL THERMAL POINT OF FIXITY.
2. SR 0083 LANE CONFIGURATION SHOWN IS FOR FUTURE CONDITION. REFER TO SR 0083 SECTION 079 CONSTRUCTION PLANS FOR INTERIM LANE CONFIGURATION.
3. REFER TO HIGHWAY LIGHTING ALSO PLAN FOR UNDERPASS LIGHTING DETAILS ON EACH SIDE OF PIER 1.
4. FOR INDEX OF DRAWINGS, SEE SHEET 3.
5. FOR SUPPLEMENTAL DRAWINGS, SEE SHEET 4.
6. FOR DEMOLITION CONCEPT DETAILS, SEE SHEETS 7 - 9.

Mark	Description	By	Chk'd	Recm'd	Date
REVISIONS					

SR 3013 PREVIOUSLY KNOWN AS LR 22075
BMS STR ID: 22-3013-0020-0291 MPMS/ECMS PROJ: 97828 BRKEY: 67416

EXISTING HORIZONTAL CLEARANCES

SYMBOL	CLEARANCE	LOCATION
■	10'-11"	SOUTH ABUTMENT
●	17'-5"	PIER 1

CLEARANCE NOTE:
TEMPORARY CLEARANCES OF 22'-0" VERTICAL ABOVE TOP OF HIGHEST RAIL AND 14'-0" HORIZONTAL FROM CENTERLINE OF TRACK ARE TO BE MAINTAINED AT ALL TIMES DURING CONSTRUCTION EXCEPT FOR THE TEMPORARY SHORING AS INDICATED. EXISTING SUBSTANDARD CLEARANCES ARE NOT TO BE FURTHER REDUCED FOR THE TEMPORARY CONSTRUCTION CONDITION WITHOUT WRITTEN PERMISSION FROM NORFOLK SOUTHERN.

VERTICAL CLEARANCES

SYMBOL	EXISTING	PROPOSED**
◆	21'-11"	23'-3"
⬟	22'-2"	24'-8"
★	- - -	24'-11"***

** REQUIRED VERTICAL CLEARANCE = 23'-0"

*** VERTICAL CLEARANCE ASSUMES THE FUTURE TRACK ELEVATIONS ARE CONSISTENT WITH THE EXISTING ADJACENT TRACK TOP OF RAIL ELEVATIONS.

REFERENCES:	SHEETS:
MOMENT SLAB GENERAL PLANS	2
GENERAL NOTES	4 & 5
QUANTITIES	6
STAKE-OUT PLAN	13
STRUCTURE BORINGS	86 - 93

HNTB

COMMONWEALTH OF PENNSYLVANIA REGISTERED PROFESSIONAL JUSTIN ROBERT MCCARTHY ENGINEER PE076998

Justin R. McCarthy
REG PROF ENGINEER
DATE 6/24/2022

PREPARED BY:
HNTB CORPORATION
4507 NORTH FRONT STREET
SUITE 300
HARRISBURG, PA 17110

COMMONWEALTH OF PENNSYLVANIA
DEPARTMENT OF TRANSPORTATION

DAUPHIN COUNTY
SR 0083 SECTION 079

SEG 0020 OFFSET 0291
SR 3013 (29TH STREET) STA 37+78.24 OVER
SR 0083 & NORFOLK SOUTHERN RAILWAY COMPANY

3-SPAN CONTINUOUS COMPOSITE PS CONCRETE
PA BULB-TEE BEAM BRIDGE

GENERAL PLAN & ELEVATION

RECOMMENDED 12-6-2022
Derek Mitch
DISTRICT 8-0 BRIDGE ENGINEER

SHEET 1 OF 93
+ SUPPLEMENTAL DRAWINGS

S-39451

DES: MCA	DES CKD: JRM	DWG: SMZ	DWG CKD: JRM

6/23/2022
FILENAME: 63016-s-brB1-gpe01.dgn

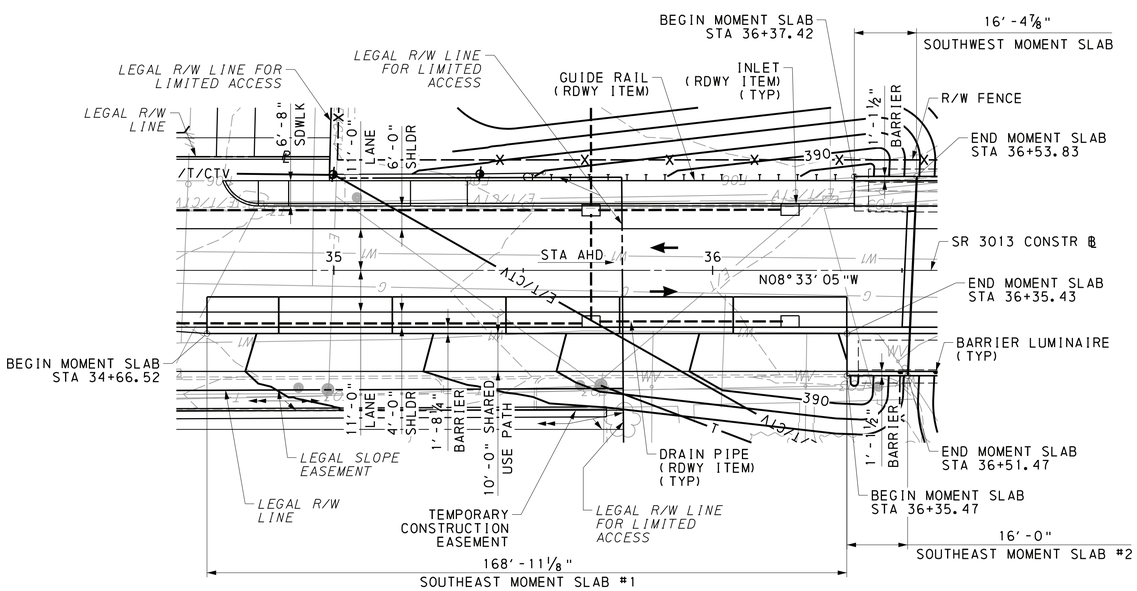

NEAR MOMENT SLABS

10 0 10 20 FEET

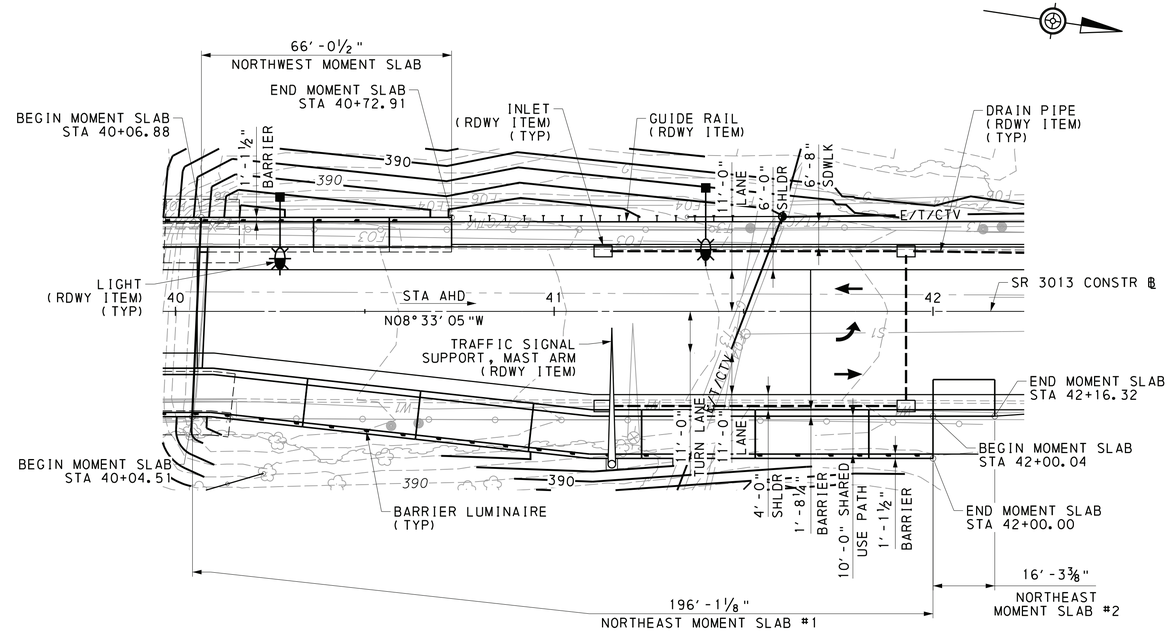

FAR MOMENT SLABS

10 0 10 20 FEET

LEGEND

→	DIRECTION OF TRAFFIC
200	PROPOSED CONTOUR
W	PROPOSED WATER
E/T/CTV	PROPOSED ELECTRIC, TELEPHONE, CABLE/TELEVISION
200	*EXISTING CONTOUR*
	LEGAL RIGHT-OF-WAY
FO	*EXISTING FIBER OPTIC*
FOU	*EXISTING FIBER OPTIC UNDERGROUND*
E	*EXISTING ELECTRIC*
W	*EXISTING WATER*
T	*EXISTING TELEPHONE*
G	*EXISTING GAS*
CTV	*EXISTING CABLE/TELEVISION*
X	*EXISTING FENCE*
S	*EXISTING SANITARY SEWER*

LEGEND OF ABBREVIATIONS:

ABUT	=	ABUTMENT
ADT	=	AVERAGE DAILY TRAFFIC
ADTT	=	AVERAGE DAILY TRUCK TRAFFIC
ALT	=	ALTERNATE
APPR	=	APPROACH
APPROX	=	APPROXIMATE
AHD	=	AHEAD
AUX	=	AUXILIARY
℄	=	BASELINE
BRG	=	BEARING
BOT	=	BOTTOM
BFE	=	BOTTOM OF FOOTING ELEVATION
℄	=	CENTERLINE
CG	=	CENTER OF GRAVITY
CHK'D/CKD	=	CHECKED
CLR	=	CLEAR
CONSTR	=	CONSTRUCTION
DES	=	DESIGN
Ø/DIA	=	DIAMETER
DWG	=	DRAWING
EA	=	EACH
EF	=	EACH FACE
ELEV	=	ELEVATION
EQ	=	EQUAL
EXIST	=	EXISTING
E/EXP	=	EXPANSION
FF	=	FRONT FACE
F	=	FIXED
GALV	=	GALVANIZED
H/HORIZ	=	HORIZONTAL
INV	=	INVERT
JT	=	JOINT
LT	=	LEFT
MAINT	=	MAINTENANCE
MAX	=	MAXIMUM
MP	=	MILEPOST
MIN	=	MINIMUM
NB	=	NORTHBOUND
NE	=	NORTHEAST
NW	=	NORTHWEST

LEGEND OF ABBREVIATIONS (CONTINUED):

NS	=	NORFOLK SOUTHERN RAILWAY
NO.	=	NUMBER
OD	=	OUTSIDE DIAMETER
PED	=	PEDESTAL
ℙ	=	PLATE
POB	=	POINT OF BEGINNING
POE	=	POINT OF ENDING
POT	=	POINT OF TANGENCY
PCP	=	PREFORMED CELLULAR POLYSTYRENE
P/S	=	PRESTRESSED
PG/PGL	=	PROFILE GRADE LINE
PROV	=	PROVIDED
PUB	=	PUBLICATION
R	=	RADIUS
R/W	=	RIGHT-OF-WAY
RDWY	=	ROADWAY
RECM'D	=	RECOMMENDED
REINF	=	REINFORCEMENT
REQ'D	=	REQUIRED
RF	=	REAR FACE
RT	=	RIGHT
SCHED	=	SCHEDULE
SHLDR	=	SHOULDER
SB	=	SOUTHBOUND
SE	=	SOUTHEAST
SW	=	SOUTHWEST
SPA	=	SPACE
STD	=	STANDARD
SR	=	STATE ROUTE
STA	=	STATION
ST	=	STREET
TEMP	=	TEMPORARY
TESPS	=	TEMPORARY EXCAVATION SUPPORT & PROTECTION SYSTEM
TYP	=	TYPICAL
V/VERT	=	VERTICAL
WING	=	WINGWALL
WP	=	WORK POINT

REFERENCES:	SHEETS:
GENERAL PLAN	1
GENERAL NOTES	4 & 5
QUANTITIES	6
STAKE-OUT PLAN	13

Mark	Description	By	Chk'd	Recm'd	Date

REVISIONS

SR 3013 PREVIOUSLY KNOWN AS LR 22075
BMS STR ID: 22-3013-0020-0291 MPMS/ECMS PROJ: 97828 BRKEY: 67416

HNTB

COMMONWEALTH OF PENNSYLVANIA
REGISTERED PROFESSIONAL
JUSTIN ROBERT MCCARTHY
ENGINEER
PE076998

COMMONWEALTH OF PENNSYLVANIA
DEPARTMENT OF TRANSPORTATION

DAUPHIN COUNTY
SR 0083 SECTION 079
SEG 0020 OFFSET 0291
SR 3013 (29TH STREET) STA 37+78.24 OVER
SR 0083 & NORFOLK SOUTHERN RAILWAY COMPANY
3-SPAN CONTINUOUS COMPOSITE PS CONCRETE
PA BULB-TEE BEAM BRIDGE
MOMENT SLAB GENERAL PLANS

PREPARED BY:
HNTB CORPORATION
4507 NORTH FRONT STREET
SUITE 300
HARRISBURG, PA 17110

RECOMMENDED 12-6-2022

SHEET 2 OF 93

S-39451

6/23/2022
FILENAME: 63016-s-br01-gpe02.dgn

DES: MCA | DES CKD: JDH | DWG: SMZ | DWG CKD: CEK

BRIDGE LOAD RATINGS WITHOUT FUTURE WEARING SURFACE

ADT: 5,828 (2050); ADTT: 182 (2050) (ONE DIRECTIONAL)

SPANS 1, 2 & 3		PA BULB-TEE BEAM, 33/53						
		H 20	HS 20	ML-80	TK527	PHL-93	P-82	P2016-13
INVENTORY RATING (IR)	DISTRIBUTION FACTOR	0.715	0.715	0.715	0.715	0.687	-	-
	LOCATION	0.50 L	0.50 L	0.50 L	0.50 L	0.50 L	-	-
	LIMIT STATE	SERV-IIIP	SERV-IIIP	SERV-IIIP	SERV-IIIP	SERV-III	-	-
	RATING FACTOR	1.72M	1.42M	1.26M	1.24M	1.18M	-	-
	RESISTANCE	0.300 KSI	0.300 KSI	0.300 KSI	0.300 KSI	0.300 KSI	-	-
	SPAN # / BEAM #	2 / 2	2 / 2	2 / 2	2 / 2	2 / 1	-	-
OPERATING RATING (OR)	DISTRIBUTION FACTOR	0.718	0.785	0.785	0.785	0.718	0.785	0.785
	LOCATION	0.00 L	0.26 L	0.26 L	0.26 L	0.00 L	0.16 L	0.16 L
	LIMIT STATE	STR-II	STR-II	STR-II	STR-II	STR-IA	STR-II	STR-II
	RATING FACTOR	2.89M	2.56V	2.35V	2.26V	1.69M	1.25V	1.16V
	RESISTANCE	-4,305 K-FT	274 KIPS	274 KIPS	274 KIPS	-4,305 K-FT	331 KIPS	331 KIPS
	SPAN # / BEAM #	3 / 2 & 6	3 / 2	3 / 2	3 / 2 & 6	3 / 2 & 6	3 / 2 & 6	3 / 2 & 6

CRITICAL MEMBER MAXIMUM FACTORED FLEXURAL RESISTANCE: 10,221.49 K-FT LOCATION: BEAM 1 (SPAN 2), 50'-0"

CRITICAL MEMBER MAXIMUM FACTORED SHEAR RESISTANCE: 627.36 K LOCATION: BEAM 2 (SPAN 3), 87'-3½"

BRIDGE LOAD RATINGS WITH FUTURE WEARING SURFACE

ADT: 5,828 (2050); ADTT: 182 (2050) (ONE DIRECTIONAL)

SPANS 1, 2 & 3		PA BULB-TEE BEAM, 33/53						
		H 20	HS 20	ML-80	TK527	PHL-93	P-82	P2016-13
INVENTORY RATING (IR)	DISTRIBUTION FACTOR	0.715	0.715	0.715	0.715	0.687	-	-
	LOCATION	0.50 L	0.50 L	0.50 L	0.50 L	0.50 L	-	-
	LIMIT STATE	SERV-IIIP	SERV-IIIP	SERV-IIIP	SERV-IIIP	SERV-III	-	-
	RATING FACTOR	1.48M	1.22M	1.09M	1.07M	1.03M	-	-
	RESISTANCE	0.300 KSI	0.300 KSI	0.300 KSI	0.300 KSI	0.300 KSI	-	-
	SPAN # / BEAM #	2 / 2	2 / 2	2 / 2	2 / 2	2 / 1	-	-
OPERATING RATING (OR)	DISTRIBUTION FACTOR	0.718	0.785	0.785	0.785	0.718	0.785	0.785
	LOCATION	0.00 L	0.26 L	0.26 L	0.26 L	0.00 L	0.16 L	0.16 L
	LIMIT STATE	STR-II	STR-II	STR-II	STR-II	STR-IA	STR-II	STR-II
	RATING FACTOR	2.66M	2.41V	2.21V	2.13V	1.56M	1.18V	1.09V
	RESISTANCE	-4,305 K-FT	269 KIP	269 KIP	269 KIP	-4,305 K-FT	327 KIP	327 KIP
	SPAN # / BEAM #	3 / 2 & 6	3 / 2 & 6	3 / 2 & 6	3 / 2 & 6	3 / 2 & 6	3 / 6	3 / 2 & 6

CRITICAL MEMBER MAXIMUM FACTORED FLEXURAL RESISTANCE: 10,221.49 K-FT LOCATION: BEAM 1 (SPAN 2), 50'-0"

CRITICAL MEMBER MAXIMUM FACTORED SHEAR RESISTANCE: 621.06 K LOCATION: BEAM 2 (SPAN 3), 87'-3½"

RATING NOTES:

1. RATINGS BASED ON LOAD AND RESISTANCE FACTOR DESIGN (LRFD) METHOD.
2. DISTRIBUTION FACTORS ARE CORRESPONDING TO THE CONTROLLING LIMIT STATES.
3. DATA TAKEN FROM PENNDOT'S P/S CONCRETE GIRDER DESIGN AND RATING (PSLRFD) PROGRAM (v2.14.0.0)
4. FACTORED RESISTANCE TAKEN AT THE LOCATION OF THE CRITICAL MEMBER INDICATED.
5. M - MOMENT RATING FACTOR CONTROLS
   V - SHEAR RATING FACTOR CONTROLS
6. RATINGS WITH FUTURE WEARING SURFACE INCLUDES SURFACE AREA DENSITY OF 30 LB/SF FOR FUTURE WEARING SURFACE.
7. PHL-93 = PENNSYLVANIA DESIGN VEHICULAR LIVE LOAD
   ML-80 = PENNSYLVANIA MAXIMUM LEGAL LOAD
   TK527 = PENNSYLVANIA LEGAL LOAD CONFIGURATION
   P-82 = PENNSYLVANIA PERMIT LOAD
   P2016-13 = PENNSYLVANIA PERMIT LOAD
8. FOR THE STR-IP LIMIT STATE, THE VEHICULAR LOAD DISTRIBUTION FACTOR ACCOUNTS FOR THE PRESENCE OF PEDESTRIAN LOADS.
9. FOR BEAM PROPERTIES USED FOR RATINGS, SEE SHEET 46.
10. ALL BEAMS DESIGNED AS SIMPLE SPAN FOR NON-COMPOSITE DEAD LOAD AND AS CONTINUOUS SPANS WITH SIMPLE SPAN CHECKS FOR COMPOSITE DEAD LOAD AND LIVE LOAD.

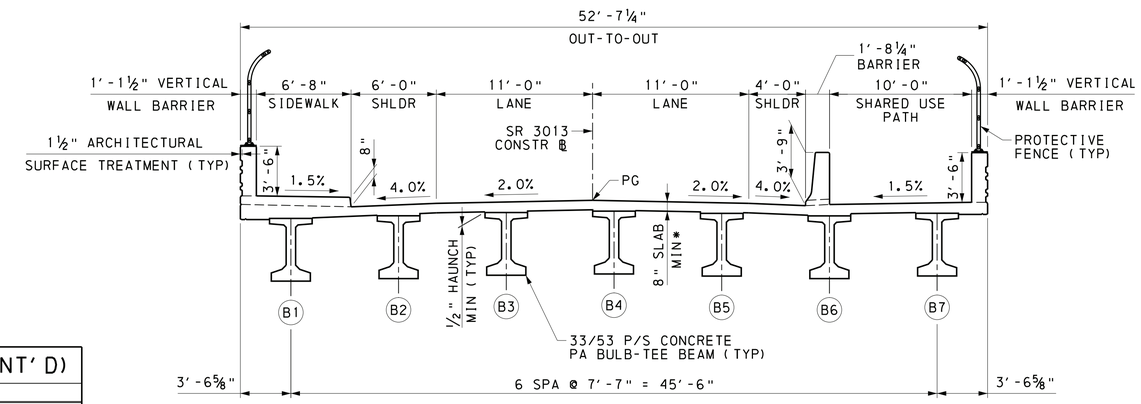

TYPICAL SECTION

2 0 2 4 6 FEET

* INCLUDES ½" INTEGRAL WEARING SURFACE

INDEX OF DRAWINGS

SHEET NO.	TITLE
1	GENERAL PLAN & ELEVATION
2	MOMENT SLAB GENERAL PLANS
3	TYPICAL SECTION & LOAD RATINGS
4	GENERAL NOTES 1
5	GENERAL NOTES 2
6	QUANTITIES
7	SUGGESTED DEMOLITION SEQUENCE 1
8	SUGGESTED DEMOLITION SEQUENCE 2
9	SUGGESTED DEMOLITION SEQUENCE 3
10	CONCEPTUAL ERECTION PLAN 1
11	CONCEPTUAL ERECTION PLAN 2
12	CONCEPTUAL ERECTION PLAN 3
13	STAKE-OUT PLAN
14	ABUTMENT 1 FOOTING PLAN
15	ABUTMENT 1 PLAN
16	ABUTMENT 1 ELEVATION
17	ABUTMENT 1 SECTION & DETAILS
18	WINGWALL A PLAN & ELEVATION
19	WINGWALL A SECTIONS
20	WINGWALL B PLAN & ELEVATION
21	WINGWALL B SECTIONS
22	ABUTMENT 1 REBAR SCHEDULE
23	ABUTMENT 2 FOOTING PLAN
24	ABUTMENT 2 PLAN
25	ABUTMENT 2 ELEVATION
26	ABUTMENT 2 SECTION & DETAILS
27	WINGWALL C PLAN & ELEVATION
28	WINGWALL C SECTIONS
29	WINGWALL D PLAN & ELEVATION
30	WINGWALL D SECTIONS
31	ABUTMENT 2 REBAR SCHEDULE
32	MISCELLANEOUS ABUTMENT DETAILS
33	ABUTMENT ARCHITECTURAL DETAILS
34	PIER 1 FOOTING PLAN
35	PIER 1 PLAN

INDEX OF DRAWINGS (CONT'D)

SHEET NO.	TITLE
36	PIER 1 ELEVATION & SECTION
37	PIER 1 DETAILS
38	PIER 2 FOOTING PLAN
39	PIER 2 PLAN
40	PIER 2 ELEVATION & SECTION
41	PIER 2 DETAILS
42	PIER 1 & 2 REBAR SCHEDULE
43	FRAMING PLAN
44	BEAM DETAILS 1
45	BEAM DETAILS 2
46	BEAM DETAILS 3
47	BEARING DETAILS
48	SLAB PLAN 1
49	SLAB PLAN 2
50	SLAB TYPICAL SECTION 1
51	SLAB TYPICAL SECTION 2
52	BARRIER & SIDEWALK DETAILS 1
53	BARRIER & SIDEWALK DETAILS 2
54	DIAPHRAGM DETAILS 1
55	DIAPHRAGM DETAILS 2
56	DIAPHRAGM DETAILS 3
57	SUPERSTRUCTURE REBAR SCHEDULE
58	DECK ELEVATIONS
59	SLEEPER SLAB PLANS
60	NEAR APPROACH SLAB PLAN
61	FAR APPROACH SLAB PLAN
62	APPROACH SLAB SECTIONS
63	APPROACH SLAB DETAILS 1
64	APPROACH SLAB DETAILS 2
65	APPROACH SLAB DETAILS 3
66	APPROACH SLAB REBAR SCHEDULE
67	MOMENT SLAB DETAILS 1
68	MOMENT SLAB DETAILS 2
69	MOMENT SLAB DETAILS 3
70	MOMENT SLAB DETAILS 4

INDEX OF DRAWINGS (CONT'D)

SHEET NO.	TITLE
71	MOMENT SLAB DETAILS 5
72	MOMENT SLAB DETAILS 6
73	MOMENT SLAB DETAILS 7
74	MOMENT SLAB DETAILS 8
75	MOMENT SLAB DETAILS 9
76	MOMENT SLAB DETAILS 10
77	MOMENT SLAB DETAILS 11
78	MOMENT SLAB DETAILS 12
79	NEAR MOMENT SLABS REBAR SCHEDULE
80	FAR MOMENT SLABS REBAR SCHEDULE
81	BARRIER ARCHITECTURAL DETAILS 1
82	BARRIER ARCHITECTURAL DETAILS 2
83	PROTECTIVE FENCE DETAILS
84	FUTURE REDECKING PLAN
85	STANDPIPE DETAILS
86-93	STRUCTURE BORINGS

REFERENCES:	SHEETS:
GENERAL PLAN	1
GENERAL NOTES	4 & 5

Mark	Description	By	Chk'd	Recm'd	Date
REVISIONS					

SR 3013 PREVIOUSLY KNOWN AS LR 22075

BMS STR ID: 22-3013-0020-0291 MPMS/ECMS PROJ: 97828 BRKEY: 67416

HNTB

COMMONWEALTH OF PENNSYLVANIA
REGISTERED PROFESSIONAL
JUSTIN ROBERT MCCARTHY
ENGINEER
PE076998

PREPARED BY:

HNTB CORPORATION
4507 NORTH FRONT STREET
SUITE 300
HARRISBURG, PA 17110

COMMONWEALTH OF PENNSYLVANIA
DEPARTMENT OF TRANSPORTATION

DAUPHIN COUNTY
SR 0083 SECTION 079
SEG 0020 OFFSET 0291
SR 3013 (29TH STREET) STA 37+78.24 OVER
SR 0083 & NORFOLK SOUTHERN RAILWAY COMPANY

3-SPAN CONTINUOUS COMPOSITE PS CONCRETE
PA BULB-TEE BEAM BRIDGE

TYPICAL SECTION & LOAD RATINGS

RECOMMENDED 12-6-2022

SHEET 3 OF 93

S-39451

6/23/2022
FILENAME: 63016-s-brB1-typ01.dgn

DES: MCA | DES CKD: JMA | DWG: SMZ | DWG CKD: JRM

GENERAL NOTES

DESIGN SPECIFICATIONS:

1. AASHTO LRFD BRIDGE DESIGN SPECIFICATIONS, 8TH EDITION, 2017, AND AS SUPPLEMENTED BY DESIGN MANUAL, PART 4, DECEMBER 2019.
2. LIVE LOAD DISTRIBUTION TO GIRDERS IS BASED UPON DM-4 DISTRIBUTION FACTORS.
3. DESIGN IS IN ACCORDANCE WITH THE LRFD METHOD.

DESIGN LIVE LOADS:

1. PHL-93, P-82 AND P2016-13
2. FATIGUE DESIGN IS BASED ON THE FOLLOWING:

   PRESTRESSED CONCRETE: ADTT 182 (2050)(ONE-DIRECTIONAL)
3. MAXIMUM ALLOWABLE TENSILE STRESS IN PRECOMPRESSED TENSILE ZONE: $0.0948\sqrt{(f'c)}$

DEAD LOADS:

1. INCLUDES SURFACE AREA DENSITY OF 0.030 KSF FOR FUTURE WEARING SURFACE ON THE DECK SLAB.
2. INCLUDES A SURFACE AREA DENSITY OF 0.015 KSF FOR PERMANENT METAL DECK FORMS THAT TAKES INTO ACCOUNT THE WEIGHT OF THE FORM, PLUS THE WEIGHT OF THE CONCRETE IN THE VALLEYS OF THE FORMS.

GENERAL:

1. PROVIDE MATERIALS AND PERFORM WORK IN ACCORDANCE WITH SPECIFICATIONS, PUBLICATION 408/2020, AASHTO/AWS D1.5M/D1.5: 2015 BRIDGE WELDING CODE, AND CONTRACT SPECIAL PROVISIONS.
2. PROVIDE 2" CONCRETE COVER ON REINFORCEMENT BARS, EXCEPT AS NOTED.
3. USE CLASS AAAP CEMENT CONCRETE IN DECK SLAB AND TYPE 3 APPROACH SLABS.

   USE CLASS AA CEMENT CONCRETE IN ALTERNATE SIDEWALK, BARRIERS, CONCRETE DIAPHRAGMS, ABUTMENT BACKWALLS, CHEEK WALLS, SHEAR BLOCKS, U-WINGS ABOVE BRIDGE SEAT CONSTRUCTION JOINT, SLEEPER SLABS, MOMENT SLABS, AND MOMENT SLAB TOE WALLS.

   USE CLASS A CEMENT CONCRETE IN PIERS, ABUTMENTS BELOW BRIDGE SEAT, WINGWALLS, AND FOOTINGS.
4. A HIGHER CLASS CONCRETE MAY BE SUBSTITUTED FOR A LOWER CLASS CONCRETE AT NO ADDITIONAL COST TO THE DEPARTMENT, IF APPROVED BY THE DISTRICT BRIDGE ENGINEER.
5. PROVIDE GRADE 60 REINFORCING STEEL BARS THAT MEET THE REQUIREMENTS OF ASTM A 615/A 615M, A 996/A 996M OR A 706/A 706M. DO NOT WELD GRADE 60 REINFORCING STEEL BARS UNLESS SPECIFIED. GRADE 40 REINFORCING STEEL BARS MAY BE SUBSTITUTED WITH A PROPORTIONAL INCREASE IN CROSS-SECTIONAL AREA, IF APPROVED BY THE CHIEF BRIDGE ENGINEER. DO NOT USE RAIL STEEL A 996/A 996M REINFORCEMENT BARS IN BRIDGE PIERS, ABUTMENTS, SHEAR BLOCKS, BEAMS, FOOTINGS, PILES, BARRIERS OR WHERE BENDING OR WELDING OF THE REINFORCEMENT BARS IS INDICATED.
6. USE EPOXY-COATED REINFORCEMENT BARS EVERYWHERE.
7. GALVANIZED REINFORCING STEEL BARS MAY BE SUBSTITUTED FOR EPOXY-COATED REINFORCING STEEL BARS AT NO ADDITIONAL COST TO THE DEPARTMENT.
8. RAKE-FINISH ALL HORIZONTAL CONSTRUCTION JOINTS, EXCEPT AS INDICATED.
9. CONSTRUCT DECK SLAB TRANSVERSE CONSTRUCTION JOINTS PARALLEL TO BRIDGE CENTERLINE OF BEARINGS.
10. PLACE CHEEKWALL, CONCRETE SHEAR BLOCKS, AND BACKWALL CONCRETE AFTER BEAMS ARE SET IN POSITION.
11. CHAMFER EXPOSED CONCRETE EDGES ¾" BY ¾", EXCEPT AS NOTED.
12. ALL DIMENSIONS SHOWN ARE HORIZONTAL, EXCEPT AS NOTED.
13. USE PERMANENT METAL FORMS TO CONSTRUCT THE DECK SLAB.
14. DECK SLAB THICKNESS INCLUDES A ½" INTEGRAL WEARING SURFACE.
15. SUPERSTRUCTURE DIMENSIONS SHOWN ARE FOR A NORMAL TEMPERATURE OF 68°F.
16. PROVIDE MINIMUM EMBEDMENT AND SPLICE LENGTHS IN ACCORDANCE WITH STANDARD DRAWING BC-736M, UNLESS OTHERWISE INDICATED.
17. PREPARE BEARING AREAS AS SPECIFIED IN PUBLICATION 408, SECTION 1001.3(k)9.
18. BRIDGE IS NOT WEIGHT RESTRICTED. SEE PUBLICATION 408 SECTION 105.17 FOR CONSTRUCTION LOADING LIMITS.
19. PROVIDE A MINIMUM WIDTH OF 2½" AT 68°F FOR STRIP SEAL INSTALLATIONS UNLESS OTHERWISE INDICATED.
20. DO NOT USE ADHESIVE ANCHORS IN A TENSION APPLICATION FOR PERMANENT INSTALLATIONS.
21. DO NOT USE ADHESIVE ANCHORS IN A SUSTAINED TENSION APPLICATION FOR TEMPORARY INSTALLATIONS, INCLUDING DURING CONSTRUCTION.
22. LABORATORY ANALYSIS OF SAMPLES FROM ELEMENTS OF THE ROADWAY SIGN ATTACHED TO THE WEST PARAPET OF THE EXISTING STRUCTURE (S-2387) INDICATED THE PRESENCE OF LEAD-BASED PAINT. PRESUMED ASBESTOS CONTAINING MATERIAL WAS OBSERVED AT CAULKING MATERIAL AND AT UTILITIES ATTACHED TO THE EXISTING STRUCTURE (S-9870). REFER TO THE ASBESTOS CONTAINING MATERIAL AND LEAD-BASED PAINT INSPECTION REPORT AND SPECIAL PROVISION.

EXISTING STRUCTURE PLANS:

1. DO NOT CONSIDER ANY OF THE DATA ON THE EXISTING STRUCTURES SUPPLIED IN THE ORIGINAL DESIGN DRAWINGS OR MADE AVAILABLE TO YOU BY THE DEPARTMENT OR ITS AUTHORIZED AGENTS AS POSITIVE REPRESENTATIONS OF ANY OF THE CONDITIONS THAT YOU WILL ENCOUNTER IN THE FIELD.
2. THE INFORMATION SHOWN ON THE PLANS FOR THE EXISTING BRIDGES ARE NOT PART OF THE PLANS, PROPOSAL OR CONTRACT AND IS NOT TO BE CONSIDERED A BASIS FOR COMPUTATION OF THE UNIT PRICES USED FOR BIDDING PURPOSES. THERE IS NO EXPRESSED OR IMPLIED AGREEMENT THAT INFORMATION IS CORRECTLY SHOWN. THE BIDDER IS NOT TO RELY ON THIS INFORMATION, BUT IS TO ASSUME THE POSSIBILITY THAT CONDITIONS AFFECTING THE COST AND/OR QUANTITIES OF WORK TO BE PERFORMED MAY DIFFER FROM THOSE INDICATED. SEE S-2387 (MARCH 17, 1959) AND S-9870 (AUGUST 27, 1970) PLAN SHEETS FOR EXISTING STRUCTURE INFORMATION.
3. REMOVE EXISTING BRIDGES IN ACCORDANCE WITH THE TRAFFIC CONTROL PLANS AND SPECIAL PROVISIONS.

UTILITY NOTES:

1. COORDINATE, LOCATE, AND CONDUCT ALL WORK RELATED TO PUBLIC AND PRIVATE UTILITIES IN ACCORDANCE WITH PUBLICATION 408, SECTIONS 105.06 AND 107.12.

FOUNDATION NOTES:

1. FOUNDATIONS MAY BE ORDERED BY THE REPRESENTATIVE AND DISTRICT GEOTECHNICAL SPECIALIST TO BE AT ANY ELEVATION OR OF ANY DIMENSIONS NECESSARY TO PROVIDE A PROPER FOUNDATION.
2. THE CONTRACTOR IS RESPONSIBLE FOR THE CONTROL OF DRAINAGE DURING CONSTRUCTION. DIRECT RUNOFF AWAY FROM THE PROPOSED FOUNDATION FOOTPRINT.
3. CONSIDER THE SOIL ENVIRONMENT AS POTENTIALLY CORROSIVE, EPOXY COAT ALL REINFORCEMENT BARS.
4. PRIOR TO FOOTING CONSTRUCTION, ALLOW THE DISTRICT GEOTECHNICAL SPECIALIST TO INSPECT THE BOTTOM OF FOOTING EXCAVATION. AS DIRECTED, EXCAVATE SOFT OR UNSUITABLE MATERIAL BELOW THE BOTTOM OF FOOTING ELEVATION AND REPLACE WITH STRUCTURAL FILL.
5. AT ABUTMENT 1 AND ASSOCIATED WINGWALLS, OVER-EXCAVATE TO TOP OF ROCK AND BACKFILL TO THE BOTTOM OF FOOTING ELEVATION WITH STRUCTURAL FILL IN ACCORDANCE WITH OVEREXCAVATION AND BACKFILL WITH STRUCTURAL FILL SPECIAL PROVISION.
6. AT PIER 1 AND PIER 2, IF BEDROCK IS NOT ENCOUNTERED AT THE BOTTOM OF FOOTING ELEVATION, OVER-EXCAVATE TO TOP OF ROCK AND BACKFILL WITH CLASS C CEMENT CONCRETE TO THE BOTTOM OF FOOTING ELEVATION IN ACCORDANCE WITH OVEREXCAVATION AND BACKFILL WITH CLASS C CEMENT CONCRETE SPECIAL PROVISION.
7. AT ABUTMENT 2 AND ASSOCIATED WINGWALLS, OVER-EXCAVATE TWO FEET AND PERFORM SPECIAL ROLLING WITHIN THE FOUNDATION FOOTPRINT PER PUBLICATION 408, SECTION 208. WHERE UNSUITABLE AND/OR UNSTABLE MATERIALS ARE IDENTIFIED, PERFORM ADDITIONAL OVER-EXCAVATION TO COMPETENT MATERIAL AND BACKFILL TO THE BOTTOM OF FOOTING ELEVATION WITH STRUCTURAL FILL IN ACCORDANCE WITH OVEREXCAVATION AND BACKFILL WITH STRUCTURAL FILL SPECIAL PROVISION.
8. EXCAVATE ACCORDING TO CURRENT OSHA OR OTHER APPLICABLE LOCAL, STATE, AND FEDERAL REGULATIONS. IT IS THE CONTRACTOR'S RESPONSIBILITY TO ENSURE STABILITY OF THE EXCAVATIONS.
9. SITE CLASS IS NOT CLASS E OR F.

ARCHITECTURAL DETAIL NOTES:

1. PROVIDE FORMWORK TO CREATE THE RELIEF DETAILS ON THE OUTSIDE FACES OF BARRIERS AS INDICATED ON SHEETS 81 AND 82. THIS FORMWORK IS INCIDENTAL TO THE BARRIER CONCRETE.
2. PROVIDE FORMWORK TO CREATE AN EMBEDDED KEYSTONE PATTERN ON THE ENDS OF THE PIERS AS INDICATED ON SHEET 37. THIS FORMWORK IS INCIDENTAL TO THE PIER CONCRETE.
3. APPLY AN ARCHITECTURAL SURFACE TREATMENT (FORMLINER) TO THE FRONT FACE OF ABUTMENTS, EXPOSED FACES OF WINGWALLS, AND FRONT FACES OF CHEEKWALLS AT THE ABUTMENTS AS INDICATED ON SHEET 33 AND IN ACCORDANCE WITH SPECIAL PROVISION - ARCHITECTURAL SURFACE TREATMENT, ½" RELIEF, SPLIT BLOCK, 14"x22".
4. APPLY STAIN TO CONCRETE SURFACES TO THE LIMITS INDICATED AND IN ACCORDANCE WITH SPECIAL PROVISION - STAINING OF REINFORCED CONCRETE SURFACES. USE THE FOLLOWING COLORS:

   AREAS OF ARCHITECTURAL SURFACE TREATMENT, SPLIT BLOCK, 14"x22"

   BASE COLOR OF ENTIRE SURFACE AREA:
   FEDERAL COLOR #30372, BEIGE-SAND

   ACCENT BLOCK COLORS (THE NUMBER OF BLOCKS TO HAVE THE TWO ACCENT COLORS SHOULD EACH BE 4% OF THE TOTAL BLOCK SURFACE AREA, EACH ACCENT BLOCK SHOULD BE COMPLETELY COLORED):
   FEDERAL COLOR #30219, COCOA-TAN
   FEDERAL COLOR #30166, REDDISH-BROWN

   GROUT LINES:
   FEDERAL COLOR #26492, OFF-WHITE

   OTHER CONCRETE SURFACES

   BARRIER RECTANGULAR BLOCKS:
   FEDERAL COLOR #24272, GREEN

   KEYSTONE AT PIER ENDS:
   FEDERAL COLOR #24272, GREEN
5. BRIDGE BARRIER, SIDEWALK, BEAMS, AND PIERS TO BE NATURAL COLOR, EXCEPT FOR AREAS INDICATED ABOVE.
6. PROVIDE A MODIFIED PROTECTIVE FENCE AS INDICATED ON SHEET 83 AND IN ACCORDANCE WITH SPECIAL PROVISION - RAILROAD PROTECTIVE FENCE, CURVED TOP, VINYL-COATED STEEL, BLACK.
   FEDERAL COLOR #37031, BLACK

* AS SUPPLEMENTED BY ATTACHMENT BC-788 MODIFIED "SPRAY-ON WATERPROOFING DETAILS"

DESCRIPTION	DWG. NO.	REC. DATE
CLASSIFICATION OF EARTHWORK FOR STRUCTURES	RC-11M	06/01/10
BACKFILL AT STRUCTURES	RC-12M	02/08/19
CONCRETE PAVEMENT JOINTS	RC-20M	11/30/21
GUIDE RAIL TO BRIDGE BARRIER TRANSITIONS	RC-50M	02/19/21
PROTECTIVE FENCE	BC-701M	02/19/21
ELECTRICAL DETAILS	BC-721M	02/19/21
PERMANENT METAL DECK FORMS	BC-732M	01/31/19
ANCHOR SYSTEMS	BC-734M	02/19/21
WALL CONSTRUCTION AND EXPANSION JOINT DETAILS	BC-735M	09/30/16
REINFORCEMENT BAR FABRICATION DETAILS	BC-736M	01/31/19
BRIDGE DRAINAGE	BC-751M	01/31/19
CONCRETE DECK SLAB DETAILS	BC-752M	02/19/21
BEARINGS	BC-755M	01/31/19
PREFORMED NEOPRENE COMPRESSION SEAL JOINT FOR APPROACH SLABS	BC-766M	01/31/19
NEOPRENE STRIP SEAL DAM FOR PRESTRESSED CONCRETE & STEEL I-BEAM BRIDGES	BC-767M	02/19/21
PRESTRESSED CONCRETE BEAM BRACING	BC-772M	09/30/16
MISCELLANEOUS PRESTRESS DETAILS	BC-775M	09/30/16
TYPICAL WATERPROOFING AND EXPANSION DETAILS *	BC-788M	01/31/19

SUPPLEMENTAL DRAWINGS

Mark	Description	By	Chk'd	Recm'd	Date

REVISIONS

SR 3013 PREVIOUSLY KNOWN AS LR 22075
BMS STR ID: 22-3013-0020-0291 MPMS/ECMS PROJ: 97828 BRKEY: 67416

HNTB

COMMONWEALTH OF PENNSYLVANIA
REGISTERED PROFESSIONAL
JUSTIN ROBERT MCCARTHY
ENGINEER
PE076998

PREPARED BY:
HNTB CORPORATION
4507 NORTH FRONT STREET
SUITE 300
HARRISBURG, PA 17110

COMMONWEALTH OF PENNSYLVANIA
DEPARTMENT OF TRANSPORTATION

DAUPHIN COUNTY
SR 0083 SECTION 079
SEG 0020 OFFSET 0291
SR 3013 (29TH STREET) STA 37+78.24 OVER
SR 0083 & NORFOLK SOUTHERN RAILWAY COMPANY

3-SPAN CONTINUOUS COMPOSITE PS CONCRETE
PA BULB-TEE BEAM BRIDGE
GENERAL NOTES 1

RECOMMENDED 12-6-2022

SHEET 4 OF 93

S-39451

12/2/2022
FILENAME: 63016-s-br01-gen01.dgn

DES: SMZ | DES CKD: JRM | DWG: SMZ | DWG CKD: JRM

GENERAL NOTES

RAILROAD NOTES:

1. ALL WORK TO BE PERFORMED ON, OVER, UNDER, OR ADJACENT TO THE RAILROAD RIGHT-OF-WAY SHALL COMPLY WITH THE NORFOLK SOUTHERN RAILWAY COMPANY ("RAILROAD", "NSR" OR "NS") PUBLIC PROJECTS MANUAL (APPENDIX E, SPECIAL PROVISIONS FOR PROTECTION OF RAILWAY INTERESTS, AND APPENDIX H1, OVERHEAD GRADE SEPARATION DESIGN CRITERIA). WHEN IN CONFLICT WITH OTHER PROJECT SPECIFICATIONS, THE MOST STRINGENT ONE SHALL APPLY.

2. "ONE CALL" SERVICES DO NOT LOCATE BURIED RAILROAD SIGNAL AND COMMUNICATIONS LINES. THE CONTRACTOR SHALL CONTACT THE RAILROAD'S REPRESENTATIVE 2 DAYS IN ADVANCE OF WORK AT THOSE PLACES WHERE EXCAVATION, PILE DRIVING, OR HEAVY LOADS MAY DAMAGE THE RAILROAD'S UNDERGROUND FACILITIES. UPON REQUEST FROM THE CONTRACTOR OR SPONSOR, RAILROAD FORCES WILL LOCATE AND PAINT MARK OR FLAG THE RAILROAD'S UNDERGROUND FACILITIES. THE CONTRACTOR SHALL AVOID EXCAVATION OR OTHER DISTURBANCE OF THESE FACILITIES. IF DISTURBANCE OR EXCAVATION IS REQUIRED NEAR A BURIED RAILROAD FACILITY, THE CONTRACTOR SHALL COORDINATE WITH THE RAILROAD TO HAVE THE FACILITY POTHOLED MANUALLY WITH CAREFUL HAND EXCAVATION. THE FACILITY SHALL BE PROTECTED BY THE CONTRACTOR DURING THE COURSE OF THE DISTURBANCE UNDER THE SUPERVISION AND DIRECTION OF THE RAILROAD'S REPRESENTATIVE. (SEE NS PUBLIC PROJECTS MANUAL, APPENDIX E, SECTION 3.D).

3. ALL UTILITY INSTALLATIONS OR RELOCATIONS THAT ARE REQUIRED IN CONJUNCTION WITH THIS PROJECT CAN BE INSTALLED OR RELOCATED AS PART OF THE PROJECT PROVIDED THE CONSTRUCTION IS PERFORMED BY THE PROJECT CONTRACTOR OR PROJECT CONTRACTOR'S SUB-CONTRACTOR. HOWEVER, THE UTILITY MUST SUBMIT AN APPLICATION FOR THE INSTALLATION OR RELOCATION TO AECOM FOR APPROPRIATE HANDLING FOR LICENSE AGREEMENT AND APPLICABLE FEES. FOR UTILITY APPLICATIONS GO TO: WWW.NSCORP.COM > REAL ESTATE > NS SERVICES > WIRE, PIPELINE, & FIBER OPTIC PROJECTS > AECOM. NOTE: LICENSE AGREEMENT MUST BE EXECUTED PRIOR TO UTILITY BEING INSTALLED OR RELOCATED.

4. THE CONTRACTOR SHALL NOT COMMENCE ANY WORK ON RAILROAD RIGHTS-OF-WAY UNTIL THEY HAVE COMPLIED WITH THE CONDITIONS PRESENTED IN NS PUBLIC PROJECTS MANUAL (SEE APPENDIX E, NORFOLK SOUTHERN - SPECIAL PROVISIONS FOR PROTECTION OF RAILWAY INTERESTS).

5. THE CONTRACTOR SHALL SO ARRANGE AND CONDUCT THEIR WORK SUCH THAT THERE WILL BE NO INTERFERENCE WITH THE RAILROAD'S OPERATIONS. WHENEVER WORK IS LIABLE TO AFFECT THE OPERATIONS OR SAFETY OF TRAINS, THE METHODS OF DOING SUCH WORK SHALL FIRST BE SUBMITTED TO THE RAILROAD ENGINEER FOR APPROVAL, BUT SUCH APPROVAL SHALL NOT RELIEVE THE CONTRACTOR FROM ANY LIABILITY.

6. MATERIALS AND EQUIPMENT SHALL NOT BE STORED WHERE THEY WILL INTERFERE WITH RAILROAD OPERATIONS, NOR ON THE RIGHTS-OF-WAY OF THE RAILROAD WITHOUT FIRST HAVING OBTAINED PERMISSION FROM THE RAILROAD ENGINEER, AND SUCH PERMISSION WILL BE WITH THE UNDERSTANDING THAT THE RAILROAD WILL NOT BE LIABLE FOR DAMAGE TO SUCH MATERIAL AND EQUIPMENT FROM ANY CAUSE AND THAT THE RAILROAD ENGINEER MAY MOVE OR REQUIRE THE CONTRACTOR TO MOVE, AT THE CONTRACTOR'S EXPENSE, SUCH MATERIAL AND EQUIPMENT. (SEE NS PUBLIC PROJECTS MANUAL, APPENDIX E, SECTION 5K).

7. SUPPORT OF EXCAVATION AND EXISTING SUBSTRUCTURE TO REMAIN ARE TO BE CUT OFF AT LEAST 2 FEET BELOW PROPOSED GRADE. (SEE NS PUBLIC PROJECTS MANUAL, APPENDIX E5, SECTION D7, AND APPENDIX H1, SECTION 5H).

8. PROVIDE NO. 3 COARSE AGGREGATE FOR THE TOP 2 FEET OF ANY BACKFILL WITHIN 20 FEET OF CENTERLINE OF EXISTING TRACK.

9. THE RAILROAD WILL BE PROVIDED AS-BUILT DRAWINGS SHOWING THE ACTUAL CLEARANCES AS CONSTRUCTED. DEPTH, SIZE, AND LOCATION OF ALL FOUNDATION COMPONENTS SHALL BE SHOWN ON THE DRAWINGS. (SEE NS PUBLIC PROJECTS MANUAL, APPENDIX H1, SECTION 8A).

10. FOR PROJECTS REQUIRING MORE THAN 30 CONSECUTIVE DAYS OF FLAGGING, THE CONTRACTOR SHALL PROVIDE THE FLAGMAN A SMALL WORK AREA WITH A DESK/COUNTER AND CHAIR WITHIN THE FIELD/SITE TRAILER, INCLUDING THE USE OF BATHROOM FACILITIES, WHERE THE FLAGMAN CAN CHECK IN/OUT WITH THE PROJECT, AS WELL AS TO THE FLAGMAN'S HOME TERMINAL. THE WORK AREA SHOULD PROVIDE ACCESS TO TWO (2) ELECTRICAL OUTLETS FOR RECHARGING RADIO(S), AND A LAPTOP COMPUTER; AND HAVE THE ABILITY TO PRINT OFF NEEDED DOCUMENTATION AND ORDERS AS NEEDED AT THE FIELD/SITE TRAILER. THIS SHOULD AID IN MAXIMIZING THE FLAGMAN'S TIME AND EFFICIENCY ON THE PROJECT.

11. THE PROPOSED PROJECT WILL NOT CHANGE THE QUANTITY AND/OR CHARACTER OF FLOW IN THE RAILWAY'S DITCHES AND/OR DRAINAGE STRUCTURES.

12. NORFOLK SOUTHERN HAS 54 TRAINS PER DAY AT 40 MPH.

13. CONTACT INFORMATION FOR THE RAILROAD IS AS FOLLOWS:
    MR. D. SHAWN STARLING, PE
    SENIOR ENGINEER PUBLIC IMPROVEMENTS
    ENGINEERING - DESIGN & CONSTRUCTION
    NORFOLK SOUTHERN RAILWAY COMPANY
    650 WEST PEACHTREE STREET NW - BOX 45
    ATLANTA, GA 30308
    TELEPHONE: (470) 463-6721
    EMAIL: DOUGLAS.STARLING@NSCORP.COM

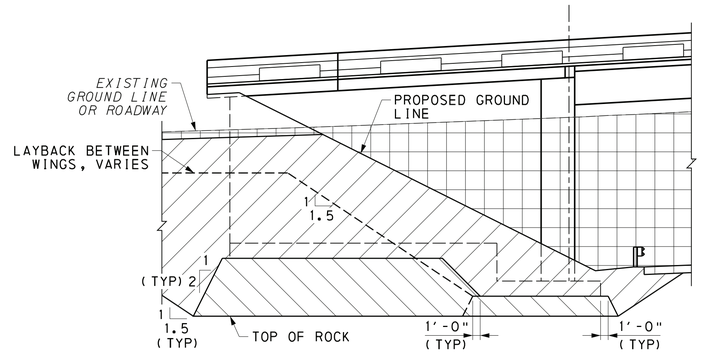

LIMITS OF EXCAVATION AT ABUTMENT 1 AND WINGS A & B

NOT TO SCALE

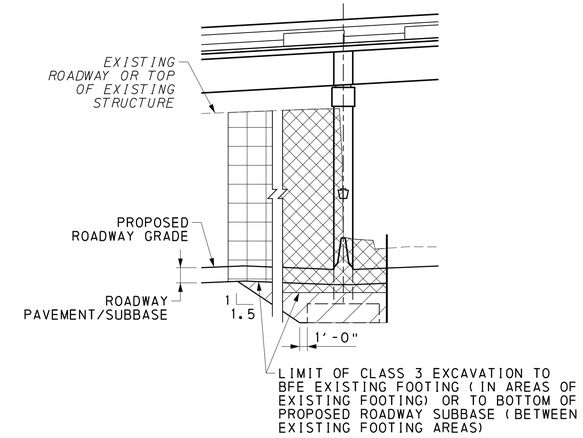

LIMITS OF EXCAVATION AT PIERS (PIER 1 SHOWN, PIER 2 SIMILAR)

NOT TO SCALE

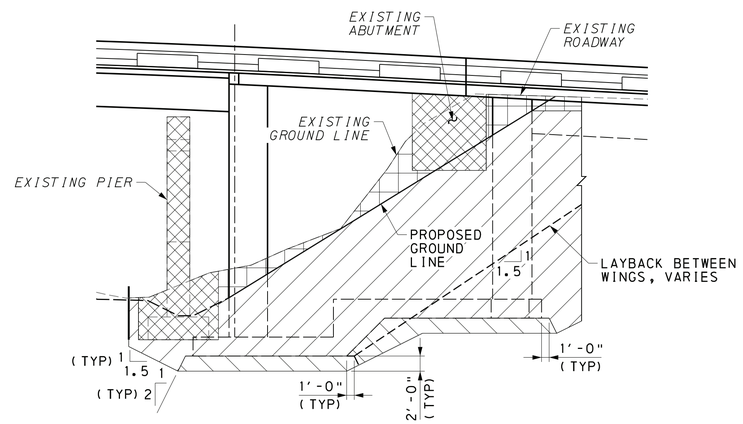

LIMITS OF EXCAVATION AT ABUTMENT 2 AND WINGS C & D

NOT TO SCALE

LEGEND

- OVEREXCAVATION AND BACKFILL WITH STRUCTURAL FILL
- CLASS 3 EXCAVATION
- CLASS 1 EXCAVATION
- REMOVAL OF EXISTING STRUCTURE

MOMENT SLAB NOTES:

1. CONTRACTOR IS PERMITTED TO PROVIDE A PRECAST BARRIER IN PLACE OF THE CAST-IN-PLACE BARRIER. CONTRACTOR MUST SUBMIT SHOP DRAWINGS FOR REVIEW AND ACCEPTANCE IN ACCORDANCE WITH PUBLICATION 408. THE SHOP DRAWINGS MUST COMPLETELY DETAIL THE ENTIRE MOMENT SLAB AND BARRIER ALONG WITH THE REQUIRED LENGTH.

   CONTRACTOR IS RESPONSIBLE FOR LIFTING, HANDLING, AND TRANSPORTATION STRESSES.

   CONTRACTOR IS RESPONSIBLE FOR TEMPORARY BRACING DESIGN CALCULATIONS AND DETAILS.

   LIFTING INSERTS:

   PROVIDE GALVANIZED LIFTING INSERTS.

   PROVIDE LIFTING INSERTS WITH A MINIMUM CAPACITY OF AT LEAST TWO TIMES THE CALCULATED LOAD ON THE INSERT.

   PROVIDE A MINIMUM OF TWO LIFTING INSERTS PER BARRIER SECTION.

Mark	Description	By	Chk'd	Recm'd	Date
REVISIONS					

SR 3013 PREVIOUSLY KNOWN AS LR 22075
BMS STR ID: 22-3013-0020-0291 MPMS/ECMS PROJ: 97828 BRKEY: 67416

HNTB

COMMONWEALTH OF PENNSYLVANIA
REGISTERED PROFESSIONAL
JUSTIN ROBERT MCCARTHY
ENGINEER
PE076998

PREPARED BY:
HNTB CORPORATION
4507 NORTH FRONT STREET
SUITE 300
HARRISBURG, PA 17110

COMMONWEALTH OF PENNSYLVANIA
DEPARTMENT OF TRANSPORTATION

DAUPHIN COUNTY
SR 0083 SECTION 079
SEG 0020 OFFSET 0291
SR 3013 (29TH STREET) STA 37+78.24 OVER
SR 0083 & NORFOLK SOUTHERN RAILWAY COMPANY
3-SPAN CONTINUOUS COMPOSITE PS CONCRETE
PA BULB-TEE BEAM BRIDGE
GENERAL NOTES 2

RECOMMENDED 12-6-2022

S-39451

6/21/2022
FILENAME: 63016-s-brB1-gen02.dgn

DES: MCA	DES CKD: JRM	DWG: MCA	DWG CKD: JRM

APPROXIMATE QUANTITIES - BRIDGE STRUCTURE, AS DESIGNED

ITEM NUMBER	DESCRIPTION	UNIT	NEAR MOMENT SLABS	NEAR APPR SLAB	ABUT 1	PIER 1	PIER 2	ABUT 2	FAR APPR SLAB	FAR MOMENT SLABS	SUPER STRUCTURE	TOTAL
8030-0001	BRIDGE STRUCTURE, AS DESIGNED, S-39451 (2)	LS	- - -	- - -	- - -	- - -	- - -	- - -	- - -	- - -	- - -	LS
(1)	CLASS 3 EXCAVATION (8)	CY	- - -	- - -	4900	160	1200	4900	- - -	- - -	- - -	11160
(1)	STRUCTURE BACKFILL	CY	- - -	- - -	1583	- - -	- - -	1942	- - -	- - -	- - -	3525
(1)	ELASTOMER WATERPROOFING MEMBRANE ON OTHER SURFACES (2)(9)	SY	- - -	- - -	76	24	24	89	- - -	- - -	- - -	213
(1)	NO. 57 COARSE AGGREGATE (3)	CY	- - -	- - -	19	- - -	- - -	18	- - -	- - -	- - -	37
(1)	NO. 3 COARSE AGGREGATE	CY	- - -	- - -	- - -	- - -	50	73	- - -	- - -	- - -	123
(1)	JUNCTION BOXES J.B.-25	EA	2	- - -	- - -	- - -	- - -	- - -	- - -	1	1	4
(1)	1/2" CONDUIT IN STRUCTURE (2)	LF	17	60	- - -	- - -	- - -	- - -	60	244	586	967
(1)	1-1/4" CONDUIT IN STRUCTURE	LF	- - -	- - -	- - -	- - -	- - -	- - -	- - -	- - -	70	70
(1)	2" CONDUIT IN STRUCTURE	LF	12	30	9	- - -	- - -	- - -	30	51	293	425
(1)	6" STRUCTURE FOUNDATION DRAIN	LF	- - -	- - -	135	- - -	- - -	131	- - -	- - -	- - -	266
(1)	MECHANICAL TEXTURING WITH LONGITUDINAL SAWED GROOVES	SY	- - -	100	- - -	- - -	- - -	- - -	100	- - -	977	1177
(1)	CLASS AAAP CEMENT CONCRETE (7)	CY	- - -	95	- - -	- - -	- - -	- - -	95	- - -	514	704
(1)	CLASS AA CEMENT CONCRETE	CY	155	29	12	1	1	13	29	316	264	820
(1)	CLASS A CEMENT CONCRETE	CY	- - -	- - -	419	172	196	644	- - -	- - -	- - -	1431
(1)	PROTECTIVE COATING FOR REINFORCED CONCRETE SURFACES (PENETRATING SEALERS, REINFORCED CONCRETE SUBSTRUCTURE SURFACES)	SY	- - -	- - -	88	408	469	83	- - -	- - -	- - -	1048
(1)	PROTECTIVE COATING FOR REINFORCED CONCRETE SURFACES (PENETRATING SEALERS, BRIDGE SUPERSTRUCTURE)	SY	152	224	- - -	- - -	- - -	- - -	224	611	2190	3401
(1)	NEOPRENE STRIP SEAL DAM (4" MOVEMENT)	LF	- - -	68	- - -	- - -	- - -	- - -	68	- - -	- - -	136
(1)	PRESTRESSED CONCRETE PA BULB-TEE BEAMS, 33/53 (5)	LF	- - -	- - -	- - -	- - -	- - -	- - -	- - -	- - -	2050	2050
(1)	RAILROAD PROTECTIVE FENCE, CURVED TOP, VINYL-COATED STEEL, BLACK (2)	LF	24	60	- - -	- - -	- - -	- - -	60	254	587	985
(1)	BARRIER LUMINAIRE (2)	EA	1	6	- - -	- - -	- - -	- - -	6	28	58	99
(1)	STAINING OF REINFORCED CONCRETE SURFACES (2)	SF	5	19	2328	5	5	3167	19	77	182	5807
(1)	ARCHITECTURAL SURFACE TREATMENT, 1/2" RELIEF, SPLIT BLOCK, 14"x22" (2)	SF	- - -	- - -	2328	- - -	- - -	3167	- - -	- - -	- - -	5495
AND												
1002-0052	REINFORCEMENT BARS, EPOXY COATED (4)(6)	LB	21011	27184	39738	18572	26318	75704	27184	45363	218269	499343
1018-0001	REMOVAL OF EXISTING BRIDGE, S-39451 (2)	LS	- - -	- - -	- - -	- - -	- - -	- - -	- - -	- - -	- - -	LS
9000-0500	OVEREXCAVATION AND BACKFILL WITH CLASS C CEMENT CONCRETE, S-39451 (2)	CY	- - -	- - -	- - -	21	21	- - -	- - -	- - -	- - -	42
9000-0501	OVEREXCAVATION AND BACKFILL WITH STRUCTURAL FILL, S-39451 (2)	CY	- - -	- - -	710	- - -	- - -	198	- - -	- - -	- - -	908
9000-0507	STANDPIPE, S-39451 (2)	LS	- - -	- - -	- - -	- - -	- - -	- - -	- - -	- - -	- - -	LS
9000-0509	EXTRACT EXISTING STEEL BEARING PILES (2)	EA	- - -	- - -	- - -	- - -	- - -	17	- - -	- - -	- - -	17
9203-0101	TEMPORARY EXCAVATION SUPPORT AND PROTECTION SYSTEM, S-39451 (2)	LS	- - -	- - -	- - -	- - -	- - -	- - -	- - -	- - -	- - -	LS

(1) ITEMS IN BRIDGE STRUCTURE LUMP SUM ITEM 8030-0001 - GIVEN FOR INFORMATION ONLY.

(2) SEE SPECIAL PROVISIONS.

(3) GEOTEXTILE, CLASS 1 IS INCIDENTAL TO NO. 57 COARSE AGGREGATE.

(4) FOR AS DESIGNED STRUCTURE. FOR ALTERNATE DESIGNS INCLUDE IN BRIDGE STRUCTURE LUMP SUM BID ITEM.

(5) INCLUDES P/S CONCRETE PA BULB-TEE BEAMS DELIVERED AND SET IN PLACE WITH NEOPRENE BEARING PADS, DOWEL HOLES, GROUT, PREFORMED CELLULAR POLYSTYRENE, NEOPRENE PADS, THE WATERPROOFING SYSTEM AS PER BC-788M, AND ALL OTHER MATERIAL AND WORK FOR A COMPLETE INSTALLATION.

(6) INCLUDES 449 LBS OF STAINLESS STEEL DOWEL BARS.

(7) INCLUDES 25 CY OF CLASS AAAP CONCRETE IN THE VALLEYS OF SIP FORMS.

(8) FOR EXCAVATION PAY LIMITS, SEE SHEET 5.

(9) SEE ATTACHMENT BC-788 MODIFIED "SPRAY-ON WATERPROOFING DETAILS".

ALTERNATE STRUCTURE ITEMS

ITEM NUMBER	DESCRIPTION	UNIT	TOTAL
8030-0001	BRIDGE STRUCTURE, AS DESIGNED, S-39451 (2)	LS	LUMP SUM
8000-0001	PRESTRESSED CONCRETE BRIDGE STRUCTURE (2)	LS	LUMP SUM
8100-0001	STEEL BRIDGE STRUCTURE (2)	LS	LUMP SUM

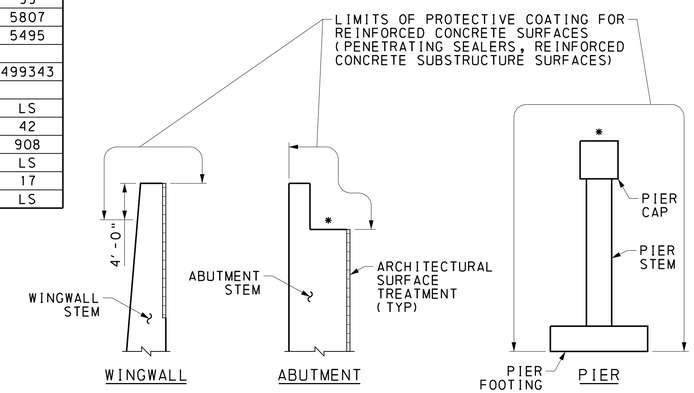

* DO NOT APPLY PROTECTIVE COATING WITHIN 2" OF BEARING PADS

SUBSTRUCTURE PROTECTIVE COATING LIMITS

NOT TO SCALE

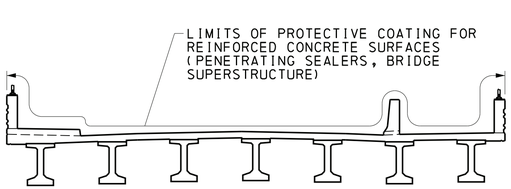

SUPERSTRUCTURE

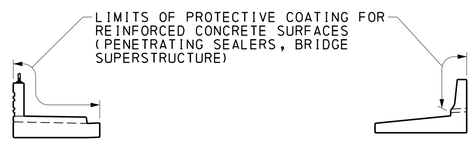

SOUTHWEST MOMENT SLAB (AT-GRADE)

(NORTHWEST MOMENT SLAB SIMILAR)

SOUTHEAST MOMENT SLAB #1

(NORTHEAST MOMENT SLAB #2 SIMILAR)

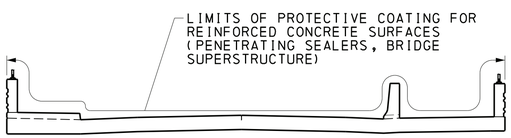

APPROACH SLABS

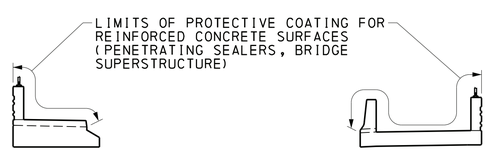

SOUTHWEST MOMENT SLAB (BURIED)

(NORTHWEST MOMENT SLAB SIMILAR)

SOUTHEAST MOMENT SLAB #2

(NORTHEAST MOMENT SLAB #1 SIMILAR)

SUPERSTRUCTURE PROTECTIVE COATING LIMITS

NOT TO SCALE

Mark	Description	By	Chk'd	Recm'd	Date
REVISIONS					

SR 3013 PREVIOUSLY KNOWN AS LR 22075

BMS STR ID: 22-3013-0020-0291 MPMS/ECMS PROJ: 97828 BRKEY: 67416

HNTB

COMMONWEALTH OF PENNSYLVANIA
REGISTERED PROFESSIONAL
JUSTIN ROBERT MCCARTHY
ENGINEER
PE076998

COMMONWEALTH OF PENNSYLVANIA
DEPARTMENT OF TRANSPORTATION

DAUPHIN COUNTY
SR 0083 SECTION 079
SEG 0020 OFFSET 0291
SR 3013 (29TH STREET) STA 37+78.24 OVER
SR 0083 & NORFOLK SOUTHERN RAILWAY COMPANY

3-SPAN CONTINUOUS COMPOSITE PS CONCRETE
PA BULB-TEE BEAM BRIDGE
QUANTITIES

PREPARED BY:
HNTB CORPORATION
4507 NORTH FRONT STREET
SUITE 300
HARRISBURG, PA 17110

RECOMMENDED 12-6-2022

S-39451

12/2/2022
FILENAME: 63016-s-br81-sum01.dgn

DES: MCA	DES CKD: CEK	DWG: SMZ	DWG CKD: JRM

BRIDGE 1

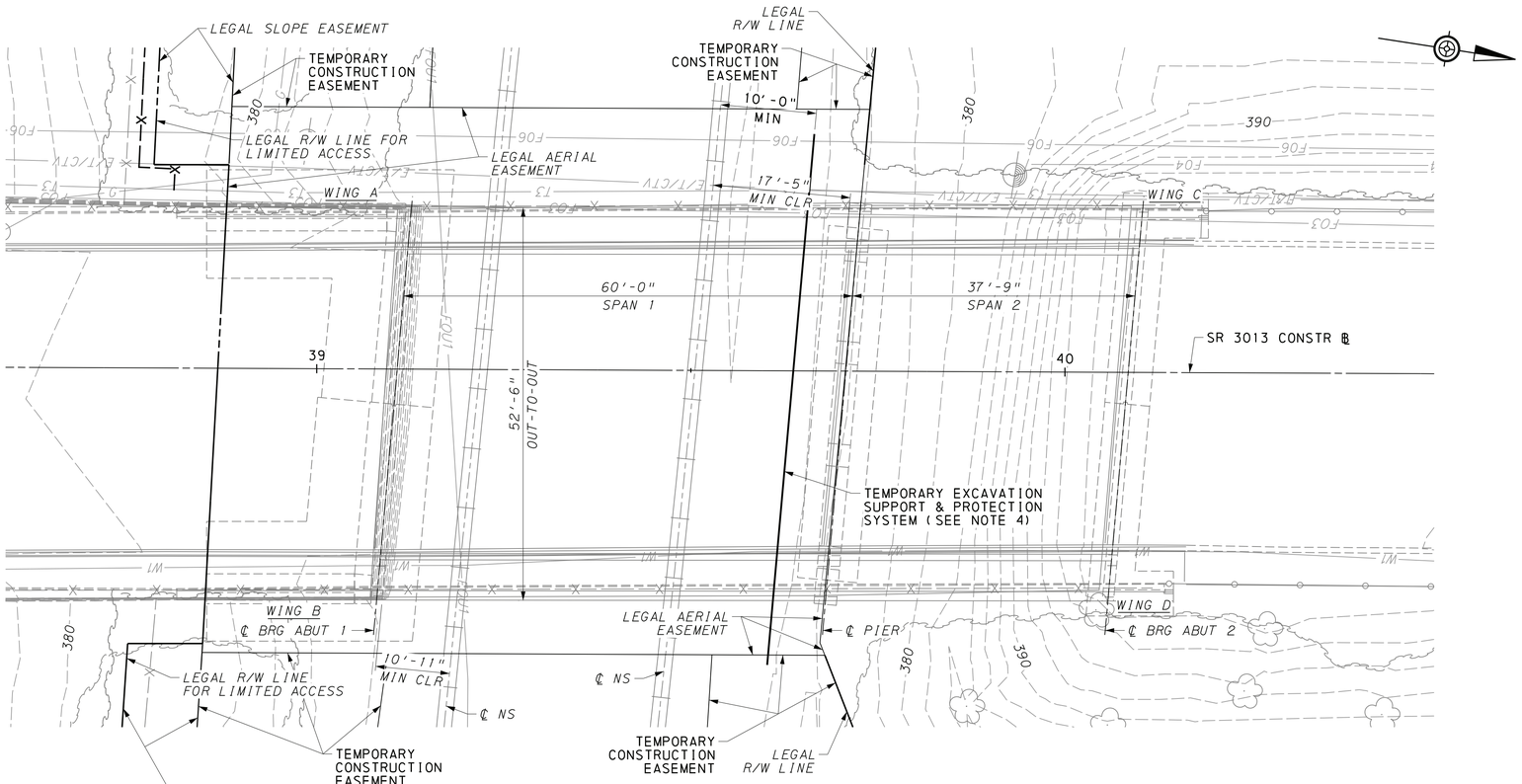

PLAN

5 0 5 10 FEET

NOTES:

1. SUGGESTED DEMOLITION SEQUENCE IS PROVIDED "FOR INFORMATION ONLY". SEE DESCRIPTION OF SUGGESTED SEQUENCE ON SHEET 8.
2. NORFOLK SOUTHERN REQUIRES CRANES AND LIFTING EQUIPMENT TO HAVE A CAPACITY OF 150% OF THE EXPECTED LOAD (INCLUDING RIGGING) FOR ALL LIFTS OVER RAILROAD PROPERTY.
3. ALL DEMOLITION RELATED ACTIVITIES TAKING PLACE ON NORFOLK SOUTHERN PROPERTY NEED TO BE COORDINATED WITH AND APPROVED BY NORFOLK SOUTHERN.
4. SHORING FOR EXCAVATION SHALL BE IN ACCORDANCE WITH NORFOLK SOUTHERN REQUIREMENTS. NO EXCAVATIONS WILL BE ALLOWED WITHIN 10 FEET OF CENTERLINE OF EXISTING TRACK.
5. EXISTING 29TH STREET BRIDGE OVER SR 0083 TO BE REMOVED, NOT SHOWN FOR CLARITY.

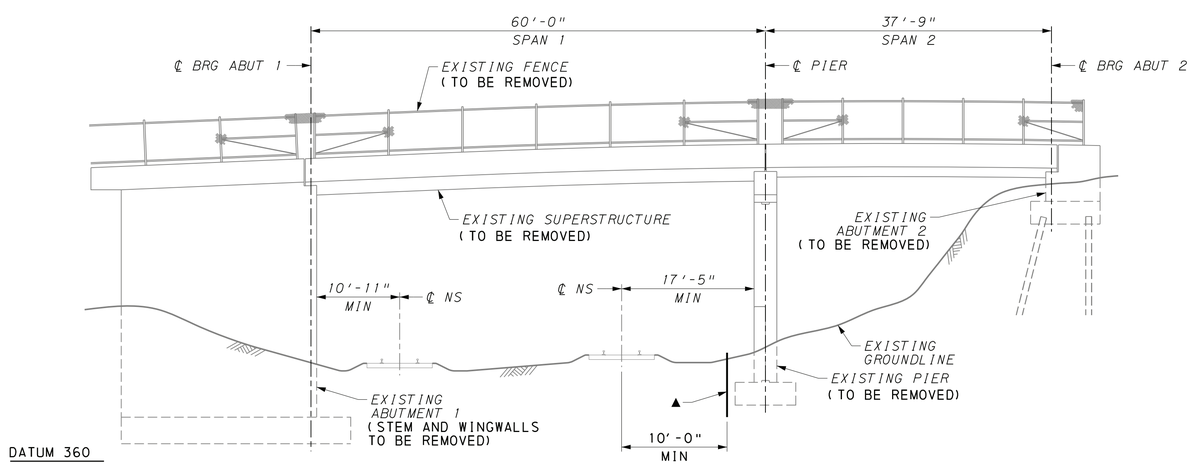

ELEVATION

5 0 5 10 FEET

▲ ALL SHORING WITHIN 14 FEET FROM THE TRACK CENTERLINE IS INTERLOCKING SHEETING

Mark	Description	By	Chk'd	Recm'd	Date
REVISIONS					

SR 3013 PREVIOUSLY KNOWN AS LR 22075
BMS STR ID: 22-3013-0020-0291 MPMS/ECMS PROJ: 97828 BRKEY: 67416

HNTB

COMMONWEALTH OF PENNSYLVANIA
DEPARTMENT OF TRANSPORTATION

COMMONWEALTH OF PENNSYLVANIA REGISTERED PROFESSIONAL JUSTIN ROBERT MCCARTHY ENGINEER PE076998

DAUPHIN COUNTY
SR 0083 SECTION 079
SEG 0020 OFFSET 0291
SR 3013 (29TH STREET) STA 37+78.24 OVER
SR 0083 & NORFOLK SOUTHERN RAILWAY COMPANY
3-SPAN CONTINUOUS COMPOSITE PS CONCRETE
PA BULB-TEE BEAM BRIDGE
SUGGESTED DEMOLITION SEQUENCE 1

PREPARED BY:
HNTB CORPORATION
4507 NORTH FRONT STREET
SUITE 300
HARRISBURG, PA 17110

RECOMMENDED 12-6-2022

SHEET 7 OF 93

S-39451

6/23/2022
FILENAME: 63016-s-brBI-dem01.dgn

DES: SMZ	DES CKD: JMA	DWG: SMZ	DWG CKD: JMA

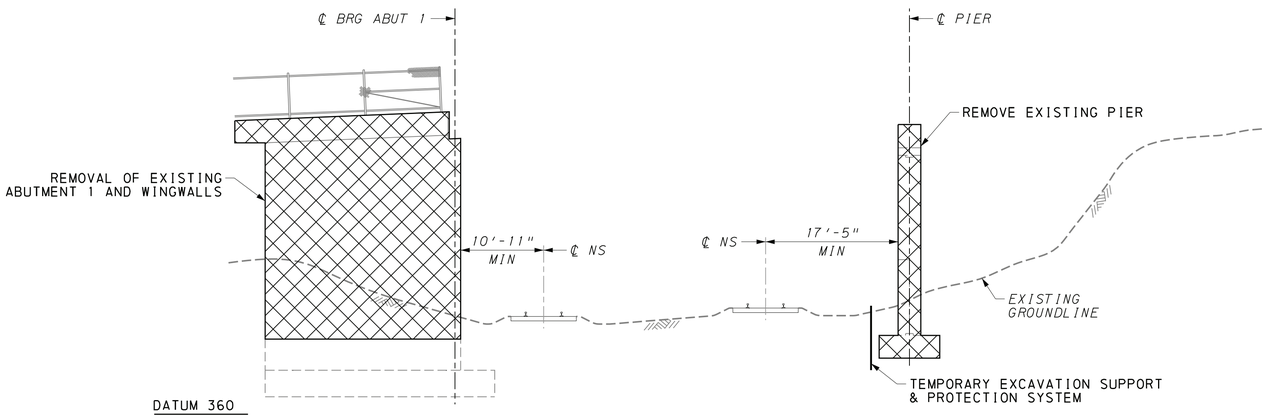

ELEVATION - STEP 6

5 0 5 10 FEET

NOTES:

1. FOR SUGGESTED EXISTING ABUTMENT REMOVAL DETAILS, SEE SHEET 9.
2. EXISTING PIER TO BE REMOVED IN ITS ENTIRETY.
3. EXISTING ABUTMENT 2 STEM, WINGWALLS AND PILE CAP TO BE REMOVED IN THEIR ENTIRETY. EXISTING PILES TO BE REMOVED IN THEIR ENTIRETY.

SUGGESTED DEMOLITION SEQUENCE:

STEP 1: REMOVE THE EXISTING SUPERSTRUCTURE OVER NORFOLK SOUTHERN.

STEP 2: REMOVE THE BACKFILL BEHIND THE VERTICAL PORTIONS OF THE RIGID FRAME OVER SR 0083. REMOVE THE BACKFILL BEHIND THE NORTHERN ABUTMENT (EXISTING ABUTMENT 2) OF THE STRUCTURE OVER NORFOLK SOUTHERN.

STEP 3: REMOVE THE RIGID FRAME OVER SR 0083.

STEP 4: REMOVE BACKFILL AS NEEDED TO ACCESS THE EXISTING SOUTHERN ABUTMENT (EXISTING ABUTMENT 1) OF THE STRUCTURE OVER NORFOLK SOUTHERN TO ADVANCE THE REMOVAL OF THE ABUTMENT STEM AND WINGWALLS. REMOVE THE EXISTING ABUTMENT 2 AND ALL EXISTING PILES.

STEP 5: REMOVE EXISTING WINGWALLS OF THE STRUCTURE OVER SR 0083. EXCAVATE THE NORTHERN EMBANKMENT TO ALLOW FOR CONSTRUCTION OF THE NEW ABUTMENT 2 AND ACCESS TO THE EXISTING PIER FOR THE STRUCTURE OVER NORFOLK SOUTHERN.

STEP 6: REMOVE THE EXISTING ABUTMENT 1 AND WINGWALLS FOR THE STRUCTURE OVER NORFOLK SOUTHERN. SEE THE SUGGESTED ABUTMENT REMOVAL DETAILS ON THIS SHEET AND SHEET 9. REMOVE THE EXISTING PIER.

Mark	Description	By	Chk'd	Recm'd	Date
REVISIONS					

SR 3013 PREVIOUSLY KNOWN AS LR 22075
BMS STR ID: 22-3013-0020-0291 MPMS/ECMS PROJ: 97828 BRKEY: 67416

HNTB

COMMONWEALTH OF PENNSYLVANIA
DEPARTMENT OF TRANSPORTATION

COMMONWEALTH OF PENNSYLVANIA
REGISTERED PROFESSIONAL
JUSTIN ROBERT MCCARTHY
ENGINEER
PE076998

DAUPHIN COUNTY
SR 0083 SECTION 079
SEG 0020 OFFSET 0291
SR 3013 (29TH STREET) STA 37+78.24 OVER
SR 0083 & NORFOLK SOUTHERN RAILWAY COMPANY
3-SPAN CONTINUOUS COMPOSITE PS CONCRETE
PA BULB-TEE BEAM BRIDGE
SUGGESTED DEMOLITION SEQUENCE 2

PREPARED BY:
HNTB CORPORATION
4507 NORTH FRONT STREET
SUITE 300
HARRISBURG, PA 17110

RECOMMENDED 12-6-2022

SHEET 8 OF 93

S-39451

6/23/2022
FILENAME: 63016-s-brB1-dem02.dgn

DES: SMZ	DES CKD: JMA	DWG: JTM	DWG CKD: JMA

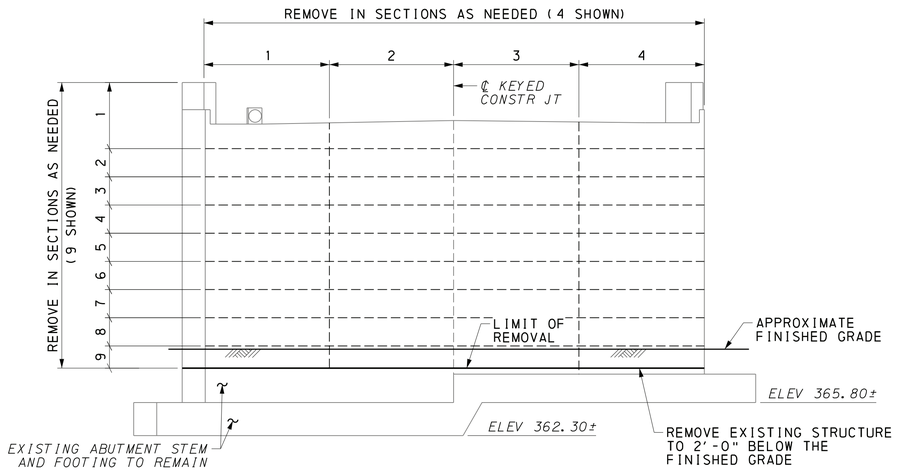

EXISTING ABUTMENT 1 ELEVATION

2 0 4 8 FEET

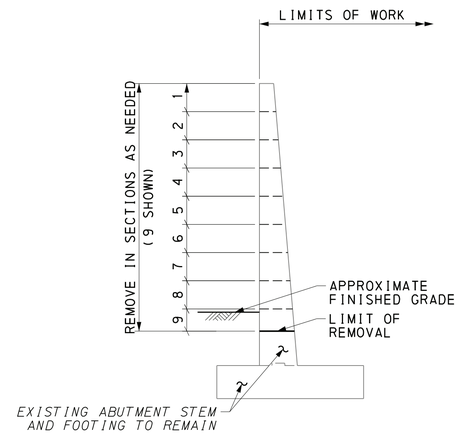

EXISTING ABUTMENT 1 SECTION

2 0 4 8 FEET

NOTES:

1. THE NUMBER AND SIZE OF CONCRETE SECTIONS TO BE REMOVED IS AT THE DISCRETION OF THE CONTRACTOR.
2. DUE TO THE CLOSE PROXIMITY OF THE EXISTING ABUTMENT TO THE EXISTING TRACK, TEMPORARY SHORING MAY BE REQUIRED TO MAINTAIN THE BALLAST AND SUB-BALLAST.
3. IF TEMPORARY SHORING AT THE EXISTING ABUTMENT 1 IS REQUIRED, THE CONTRACTOR SHALL DESIGN AND INSTALL TEMPORARY SHORING THAT DOES NOT ENCROACH WITHIN 10 FEET OF CENTERLINE OF EXISTING TRACK. DETAILS AND REQUIREMENTS FOR THE TEMPORARY SHORING SHALL BE COORDINATED WITH AND APPROVED BY NORFOLK SOUTHERN.

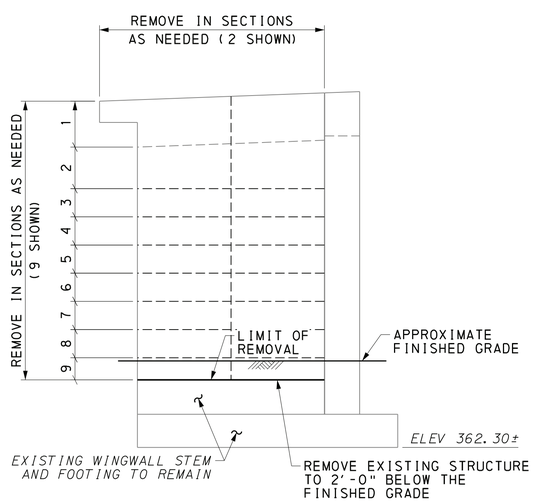

EXISTING WINGWALL ELEVATION

2 0 4 8 FEET

(WING B SHOWN, WING A SIMILAR)

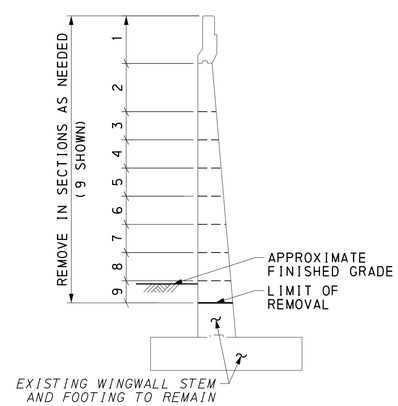

EXISTING WINGWALL SECTION

2 0 4 8 FEET

(WING B SHOWN, WING A SIMILAR)

Mark	Description	By	Chk'd	Recm'd	Date

REVISIONS

SR 3013 PREVIOUSLY KNOWN AS LR 22075
BMS STR ID: 22-3013-0020-0291 MPMS/ECMS PROJ: 97828 BRKEY: 67416

HNTB

COMMONWEALTH OF PENNSYLVANIA
DEPARTMENT OF TRANSPORTATION

DAUPHIN COUNTY
SR 0083 SECTION 079
SEG 0020 OFFSET 0291
SR 3013 (29TH STREET) STA 37+78.24 OVER
SR 0083 & NORFOLK SOUTHERN RAILWAY COMPANY
3-SPAN CONTINUOUS COMPOSITE PS CONCRETE
PA BULB-TEE BEAM BRIDGE
SUGGESTED DEMOLITION SEQUENCE 3

COMMONWEALTH OF PENNSYLVANIA
REGISTERED PROFESSIONAL
JUSTIN ROBERT MCCARTHY
ENGINEER
PE076998

PREPARED BY:
HNTB CORPORATION
4507 NORTH FRONT STREET
SUITE 300
HARRISBURG, PA 17110

RECOMMENDED 12-6-2022

SHEET 9 OF 93

S-39451

6/23/2022
FILENAME: 63016-s-brB1-dem03.dgn

DES: SMZ	DES CKD: JMA	DWG: SMZ	DWG CKD: JMA

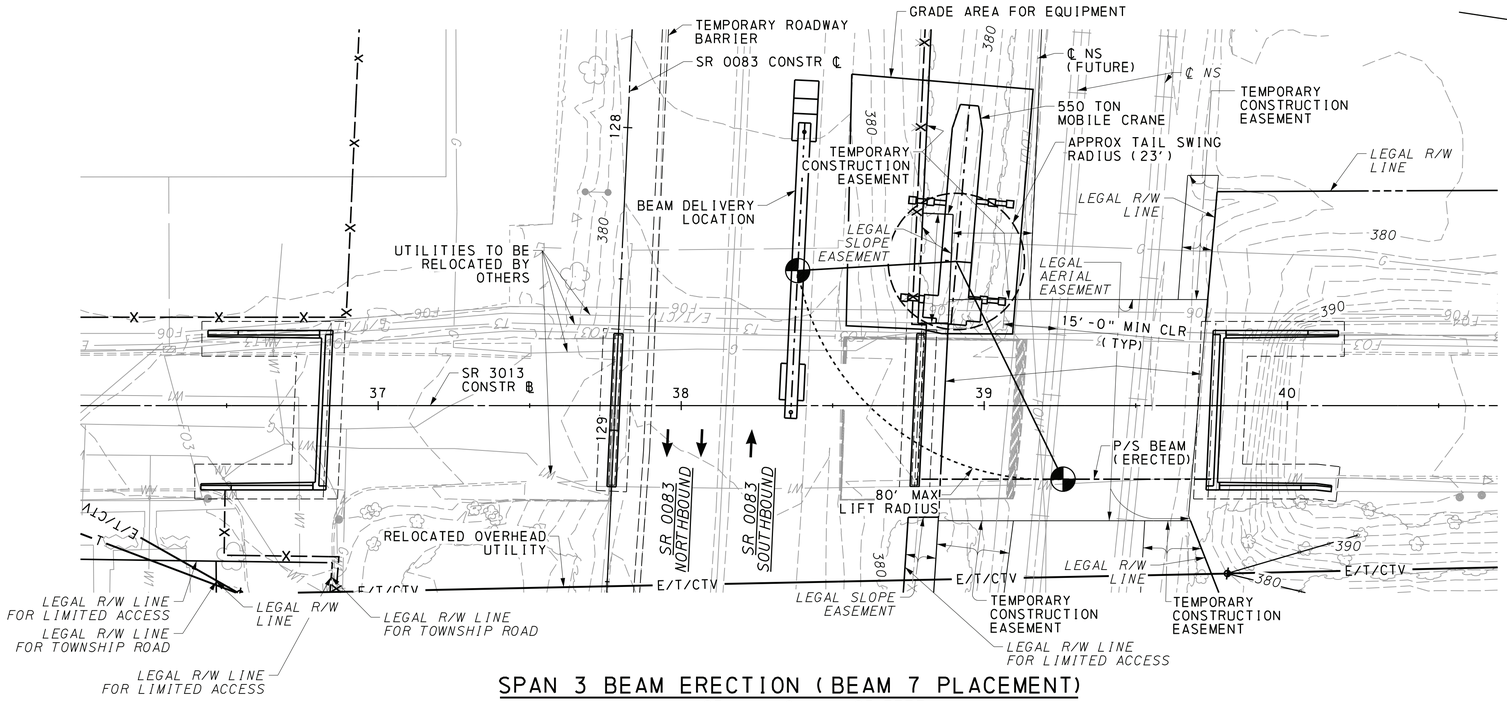

SPAN 3 BEAM ERECTION (BEAM 7 PLACEMENT)

25 0 25 FEET

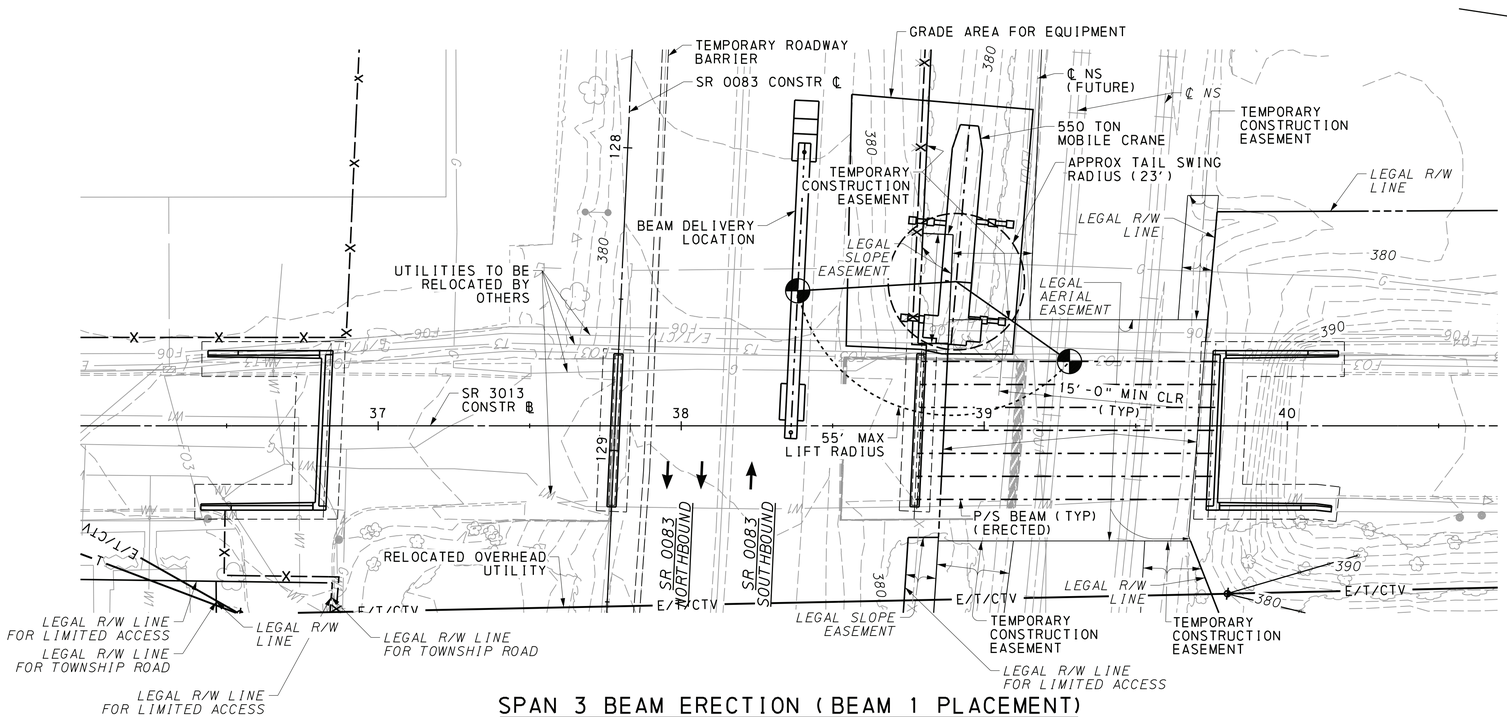

SPAN 3 BEAM ERECTION (BEAM 1 PLACEMENT)

25 0 25 FEET

LEGEND:

PICK POINT

SUGGESTED CONSTRUCTION SEQUENCE:

STAGE 1: REMOVE EXISTING STRUCTURE.

STAGE 2: CONSTRUCT NEW SUBSTRUCTURE.

STAGE 3: PERFORM CLEARING, GRUBBING AND GRADING AS NECESSARY FOR CRANE PLACEMENT.

STAGE 4: ERECT SPAN 3 BEAMS.

STAGE 5: ERECT SPAN 2 BEAMS.

STAGE 6: ERECT SPAN 1 BEAMS.

STAGE 7: CONSTRUCT DECK.

STAGE 8: CONSTRUCT APPROACH SLABS.

STAGE 9: CONSTRUCT BARRIERS.

NOTES:

1. CONCEPTUAL ERECTION PLAN IS PROVIDED "FOR INFORMATION ONLY".
2. NORFOLK SOUTHERN REQUIRES CRANES TO HAVE A CAPACITY OF 150% OF THE EXPECTED LOAD (INCLUDING BEAM & RIGGING) AT THE REQUIRED REACH FOR ALL LIFTS OVER RAILROAD PROPERTY.
3. ALL LIFTS OVER NORFOLK SOUTHERN PROPERTY NEED TO BE COORDINATED AND APPROVED BY NORFOLK SOUTHERN.
4. ESTIMATED PA BULB-TEE WEIGHT IS 85.0 KIPS (DOES NOT INCLUDE 1.5 RAILROAD FACTOR).
5. CRANE SIZE SHOWN IS THE ESTIMATED CRANE SIZE REQUIRED TO PERFORM THE CONCEPTUAL ERECTION PLAN. THE CONTRACTOR IS RESPONSIBLE FOR DETERMINING THE ACTUAL CRANE SIZE.
6. PROVIDE SHORT TERM TEMPORARY MAINTENANCE AND PROTECTION OF THE SOUTHBOUND RIGHT LANE TRAFFIC CLOSURE FOR BEAM DELIVERY.

REFERENCES:	SHEETS:
GENERAL PLAN	1
GENERAL NOTES	4 & 5
CONCEPTUAL ERECTION PLAN 2	11
CONCEPTUAL ERECTION PLAN 3	12

Mark	Description	By	Chk'd	Recm'd	Date

REVISIONS

SR 3013 PREVIOUSLY KNOWN AS LR 22075
BMS STR ID: 22-3013-0020-0291 MPMS/ECMS PROJ: 97828 BRKEY: 67416

HNTB

COMMONWEALTH OF PENNSYLVANIA
DEPARTMENT OF TRANSPORTATION

DAUPHIN COUNTY
SR 0083 SECTION 079
SEG 0020 OFFSET 0291
SR 3013 (29TH STREET) STA 37+78.24 OVER
SR 0083 & NORFOLK SOUTHERN RAILWAY COMPANY
3-SPAN CONTINUOUS COMPOSITE PS CONCRETE
PA BULB-TEE BEAM BRIDGE
CONCEPTUAL ERECTION PLAN 1

COMMONWEALTH OF PENNSYLVANIA
REGISTERED PROFESSIONAL
JUSTIN ROBERT MCCARTHY
ENGINEER
PE076998

PREPARED BY:
HNTB CORPORATION
4507 NORTH FRONT STREET
SUITE 300
HARRISBURG, PA 17110

RECOMMENDED 12-6-2022

SHEET 10 OF 93

S-39451

6/23/2022
FILENAME: 63016-s-brB1-cr001.dgn

DES: JMA	DES CKD: MCA	DWG: MCA	DWG CKD: JMA

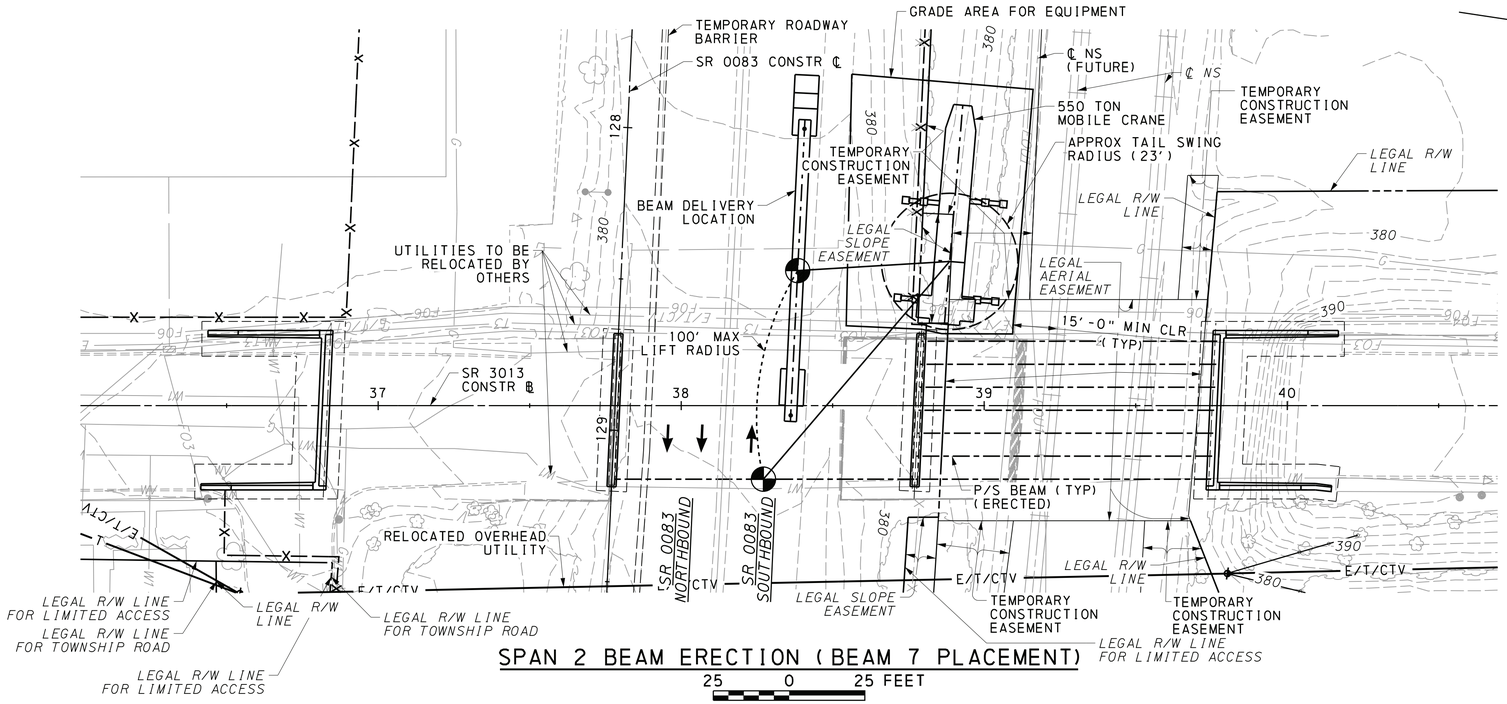

SPAN 2 BEAM ERECTION (BEAM 7 PLACEMENT)

25 0 25 FEET

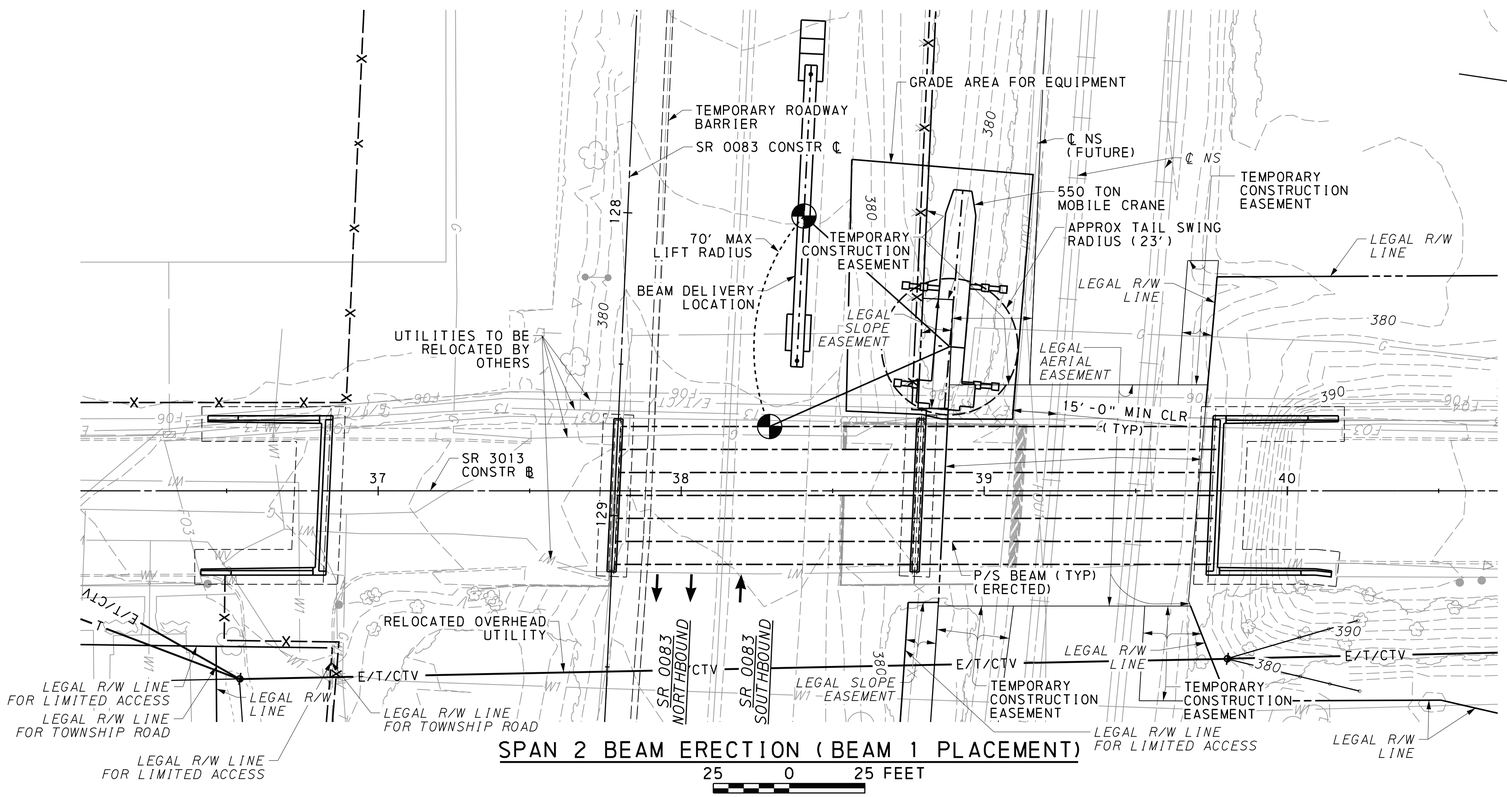

SPAN 2 BEAM ERECTION (BEAM 1 PLACEMENT)

25 0 25 FEET

LEGEND:

PICK POINT

NOTES:

1. CONCEPTUAL ERECTION PLAN IS PROVIDED "FOR INFORMATION ONLY".
2. COORDINATE CRANE PLACEMENT REQUIREMENTS WITH NORFOLK SOUTHERN DUE TO THE PROXIMITY OF THE CRANE IN RELATION TO NORFOLK SOUTHERN PROPERTY.
3. ESTIMATED PA BULB-TEE WEIGHT IS 87.0 KIPS.
4. CRANE SIZE SHOWN IS THE ESTIMATED CRANE SIZE REQUIRED TO PERFORM THE CONCEPTUAL ERECTION PLAN. THE CONTRACTOR IS RESPONSIBLE FOR DETERMINING THE ACTUAL CRANE SIZE.
5. PROVIDE SHORT TERM TEMPORARY MAINTENANCE AND PROTECTION OF THE SOUTHBOUND RIGHT LANE TRAFFIC CLOSURE FOR BEAM DELIVERY.
6. PROVIDE TEMPORARY ROLLING CLOSURES OF BOTH NORTHBOUND AND SOUTHBOUND LANES FOR SPAN 2 BEAM INSTALLATION.

REFERENCES:	SHEETS:
GENERAL PLAN	1
GENERAL NOTES	4 & 5
CONCEPTUAL ERECTION PLAN 1	10
CONCEPTUAL ERECTION PLAN 3	12

Mark	Description	By	Chk'd	Recm'd	Date
REVISIONS					

SR 3013 PREVIOUSLY KNOWN AS LR 22075
BMS STR ID: 22-3013-0020-0291 MPMS/ECMS PROJ: 97828 BRKEY: 67416

HNTB

COMMONWEALTH OF PENNSYLVANIA
DEPARTMENT OF TRANSPORTATION

DAUPHIN COUNTY
SR 0083 SECTION 079
SEG 0020 OFFSET 0291
SR 3013 (29TH STREET) STA 37+78.24 OVER
SR 0083 & NORFOLK SOUTHERN RAILWAY COMPANY

3-SPAN CONTINUOUS COMPOSITE PS CONCRETE
PA BULB-TEE BEAM BRIDGE

CONCEPTUAL ERECTION PLAN 2

COMMONWEALTH OF PENNSYLVANIA
REGISTERED PROFESSIONAL
JUSTIN ROBERT MCCARTHY
ENGINEER
PE076998

PREPARED BY:
HNTB CORPORATION
4507 NORTH FRONT STREET
SUITE 300
HARRISBURG, PA 17110

RECOMMENDED 12-6-2022

SHEET 11 OF 93

S-39451

6/23/2022
FILENAME: 63016-s-brB1-cra02.dgn

DES: JMA	DES CKD: MCA	DWG: MCA	DWG CKD: JMA

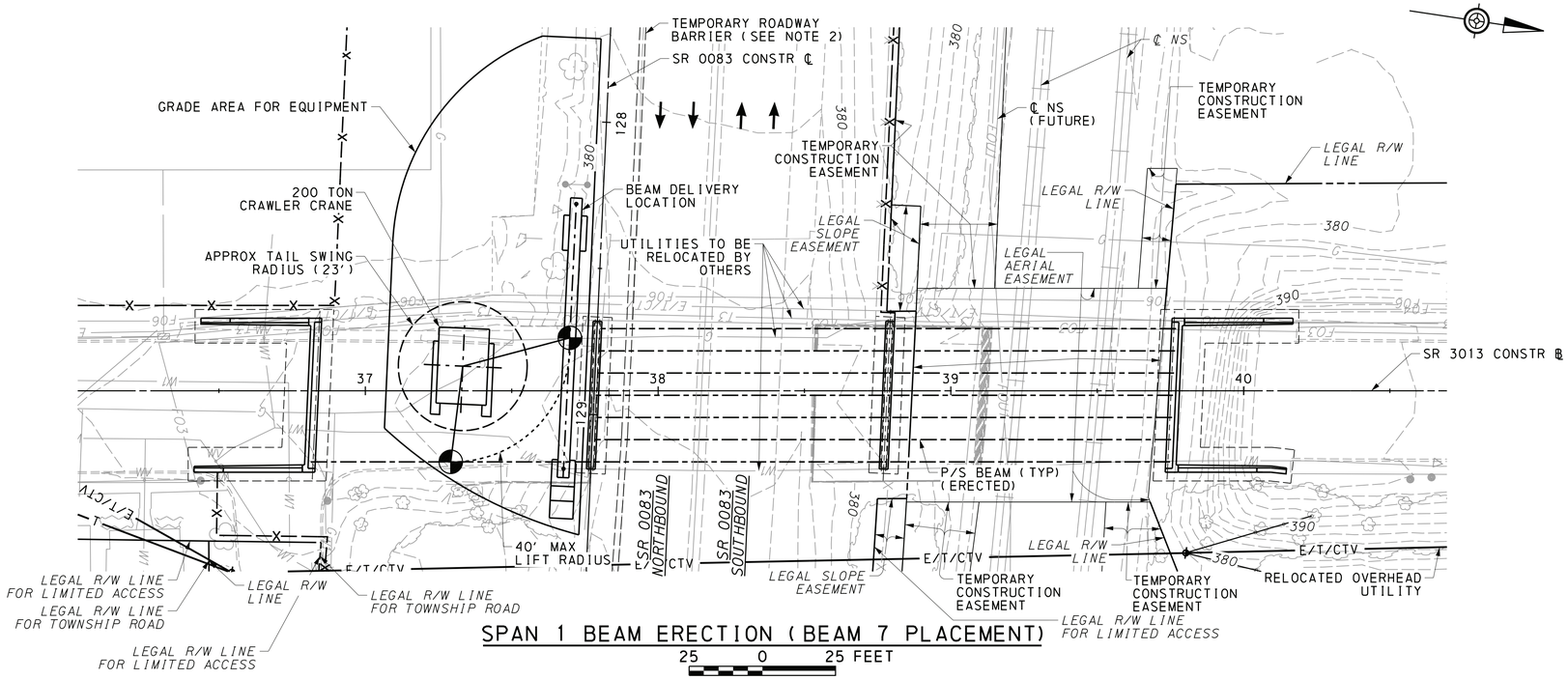

SPAN 1 BEAM ERECTION (BEAM 7 PLACEMENT)

25 0 25 FEET

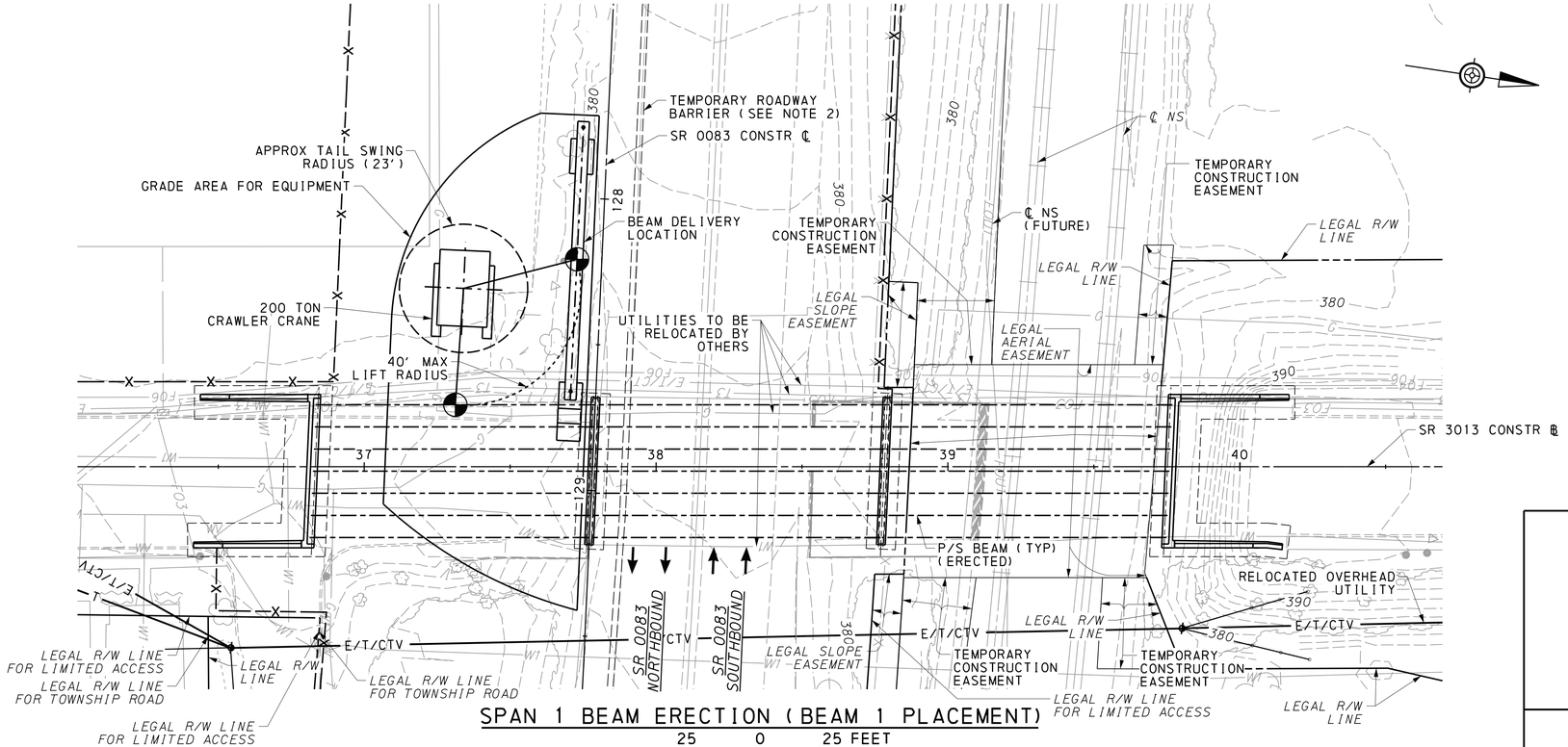

SPAN 1 BEAM ERECTION (BEAM 1 PLACEMENT)

25 0 25 FEET

LEGEND:

PICK POINT

NOTES:

1. CONCEPTUAL ERECTION PLAN IS PROVIDED "FOR INFORMATION ONLY".
2. ADJUST TEMPORARY ROADWAY BARRIER, AS REQUIRED, TO FACILITATE SPAN 1 BEAM DELIVERY LOCATION.
3. ESTIMATED PA BULB-TEE WEIGHT IS 83.0 KIPS.
4. CRANE SIZE SHOWN IS THE ESTIMATED CRANE SIZE REQUIRED TO PERFORM THE CONCEPTUAL ERECTION PLAN. THE CONTRACTOR IS RESPONSIBLE FOR DETERMINING THE ACTUAL CRANE SIZE.

REFERENCES:	SHEETS:
GENERAL PLAN	1
GENERAL NOTES	4 & 5
CONCEPTUAL ERECTION PLAN 1	10
CONCEPTUAL ERECTION PLAN 2	11

Mark	Description	By	Chk'd	Recm'd	Date

REVISIONS

SR 3013 PREVIOUSLY KNOWN AS LR 22075
BMS STR ID: 22-3013-0020-0291 MPMS/ECMS PROJ: 97828 BRKEY: 67416

HNTB

COMMONWEALTH OF PENNSYLVANIA
DEPARTMENT OF TRANSPORTATION

DAUPHIN COUNTY
SR 0083 SECTION 079
SEG 0020 OFFSET 0291
SR 3013 (29TH STREET) STA 37+78.24 OVER
SR 0083 & NORFOLK SOUTHERN RAILWAY COMPANY
3-SPAN CONTINUOUS COMPOSITE PS CONCRETE
PA BULB-TEE BEAM BRIDGE
CONCEPTUAL ERECTION PLAN 3

COMMONWEALTH OF PENNSYLVANIA
REGISTERED PROFESSIONAL
JUSTIN ROBERT MCCARTHY
ENGINEER
PE076998

PREPARED BY:
HNTB CORPORATION
4507 NORTH FRONT STREET
SUITE 300
HARRISBURG, PA 17110

RECOMMENDED 12-6-2022

SHEET 12 OF 93

S-39451

6/23/2022
FILENAME 63016-s-brB1-crd03.dgn

DES: JMA	DES CKD: MCA	DWG: MCA	DWG CKD: JMA

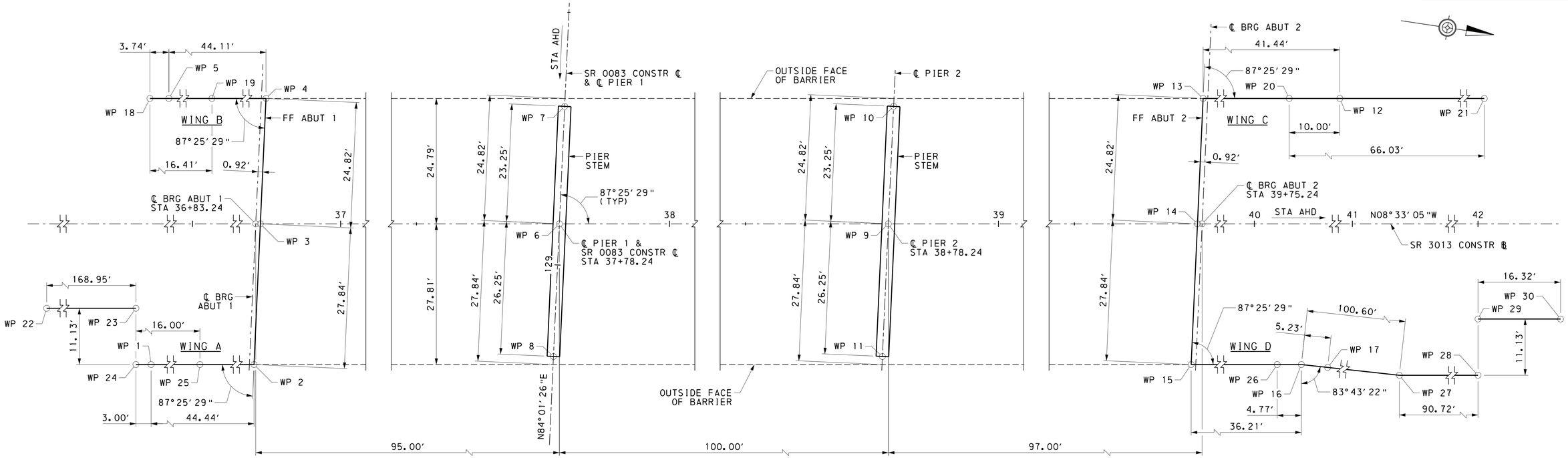

STAKE-OUT PLAN

NOT TO SCALE

WORKING POINT COORDINATES				
WP	STATION	OFFSET	NORTHING	EASTING
1	36+38.47	27.81' RT	338038.5092	2222644.1498
2	36+82.91	27.81' RT	338082.4542	2222637.5419
3	36+84.16	0.00'	338079.5556	2222609.8526
4	36+85.27	24.79' LT	338076.9719	2222585.1707
5	36+41.17	24.79' LT	338033.3566	2222591.7290
6	37+78.24	0.00'	338172.5921	2222595.8629
7	37+79.28	23.23' LT	338170.1715	2222572.7392
8	37+77.06	26.22' RT	338175.3250	2222621.9702
9	38+78.24	0.00'	338271.4804	2222580.9933
10	38+79.28	23.23' LT	338269.0598	2222557.8696
11	38+77.06	26.22' RT	338274.2133	2222607.1006
12	40+16.88	24.79' LT	338404.8892	2222535.8625
13	39+75.44	24.79' LT	338363.9109	2222542.0243
14	39+74.32	0.00'	338366.4946	2222566.7062
15	39+73.07	27.81' RT	338369.3931	2222594.3955
16	40+09.28	27.81' RT	338405.1979	2222589.0116
17	40+14.48	28.38' RT	338410.4254	2222588.8040
18	36+37.42	24.79' LT	338029.6544	2222592.2857
19	36+53.83	24.79' LT	338045.8824	2222589.8456
20	40+06.88	24.79' LT	338395.0004	2222537.3495
21	40+72.91	24.79' LT	338460.3000	2222527.5305
22	34+66.52	16.69' RT	337866.8144	2222658.7171
23	36+35.47	16.69' RT	338033.8883	2222633.5946
24	36+35.47	27.81' RT	338035.5426	2222644.5960
25	36+51.47	27.81' RT	338051.3647	2222642.2168
26	40+04.51	27.81' RT	338400.4826	2222589.7207
27	41+09.28	38.81' RT	338505.7219	2222585.0197
28	42+00.00	38.81' RT	338595.4348	2222571.5298
29	42+00.00	27.69' RT	338593.7806	2222560.5285
30	42+16.32	27.69' RT	338609.9198	2222558.1017

FOUR PLACE COORDINATES ARE FOR COMPUTATIONAL PURPOSES ONLY AND DO NOT IMPLY A PRECISION BEYOND TWO DECIMAL POINTS.

WORKING POINT CLOSURE DISTANCES	
WP TO WP	DISTANCE
2 TO 13	297.22'
4 TO 15	292.57'

SR 3013 CONSTR ℄ COORDINATES				
POINT	STATION	NORTHING	EASTING	BEARING
POB	29+91.55	337394.6480	2222712.8406	N08°33'05"W
POE	44+88.28	338874.7422	2222490.2821	

NOTES:

1. WORK POINTS ALONG FRONT FACE OF ABUTMENTS AND WINGS ARE LOCATED AT THE FRONT FACE OF THE ARCHITECTURAL SURFACE TREATMENT.
2. WORK POINTS AT THE PIER ARE LOCATED ALONG THE CENTERLINE OF PIER.

Mark	Description	By	Chk'd	Recm'd	Date
REVISIONS					

SR 3013 PREVIOUSLY KNOWN AS LR 22075
BMS STR ID: 22-3013-0020-0291 MPMS/ECMS PROJ: 97828 BRKEY: 67416

REFERENCES:	SHEETS:
GENERAL PLAN	1
MOMENT SLAB GENERAL PLANS	2
GENERAL NOTES	4 & 5
ABUTMENT 1 PLAN	15
ABUTMENT 2 PLAN	24
PIER 1 PLAN	35
PIER 2 PLAN	39

HNTB

COMMONWEALTH OF PENNSYLVANIA
REGISTERED PROFESSIONAL
JUSTIN ROBERT MCCARTHY
ENGINEER
PE076998

PREPARED BY:
HNTB CORPORATION
4507 NORTH FRONT STREET
SUITE 300
HARRISBURG, PA 17110

COMMONWEALTH OF PENNSYLVANIA
DEPARTMENT OF TRANSPORTATION

DAUPHIN COUNTY
SR 0083 SECTION 079
SEG 0020 OFFSET 0291
SR 3013 (29TH STREET) STA 37+78.24 OVER
SR 0083 & NORFOLK SOUTHERN RAILWAY COMPANY
3-SPAN CONTINUOUS COMPOSITE PS CONCRETE
PA BULB-TEE BEAM BRIDGE
STAKE-OUT PLAN

RECOMMENDED 12-6-2022

S-39451

6/23/2022
FILENAME: 63016-s-brB1-sop01.dgn

DES: MCA | DES CKD: JRM | DWG: SMZ | DWG CKD: JRM

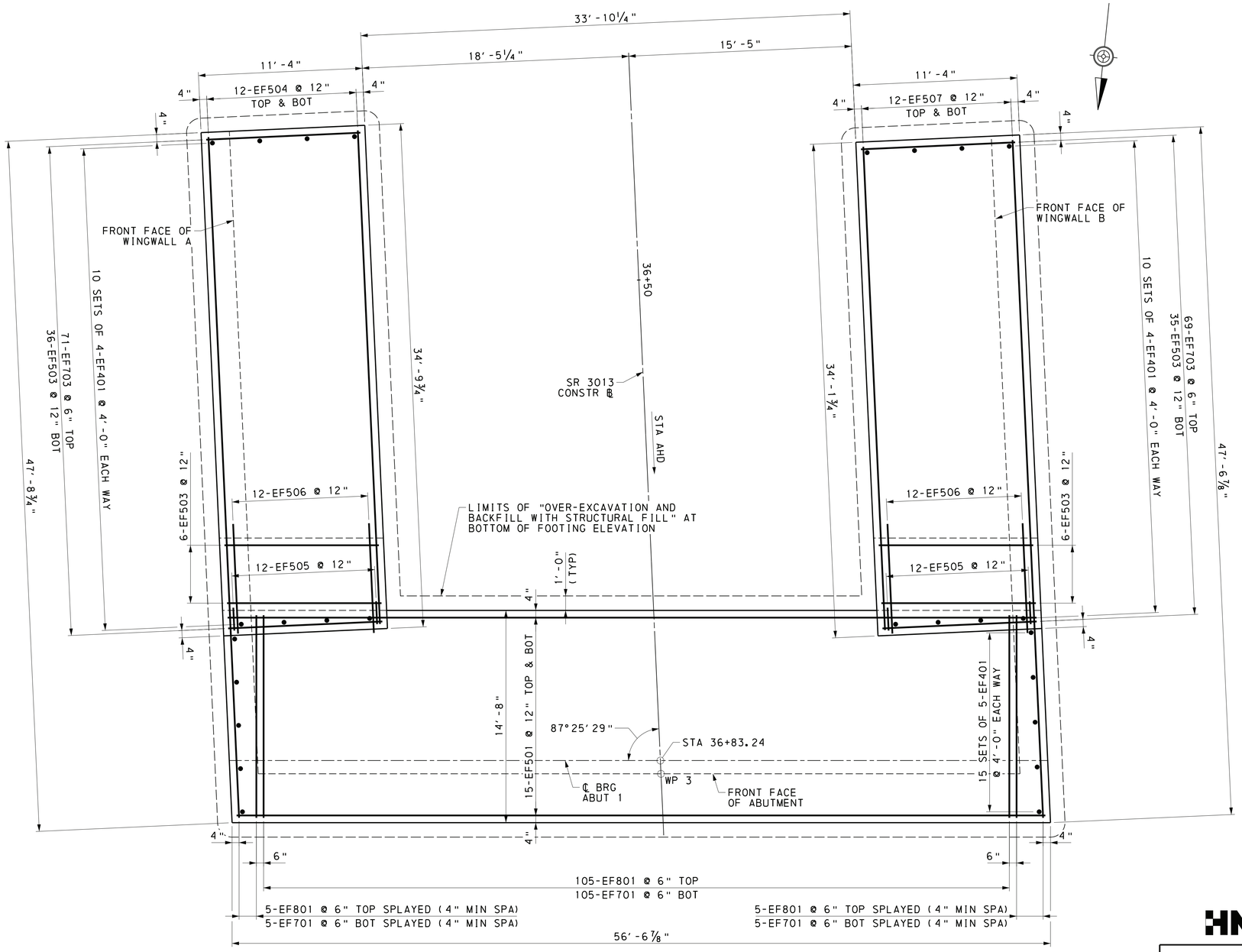

FOOTING PLAN

2 0 2 4 FEET

FOUNDATION PARAMETERS AT ABUTMENT 1		
BEARING CAPACITY	ABUTMENT 1	WINGWALL A & B
SECTION	TYPICAL	TYPICAL
BEARING RESISTANCE	20.75 KSF	21.22 KSF
MAX BEARING PRESSURE	9.55 KSF	7.94 KSF
PERFORMANCE RATIO	2.173	2.673
LIMIT STATE	STR-I	STR-I
LOAD CASE	MAX	MIN
STAGE	FINAL	FINAL
SLIDING CAPACITY	ABUTMENT 1	WINGWALL A & B
SECTION	TYPICAL	TYPICAL
SLIDING RESISTANCE	23.76 K	21.29 K
MAX HORIZONTAL FORCE	20.01 K	21.18 K
PERFORMANCE RATIO	1.187	1.005
LIMIT STATE	STR-I	STR-I
LOAD CASE	MIN	MIN
CONDITION	TEMPORARY	TEMPORARY

SPREAD FOOTING SOIL PARAMETERS	
ALLOWABLE SETTLEMENT	1.0 IN
BEARING CAPACITY PHI FACTOR	0.50
SLIDING PHI FACTOR	0.80
SOIL LAYER THICKNESS	8.2 FT*
MASS UNIT WEIGHT	120 PCF
SATURATED UNIT WEIGHT	125 PCF
ELASTIC MODULUS	1584 KSF
EFFECTIVE FRICTION ANGLE	34 DEG

*13.2 FT AT STEPPED WINGS

NOTES:

1. WORK POINTS ARE LOCATED AT THE FRONT FACE OF THE ARCHITECTURAL SURFACE TREATMENT.
2. EXCAVATE EXISTING MATERIAL BELOW BOTTOM OF FOOTING DOWN TO THE TOP OF ROCK. PLACE STRUCTURE BACKFILL UNDERNEATH FOOTING IN COMPACTED LIFTS UP TO THE BOTTOM OF FOOTING ELEVATION.

Mark	Description	By	Chk'd	Recm'd	Date
REVISIONS					

SR 3013 PREVIOUSLY KNOWN AS LR 22075
BMS STR ID: 22-3013-0020-0291 MPMS/ECMS PROJ: 97828 BRKEY: 67416

REFERENCES:	SHEETS:
GENERAL NOTES	4 & 5
STAKE-OUT PLAN	13
ABUTMENT 1 DRAWINGS	14 - 22

HNTB

COMMONWEALTH OF PENNSYLVANIA
REGISTERED PROFESSIONAL
JUSTIN ROBERT MCCARTHY
ENGINEER
PE076998

PREPARED BY:
HNTB CORPORATION
4507 NORTH FRONT STREET
SUITE 300
HARRISBURG, PA 17110

COMMONWEALTH OF PENNSYLVANIA
DEPARTMENT OF TRANSPORTATION

DAUPHIN COUNTY
SR 0083 SECTION 079
SEG 0020 OFFSET 0291
SR 3013 (29TH STREET) STA 37+78.24 OVER
SR 0083 & NORFOLK SOUTHERN RAILWAY COMPANY
3-SPAN CONTINUOUS COMPOSITE PS CONCRETE
PA BULB-TEE BEAM BRIDGE
ABUTMENT 1 FOOTING PLAN

RECOMMENDED 12-6-2022

SHEET 14 OF 93

S-39451

6/23/2022
FILENAME: 63016-s-brB1-ab111.dgn

DES: SMZ	DES CKD: CEK	DWG: SMZ	DWG CKD: CEK

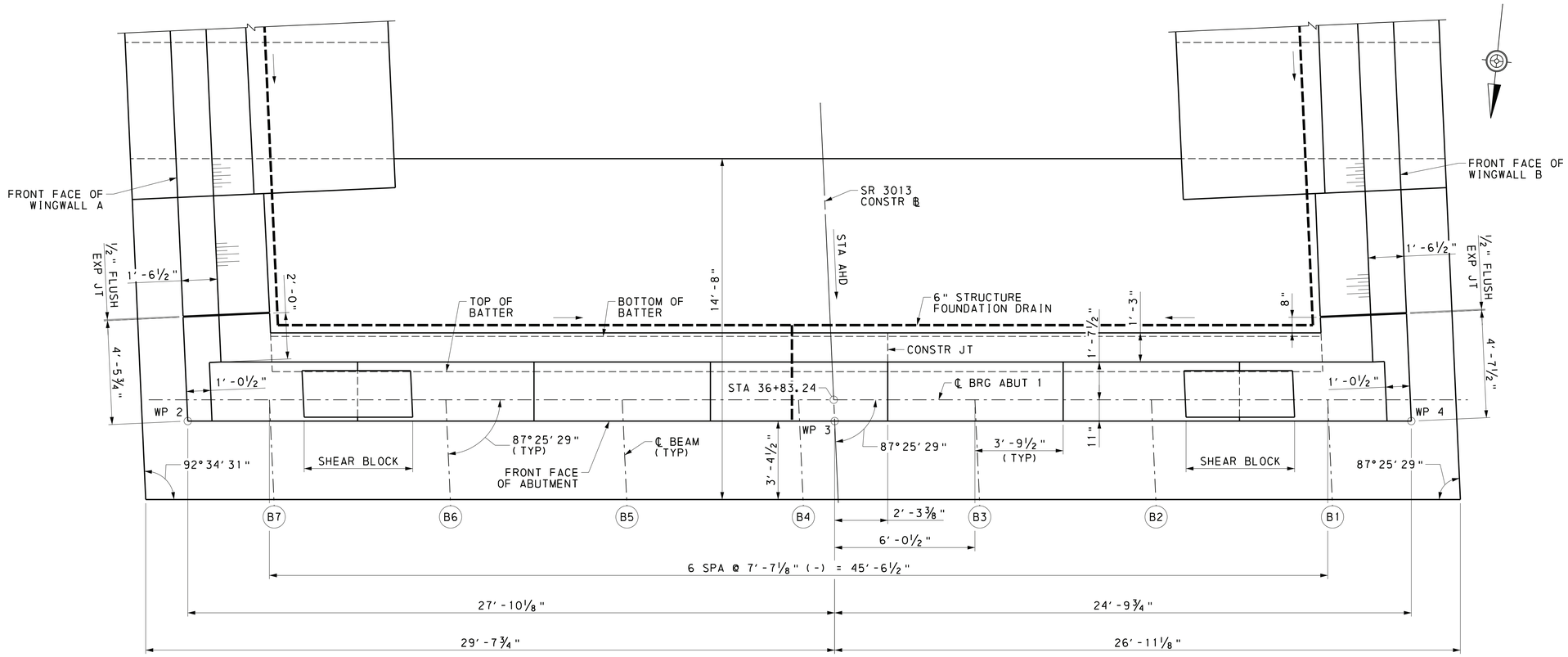

PLAN

1 0 1 2 3 FEET

Mark	Description	By	Chk'd	Recm'd	Date
REVISIONS					

SR 3013 PREVIOUSLY KNOWN AS LR 22075
BMS STR ID: 22-3013-0020-0291 MPMS/ECMS PROJ: 97828 BRKEY: 67416

NOTES:

1. WORK POINTS ARE LOCATED AT THE FRONT FACE OF THE ARCHITECTURAL SURFACE TREATMENT.
2. STANDPIPE AND SUPPORT BRACKETS NOT SHOWN FOR CLARITY.

REFERENCES:	SHEETS:
GENERAL NOTES	4 & 5
STAKE-OUT PLAN	13
ABUTMENT 1 DRAWINGS	14 - 22
STANDPIPE DETAILS	85

HNTB

COMMONWEALTH OF PENNSYLVANIA REGISTERED PROFESSIONAL JUSTIN ROBERT MCCARTHY ENGINEER PE076998

PREPARED BY:
HNTB CORPORATION
4507 NORTH FRONT STREET
SUITE 300
HARRISBURG, PA 17110

COMMONWEALTH OF PENNSYLVANIA
DEPARTMENT OF TRANSPORTATION

DAUPHIN COUNTY
SR 0083 SECTION 079
SEG 0020 OFFSET 0291
SR 3013 (29TH STREET) STA 37+78.24 OVER
SR 0083 & NORFOLK SOUTHERN RAILWAY COMPANY
3-SPAN CONTINUOUS COMPOSITE PS CONCRETE
PA BULB-TEE BEAM BRIDGE
ABUTMENT 1 PLAN

RECOMMENDED 12-6-2022

SHEET 15 OF 93

S-39451

6/23/2022
FILENAME 63016-s-brB1-ab112.dgn

DES: SMZ	DES CKD: CEK	DWG: SMZ	DWG CKD: CEK

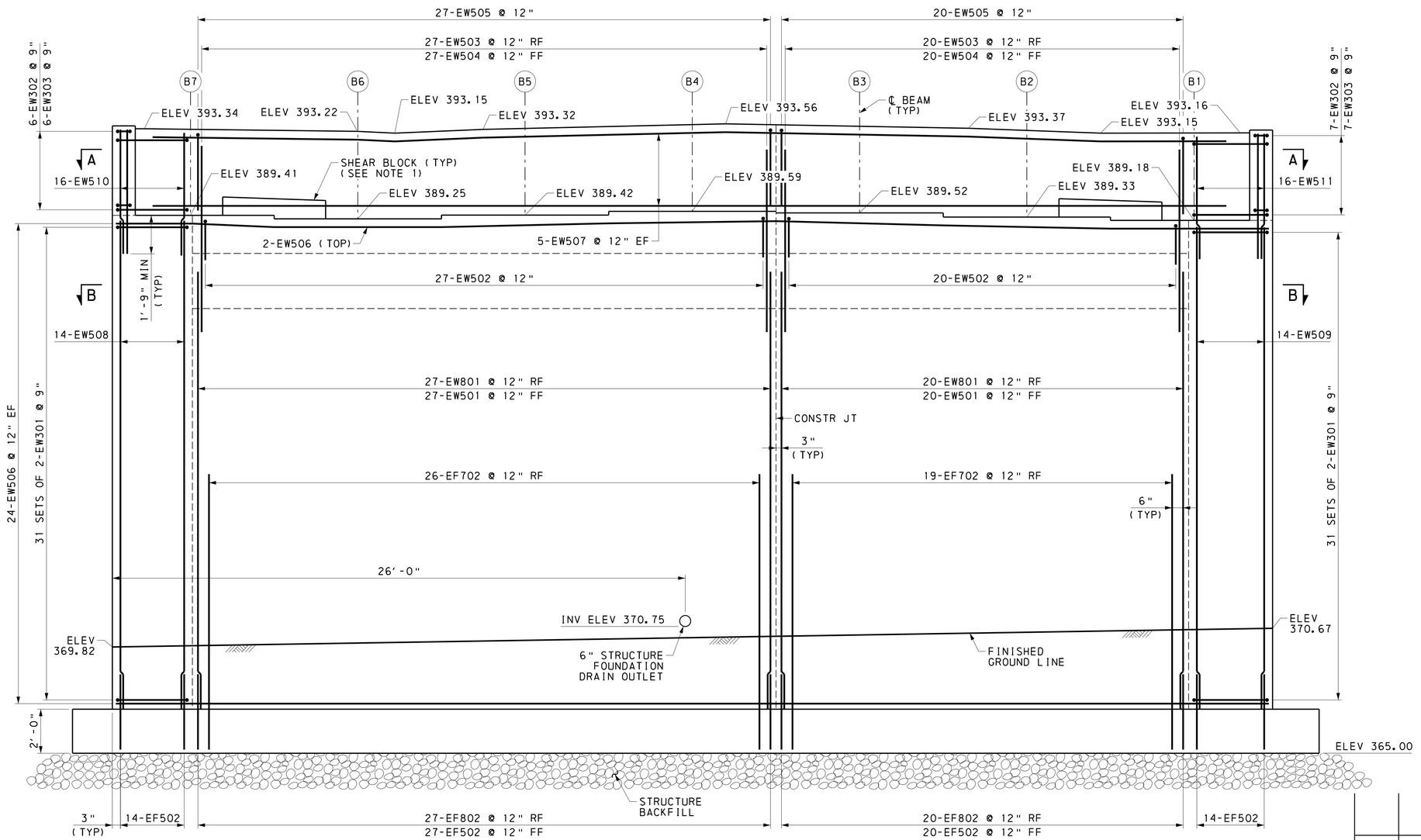

ELEVATION

1 0 1 2 3 FEET

Mark	Description	By	Chk'd	Recm'd	Date

REVISIONS

SR 3013 PREVIOUSLY KNOWN AS LR 22075
BMS STR ID: 22-3013-0020-0291 MPMS/ECMS PROJ: 97828 BRKEY: 67416

NOTES:

1. SHEAR BLOCK REINFORCEMENT NOT SHOWN FOR CLARITY.
2. BACKWALL ELEVATIONS GIVEN AT LOCATIONS OF SUPERSTRUCTURE BREAK POINTS.

REFERENCES:	SHEETS:
GENERAL NOTES	4 & 5
ABUTMENT 1 DRAWINGS	14 - 22
MISCELLANEOUS ABUTMENT DETAILS	32
ABUTMENT ARCHITECTURAL DETAILS	33

HNTB

COMMONWEALTH OF PENNSYLVANIA
REGISTERED PROFESSIONAL
JUSTIN ROBERT MCCARTHY
ENGINEER
PE076998

PREPARED BY:
HNTB CORPORATION
4507 NORTH FRONT STREET
SUITE 300
HARRISBURG, PA 17110

COMMONWEALTH OF PENNSYLVANIA
DEPARTMENT OF TRANSPORTATION

DAUPHIN COUNTY
SR 0083 SECTION 079
SEG 0020 OFFSET 0291
SR 3013 (29TH STREET) STA 37+78.24 OVER
SR 0083 & NORFOLK SOUTHERN RAILWAY COMPANY
3-SPAN CONTINUOUS COMPOSITE PS CONCRETE
PA BULB-TEE BEAM BRIDGE
ABUTMENT 1 ELEVATION

RECOMMENDED 12-6-2022

SHEET 16 OF 93

S-39451

6/23/2022
FILENAME: 63016-s-br01-ab113.dgn

DES: SMZ	DES CKD: CEK	DWG: SMZ	DWG CKD: CEK

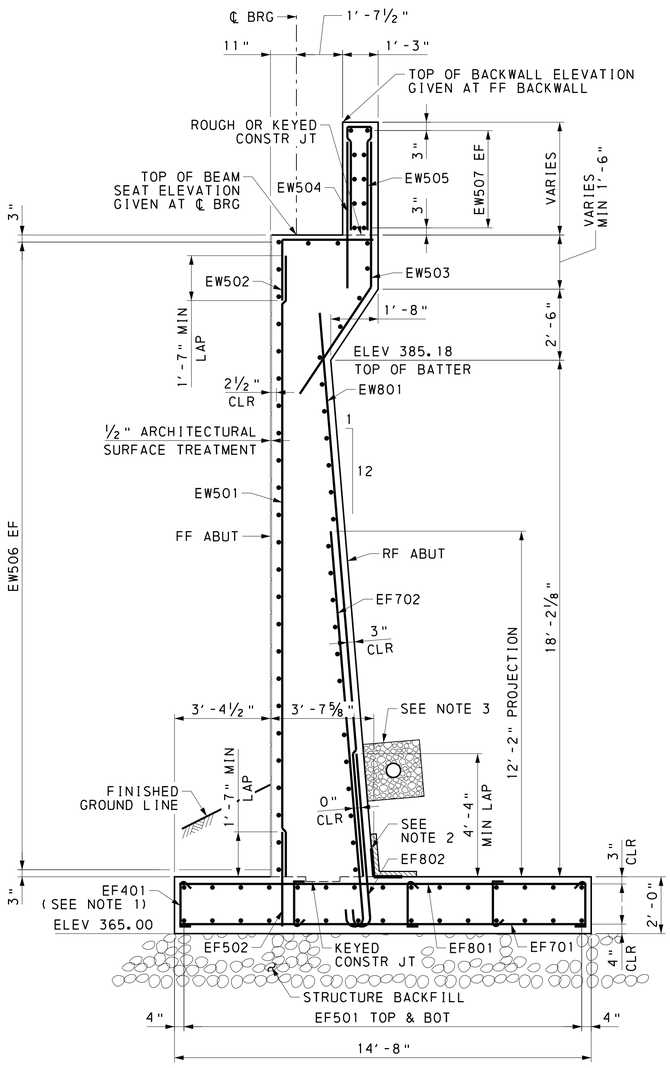

TYPICAL SECTION

1 0 1 2 3 FEET

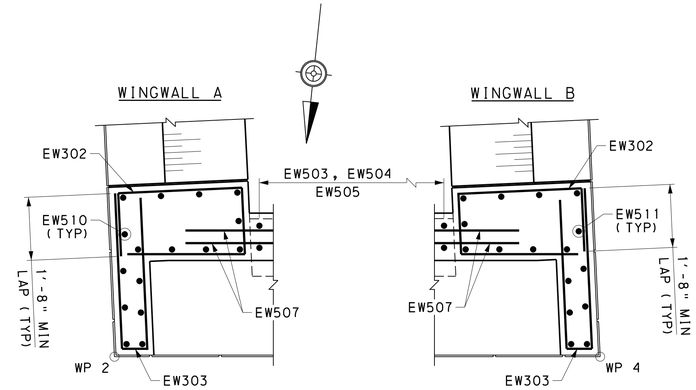

SECTION A-A

1 0 1 2 FEET

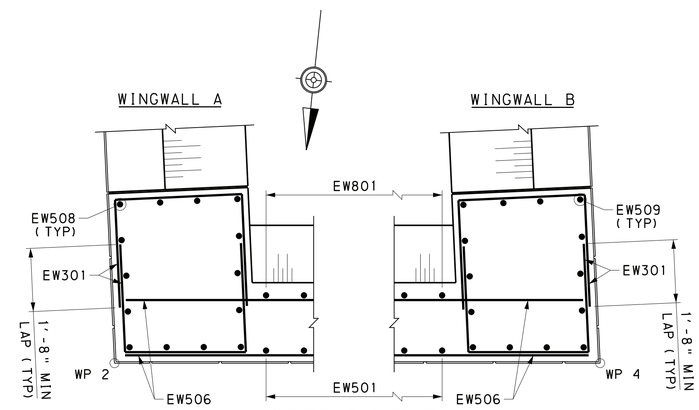

SECTION B-B

1 0 1 2 FEET

Mark	Description	By	Chk'd	Recm'd	Date

REVISIONS

SR 3013 PREVIOUSLY KNOWN AS LR 22075
BMS STR ID: 22-3013-0020-0291 MPMS/ECMS PROJ: 97828 BRKEY: 67416

NOTES:

1. TIE TOP & BOTTOM MATS OF REINFORCING STEEL WITH #4 TIE BARS AT A MAXIMUM SPACING OF 4'-0" IN BOTH DIRECTIONS. PROVIDE TIE BARS WITH 90° HOOK AT ONE END AND 135° HOOK AT THE OTHER END. ALTERNATE 90° AND 135° HOOKS AT TOP IN ALTERNATE TIES.
2. FOR WATERPROOFING DETAILS, SEE ATTACHMENT BC-788 MODIFIED "SPRAY-ON WATERPROOFING DETAILS".
3. 6" STRUCTURE FOUNDATION DRAIN WITHIN CONTINUOUS 2' x 2' OF NO. 57 COARSE AGGREGATE ENCASED IN GEOTEXTILE, CLASS 1. SEE PUB 408 SECTION 1001.3(d) AND BC-751M.

REFERENCES:	SHEETS:
GENERAL NOTES	4 & 5
ABUTMENT 1 DRAWINGS	14 - 22
MISCELLANEOUS ABUTMENT DETAILS	32
ABUTMENT ARCHITECTURAL DETAILS	33

HNTB

COMMONWEALTH OF PENNSYLVANIA REGISTERED PROFESSIONAL ENGINEER JUSTIN ROBERT MCCARTHY PE076998

PREPARED BY:
HNTB CORPORATION
4507 NORTH FRONT STREET
SUITE 300
HARRISBURG, PA 17110

COMMONWEALTH OF PENNSYLVANIA
DEPARTMENT OF TRANSPORTATION

DAUPHIN COUNTY
SR 0083 SECTION 079
SEG 0020 OFFSET 0291
SR 3013 (29TH STREET) STA 37+78.24 OVER
SR 0083 & NORFOLK SOUTHERN RAILWAY COMPANY

3-SPAN CONTINUOUS COMPOSITE PS CONCRETE
PA BULB-TEE BEAM BRIDGE

ABUTMENT 1 SECTION & DETAILS

RECOMMENDED 12-6-2022

SHEET 17 OF 93

S-39451

12/2/2022
FILENAME 63016-s-brB1-ab114.dgn

DES: SMZ | DES CKD: CEK | DWG: SMZ | DWG CKD: CEK

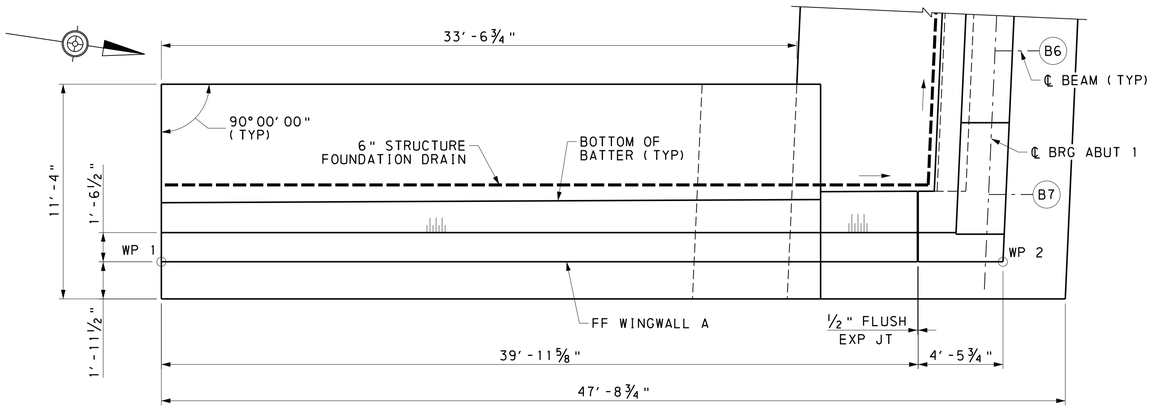

PLAN

2 0 2 4 FEET

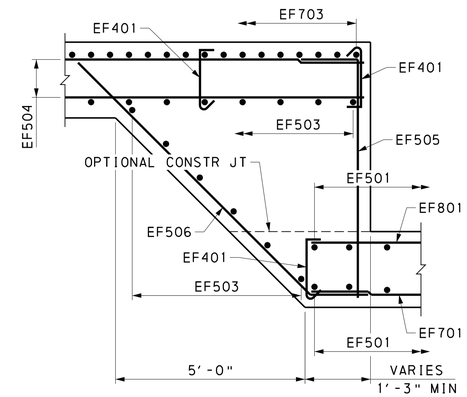

STEP DETAIL

1 0 1 2 FEET

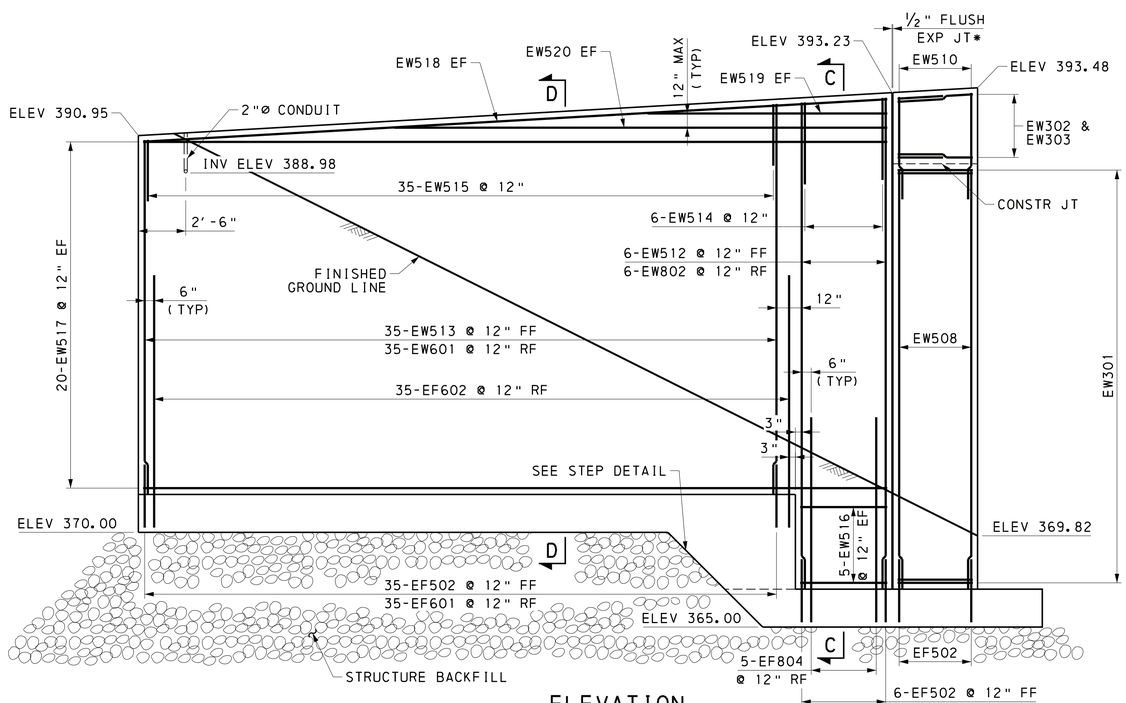

ELEVATION

2 0 2 4 FEET

* FOR WATERPROOFING DETAILS, SEE ATTACHMENT BC-788 MODIFIED "SPRAY-ON WATERPROOFING DETAILS".

REFERENCES:	SHEETS:
GENERAL NOTES	4 & 5
ABUTMENT 1 DRAWINGS	14 - 22
ABUTMENT ARCHITECTURAL DETAILS	33

Mark	Description	By	Chk'd	Recm'd	Date
REVISIONS					

SR 3013 PREVIOUSLY KNOWN AS LR 22075
BMS STR ID: 22-3013-0020-0291 MPMS/ECMS PROJ: 97828 BRKEY: 67416

HNTB

COMMONWEALTH OF PENNSYLVANIA
DEPARTMENT OF TRANSPORTATION

DAUPHIN COUNTY
SR 0083 SECTION 079
SEG 0020 OFFSET 0291
SR 3013 (29TH STREET) STA 37+78.24 OVER
SR 0083 & NORFOLK SOUTHERN RAILWAY COMPANY

3-SPAN CONTINUOUS COMPOSITE PS CONCRETE
PA BULB-TEE BEAM BRIDGE

WINGWALL A PLAN & ELEVATION

COMMONWEALTH OF PENNSYLVANIA
REGISTERED PROFESSIONAL
JUSTIN ROBERT MCCARTHY
ENGINEER
PE076998

PREPARED BY:
HNTB CORPORATION
4507 NORTH FRONT STREET
SUITE 300
HARRISBURG, PA 17110

RECOMMENDED 12-6-2022

SHEET 18 OF 93

S-39451

12/2/2022
FILENAME: 63016-s-br81-ab115.dgn

DES: SMZ	DES CKD: CEK	DWG: SMZ	DWG CKD: CEK

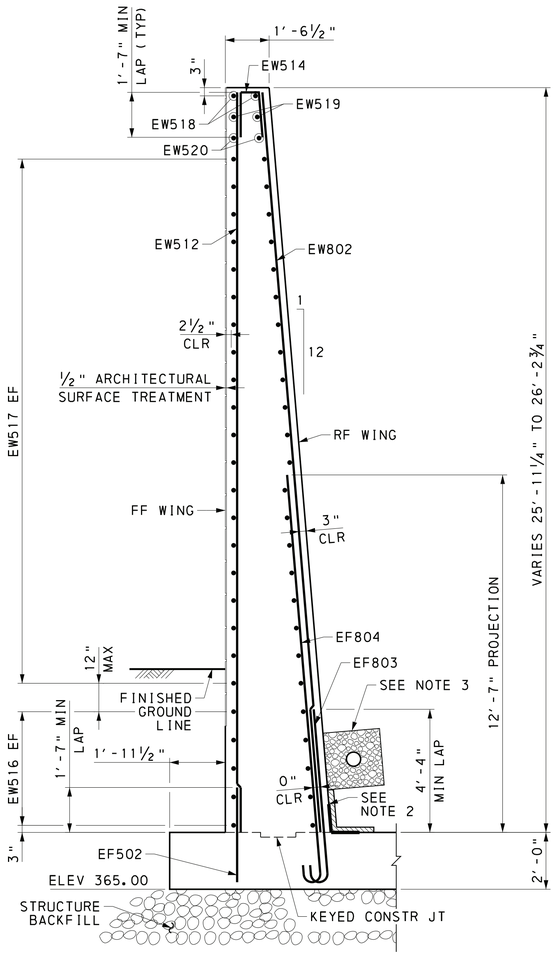

(ABUTMENT FOOTING REINFORCEMENT NOT SHOWN FOR CLARITY)

SECTION C-C

1 0 1 2 3 FEET

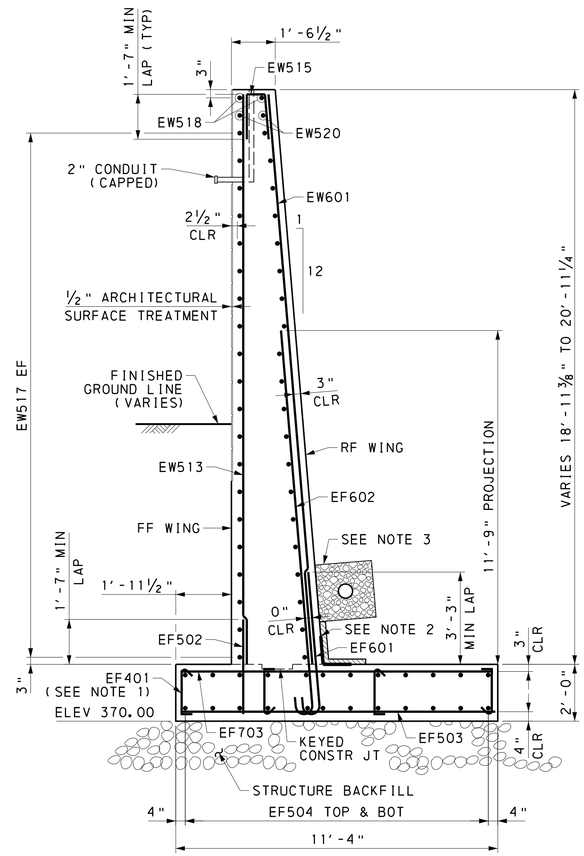

SECTION D-D

1 0 1 2 3 FEET

NOTES:

1. TIE TOP & BOTTOM MATS OF REINFORCING STEEL WITH #4 TIE BARS AT A MAXIMUM SPACING OF 4'-0" IN BOTH DIRECTIONS. PROVIDE TIE BARS WITH 90° HOOK AT ONE END AND 135° HOOK AT THE OTHER END. ALTERNATE 90° AND 135° HOOKS AT TOP IN ALTERNATE TIES.
2. FOR WATERPROOFING DETAILS, SEE ATTACHMENT BC-788 MODIFIED "SPRAY-ON WATERPROOFING DETAILS".
3. 6" STRUCTURE FOUNDATION DRAIN WITHIN CONTINUOUS 2' x 2' OF NO. 57 COARSE AGGREGATE ENCASED IN GEOTEXTILE, CLASS 1. SEE PUB 408 SECTION 1001.3(d) AND BC-751M.

REFERENCES:	SHEETS:
GENERAL NOTES	4 & 5
ABUTMENT 1 DRAWINGS	14 - 22
ABUTMENT ARCHITECTURAL DETAILS	33

Mark	Description	By	Chk'd	Recm'd	Date
REVISIONS					

SR 3013 PREVIOUSLY KNOWN AS LR 22075
BMS STR ID: 22-3013-0020-0291 MPMS/ECMS PROJ: 97828 BRKEY: 67416

HNTB

COMMONWEALTH OF PENNSYLVANIA
DEPARTMENT OF TRANSPORTATION

DAUPHIN COUNTY
SR 0083 SECTION 079
SEG 0020 OFFSET 0291
SR 3013 (29TH STREET) STA 37+78.24 OVER
SR 0083 & NORFOLK SOUTHERN RAILWAY COMPANY

3-SPAN CONTINUOUS COMPOSITE PS CONCRETE
PA BULB-TEE BEAM BRIDGE
WINGWALL A SECTIONS

COMMONWEALTH OF PENNSYLVANIA
REGISTERED PROFESSIONAL
JUSTIN ROBERT MCCARTHY
ENGINEER
PE076998

PREPARED BY:
HNTB CORPORATION
4507 NORTH FRONT STREET
SUITE 300
HARRISBURG, PA 17110

RECOMMENDED 12-6-2022

SHEET 19 OF 93

S-39451

12/2/2022
FILENAME: 63016-s-brB1-ab116.dgn

DES: SMZ	DES CKD: CEK	DWG: SMZ	DWG CKD: CEK

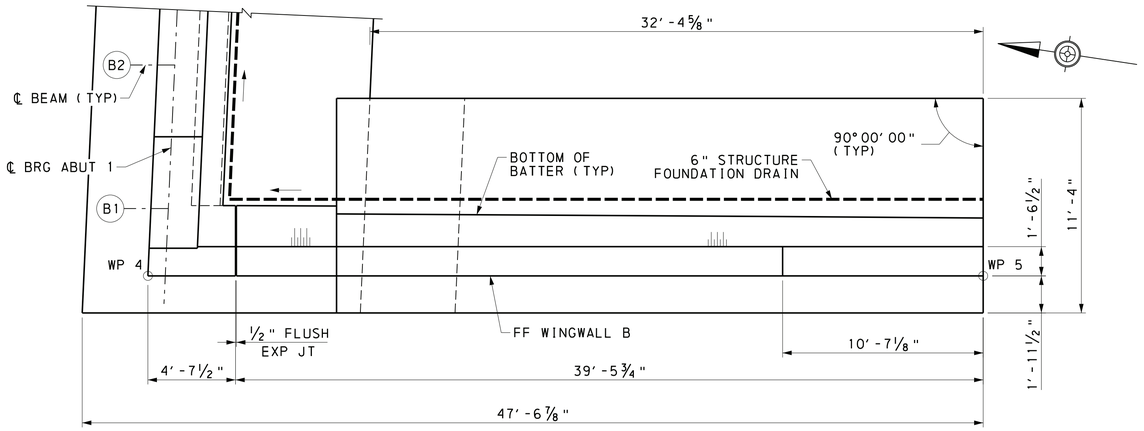

PLAN

2 0 2 4 FEET

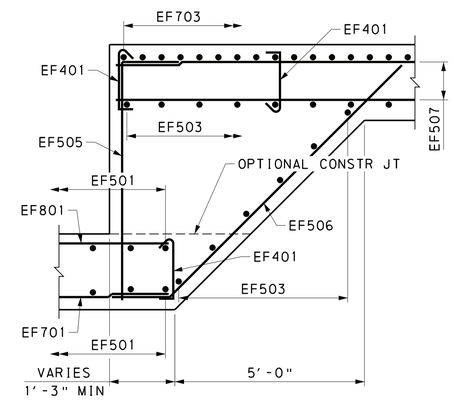

STEP DETAIL

1 0 1 2 FEET

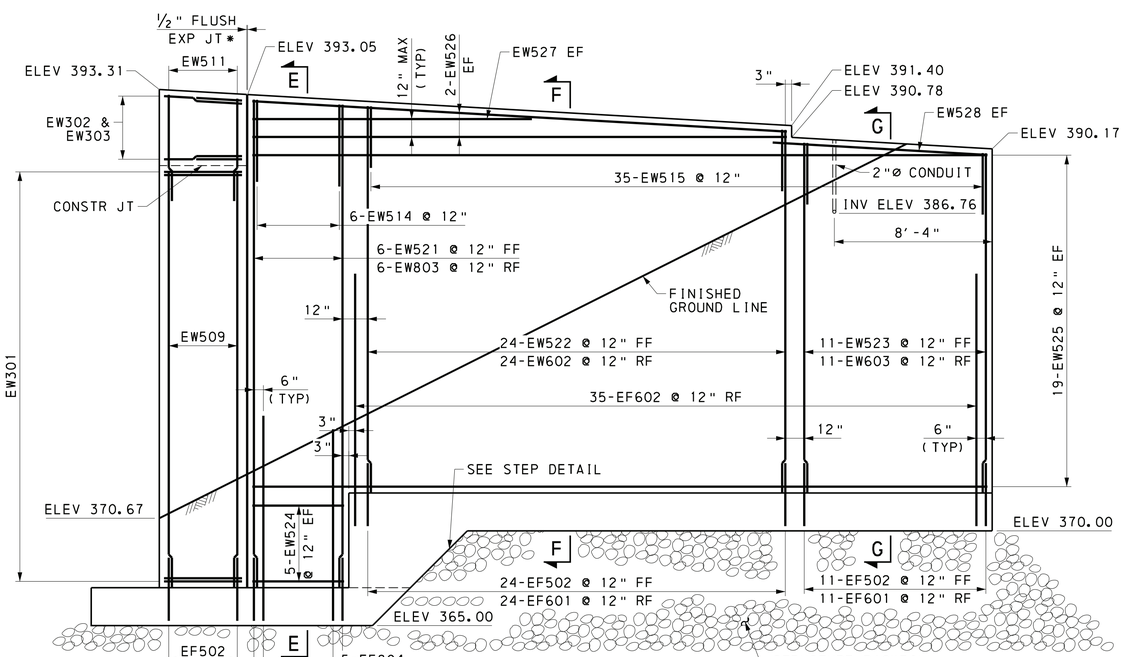

ELEVATION

2 0 2 4 FEET

* FOR WATERPROOFING DETAILS, SEE ATTACHMENT BC-788 MODIFIED "SPRAY-ON WATERPROOFING DETAILS".

NOTES:

1. STANDPIPE AND SUPPORT BRACKETS NOT SHOWN FOR CLARITY.

Mark	Description	By	Chk'd	Recm'd	Date

REVISIONS

SR 3013 PREVIOUSLY KNOWN AS LR 22075
BMS STR ID: 22-3013-0020-0291 MPMS/ECMS PROJ: 97828 BRKEY: 67416

REFERENCES:	SHEETS:
GENERAL NOTES	4 & 5
ABUTMENT 1 DRAWINGS	14 - 22
ABUTMENT ARCHITECTURAL DETAILS	33
STANDPIPE DETAILS	85

HNTB

COMMONWEALTH OF PENNSYLVANIA
DEPARTMENT OF TRANSPORTATION

DAUPHIN COUNTY
SR 0083 SECTION 079
SEG 0020 OFFSET 0291
SR 3013 (29TH STREET) STA 37+78.24 OVER
SR 0083 & NORFOLK SOUTHERN RAILWAY COMPANY
3-SPAN CONTINUOUS COMPOSITE PS CONCRETE
PA BULB-TEE BEAM BRIDGE
WINGWALL B PLAN & ELEVATION

COMMONWEALTH OF PENNSYLVANIA
REGISTERED PROFESSIONAL
JUSTIN ROBERT MCCARTHY
ENGINEER
PE076998

PREPARED BY:
HNTB CORPORATION
4507 NORTH FRONT STREET
SUITE 300
HARRISBURG, PA 17110

RECOMMENDED 12-6-2022

SHEET 20 OF 93

S-39451

12/2/2022
FILENAME: 63016-s-br81-ab117.dgn

DES: SMZ	DES CKD: CEK	DWG: SMZ	DWG CKD: CEK

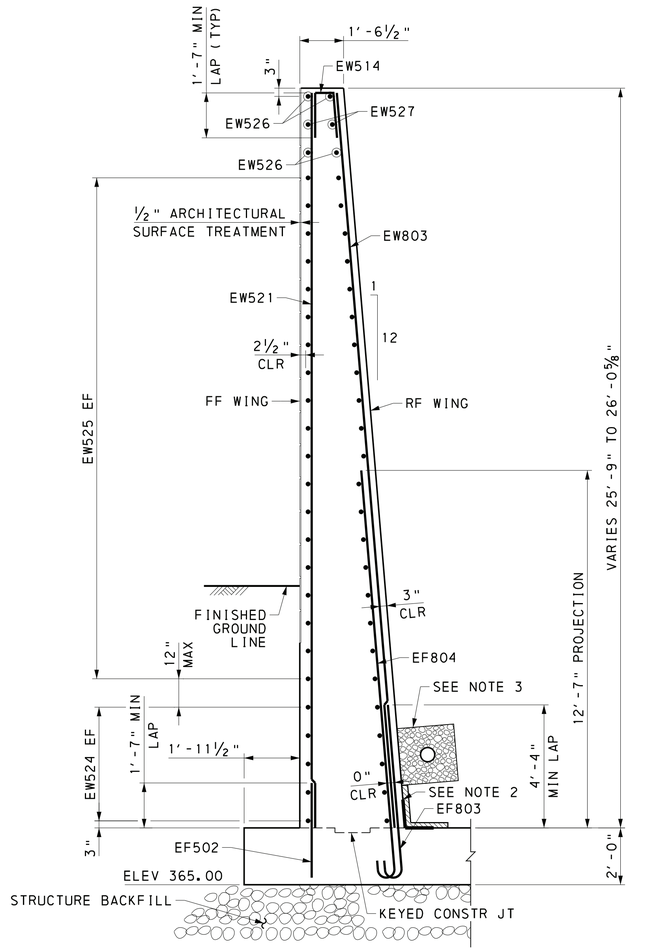

(ABUTMENT FOOTING REINFORCEMENT NOT SHOWN FOR CLARITY)

SECTION E-E

1 0 1 2 3 FEET

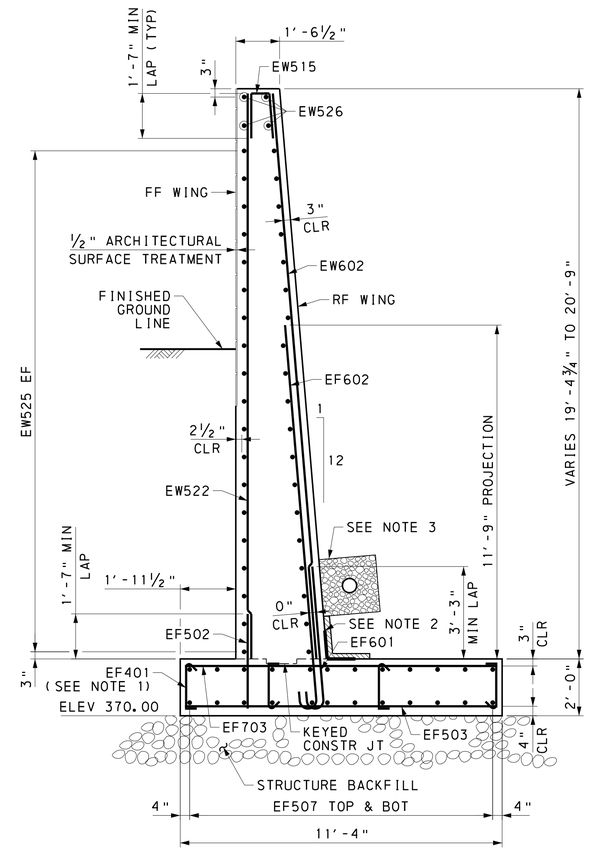

SECTION F-F

1 0 1 2 3 FEET

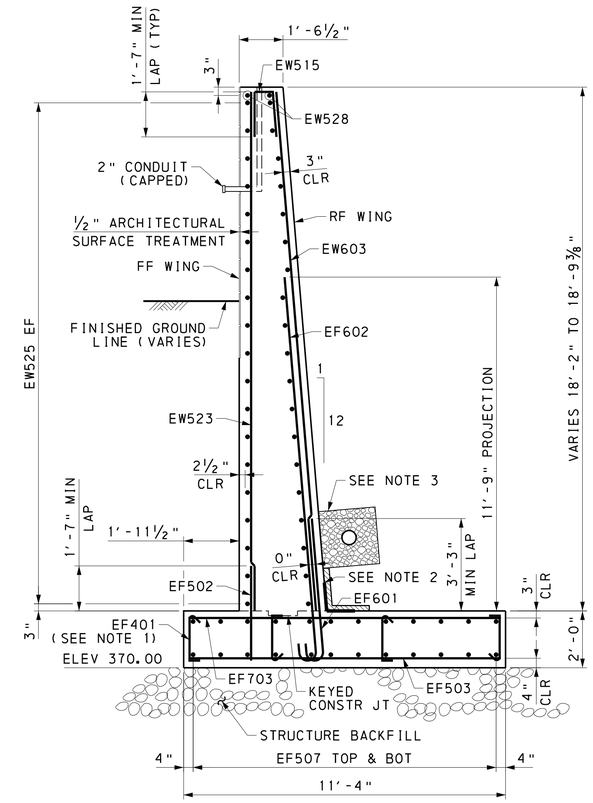

SECTION G-G

1 0 1 2 3 FEET

Mark	Description	By	Chk'd	Recm'd	Date

REVISIONS

SR 3013 PREVIOUSLY KNOWN AS LR 22075
BMS STR ID: 22-3013-0020-0291 MPMS/ECMS PROJ: 97828 BRKEY: 67416

NOTES:

1. TIE TOP & BOTTOM MATS OF REINFORCING STEEL WITH #4 TIE BARS AT A MAXIMUM SPACING OF 4'-0" IN BOTH DIRECTIONS. PROVIDE TIE BARS WITH 90° HOOK AT ONE END AND 135° HOOK AT THE OTHER END. ALTERNATE 90° AND 135° HOOKS AT TOP IN ALTERNATE TIES.
2. FOR WATERPROOFING DETAILS, SEE ATTACHMENT BC-788 MODIFIED "SPRAY-ON WATERPROOFING DETAILS".
3. 6" STRUCTURE FOUNDATION DRAIN WITHIN CONTINUOUS 2' x 2' OF NO. 57 COARSE AGGREGATE ENCASED IN GEOTEXTILE, CLASS 1. SEE PUB 408 SECTION 1001.3(d) AND BC-751M.

REFERENCES:	SHEETS:
GENERAL NOTES	4 & 5
ABUTMENT 1 DRAWINGS	14 - 22
ABUTMENT ARCHITECTURAL DETAILS	33

HNTB

COMMONWEALTH OF PENNSYLVANIA REGISTERED PROFESSIONAL JUSTIN ROBERT MCCARTHY ENGINEER PE076998

PREPARED BY:
HNTB CORPORATION
4507 NORTH FRONT STREET
SUITE 300
HARRISBURG, PA 17110

COMMONWEALTH OF PENNSYLVANIA
DEPARTMENT OF TRANSPORTATION

DAUPHIN COUNTY
SR 0083 SECTION 079
SEG 0020 OFFSET 0291
SR 3013 (29TH STREET) STA 37+78.24 OVER
SR 0083 & NORFOLK SOUTHERN RAILWAY COMPANY

3-SPAN CONTINUOUS COMPOSITE PS CONCRETE
PA BULB-TEE BEAM BRIDGE
WINGWALL B SECTIONS

RECOMMENDED 12-6-2022

S-39451

12/2/2022
FILENAME: 63016-s-brB1-ab118.dgn

DES: SMZ	DES CKD: CEK	DWG: SMZ	DWG CKD: CEK

BRIDGE 1

MARK	SIZE	NO REQ'D	LENGTH	TYPE	A	B	C	D	E	REMARKS
ABUTMENT 1										
EF401	4	75	2'-2"	63	4 1/2"	1'-5"	4 1/2"			
EF501	5	30	56'-2 3/4"	STR						
EF502	5	75	3'-4	STR						
EF701	7	115	14'-4"	STR						
EF702	7	45	14'-9"	65	10"	13'-11"				J = 7"
EF801	8	115	14'-4"	STR						
EF802	8	47	7'-0"	65	11"	6'-1"				J = 8"
EW301	3	124	9'-9"	STR						BEND IN FIELD
EW302	3	13	9'-10"	STR						BEND IN FIELD
EW303	3	13	8'-8"	STR						BEND IN FIELD
EW401	4	8	3'-6"	STR						
EW501	5	47	22'-0"	STR						
EW502	5	47	5'-5"	77	3'-4"	2'-1"				
EW503	5	47	8'-8"	78	4'-7"	4'-1"	2'-3 1/4"			
EW504	5	47	4'-5"	STR						
EW505	5	47	8'-0"	31	3'-7"	10"	3'-7"			
EW506	5	50	52'-3"	STR						
EW507	5	10	48'-6"	STR						
EW508	5	14	22'-2"	STR						
EW509	5	14	22'-0"	STR						
EW510	5	16	5'-9"	STR						
EW511	5	16	5'-10"	STR						
EW801	8	47	19'-3"	STR						
WINGWALL A										
EF401	4	40	2'-2"	63	4 1/2"	1'-5"	4 1/2"			
EF502	5	41	3'-4"	STR						
EF503	5	42	11'-0"	STR						
EF504	5	24	34'-5 3/4"	STR						
EF505	5	12	8'-0"	77	6'-4"	1'-8"				
EF506	5	12	10'-6"	78	8'-10"	1'-8"	1'-2"			
EF601	6	35	5'-8"	65	8"	5'-0"				J = 6"
EF602	6	35	14'-2"	65	8"	13'-6"				J = 6"
EF703	7	71	11'-0"	STR						
EF803	8	6	7'-0"	65	11"	6'-1"				J = 8"
EF804	8	5	15'-3"	65	11"	14'-4"				J = 8"
EW512	5	6	25'-9" TO	STR						VARY EACH BY 5/8"
			26'-0"							
EW513	5	35	18'-9" TO	STR						VARY EACH BY 3/4"
			20'-9"							
EW514	5	6	4'-4"	33	1'-8"	1'-0"	1'-8"		1 5/8"	
EW515	5	35	4'-4"	33	1'-8"	1'-0"	1'-8"		1 5/8"	
EW516	5	10	4'-9"	STR						
EW517	5	40	39'-7"	STR						
EW518	5	2	39'-8"	STR						
EW519	5	2	13'-3"	STR						
EW520	5	2	26'-5"	STR						
EW601	6	35	18'-9" TO	STR						VARY EACH BY 3/4"
			20'-9"							
EW802	8	6	25'-9" TO	STR						VARY EACH BY 5/8"
			26'-0"							

MARK	SIZE	NO REQ'D	LENGTH	TYPE	A	B	C	D	E	REMARKS
WINGWALL B										
EF401	4	40	2'-2"	63	4 1/2"	1'-5"	4 1/2"			
EF502	5	41	3'-4"	STR						
EF503	5	41	11'-0"	STR						
EF505	5	12	8'-0"	77	6'-4"	1'-8"				
EF506	5	12	10'-6"	78	8'-10"	1'-8"	1'-2"			
EF507	5	24	33'-9 3/4"	STR						
EF601	6	35	5'-8"	65	8"	5'-0"				J = 6"
EF602	6	35	14'-2"	65	8"	13'-6"				J = 6"
EF703	7	69	11'-0"	STR						
EF803	8	6	7'-0"	65	11"	6'-1"				J = 8"
EF804	8	5	15'-3"	65	11"	14'-4"				J = 8"
EW514	5	6	4'-4"	33	1'-8"	1'-0"	1'-8"		1 5/8"	
EW515	5	35	4'-4"	33	1'-8"	1'-0"	1'-8"		1 5/8"	
EW521	5	6	25'-6" TO	STR						VARY EACH BY 3/4"
			25'-10"							
EW522	5	24	19'-2" TO	STR						VARY EACH BY 3/4"
			20'-6"							
EW523	5	11	18'-0" TO	STR						VARY EACH BY 3/4"
			18'-7"							
EW524	5	10	4'-11"	STR						
EW525	5	38	39'-1"	STR						
EW526	5	4	28'-6"	STR						
EW527	5	2	17'-6"	STR						
EW528	5	2	11'-4"	STR						
EW602	6	24	19'-2" TO	STR						VARY EACH BY 3/4"
			20'-6"							
EW603	6	11	18'-0" TO	STR						VARY EACH BY 3/4"
			18'-7"							
EW803	8	6	25'-6" TO	STR						VARY EACH BY 3/4"
			25'-10"							
SHEAR BLOCKS										
EW596	5	12	6'-8"	31	2'-6"	1'-8"	2'-6"			
EW597	5	6	9'-0"	42	2'-4"	4'-4"	2'-4"			H = 2"

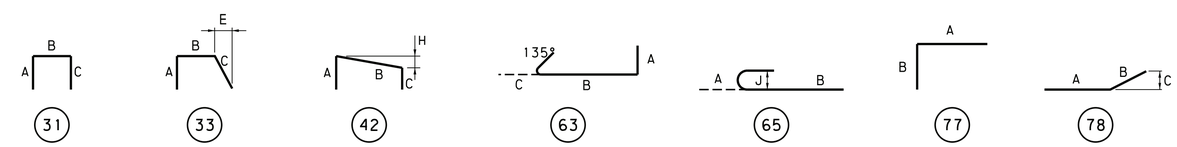

Mark	Description	By	Chk'd	Recm'd	Date
REVISIONS					

SR 3013 PREVIOUSLY KNOWN AS LR 22075
BMS STR ID: 22-3013-0020-0291 MPMS/ECMS PROJ: 97828 BRKEY: 67416

NOTES:

1. "E" PREFIX IN BAR MARK DENOTES EPOXY COATED BARS.
2. ALL DIMENSIONS ARE OUT TO OUT OF BAR EXCEPT "A" & "C" ON STANDARD 135° AND 180° HOOKS, UNLESS NOTED.
3. FOR REINFORCEMENT BAR FABRICATION DETAILS, REFER TO STANDARD DRAWING BC-736M.
4. FIGURES IN CIRCLE REPRESENT BAR TYPES.
5. "J" DIMENSIONS ON 180° HOOKS ARE SHOWN ONLY WHERE NECESSARY TO RESTRICT HOOK SIZE, OTHERWISE STANDARD HOOKS ARE TO BE USED.
6. RADIUS, "R" IS TO THE INSIDE OF THE BAR.
7. REINFORCEMENT BAR SCHEDULE IS FOR INFORMATION ONLY. VERIFY INFORMATION BEFORE FABRICATION.

REFERENCES:	SHEETS:
GENERAL NOTES	4 & 5
ABUTMENT 1 DRAWINGS	14 - 22

HNTB

COMMONWEALTH OF PENNSYLVANIA
REGISTERED PROFESSIONAL
JUSTIN ROBERT MCCARTHY
ENGINEER
PE076998

PREPARED BY:
HNTB CORPORATION
4507 NORTH FRONT STREET
SUITE 300
HARRISBURG, PA 17110

COMMONWEALTH OF PENNSYLVANIA
DEPARTMENT OF TRANSPORTATION

DAUPHIN COUNTY
SR 0083 SECTION 079
SEG 0020 OFFSET 0291
SR 3013 (29TH STREET) STA 37+78.24 OVER
SR 0083 & NORFOLK SOUTHERN RAILWAY COMPANY

3-SPAN CONTINUOUS COMPOSITE PS CONCRETE
PA BULB-TEE BEAM BRIDGE

ABUTMENT 1 REBAR SCHEDULE

RECOMMENDED 12-6-2022

S-39451

DES: SMZ | DES CKD: CEK | DWG: SMZ | DWG CKD: CEK

6/23/2022
FILENAME: 63016-s-brB1-bar01.dgn

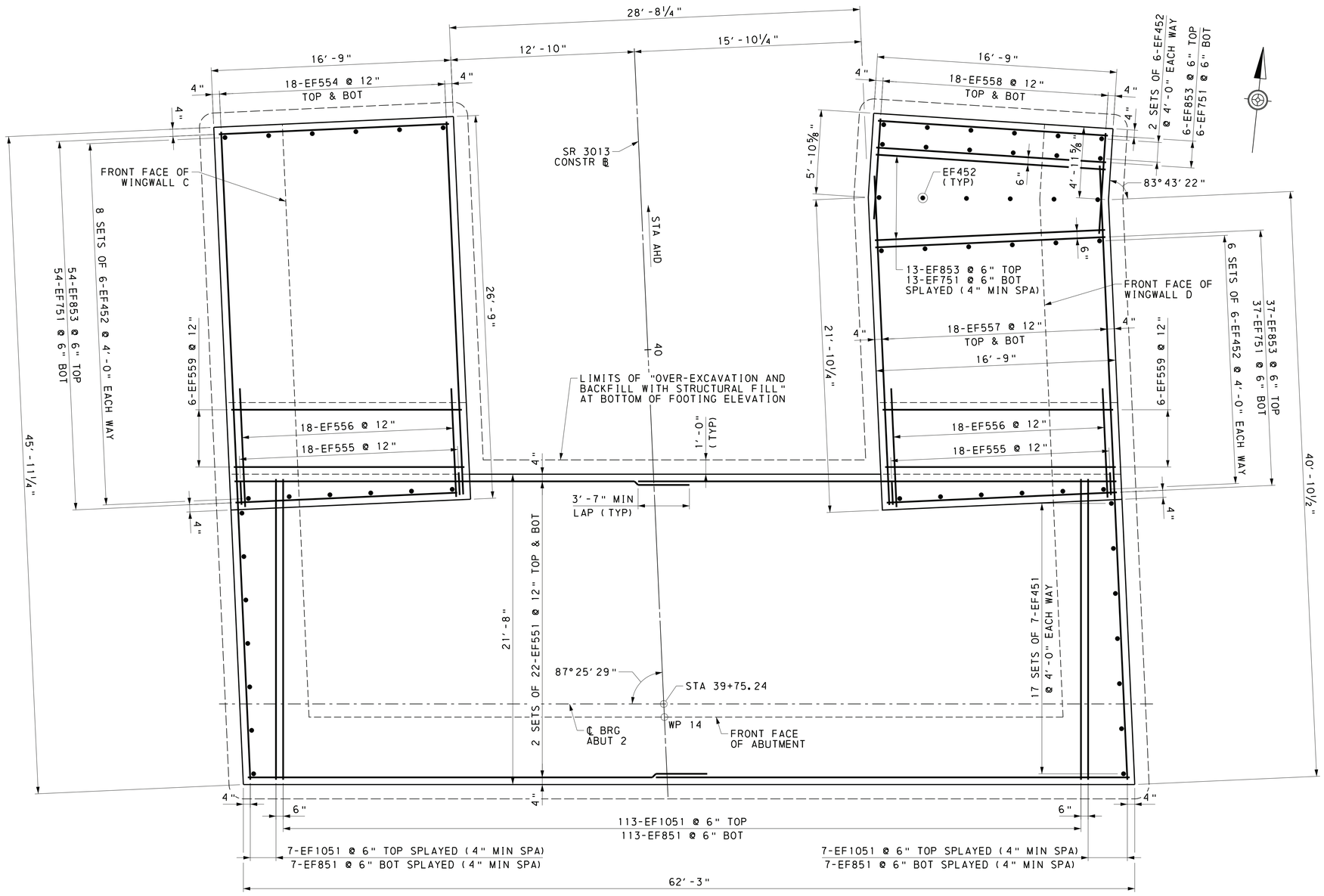

FOOTING PLAN

2 0 2 4 FEET

FOUNDATION PARAMETERS AT ABUTMENT 2		
BEARING CAPACITY	ABUTMENT 2	WINGWALL C & D
SECTION	TYPICAL	TYPICAL
BEARING RESISTANCE	10.39 KSF	14.47 KSF
MAX BEARING PRESSURE	8.95 KSF	6.68 KSF
PERFORMANCE RATIO	1.161	2.165
LIMIT STATE	STR-I	STR-I
LOAD CASE	MAX	MAX
STAGE	FINAL	FINAL
SLIDING CAPACITY	ABUTMENT 2	WINGWALL C & D
SECTION	TYPICAL	TYPICAL
SLIDING RESISTANCE	46.02 K	35.65 K
MAX HORIZONTAL FORCE	33.55 K	35.52 K
PERFORMANCE RATIO	1.372	1.004
LIMIT STATE	STR-I	STR-I
LOAD CASE	MIN	MIN
CONDITION	TEMPORARY	TEMPORARY

SPREAD FOOTING SOIL PARAMETERS	
ALLOWABLE SETTLEMENT	1.0 IN
BEARING CAPACITY PHI FACTOR	0.50
SLIDING PHI FACTOR	0.80
SOIL LAYER 1 THICKNESS	2.0 FT
LAYER 1 MASS UNIT WEIGHT	120 PCF
LAYER 1 SATURATED UNIT WEIGHT	125 PCF
LAYER 1 ELASTIC MODULUS	1584 KSF
LAYER 1 EFFECTIVE FRICTION ANGLE	34 DEG
SOIL LAYER 2 THICKNESS	6.25 FT*
LAYER 2 MASS UNIT WEIGHT	120 PCF
LAYER 2 SATURATED UNIT WEIGHT	125 PCF
LAYER 2 ELASTIC MODULUS	700 KSF
LAYER 2 EFFECTIVE FRICTION ANGLE	25 DEG

*11.25 FT AT STEPPED WINGS

NOTES:

1. WORK POINTS ARE LOCATED AT THE FRONT FACE OF THE ARCHITECTURAL SURFACE TREATMENT.
2. EXCAVATE EXISTING MATERIAL A MINIMUM OF 2'-0" BELOW BOTTOM OF FOOTING. PLACE STRUCTURE BACKFILL UNDERNEATH FOOTING IN COMPACTED LIFTS UP TO THE BOTTOM OF FOOTING ELEVATION.

Mark	Description	By	Chk'd	Recm'd	Date
REVISIONS					

SR 3013 PREVIOUSLY KNOWN AS LR 22075
BMS STR ID: 22-3013-0020-0291 MPMS/ECMS PROJ: 97828 BRKEY: 67416

REFERENCES:	SHEETS:
GENERAL NOTES	4 & 5
STAKE-OUT PLAN	13
ABUTMENT 2 DRAWINGS	23 - 31

HNTB

COMMONWEALTH OF PENNSYLVANIA
REGISTERED PROFESSIONAL
JUSTIN ROBERT MCCARTHY
ENGINEER
PE076998

PREPARED BY:
HNTB CORPORATION
4507 NORTH FRONT STREET
SUITE 300
HARRISBURG, PA 17110

COMMONWEALTH OF PENNSYLVANIA
DEPARTMENT OF TRANSPORTATION

DAUPHIN COUNTY
SR 0083 SECTION 079
SEG 0020 OFFSET 0291
SR 3013 (29TH STREET) STA 37+78.24 OVER
SR 0083 & NORFOLK SOUTHERN RAILWAY COMPANY
3-SPAN CONTINUOUS COMPOSITE PS CONCRETE
PA BULB-TEE BEAM BRIDGE
ABUTMENT 2 FOOTING PLAN

RECOMMENDED 12-6-2022

SHEET 23 OF 93

S-39451

6/23/2022
FILENAME 63016-s-brB1-ab121.dgn

DES: SMZ	DES CKD: CEK	DWG: SMZ	DWG CKD: CEK

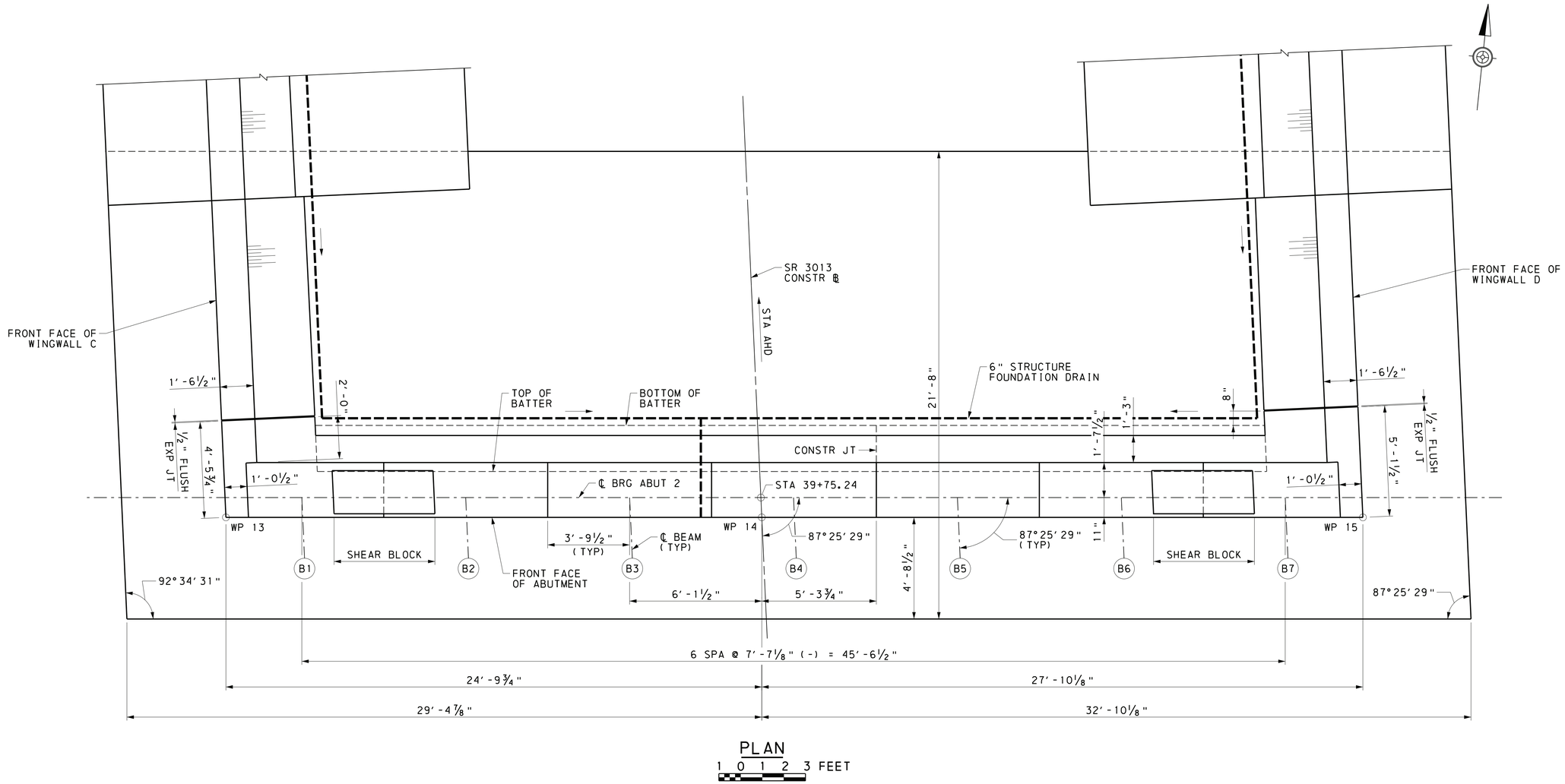

PLAN

1 0 1 2 3 FEET

Mark	Description	By	Chk'd	Recm'd	Date

REVISIONS

SR 3013 PREVIOUSLY KNOWN AS LR 22075
BMS STR ID: 22-3013-0020-0291 MPMS/ECMS PROJ: 97828 BRKEY: 67416

NOTES:

1. WORK POINTS ARE LOCATED AT THE FRONT FACE OF THE ARCHITECTURAL SURFACE TREATMENT.

REFERENCES:	SHEETS:
GENERAL NOTES	4 & 5
STAKE-OUT PLAN	13
ABUTMENT 2 DRAWINGS	23 - 31

HNTB

COMMONWEALTH OF PENNSYLVANIA REGISTERED PROFESSIONAL JUSTIN ROBERT MCCARTHY ENGINEER PE076998

PREPARED BY:
HNTB CORPORATION
4507 NORTH FRONT STREET
SUITE 300
HARRISBURG, PA 17110

COMMONWEALTH OF PENNSYLVANIA
DEPARTMENT OF TRANSPORTATION

DAUPHIN COUNTY
SR 0083 SECTION 079
SEG 0020 OFFSET 0291
SR 3013 (29TH STREET) STA 37+78.24 OVER
SR 0083 & NORFOLK SOUTHERN RAILWAY COMPANY

3-SPAN CONTINUOUS COMPOSITE PS CONCRETE
PA BULB-TEE BEAM BRIDGE

ABUTMENT 2 PLAN

RECOMMENDED 12-6-2022

SHEET 24 OF 93

S-39451

6/23/2022
FILENAME: 63016-s-brB1-ab122.dgn

DES: SMZ	DES CKD: CEK	DWG: SMZ	DWG CKD: CEK

BRIDGE 1

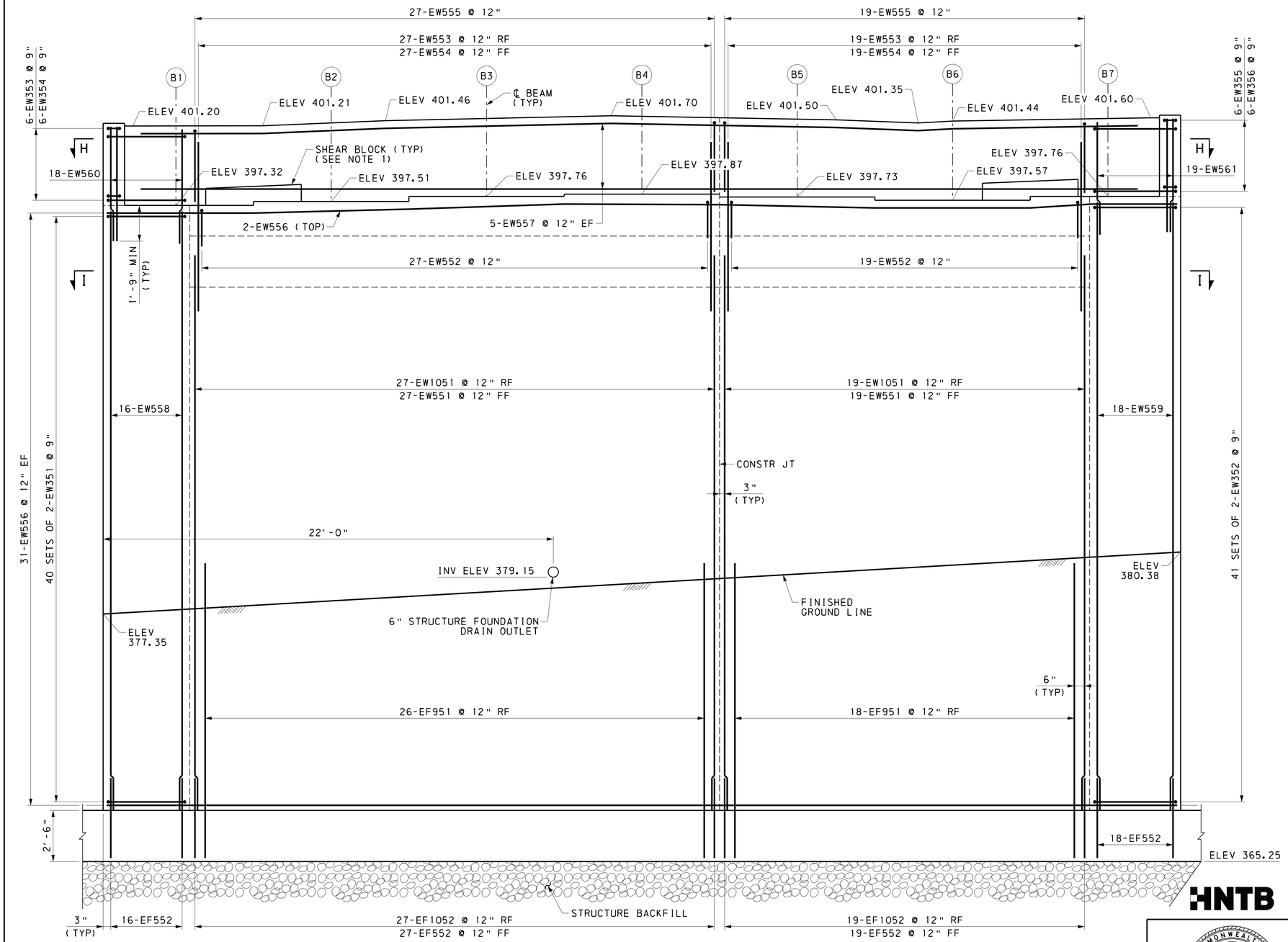

ELEVATION

1 0 1 2 3 FEET

NOTES:

1. SHEAR BLOCK REINFORCEMENT NOT SHOWN FOR CLARITY.
2. BACKWALL ELEVATIONS GIVEN AT LOCATIONS OF SUPERSTRUCTURE BREAK POINTS.

REFERENCES:	SHEETS:
GENERAL NOTES	4 & 5
ABUTMENT 2 DRAWINGS	23 - 31
MISCELLANEOUS ABUTMENT DETAILS	32
ABUTMENT ARCHITECTURAL DETAILS	33

Mark	Description	By	Chk'd	Recm'd	Date
REVISIONS					

SR 3013 PREVIOUSLY KNOWN AS LR 22075
BMS STR ID: 22-3013-0020-0291 MPMS/ECMS PROJ: 97828 BRKEY: 67416

HNTB

COMMONWEALTH OF PENNSYLVANIA
REGISTERED PROFESSIONAL
JUSTIN ROBERT MCCARTHY
ENGINEER
PE076998

PREPARED BY:
HNTB CORPORATION
4507 NORTH FRONT STREET
SUITE 300
HARRISBURG, PA 17110

COMMONWEALTH OF PENNSYLVANIA
DEPARTMENT OF TRANSPORTATION

DAUPHIN COUNTY
SR 0083 SECTION 079
SEG 0020 OFFSET 0291
SR 3013 (29TH STREET) STA 37+78.24 OVER
SR 0083 & NORFOLK SOUTHERN RAILWAY COMPANY

3-SPAN CONTINUOUS COMPOSITE PS CONCRETE
PA BULB-TEE BEAM BRIDGE

ABUTMENT 2 ELEVATION

RECOMMENDED 12-6-2022

SHEET 25 OF 93

S-39451

6/23/2023
FILENAME: 63016-s-br01-db123.dgn

DES: SMZ	DES CKD: CEK	DWG: SMZ	DWG CKD: CEK

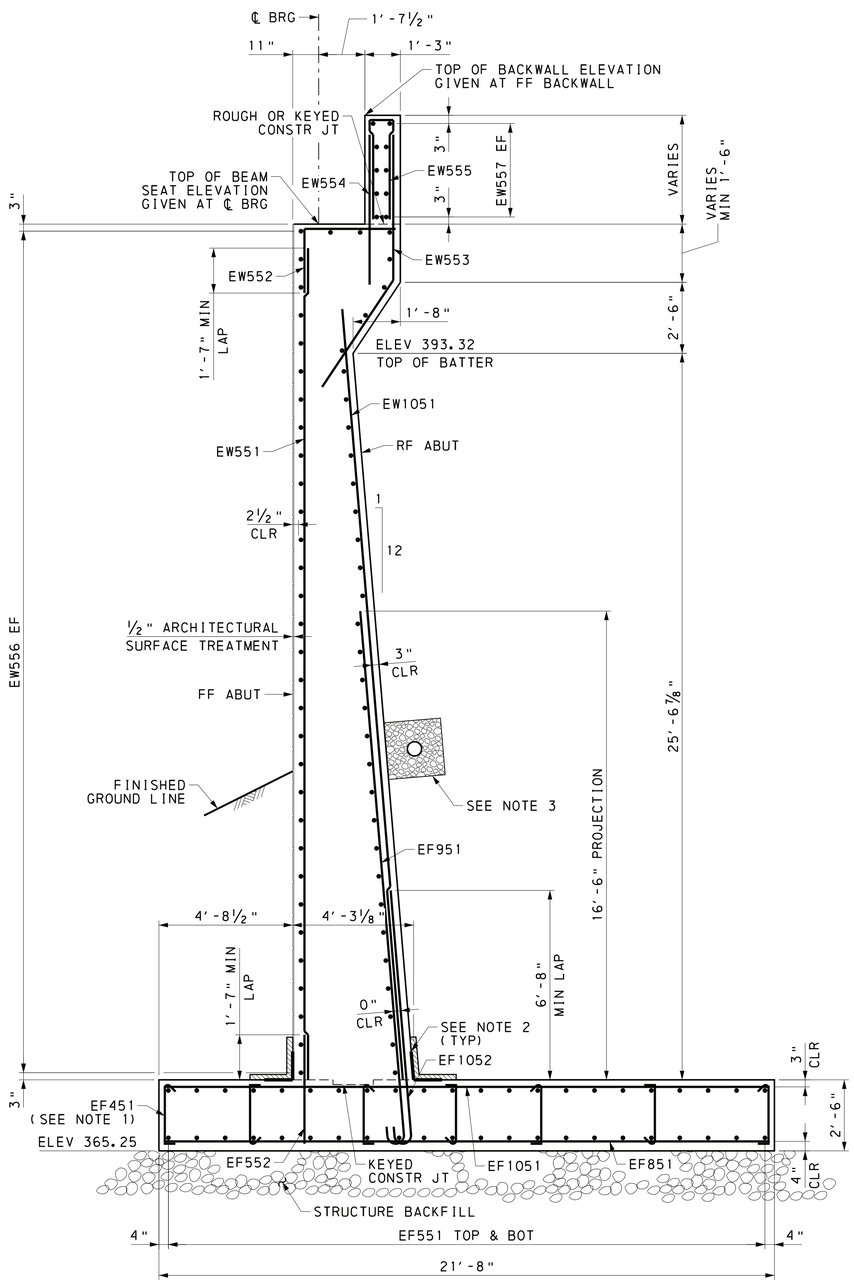

TYPICAL SECTION

1 0 1 2 3 FEET

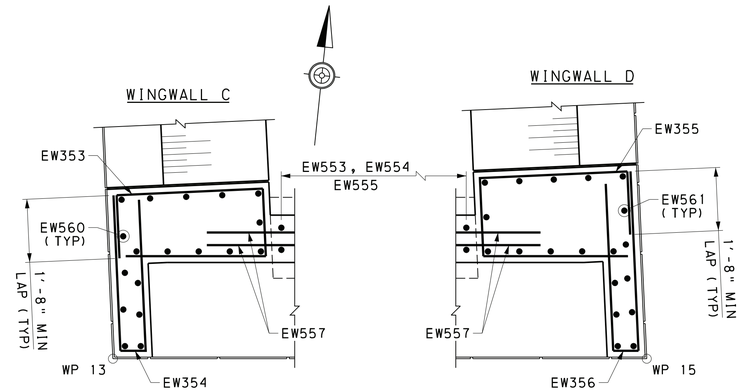

SECTION H-H

1 0 1 2 FEET

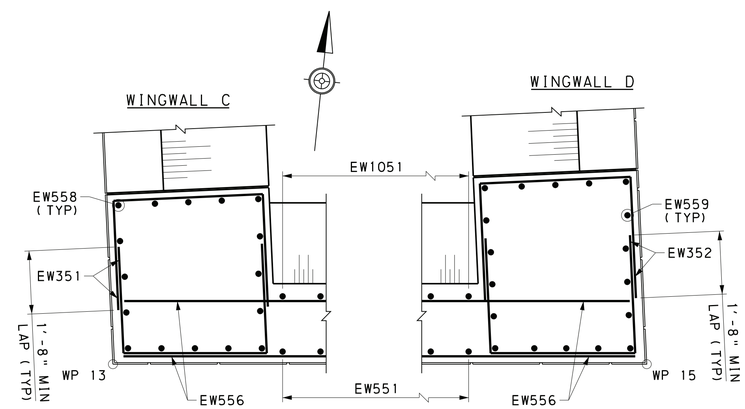

SECTION I-I

1 0 1 2 FEET

NOTES:

1. TIE TOP & BOTTOM MATS OF REINFORCING STEEL WITH #4 TIE BARS AT A MAXIMUM SPACING OF 4'-0" IN BOTH DIRECTIONS. PROVIDE TIE BARS WITH 90° HOOK AT ONE END AND 135° HOOK AT THE OTHER END. ALTERNATE 90° AND 135° HOOKS AT TOP IN ALTERNATE TIES.
2. FOR WATERPROOFING DETAILS, SEE ATTACHMENT BC-788 MODIFIED "SPRAY-ON WATERPROOFING DETAILS".
3. 6" STRUCTURE FOUNDATION DRAIN WITHIN CONTINUOUS 2' x 2' OF NO. 57 COARSE AGGREGATE ENCASED IN GEOTEXTILE, CLASS 1. SEE PUB 408 SECTION 1001.3(d) AND BC-751M.

Mark	Description	By	Chk'd	Recm'd	Date
REVISIONS					

SR 3013 PREVIOUSLY KNOWN AS LR 22075
BMS STR ID: 22-3013-0020-0291 MPMS/ECMS PROJ: 97828 BRKEY: 67416

HNTB

COMMONWEALTH OF PENNSYLVANIA
DEPARTMENT OF TRANSPORTATION

DAUPHIN COUNTY
SR 0083 SECTION 079
SEG 0020 OFFSET 0291
SR 3013 (29TH STREET) STA 37+78.24 OVER
SR 0083 & NORFOLK SOUTHERN RAILWAY COMPANY
3-SPAN CONTINUOUS COMPOSITE PS CONCRETE
PA BULB-TEE BEAM BRIDGE
ABUTMENT 2 SECTION & DETAILS

COMMONWEALTH OF PENNSYLVANIA
REGISTERED PROFESSIONAL
JUSTIN ROBERT MCCARTHY
ENGINEER
PE076998

REFERENCES: SHEETS:

GENERAL NOTES	4 & 5
ABUTMENT 2 DRAWINGS	23 - 31
MISCELLANEOUS ABUTMENT DETAILS	32
ABUTMENT ARCHITECTURAL DETAILS	33

PREPARED BY:
HNTB CORPORATION
4507 NORTH FRONT STREET
SUITE 300
HARRISBURG, PA 17110

RECOMMENDED 12-6-2022

SHEET 26 OF 93

S-39451

12/2/2022
FILENAME: 63016-s-brB1-ab124.dgn

DES: SMZ	DES CKD: CEK	DWG: SMZ	DWG CKD: CEK

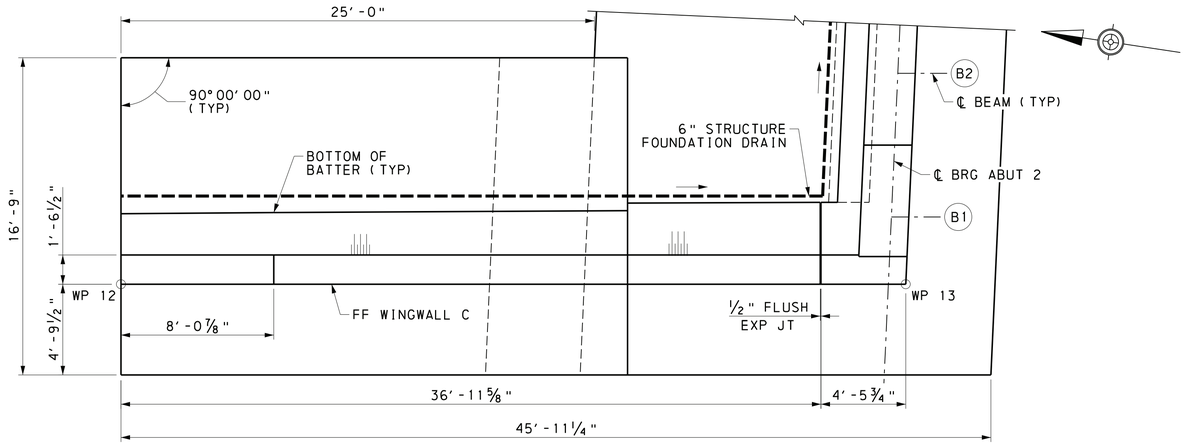

PLAN

2 0 2 4 FEET

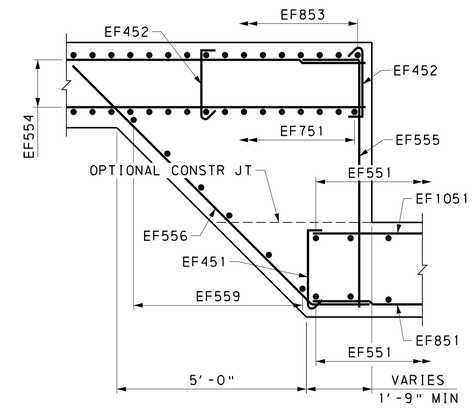

STEP DETAIL

1 0 1 2 FEET

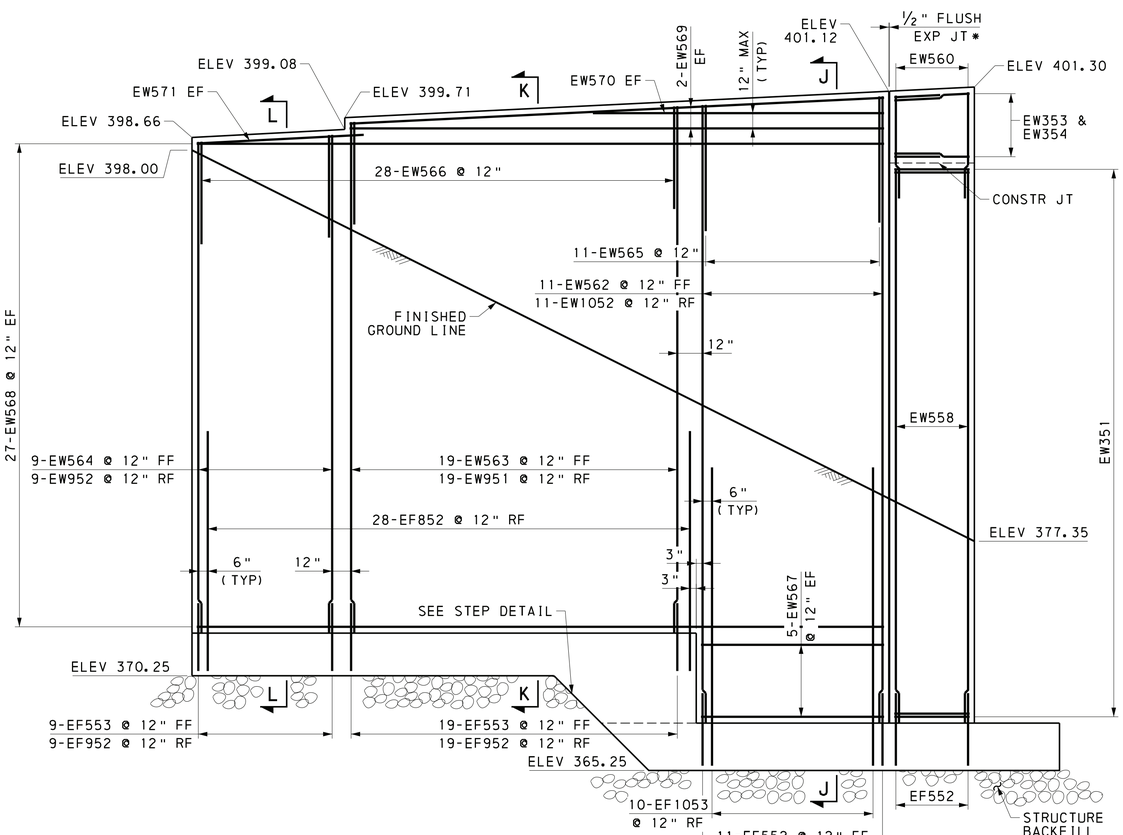

ELEVATION

2 0 2 4 FEET

* FOR WATERPROOFING DETAILS, SEE ATTACHMENT BC-788 MODIFIED "SPRAY-ON WATERPROOFING DETAILS".

REFERENCES:	SHEETS:
GENERAL NOTES	4 & 5
ABUTMENT 2 DRAWINGS	23 - 31
ABUTMENT ARCHITECTURAL DETAILS	33

Mark	Description	By	Chk'd	Recm'd	Date
REVISIONS					

SR 3013 PREVIOUSLY KNOWN AS LR 22075
BMS STR ID: 22-3013-0020-0291 MPMS/ECMS PROJ: 97828 BRKEY: 67416

HNTB

COMMONWEALTH OF PENNSYLVANIA
DEPARTMENT OF TRANSPORTATION

DAUPHIN COUNTY
SR 0083 SECTION 079
SEG 0020 OFFSET 0291
SR 3013 (29TH STREET) STA 37+78.24 OVER
SR 0083 & NORFOLK SOUTHERN RAILWAY COMPANY

3-SPAN CONTINUOUS COMPOSITE PS CONCRETE
PA BULB-TEE BEAM BRIDGE
WINGWALL C PLAN & ELEVATION

COMMONWEALTH OF PENNSYLVANIA
REGISTERED PROFESSIONAL
JUSTIN ROBERT MCCARTHY
ENGINEER
PE076998

PREPARED BY:
HNTB CORPORATION
4507 NORTH FRONT STREET
SUITE 300
HARRISBURG, PA 17110

RECOMMENDED 12-6-2022

SHEET 27 OF 93

S-39451

12/2/2022
FILENAME: 63016-s-brB1-ab125.dgn

DES: SMZ	DES CKD: CEK	DWG: SMZ	DWG CKD: CEK

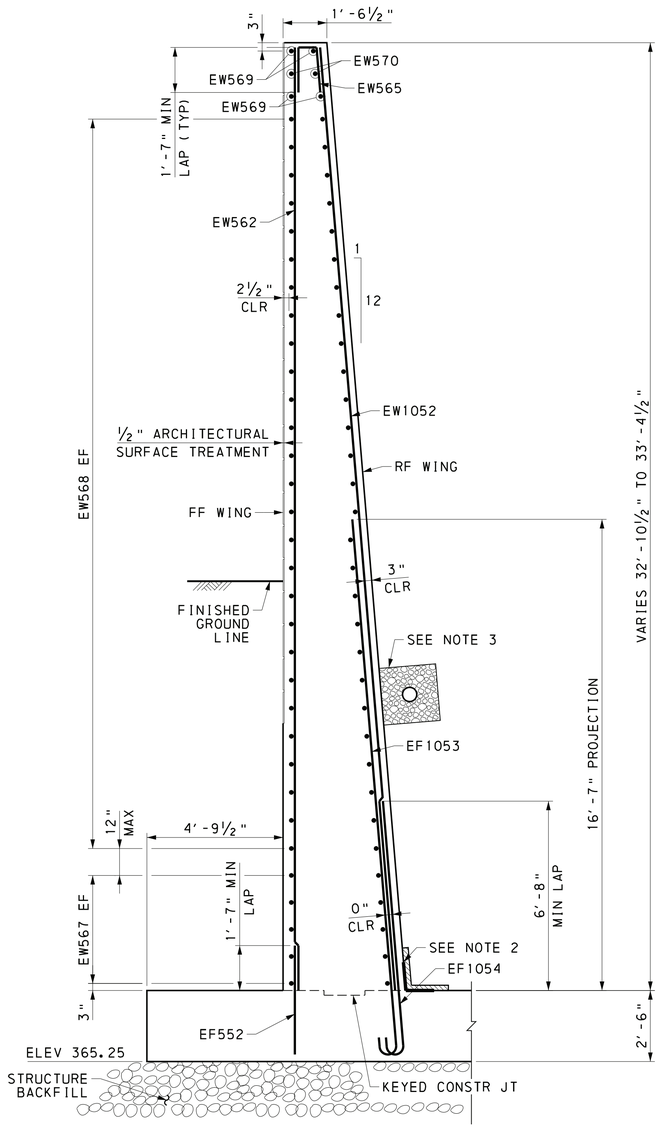

(ABUTMENT FOOTING REINFORCEMENT NOT SHOWN FOR CLARITY)

SECTION J-J

1 0 1 2 3 FEET

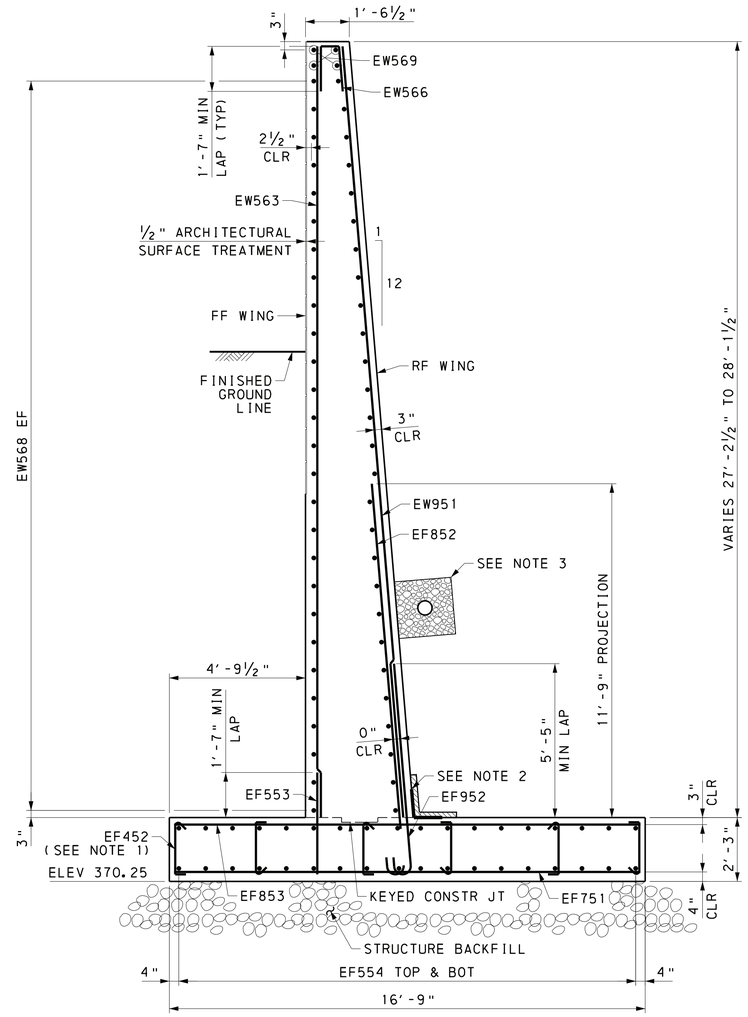

SECTION K-K

1 0 1 2 3 FEET

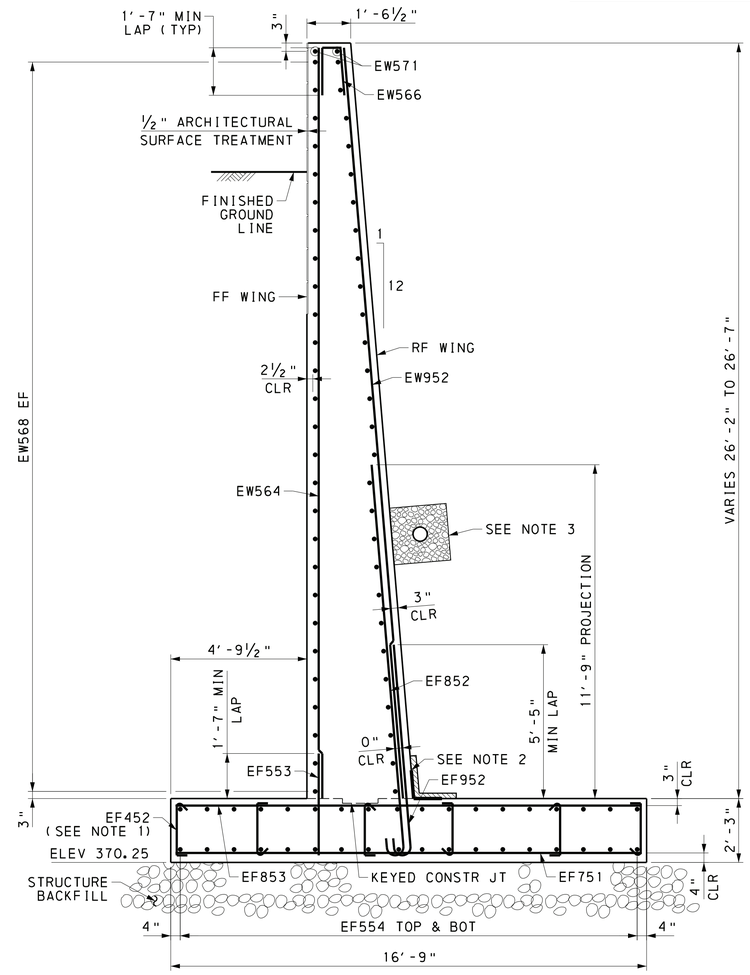

SECTION L-L

1 0 1 2 3 FEET

Mark	Description	By	Chk'd	Recm'd	Date
REVISIONS					

SR 3013 PREVIOUSLY KNOWN AS LR 22075
BMS STR ID: 22-3013-0020-0291 MPMS/ECMS PROJ: 97828 BRKEY: 67416

NOTES:

1. TIE TOP & BOTTOM MATS OF REINFORCING STEEL WITH #4 TIE BARS AT A MAXIMUM SPACING OF 4'-0" IN BOTH DIRECTIONS. PROVIDE TIE BARS WITH 90° HOOK AT ONE END AND 135° HOOK AT THE OTHER END. ALTERNATE 90° AND 135° HOOKS AT TOP IN ALTERNATE TIES.
2. FOR WATERPROOFING DETAILS, SEE ATTACHMENT BC-788 MODIFIED "SPRAY-ON WATERPROOFING DETAILS".
3. 6" STRUCTURE FOUNDATION DRAIN WITHIN CONTINUOUS 2' x 2' OF NO. 57 COARSE AGGREGATE ENCASED IN GEOTEXTILE, CLASS 1. SEE PUB 408 SECTION 1001.3(d) AND BC-751M.

REFERENCES:	SHEETS:
GENERAL NOTES	4 & 5
ABUTMENT 2 DRAWINGS	23 - 31
MISCELLANEOUS ABUTMENT DETAILS	32
ABUTMENT ARCHITECTURAL DETAILS	33

HNTB

COMMONWEALTH OF PENNSYLVANIA
REGISTERED PROFESSIONAL
JUSTIN ROBERT MCCARTHY
ENGINEER
PE076998

PREPARED BY:
HNTB CORPORATION
4507 NORTH FRONT STREET
SUITE 300
HARRISBURG, PA 17110

COMMONWEALTH OF PENNSYLVANIA
DEPARTMENT OF TRANSPORTATION

DAUPHIN COUNTY
SR 0083 SECTION 079
SEG 0020 OFFSET 0291
SR 3013 (29TH STREET) STA 37+78.24 OVER
SR 0083 & NORFOLK SOUTHERN RAILWAY COMPANY

3-SPAN CONTINUOUS COMPOSITE PS CONCRETE
PA BULB-TEE BEAM BRIDGE
WINGWALL C SECTIONS

RECOMMENDED 12-6-2022

SHEET 28 OF 93

S-39451

12/2/2022
FILENAME: 63016-s-brB1-ab126.dgn

DES: SMZ	DES CKD: CEK	DWG: SMZ	DWG CKD: CEK

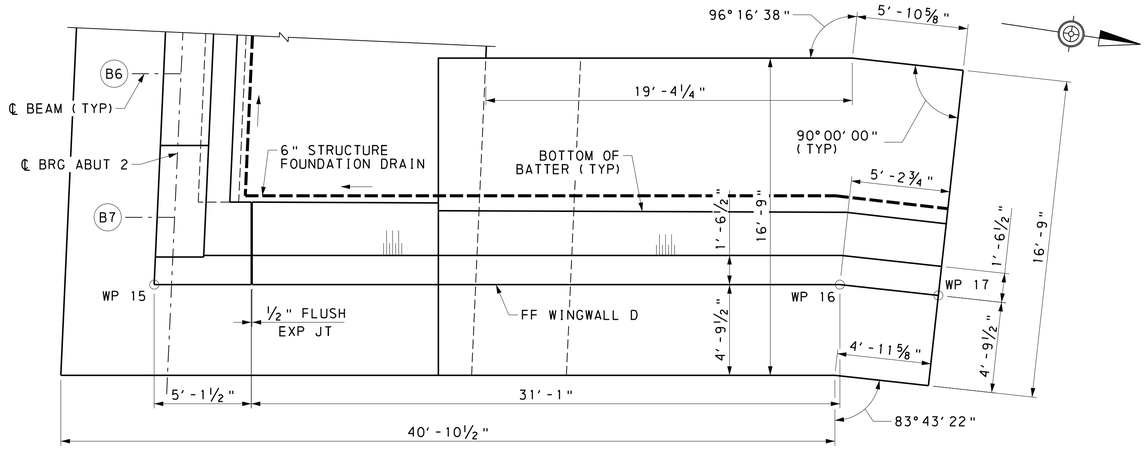

PLAN

2 0 2 4 FEET

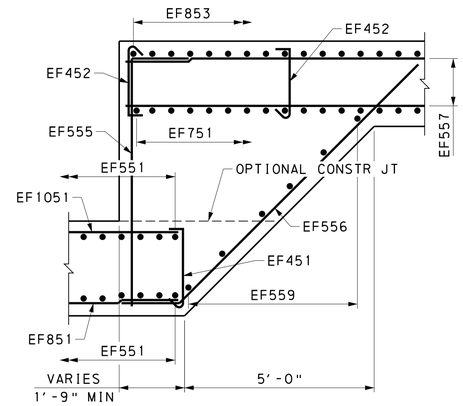

STEP DETAIL

1 0 1 2 FEET

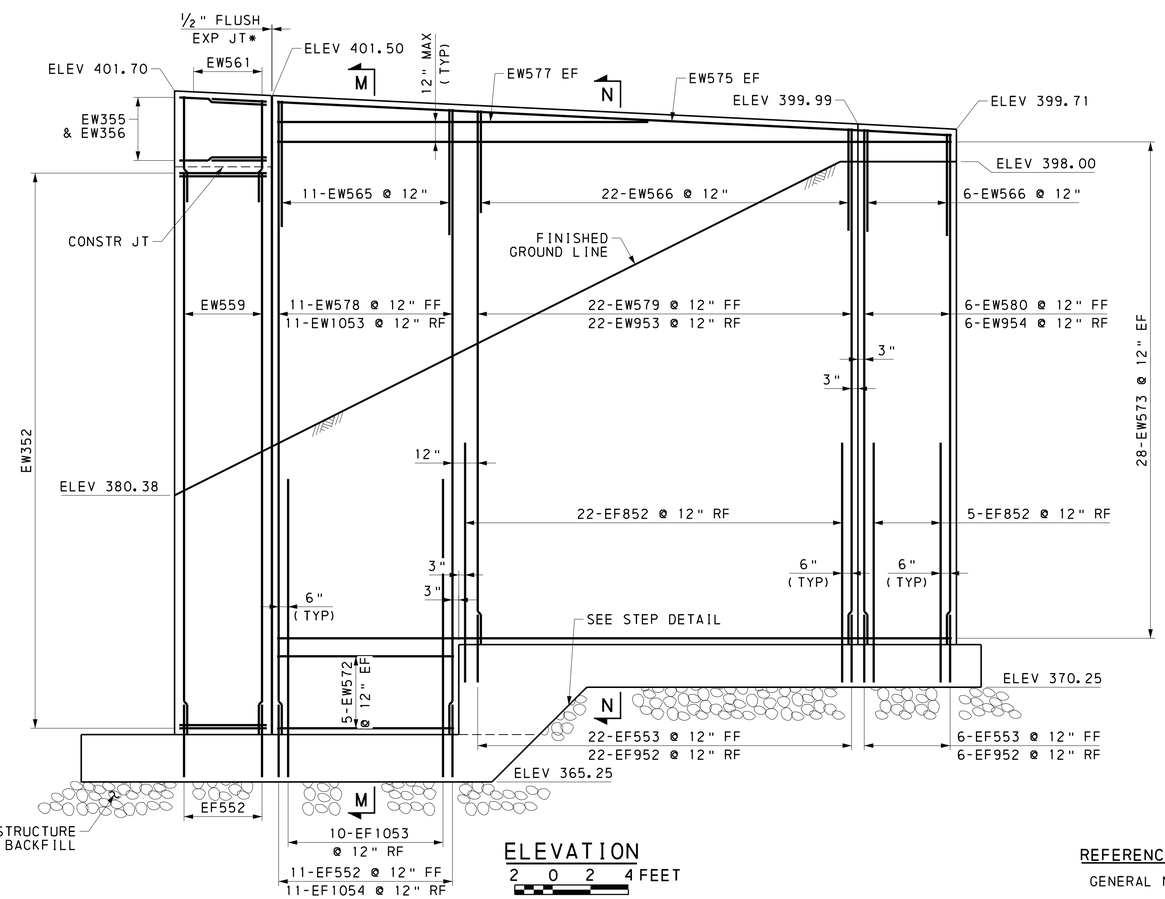

ELEVATION

2 0 2 4 FEET

* FOR WATERPROOFING DETAILS, SEE ATTACHMENT BC-788 MODIFIED "SPRAY-ON WATERPROOFING DETAILS".

REFERENCES:	SHEETS:
GENERAL NOTES	4 & 5
ABUTMENT 2 DRAWINGS	23 - 31
ABUTMENT ARCHITECTURAL DETAILS	33

Mark	Description	By	Chk'd	Recm'd	Date
REVISIONS					

SR 3013 PREVIOUSLY KNOWN AS LR 22075
BMS STR ID: 22-3013-0020-0291 MPMS/ECMS PROJ: 97828 BRKEY: 67416

HNTB

COMMONWEALTH OF PENNSYLVANIA
REGISTERED PROFESSIONAL
JUSTIN ROBERT MCCARTHY
ENGINEER
PE076998

PREPARED BY:
HNTB CORPORATION
4507 NORTH FRONT STREET
SUITE 300
HARRISBURG, PA 17110

COMMONWEALTH OF PENNSYLVANIA
DEPARTMENT OF TRANSPORTATION

DAUPHIN COUNTY
SR 0083 SECTION 079
SEG 0020 OFFSET 0291
SR 3013 (29TH STREET) STA 37+78.24 OVER
SR 0083 & NORFOLK SOUTHERN RAILWAY COMPANY

3-SPAN CONTINUOUS COMPOSITE PS CONCRETE
PA BULB-TEE BEAM BRIDGE

WINGWALL D PLAN & ELEVATION

RECOMMENDED 12-6-2022

SHEET 29 OF 93

S-39451

12/2/2022
FILENAME 63016-s-brB1-ab127.dgn

DES: SMZ	DES CKD: CEK	DWG: SMZ	DWG CKD: CEK

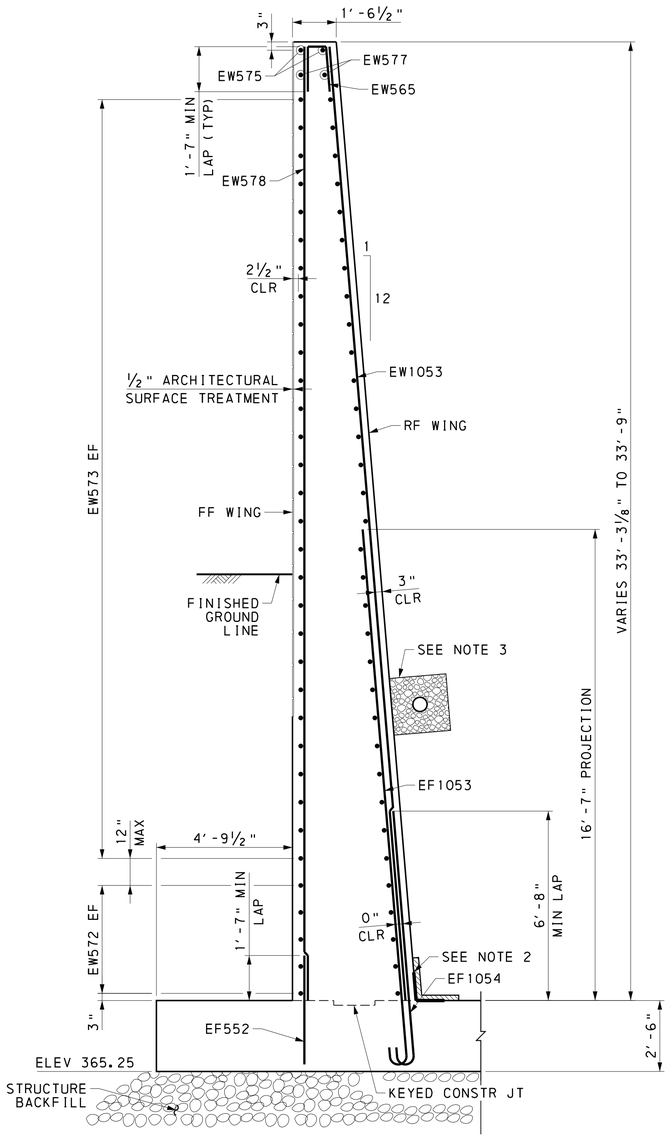

(ABUTMENT FOOTING REINFORCEMENT NOT SHOWN FOR CLARITY)

SECTION M-M

1 0 1 2 3 FEET

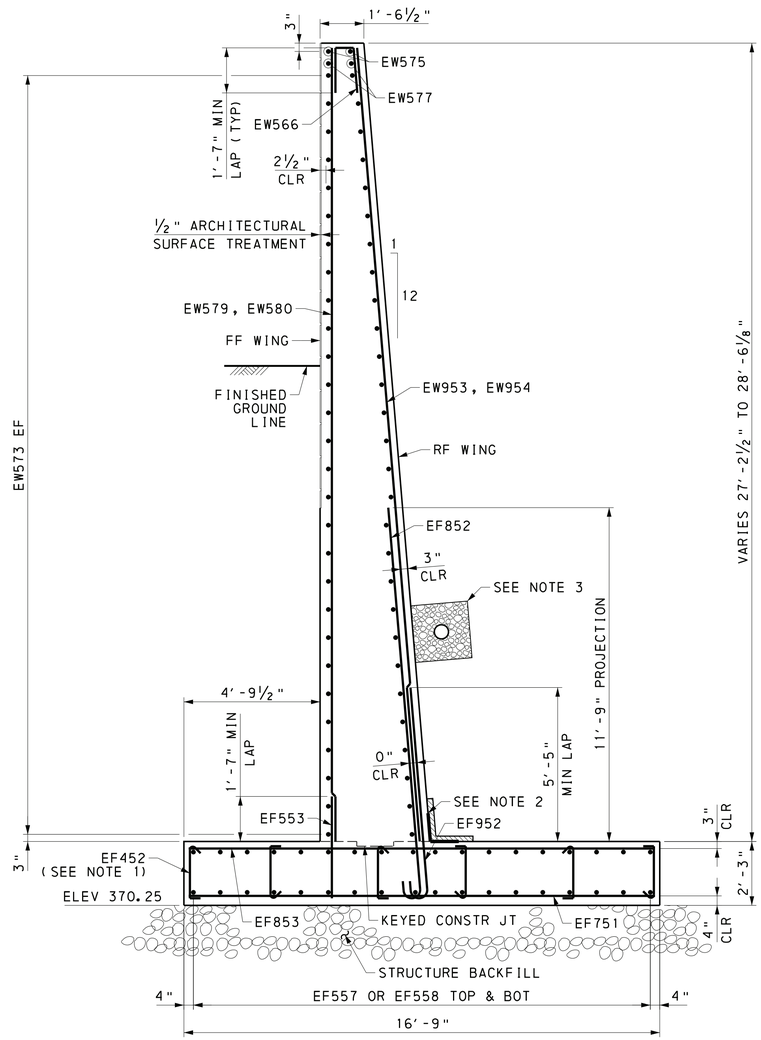

SECTION N-N

1 0 1 2 3 FEET

NOTES:

1. TIE TOP & BOTTOM MATS OF REINFORCING STEEL WITH #4 TIE BARS AT A MAXIMUM SPACING OF 4'-0" IN BOTH DIRECTIONS. PROVIDE TIE BARS WITH 90° HOOK AT ONE END AND 135° HOOK AT THE OTHER END. ALTERNATE 90° AND 135° HOOKS AT TOP IN ALTERNATE TIES.
2. FOR WATERPROOFING DETAILS, SEE ATTACHMENT BC-788 MODIFIED "SPRAY-ON WATERPROOFING DETAILS".
3. 6" STRUCTURE FOUNDATION DRAIN WITHIN CONTINUOUS 2' x 2' OF NO. 57 COARSE AGGREGATE ENCASED IN GEOTEXTILE, CLASS 1. SEE PUB 408 SECTION 1001.3(d) AND BC-751M.

REFERENCES:	SHEETS:
GENERAL NOTES	4 & 5
ABUTMENT 2 DRAWINGS	23 - 31
MISCELLANEOUS ABUTMENT DETAILS	32
ABUTMENT ARCHITECTURAL DETAILS	33

Mark	Description	By	Chk'd	Recm'd	Date
REVISIONS					

SR 3013 PREVIOUSLY KNOWN AS LR 22075
BMS STR ID: 22-3013-0020-0291 MPMS/ECMS PROJ: 97828 BRKEY: 67416

HNTB

COMMONWEALTH OF PENNSYLVANIA REGISTERED PROFESSIONAL JUSTIN ROBERT MCCARTHY ENGINEER PE076998

PREPARED BY:
HNTB CORPORATION
4507 NORTH FRONT STREET
SUITE 300
HARRISBURG, PA 17110

COMMONWEALTH OF PENNSYLVANIA
DEPARTMENT OF TRANSPORTATION

DAUPHIN COUNTY
SR 0083 SECTION 079
SEG 0020 OFFSET 0291
SR 3013 (29TH STREET) STA 37+78.24 OVER
SR 0083 & NORFOLK SOUTHERN RAILWAY COMPANY

3-SPAN CONTINUOUS COMPOSITE PS CONCRETE
PA BULB-TEE BEAM BRIDGE
WINGWALL D SECTIONS

RECOMMENDED 12-6-2022

SHEET 30 OF 93

S-39451

12/2/2022
FILENAME 63016-s-brB1-ab128.dgn

DES: SMZ	DES CKD: CEK	DWG: SMZ	DWG CKD: CEK

MARK	SIZE	NO REQ'D	LENGTH	TYPE	A	B	C	D	E	REMARKS
ABUTMENT 2										
EF451	4	119	2'-8"	63	4 1/2"	1'-11"	4 1/2"			
EF551	5	88	32'-9"	STR						
EF552	5	80	3'-10"	STR						
EF851	8	127	21'-4"	STR						
EF951	9	44	20'-0"	65	1'-3"	18'-9"				J = 11 3/4"
EF1051	10	127	21'-4"	STR						
EF1052	10	46	10'-4"	65	1'-5"	8'-11"				J = 1'-1 1/4"
EW351	3	80	10'-4"	STR						BEND IN FIELD
EW352	3	82	11'-0"	STR						BEND IN FIELD
EW353	3	6	11'-2"	STR						BEND IN FIELD
EW354	3	6	8'-9"	STR						BEND IN FIELD
EW355	3	6	11'-5"	STR						BEND IN FIELD
EW356	3	6	10'-0"	STR						BEND IN FIELD
EW451	4	8	3'-6"	STR						
EW551	5	46	29'-4"	STR						
EW552	5	46	5'-7"	77	3'-4"	2'-3"				
EW553	5	46	8'-10"	78	4'-9"	4'-1"	2'-3 1/4"			
EW554	5	46	4'-5"	STR						
EW555	5	46	7'-10"	31	3'-6"	10"	3'-6"			
EW556	5	64	52'-3"	STR						
EW557	5	10	47'-3"	STR						
EW558	5	16	29'-4"	STR						
EW559	5	18	29'-10"	STR						
EW560	5	18	5'-9"	STR						
EW561	5	19	5'-10"	STR						
EW1051	10	46	26'-7"	STR						
WINGWALL C										
EF452	4	48	2'-5"	63	4 1/2"	1'-8"	4 1/2"			
EF552	5	11	3'-10"	STR						
EF553	5	28	3'-7"	STR						
EF554	5	36	26'-5"	STR						
EF555	5	18	8'-3"	77	6'-7"	1'-8"				
EF556	5	18	10'-10"	78	9'-2"	1'-8"	1'-2"			
EF559	5	6	16'-5"	STR						
EF751	7	54	16'-5"	STR						
EF852	8	28	14'-8"	65	11"	13'-9"				J = 8"
EF853	8	54	16'-5"	STR						
EF952	9	28	8'-8"	65	1'-3"	7'-5"				J = 11 3/4"
EF1053	10	10	20'-3"	65	1'-5"	18'-10"				J = 1'-1 1/4"
EF1054	10	11	10'-4"	65	1'-5"	8'-11"				J = 1'-1 1/4"
EW562	5	11	32'-8" TO	STR						VARY EACH BY 5/8"
			33'-2"							
EW563	5	19	27'-0" TO	STR						VARY EACH BY 5/8"
			27'-11"							
EW564	5	9	25'-11" TO	STR						VARY EACH BY 5/8"
			26'-4"							
EW565	5	11	4'-4"	33	1'-8"	1'-0"	1'-8"		1 5/8"	
EW566	5	28	4'-4"	33	1'-8"	1'-0"	1'-8"		1 5/8"	
EW567	5	10	9'-10"	STR						
EW568	5	54	36'-7"	STR						
EW569	5	4	28'-6"	STR						
EW570	5	2	14'-3"	STR						
EW571	5	2	8'-11"	STR						
EW951	9	19	27'-0" TO	STR						VARY EACH BY 5/8"
			27'-11"							
EW952	9	9	25'-11" TO	STR						VARY EACH BY 5/8"
			26'-4"							
EW1052	10	11	32'-8" TO	STR						VARY EACH BY 5/8"
			33'-2"							

MARK	SIZE	NO REQ'D	LENGTH	TYPE	A	B	C	D	E	REMARKS
WINGWALL D										
EF452	4	54	2'-5"	63	4 1/2"	1'-8"	4 1/2"			
EF552	5	11	3'-10"	STR						
EF553	5	28	3'-7"	STR						
EF555	5	18	8'-3"	77	6'-7"	1'-8"				
EF556	5	18	10'-10"	78	9'-2"	1'-8"	1'-2"			
EF557	5	36	21'-9"	STR						
EF558	5	36	5'-9"	STR						
EF559	5	6	16'-5"	STR						
EF751	7	56	16'-5"	STR						
EF852	8	27	14'-8"	65	11"	13'-9"				J = 8"
EF853	8	56	16'-5"	STR						
EF952	9	28	8'-8"	65	1'-3"	7'-5"				J = 11 3/4"
EF1053	10	10	20'-3"	65	1'-5"	18'-10"				J = 1'-1 1/4"
EF1054	10	11	10'-4"	65	1'-5"	8'-11"				J = 1'-1 1/4"
EW565	5	11	4'-4"	33	1'-8"	1'-0"	1'-8"		1 5/8"	
EW566	5	28	4'-4"	33	1'-8"	1'-0"	1'-8"		1 5/8"	
EW572	5	10	9'-6"	STR						
EW573	5	56	35'-10"	78	30'-10"	5'-0"	6 1/2"			
EW575	5	2	35'-10"	78	30'-10"	5'-0"	6 1/2"			
EW577	5	2	18'-6"	STR						
EW578	5	11	33'-1" TO	STR						VARY EACH BY 5/8"
			33'-7"							
EW579	5	22	27'-3" TO	STR						VARY EACH BY 5/8"
			28'-4"							
EW580	5	6	27'-0" TO	STR						VARY EACH BY 5/8"
			27'-3"							
EW953	9	22	27'-3" TO	STR						VARY EACH BY 5/8"
			28'-4"							
EW954	9	6	27'-0" TO	STR						VARY EACH BY 5/8"
			27'-3"							
EW1053	10	11	33'-1" TO	STR						VARY EACH BY 5/8"
			33'-7"							
SHEAR BLOCKS										
EW598	5	12	6'-8"	31	2'-6"	1'-8"	2'-6"			
EW599	5	6	9'-0"	42	2'-4"	4'-4"	2'-4"			H = 2"

NOTES:

1. "E" PREFIX IN BAR MARK DENOTES EPOXY COATED BARS.
2. ALL DIMENSIONS ARE OUT TO OUT OF BAR EXCEPT "A" & "C" ON STANDARD 135° AND 180° HOOKS, UNLESS NOTED.
3. FOR REINFORCEMENT BAR FABRICATION DETAILS, REFER TO STANDARD DRAWING BC-736M.
4. FIGURES IN CIRCLE REPRESENT BAR TYPES.
5. "J" DIMENSIONS ON 180° HOOKS ARE SHOWN ONLY WHERE NECESSARY TO RESTRICT HOOK SIZE, OTHERWISE STANDARD HOOKS ARE TO BE USED.
6. RADIUS, "R" IS TO THE INSIDE OF THE BAR.
7. REINFORCEMENT BAR SCHEDULE IS FOR INFORMATION ONLY. VERIFY INFORMATION BEFORE FABRICATION.

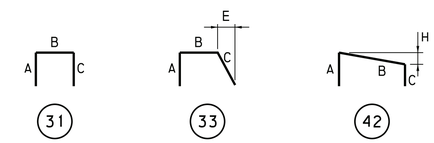

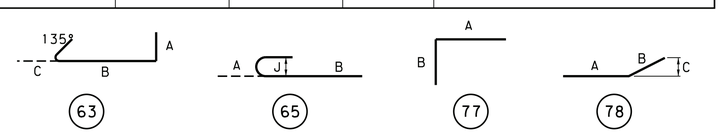

REFERENCES:	SHEETS:
GENERAL NOTES	4 & 5
ABUTMENT 2 DRAWINGS	23 - 31

Mark	Description	By	Chk'd	Recm'd	Date
REVISIONS					

SR 3013 PREVIOUSLY KNOWN AS LR 22075
BMS STR ID: 22-3013-0020-0291 MPMS/ECMS PROJ: 97828 BRKEY: 67416

HNTB

COMMONWEALTH OF PENNSYLVANIA
REGISTERED PROFESSIONAL
JUSTIN ROBERT MCCARTHY
ENGINEER
PE076998

COMMONWEALTH OF PENNSYLVANIA
DEPARTMENT OF TRANSPORTATION

DAUPHIN COUNTY
SR 0083 SECTION 079
SEG 0020 OFFSET 0291
SR 3013 (29TH STREET) STA 37+78.24 OVER
SR 0083 & NORFOLK SOUTHERN RAILWAY COMPANY

3-SPAN CONTINUOUS COMPOSITE PS CONCRETE
PA BULB-TEE BEAM BRIDGE

ABUTMENT 2 REBAR SCHEDULE

PREPARED BY:
HNTB CORPORATION
4507 NORTH FRONT STREET
SUITE 300
HARRISBURG, PA 17110

RECOMMENDED 12-6-2022

S-39451

DES: SMZ | DES CKD: CEK | DWG: SMZ | DWG CKD: CEK

6/23/2022
FILENAME: 63016-s-br81-bar02.dgn

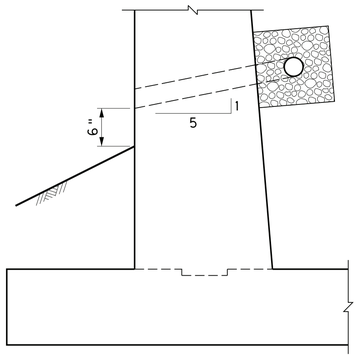

STRUCTURE FOUNDATION DRAIN OUTLET DETAIL

NOT TO SCALE

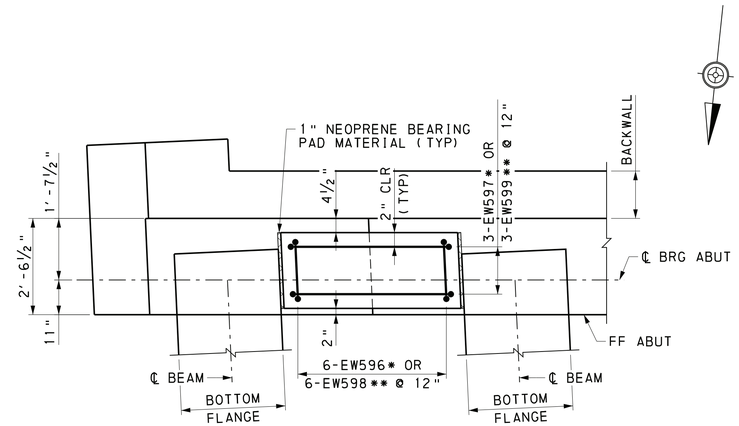

(ABUTMENT 1 BAY 6 SHOWN, OTHER FASCIA BAYS SIMILAR)

SHEAR BLOCK PLAN

1 0 1 2 FEET

* ABUTMENT 1
** ABUTMENT 2

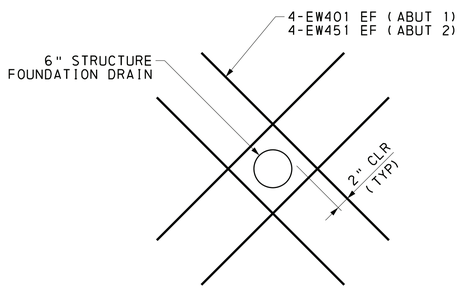

STRUCTURE FOUNDATION DRAIN REINFORCEMENT DETAIL

NOT TO SCALE

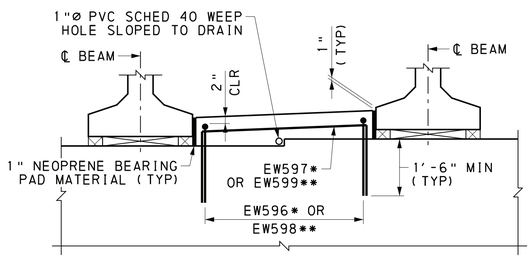

SHEAR BLOCK ELEVATION

1 0 1 2 FEET

Mark	Description	By	Chk'd	Recm'd	Date
REVISIONS					

SR 3013 PREVIOUSLY KNOWN AS LR 22075
BMS STR ID: 22-3013-0020-0291 MPMS/ECMS PROJ: 97828 BRKEY: 67416

HNTB

COMMONWEALTH OF PENNSYLVANIA
DEPARTMENT OF TRANSPORTATION

DAUPHIN COUNTY
SR 0083 SECTION 079
SEG 0020 OFFSET 0291
SR 3013 (29TH STREET) STA 37+78.24 OVER
SR 0083 & NORFOLK SOUTHERN RAILWAY COMPANY
3-SPAN CONTINUOUS COMPOSITE PS CONCRETE
PA BULB-TEE BEAM BRIDGE
MISCELLANEOUS ABUTMENT DETAILS

COMMONWEALTH OF PENNSYLVANIA
REGISTERED PROFESSIONAL
JUSTIN ROBERT MCCARTHY
ENGINEER
PE076998

PREPARED BY:
HNTB CORPORATION
4507 NORTH FRONT STREET
SUITE 300
HARRISBURG, PA 17110

RECOMMENDED 12-6-2022

SHEET 32 OF 93

S-39451

REFERENCES:	SHEETS:
GENERAL NOTES	4 & 5
ABUTMENT 1 & 2 DRAWINGS	14 - 31

6/23/2022
FILENAME 63016-s-br81-ab131.dgn

DES: SMZ	DES CKD: CEK	DWG: SMZ	DWG CKD: CEK

BRIDGE 1

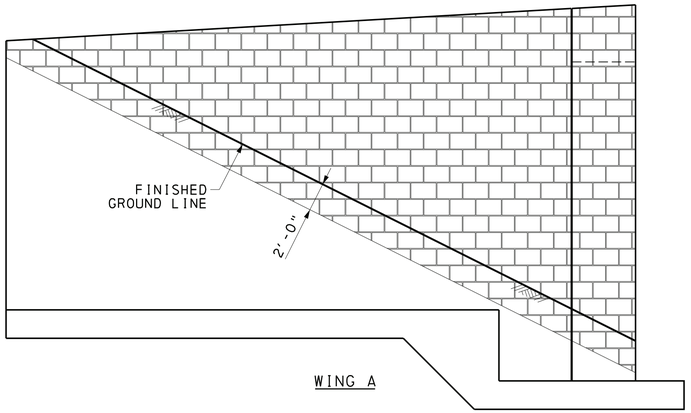

WING A

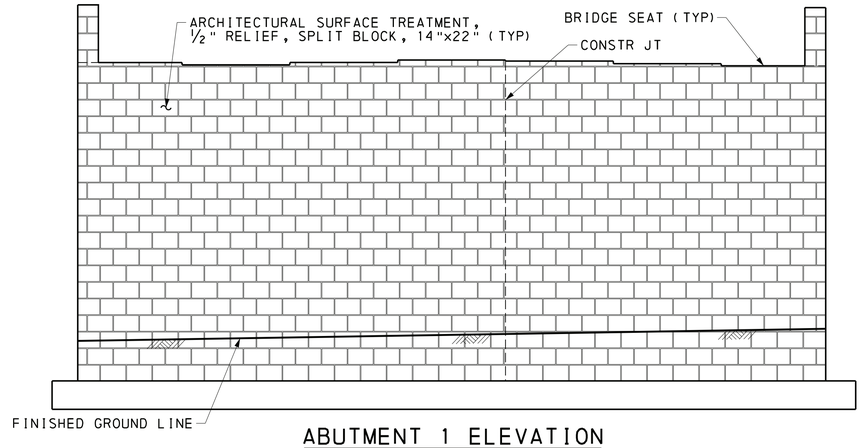

ABUTMENT 1 ELEVATION

2 0 2 4 6 FEET

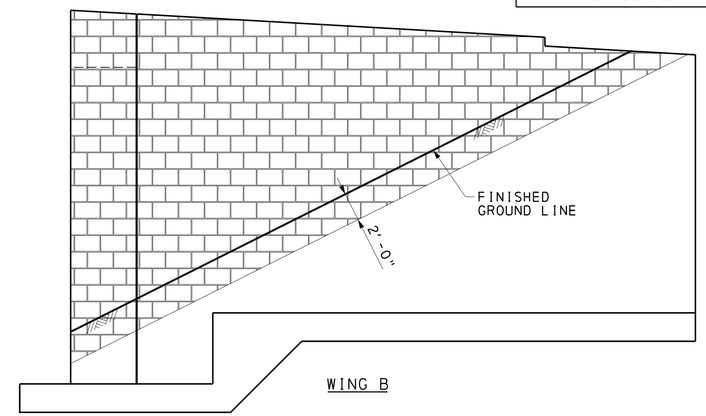

WING B

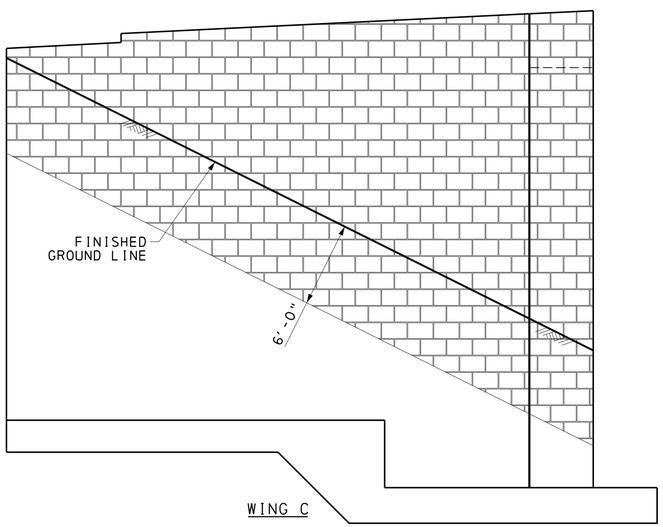

WING C

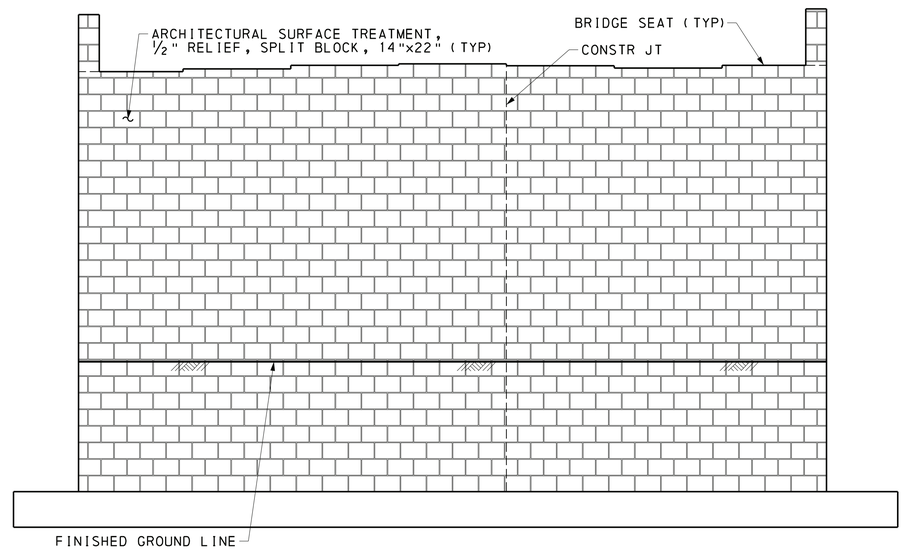

ABUTMENT 2 ELEVATION

2 0 2 4 6 FEET

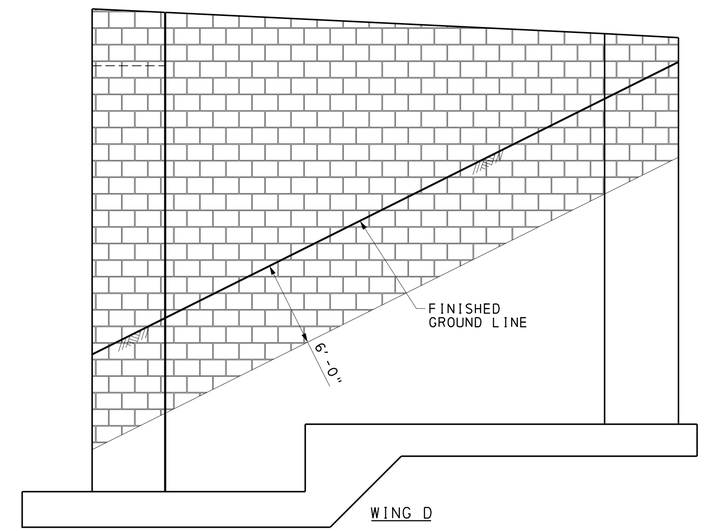

WING D

Mark	Description	By	Chk'd	Recm'd	Date

REVISIONS

SR 3013 PREVIOUSLY KNOWN AS LR 22075
BMS STR ID: 22-3013-0020-0291 MPMS/ECMS PROJ: 97828 BRKEY: 67416

LEGEND:

LIMITS OF ARCHITECTURAL SURFACE TREATMENT

REFERENCES:	SHEETS:
GENERAL NOTES	4 & 5
ABUTMENT 1 & 2 DRAWINGS	14 - 31

HNTB

COMMONWEALTH OF PENNSYLVANIA
REGISTERED PROFESSIONAL
JUSTIN ROBERT MCCARTHY
ENGINEER
PE076998

PREPARED BY:
HNTB CORPORATION
4507 NORTH FRONT STREET
SUITE 300
HARRISBURG, PA 17110

COMMONWEALTH OF PENNSYLVANIA
DEPARTMENT OF TRANSPORTATION

DAUPHIN COUNTY
SR 0083 SECTION 079
SEG 0020 OFFSET 0291
SR 3013 (29TH STREET) STA 37+78.24 OVER
SR 0083 & NORFOLK SOUTHERN RAILWAY COMPANY

3-SPAN CONTINUOUS COMPOSITE PS CONCRETE
PA BULB-TEE BEAM BRIDGE

ABUTMENT ARCHITECTURAL DETAILS

RECOMMENDED 12-6-2022

SHEET 33 OF 93

S-39451

6/23/2022
FILENAME: 63016-s-brB1-ab132.dgn

DES: SMZ	DES CKD: CEK	DWG: SMZ	DWG CKD: CEK

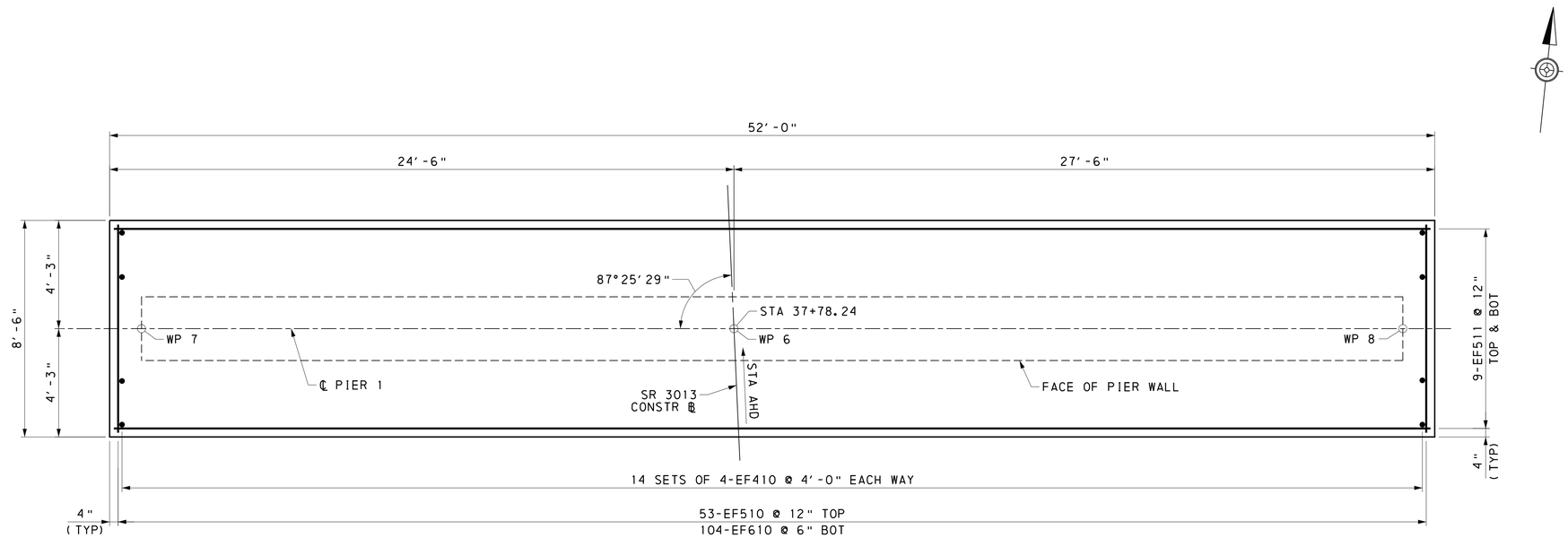

FOOTING PLAN

1 0 1 2 3 FEET

FOUNDATION PARAMETERS AT PIER 1	
EMPIRICAL ROCK BEARING CAPACITY (KSF)	230
BEARING RESISTANCE (KSF)	115
MAX BEARING PRESSURE (KSF)	21.71
LIMIT STATE	STR-III MAX FINAL
MAX HORIZONTAL FORCE	N/A*

* FOUNDATION TO BE KEYED INTO ROCK

NOTES:

1. PROVIDE A NEAT VERTICAL CUT AROUND THE EDGE OF THE FOOTING EXCAVATION AND PLACE FOOTING AGAINST ROCK CUT SURFACE.

Mark	Description	By	Chk'd	Recm'd	Date
REVISIONS					

SR 3013 PREVIOUSLY KNOWN AS LR 22075
BMS STR ID: 22-3013-0020-0291 MPMS/ECMS PROJ: 97828 BRKEY: 67416

HNTB

COMMONWEALTH OF PENNSYLVANIA
DEPARTMENT OF TRANSPORTATION

DAUPHIN COUNTY
SR 0083 SECTION 079
SEG 0020 OFFSET 0291
SR 3013 (29TH STREET) STA 37+78.24 OVER
SR 0083 & NORFOLK SOUTHERN RAILWAY COMPANY
3-SPAN CONTINUOUS COMPOSITE PS CONCRETE
PA BULB-TEE BEAM BRIDGE
PIER 1 FOOTING PLAN

COMMONWEALTH OF PENNSYLVANIA
REGISTERED PROFESSIONAL
JUSTIN ROBERT MCCARTHY
ENGINEER
PE076998

REFERENCES:	SHEETS:
GENERAL NOTES	4 & 5
STAKE-OUT PLAN	13
PIER 1 DRAWINGS	34 - 37

PREPARED BY:
HNTB CORPORATION
4507 NORTH FRONT STREET
SUITE 300
HARRISBURG, PA 17110

RECOMMENDED 12-6-2022

SHEET 34 OF 93

S-39451

6/23/2022
FILENAME: 63016-s-brB1-prs11.dgn

DES: MCA	DES CKD: CEK	DWG: JTM	DWG CKD: CEK

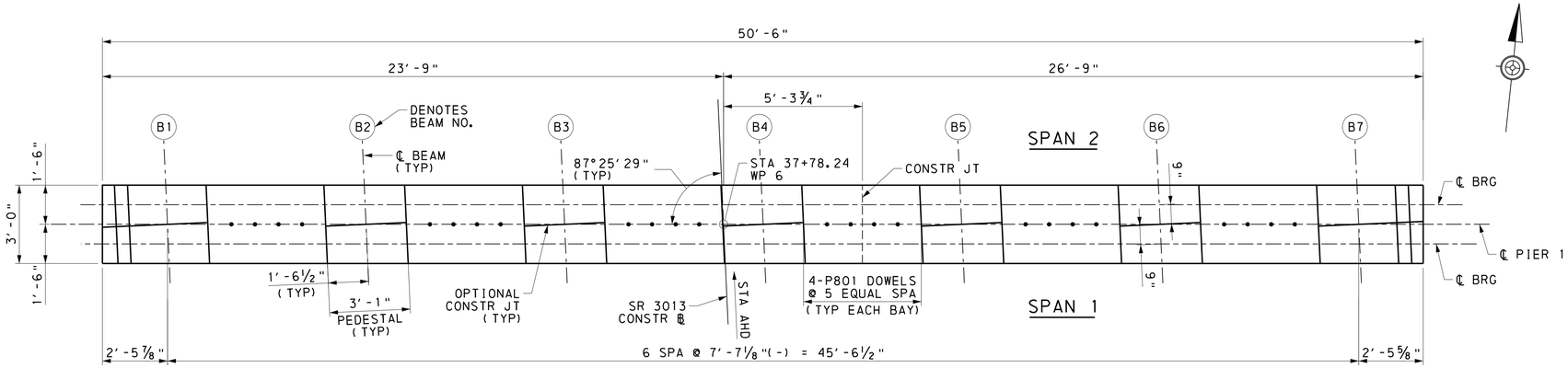

PLAN

1 0 1 2 3 FEET

BEAM SEAT ELEVATIONS							
	BEAM 1	BEAM 2	BEAM 3	BEAM 4	BEAM 5	BEAM 6	BEAM 7
SPAN 1	394.62	394.77	394.95	395.02	394.85	394.68	394.84
SPAN 2	394.85	395.01	395.23	395.30	395.13	394.94	395.10

NOTES:

1. BEAM SEAT ELEVATIONS GIVEN AT INTERSECTION OF ℄ BEAM & ℄ BRG.
2. BEAM SEATS ARE LEVEL IN TRANSVERSE AND LONGITUDINAL DIRECTIONS.

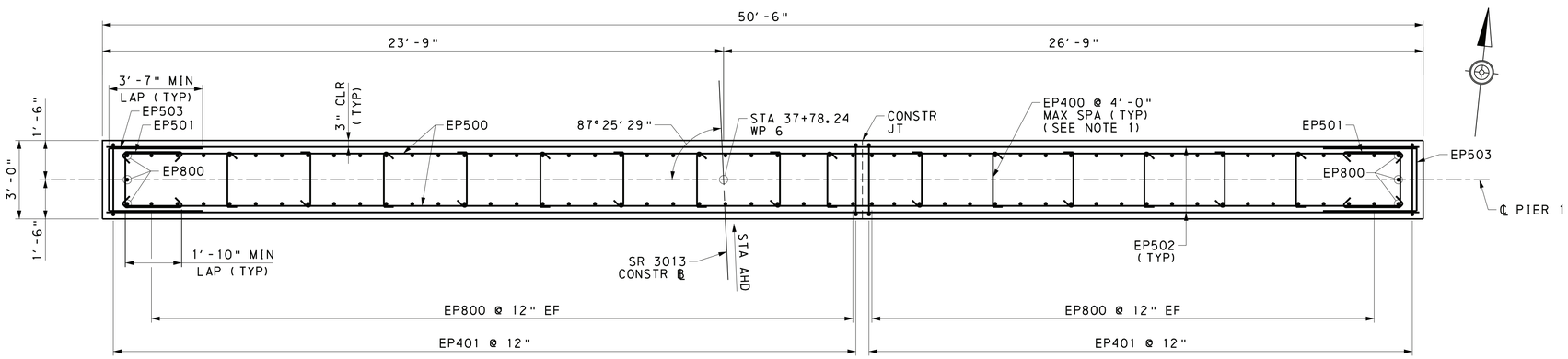

SECTION O-O

1 0 1 2 3 FEET

NOTES:

1. ALL HOOKS ON TIES MUST ENGAGE VERTICAL COLUMN REINFORCING STEEL. ALTERNATE 90° & 135° HOOKS ON CROSS TIES BOTH VERTICALLY AND HORIZONTALLY.

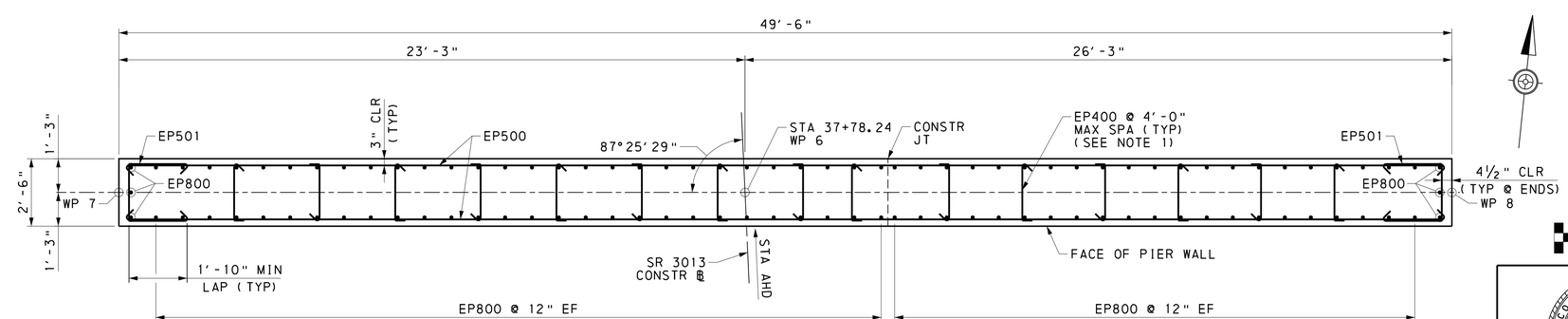

SECTION P-P

1 0 1 2 3 FEET

REFERENCES:	SHEETS:
GENERAL NOTES	4 & 5
STAKE-OUT PLAN	13
PIER 1 DRAWINGS	34 - 37

Mark	Description	By	Chk'd	Recm'd	Date
REVISIONS					

SR 3013 PREVIOUSLY KNOWN AS LR 22075
BMS STR ID: 22-3013-0020-0291 MPMS/ECMS PROJ: 97828 BRKEY: 67416

HNTB

COMMONWEALTH OF PENNSYLVANIA
REGISTERED PROFESSIONAL
JUSTIN ROBERT MCCARTHY
ENGINEER
PE076998

COMMONWEALTH OF PENNSYLVANIA
DEPARTMENT OF TRANSPORTATION

DAUPHIN COUNTY
SR 0083 SECTION 079
SEG 0020 OFFSET 0291
SR 3013 (29TH STREET) STA 37+78.24 OVER
SR 0083 & NORFOLK SOUTHERN RAILWAY COMPANY
3-SPAN CONTINUOUS COMPOSITE PS CONCRETE
PA BULB-TEE BEAM BRIDGE
PIER 1 PLAN

PREPARED BY:
HNTB CORPORATION
4507 NORTH FRONT STREET
SUITE 300
HARRISBURG, PA 17110

RECOMMENDED 12-6-2022

SHEET 35 OF 93

S-39451

6/23/2022
FILENAME: 63016-s-brB1-prs12.dgn

DES: MCA	DES CKD: CEK	DWG: JTM	DWG CKD: CEK

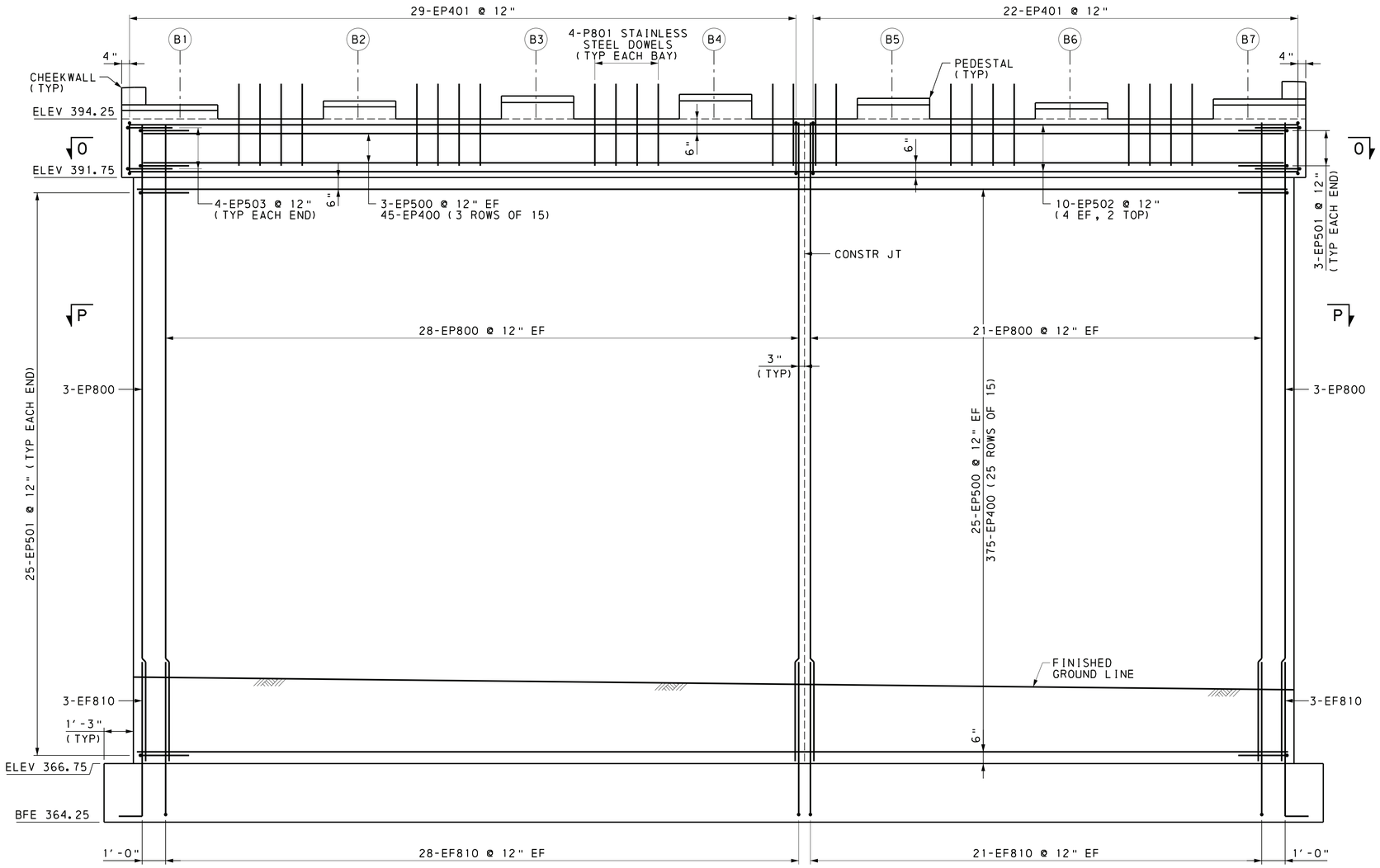

ELEVATION

1 0 1 2 3 FEET

(PEDESTAL, CHEEKWALL & FOOTING REINFORCEMENT NOT SHOWN FOR CLARITY)

BRIDGE 1

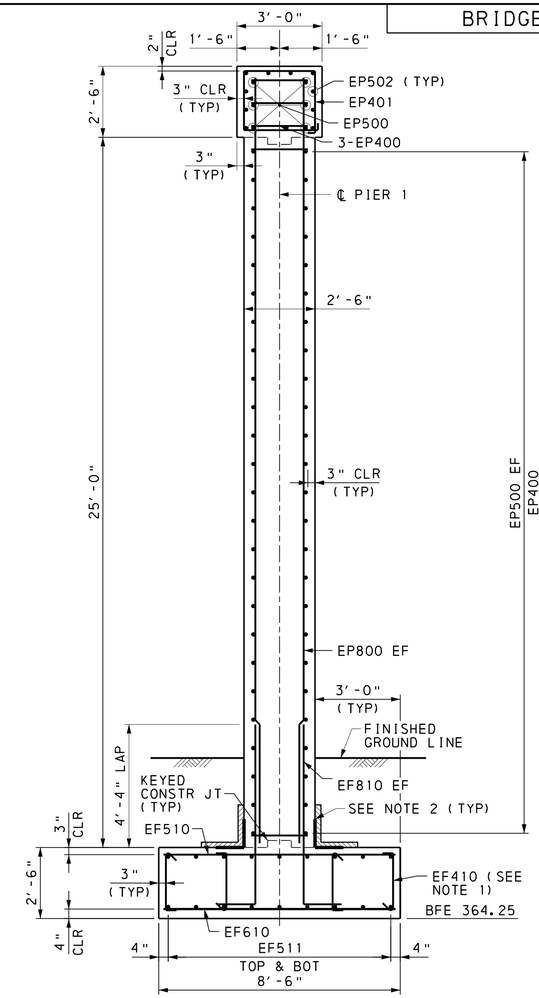

TYPICAL SECTION

1 0 1 2 3 FEET

Mark	Description	By	Chk'd	Recm'd	Date

REVISIONS

SR 3013 PREVIOUSLY KNOWN AS LR 22075

BMS STR ID: 22-3013-0020-0291 MPMS/ECMS PROJ: 97828 BRKEY: 67416

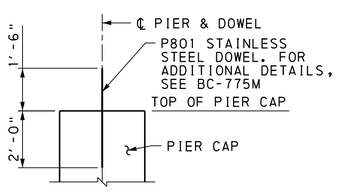

DOWEL DETAIL

1 0 1 2 3 FEET

NOTES:

1. TIE TOP AND BOTTOM MATS OF REINFORCING STEEL WITH #4 TIE BARS AT A MAXIMUM SPACING OF 4'-0" IN BOTH DIRECTIONS. PROVIDE TIE BARS WITH 90° HOOK AT ONE END AND 135° HOOK AT THE OTHER END. ALTERNATE 90° AND 135° HOOK AT TOP IN ALTERNATING TIES.
2. FOR WATERPROOFING DETAILS, SEE ATTACHMENT BC-788 MODIFIED "SPRAY-ON WATERPROOFING DETAILS".
3. UNDERPASS LIGHTING DETAILS NOT SHOWN FOR CLARITY.

REFERENCES:	SHEETS:
GENERAL NOTES	4 & 5
STAKE-OUT PLAN	13
PIER 1 DRAWINGS	34 - 37

HNTB

COMMONWEALTH OF PENNSYLVANIA
REGISTERED PROFESSIONAL
JUSTIN ROBERT MCCARTHY
ENGINEER
PE076998

PREPARED BY:
HNTB CORPORATION
4507 NORTH FRONT STREET
SUITE 300
HARRISBURG, PA 17110

COMMONWEALTH OF PENNSYLVANIA
DEPARTMENT OF TRANSPORTATION

DAUPHIN COUNTY
SR 0083 SECTION 079
SEG 0020 OFFSET 0291
SR 3013 (29TH STREET) STA 37+78.24 OVER
SR 0083 & NORFOLK SOUTHERN RAILWAY COMPANY

3-SPAN CONTINUOUS COMPOSITE PS CONCRETE
PA BULB-TEE BEAM BRIDGE

PIER 1 ELEVATION & SECTION

RECOMMENDED 12-6-2022

SHEET 36 OF 93

S-39451

12/2/2022
FILENAME: 63016-s-brB1-prs13.dgn

DES: MCA	DES CKD: CEK	DWG: JTM	DWG CKD: CEK

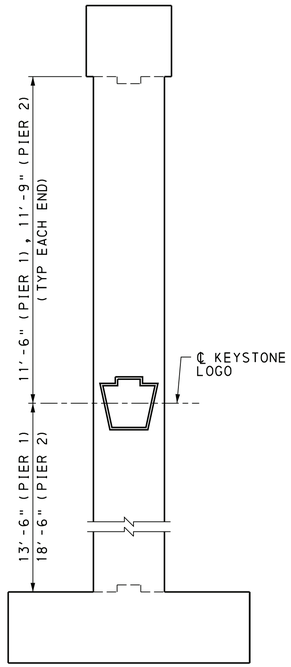

PIER END VIEW
EAST END SHOWN, WEST END SIMILAR
1 0 1 2 3 FEET

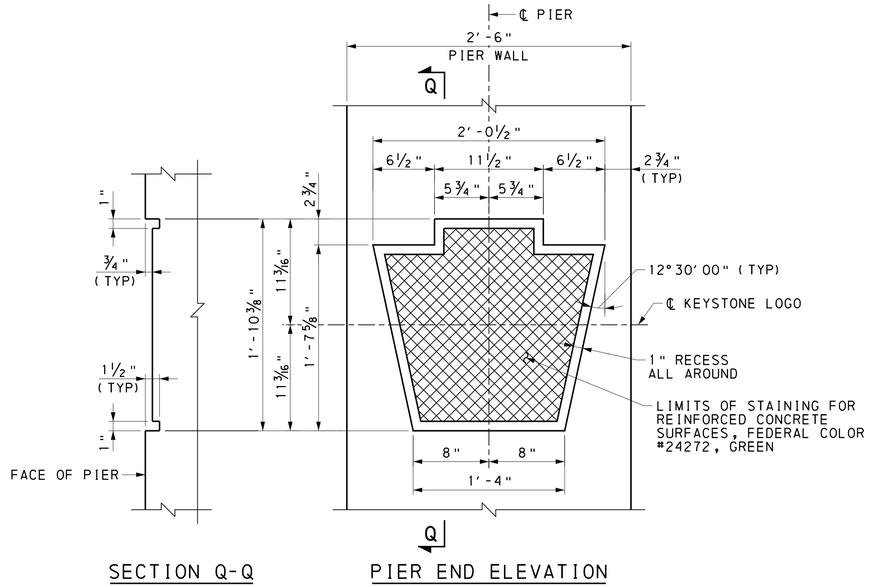

SECTION Q-Q

PIER END ELEVATION

KEYSTONE LOGO DETAIL
6 0 6 INCHES

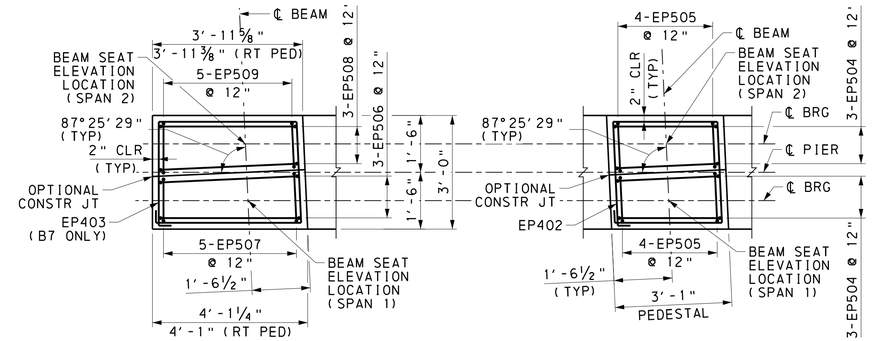

PLAN

PLAN

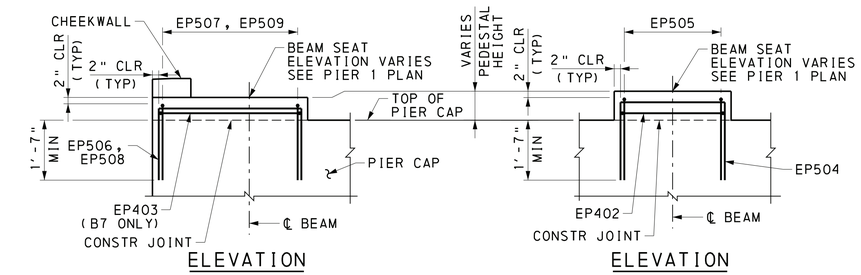

ELEVATION

ELEVATION

EXTERIOR PEDESTAL
1 0 1 2 FEET

(LEFT PEDESTAL SHOWN, RIGHT PEDESTAL SIMILAR BY OPPOSITE HAND AND AS NOTED)

INTERIOR PEDESTAL
1 0 1 2 FEET

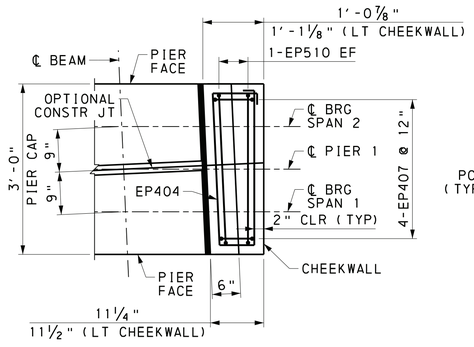

PLAN

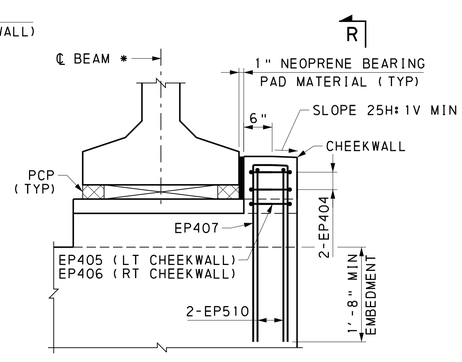

ELEVATION

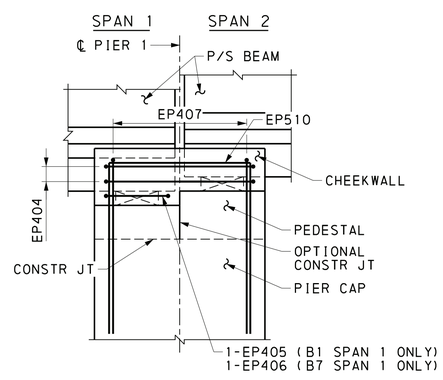

SECTION R-R

* - SPAN 2 BEAM SHOWN, SPAN 1 BEAM NOT SHOWN FOR CLARITY

CHEEKWALL DETAILS
12 0 12 INCHES

(RIGHT CHEEKWALL SHOWN, LEFT CHEEKWALL SIMILAR BY OPPOSITE HAND AND AS NOTED)

NOTES:

1. SEE BC-788M FOR WATERPROOFING DETAILS.

Mark	Description	By	Chk'd	Recm'd	Date
	REVISIONS				

SR 3013 PREVIOUSLY KNOWN AS LR 22075
BMS STR ID: 22-3013-0020-0291 MPMS/ECMS PROJ: 97828 BRKEY: 67416

REFERENCES:	SHEETS:
GENERAL NOTES	4 & 5
STAKE-OUT PLAN	13
PIER 1 DRAWINGS	34 - 37

HNTB

COMMONWEALTH OF PENNSYLVANIA
REGISTERED PROFESSIONAL
JUSTIN ROBERT MCCARTHY
ENGINEER
PE076998

PREPARED BY:
HNTB CORPORATION
4507 NORTH FRONT STREET
SUITE 300
HARRISBURG, PA 17110

COMMONWEALTH OF PENNSYLVANIA
DEPARTMENT OF TRANSPORTATION

DAUPHIN COUNTY
SR 0083 SECTION 079
SEG 0020 OFFSET 0291
SR 3013 (29TH STREET) STA 37+78.24 OVER
SR 0083 & NORFOLK SOUTHERN RAILWAY COMPANY
3-SPAN CONTINUOUS COMPOSITE PS CONCRETE
PA BULB-TEE BEAM BRIDGE
PIER 1 DETAILS

RECOMMENDED 12-6-2022

SHEET 37 OF 93

S-39451

6/23/2022
FILENAME 63016-s-brB1-prs14.dgn

DES: MCA	DES CKD: CEK	DWG: JTM	DWG CKD: CEK

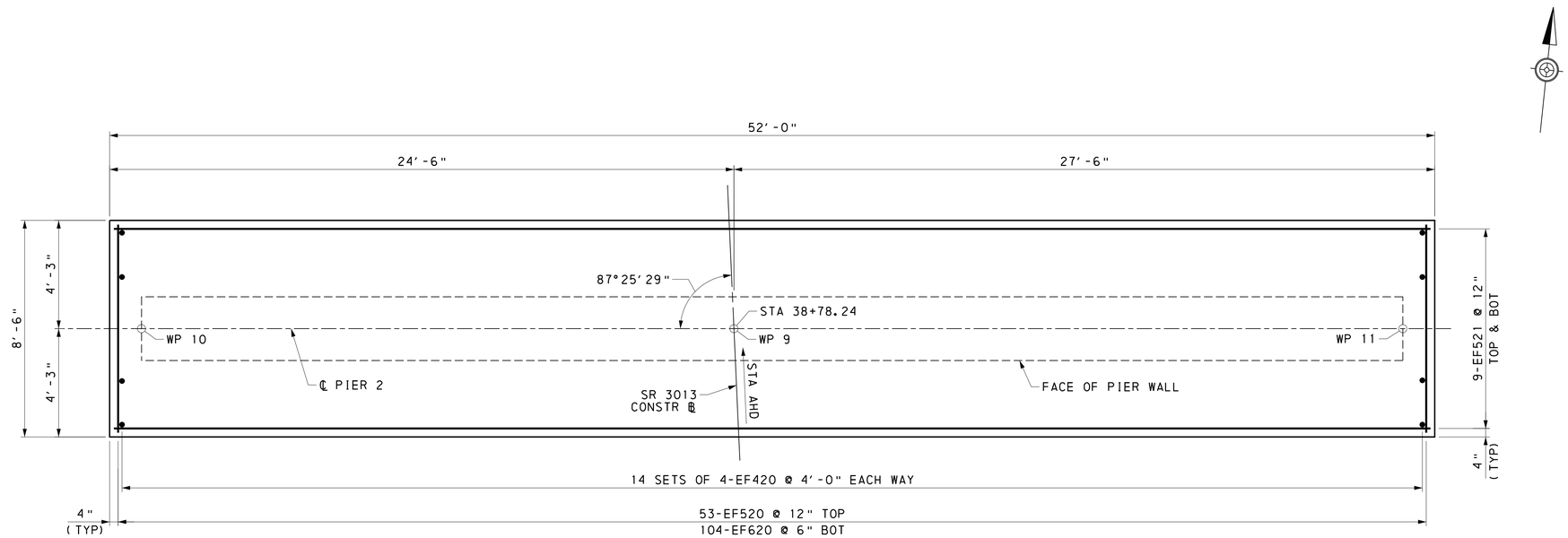

FOOTING PLAN

1 0 1 2 3 FEET

FOUNDATION PARAMETERS AT PIER 2	
EMPIRICAL ROCK BEARING CAPACITY (KSF)	230
BEARING RESISTANCE (KSF)	115
MAX BEARING PRESSURE (KSF)	23.54
LIMIT STATE	STR-III MAX FINAL
MAX HORIZONTAL FORCE	N/A*

* FOUNDATION TO BE KEYED INTO ROCK

NOTES:

1. PROVIDE A NEAT VERTICAL CUT AROUND THE EDGE OF THE FOOTING EXCAVATION AND PLACE FOOTING AGAINST ROCK CUT SURFACE.

Mark	Description	By	Chk'd	Recm'd	Date
REVISIONS					

SR 3013 PREVIOUSLY KNOWN AS LR 22075
BMS STR ID: 22-3013-0020-0291 MPMS/ECMS PROJ: 97828 BRKEY: 67416

HNTB

COMMONWEALTH OF PENNSYLVANIA
DEPARTMENT OF TRANSPORTATION

DAUPHIN COUNTY
SR 0083 SECTION 079
SEG 0020 OFFSET 0291
SR 3013 (29TH STREET) STA 37+78.24 OVER
SR 0083 & NORFOLK SOUTHERN RAILWAY COMPANY
3-SPAN CONTINUOUS COMPOSITE PS CONCRETE
PA BULB-TEE BEAM BRIDGE
PIER 2 FOOTING PLAN

COMMONWEALTH OF PENNSYLVANIA
REGISTERED PROFESSIONAL
JUSTIN ROBERT MCCARTHY
ENGINEER
PE076998

REFERENCES:	SHEETS:
GENERAL NOTES	4 & 5
STAKE-OUT PLAN	13
PIER 2 DRAWINGS	38 - 41

PREPARED BY:
HNTB CORPORATION
4507 NORTH FRONT STREET
SUITE 300
HARRISBURG, PA 17110

RECOMMENDED 12-6-2022

SHEET 38 OF 93

S-39451

6/23/2022
FILENAME: 63016-s-brB1-prs21.dgn

DES: MCA	DES CKD: CEK	DWG: JTM	DWG CKD: CEK

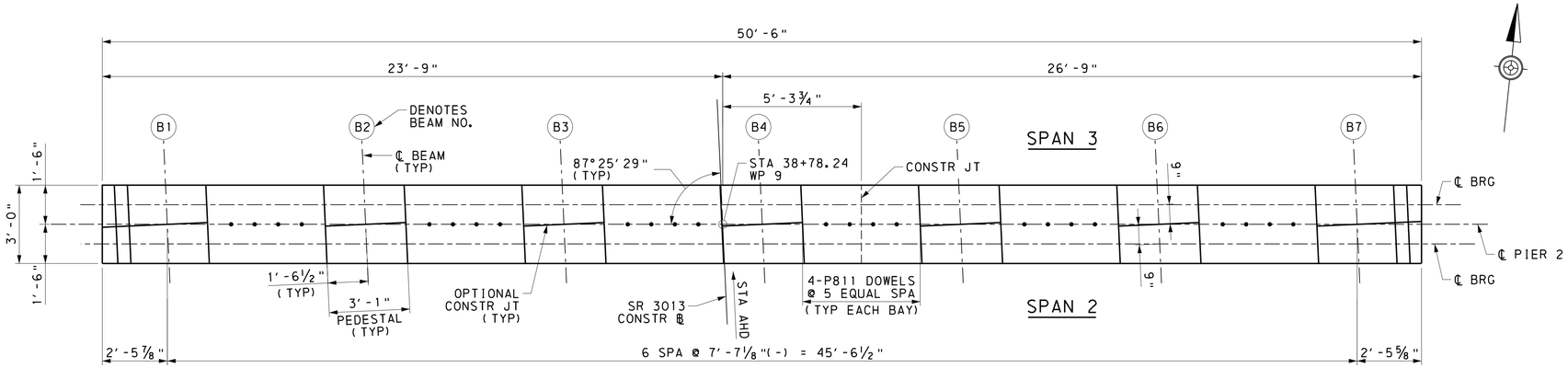

PLAN

1 0 1 2 3 FEET

BEAM SEAT ELEVATIONS							
	BEAM 1	BEAM 2	BEAM 3	BEAM 4	BEAM 5	BEAM 6	BEAM 7
SPAN 2	398.71	398.88	399.11	399.20	399.04	398.86	399.04
SPAN 3	398.71	398.89	399.12	399.21	399.05	398.87	399.05

NOTES:

1. BEAM SEAT ELEVATIONS GIVEN AT INTERSECTION OF ℄ BEAM & ℄ BRG.
2. BEAM SEATS ARE LEVEL IN TRANSVERSE AND LONGITUDINAL DIRECTIONS.

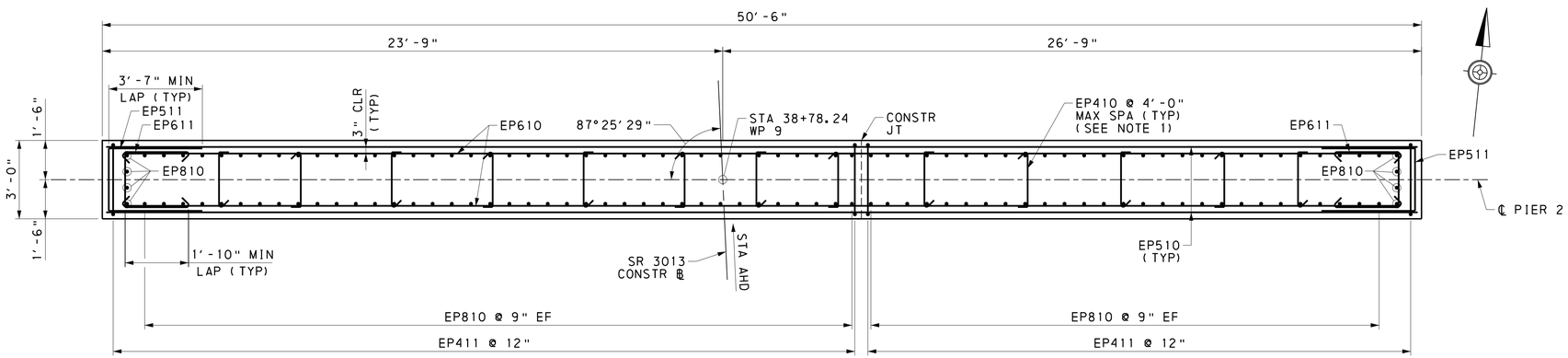

SECTION S-S

1 0 1 2 3 FEET

NOTES:

1. ALL HOOKS ON TIES MUST ENGAGE VERTICAL COLUMN REINFORCING STEEL. ALTERNATE 90° & 135° HOOKS ON CROSS TIES BOTH VERTICALLY AND HORIZONTALLY.
2. STANDPIPE AND SUPPORT BRACKETS NOT SHOWN FOR CLARITY.

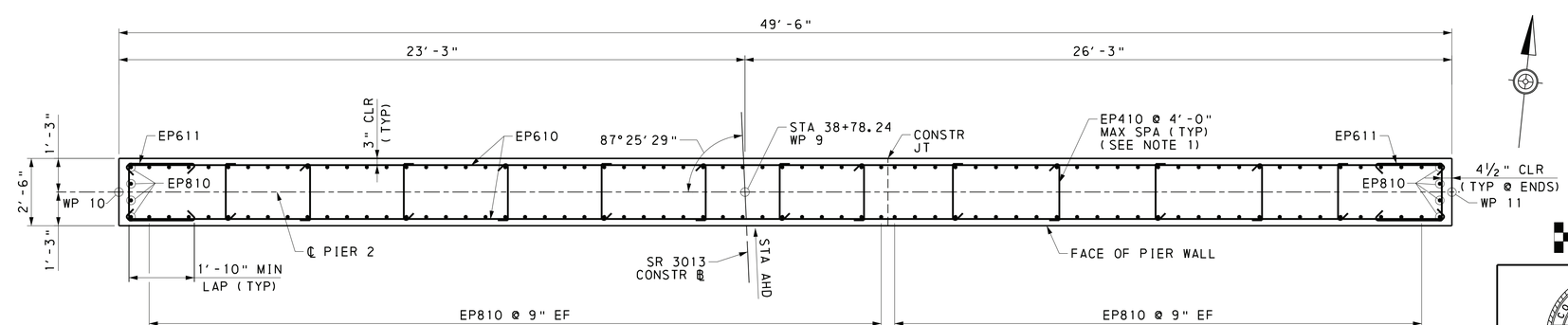

SECTION T-T

1 0 1 2 3 FEET

REFERENCES:	SHEETS:
GENERAL NOTES	4 & 5
STAKE-OUT PLAN	13
PIER 2 DRAWINGS	38 - 41
STANDPIPE DETAILS	85

Mark	Description	By	Chk'd	Recm'd	Date
REVISIONS					

SR 3013 PREVIOUSLY KNOWN AS LR 22075
BMS STR ID: 22-3013-0020-0291 MPMS/ECMS PROJ: 97828 BRKEY: 67416

HNTB

COMMONWEALTH OF PENNSYLVANIA
DEPARTMENT OF TRANSPORTATION

DAUPHIN COUNTY
SR 0083 SECTION 079
SEG 0020 OFFSET 0291
SR 3013 (29TH STREET) STA 37+78.24 OVER
SR 0083 & NORFOLK SOUTHERN RAILWAY COMPANY
3-SPAN CONTINUOUS COMPOSITE PS CONCRETE
PA BULB-TEE BEAM BRIDGE
PIER 2 PLAN

COMMONWEALTH OF PENNSYLVANIA
REGISTERED PROFESSIONAL
JUSTIN ROBERT MCCARTHY
ENGINEER
PE076998

PREPARED BY:
HNTB CORPORATION
4507 NORTH FRONT STREET
SUITE 300
HARRISBURG, PA 17110

RECOMMENDED 12-6-2022

SHEET 39 OF 93

S-39451

6/23/2022
FILENAME: 63016-s-brB1-prs22.dgn

DES: MCA	DES CKD: CEK	DWG: JTM	DWG CKD: CEK

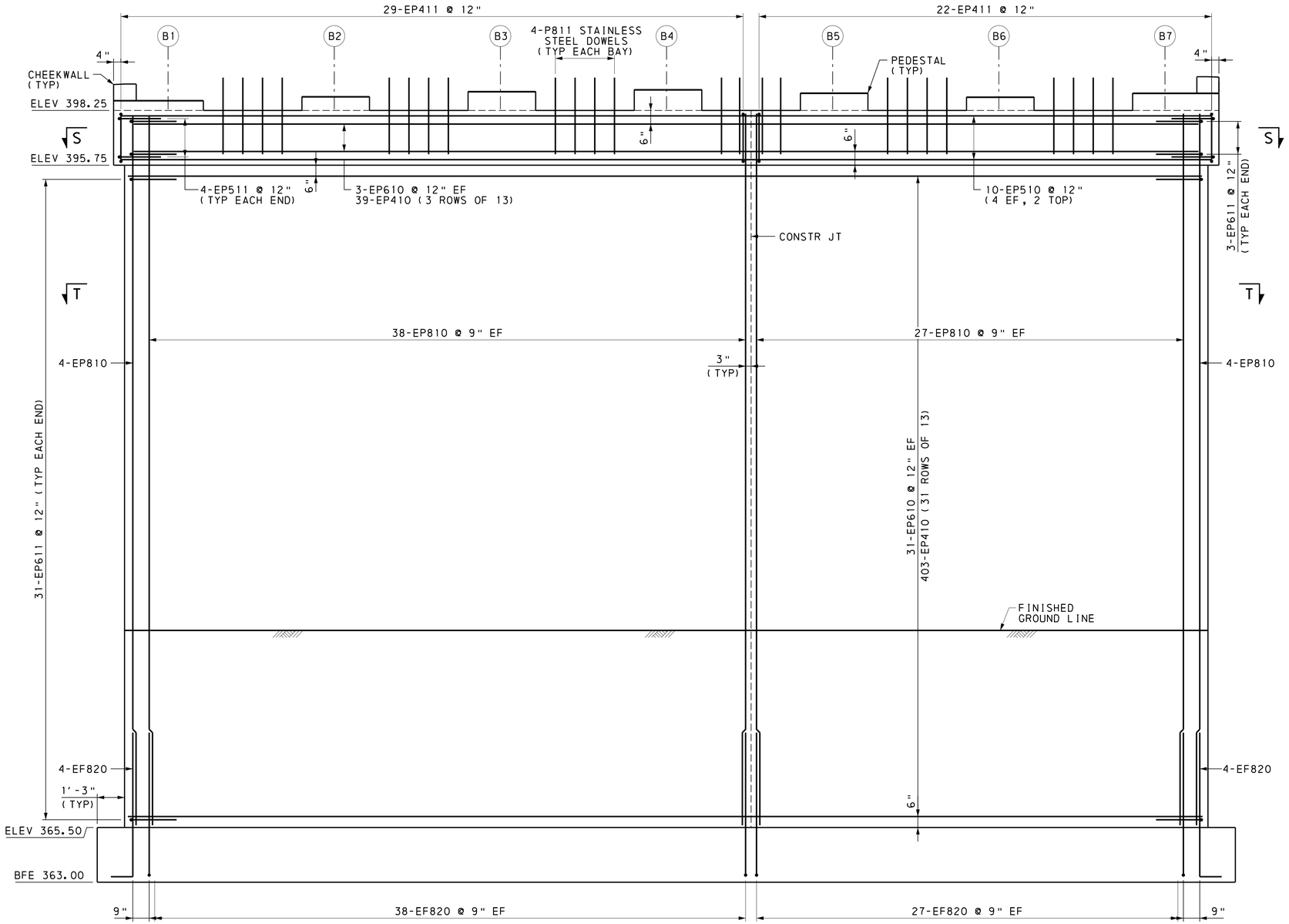

ELEVATION

1 0 1 2 3 FEET

(PEDESTAL, CHEEKWALL & FOOTING REINFORCEMENT NOT SHOWN FOR CLARITY)

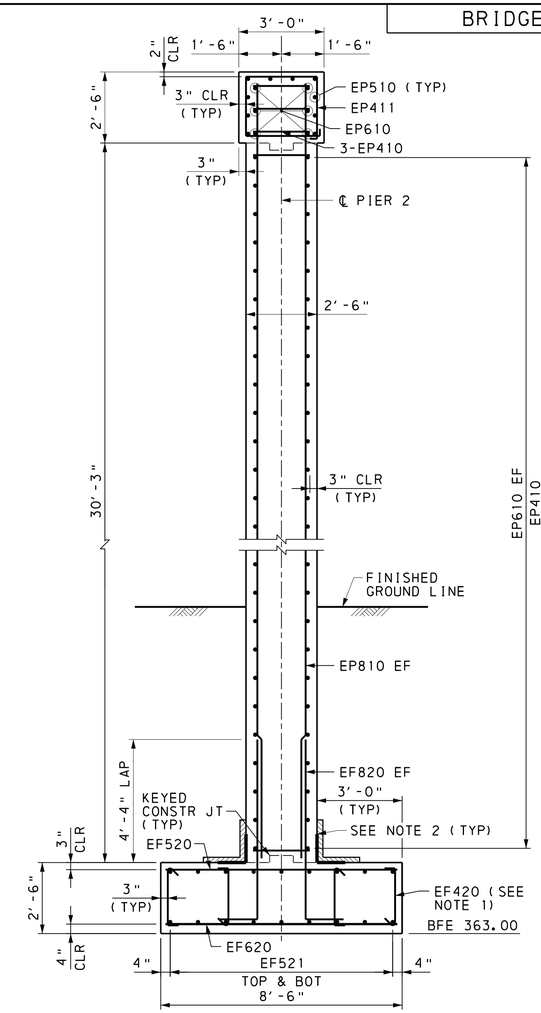

TYPICAL SECTION

1 0 1 2 3 FEET

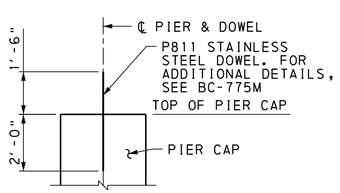

DOWEL DETAIL

1 0 1 2 3 FEET

NOTES:

1. TIE TOP AND BOTTOM MATS OF REINFORCING STEEL WITH #4 TIE BARS AT A MAXIMUM SPACING OF 4'-0" IN BOTH DIRECTIONS. PROVIDE TIE BARS WITH 90° HOOK AT ONE END AND 135° HOOK AT THE OTHER END. ALTERNATE 90° AND 135° HOOK AT TOP IN ALTERNATING TIES.
2. FOR WATERPROOFING DETAILS, SEE ATTACHMENT BC-788 MODIFIED "SPRAY-ON WATERPROOFING DETAILS".
3. STANDPIPE AND SUPPORT BRACKETS NOT SHOWN FOR CLARITY.

REFERENCES:	SHEETS:
GENERAL NOTES	4 & 5
STAKE-OUT PLAN	13
PIER 2 DRAWINGS	38 - 41
STANDPIPE DETAILS	85

Mark	Description	By	Chk'd	Recm'd	Date
REVISIONS					

SR 3013 PREVIOUSLY KNOWN AS LR 22075
BMS STR ID: 22-3013-0020-0291 MPMS/ECMS PROJ: 97828 BRKEY: 67416

HNTB

COMMONWEALTH OF PENNSYLVANIA
REGISTERED PROFESSIONAL
JUSTIN ROBERT MCCARTHY
ENGINEER
PE076998

PREPARED BY:
HNTB CORPORATION
4507 NORTH FRONT STREET
SUITE 300
HARRISBURG, PA 17110

COMMONWEALTH OF PENNSYLVANIA
DEPARTMENT OF TRANSPORTATION

DAUPHIN COUNTY
SR 0083 SECTION 079
SEG 0020 OFFSET 0291
SR 3013 (29TH STREET) STA 37+78.24 OVER
SR 0083 & NORFOLK SOUTHERN RAILWAY COMPANY

3-SPAN CONTINUOUS COMPOSITE PS CONCRETE
PA BULB-TEE BEAM BRIDGE

PIER 2 ELEVATION & SECTION

RECOMMENDED 12-6-2022

SHEET 40 OF 93

S-39451

12/2/2022
FILENAME: 63016-s-brB1-prs23.dgn

DES: MCA	DES CKD: CEK	DWG: JTM	DWG CKD: CEK

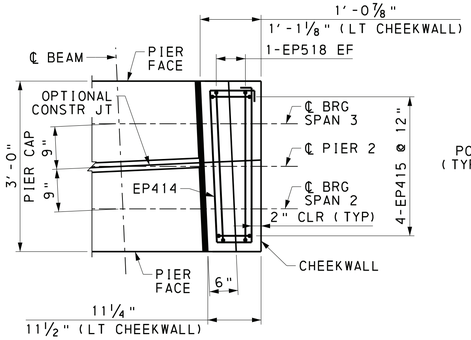

PLAN

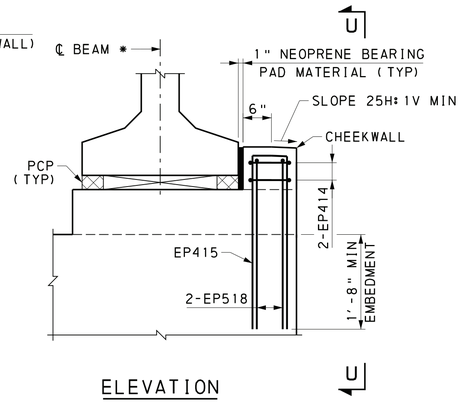

ELEVATION

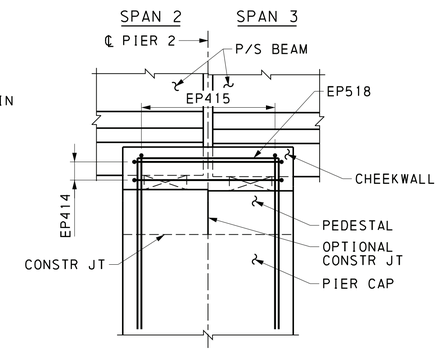

SECTION U-U

* - SPAN 2 BEAM SHOWN, SPAN 3 BEAM NOT SHOWN FOR CLARITY

CHEEKWALL DETAILS

12 0 12 INCHES

(RIGHT CHEEKWALL SHOWN, LEFT CHEEKWALL SIMILAR BY OPPOSITE HAND AND AS NOTED)

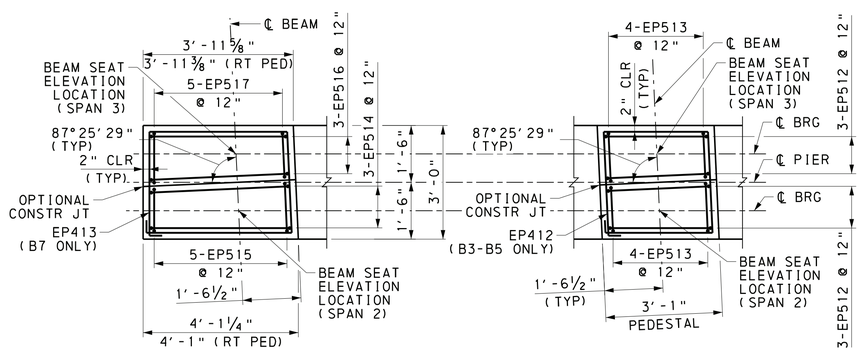

PLAN

PLAN

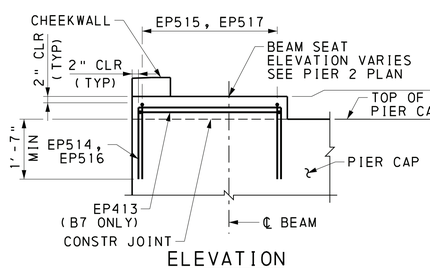

ELEVATION

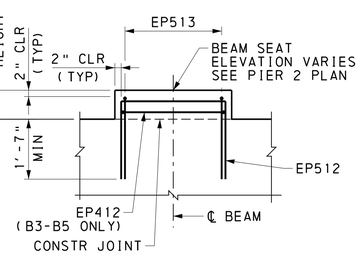

ELEVATION

EXTERIOR PEDESTAL

1 0 1 2 FEET

(LEFT PEDESTAL SHOWN, RIGHT PEDESTAL SIMILAR BY OPPOSITE HAND AND AS NOTED)

INTERIOR PEDESTAL

1 0 1 2 FEET

NOTES:

1. REFER TO PIER 1 DETAILS FOR KEYSTONE LOGO DETAILS AND LOCATION.
2. SEE BC-788M FOR WATERPROOFING DETAILS.

REFERENCES:	SHEETS:
GENERAL NOTES	4 & 5
STAKE-OUT PLAN	13
PIER 1 DETAILS	37
PIER 2 DRAWINGS	38 - 41

Mark	Description	By	Chk'd	Recm'd	Date

REVISIONS

SR 3013 PREVIOUSLY KNOWN AS LR 22075
BMS STR ID: 22-3013-0020-0291 MPMS/ECMS PROJ: 97828 BRKEY: 67416

HNTB

COMMONWEALTH OF PENNSYLVANIA
DEPARTMENT OF TRANSPORTATION

COMMONWEALTH OF PENNSYLVANIA REGISTERED PROFESSIONAL JUSTIN ROBERT MCCARTHY ENGINEER PE076998

DAUPHIN COUNTY
SR 0083 SECTION 079
SEG 0020 OFFSET 0291
SR 3013 (29TH STREET) STA 37+78.24 OVER
SR 0083 & NORFOLK SOUTHERN RAILWAY COMPANY

3-SPAN CONTINUOUS COMPOSITE PS CONCRETE
PA BULB-TEE BEAM BRIDGE

PIER 2 DETAILS

PREPARED BY:
HNTB CORPORATION
4507 NORTH FRONT STREET
SUITE 300
HARRISBURG, PA 17110

RECOMMENDED 12-6-2022

SHEET 41 OF 93

S-39451

6/23/2022
FILENAME: 63016-s-brB1-pre24.dgn

DES: MCA	DES CKD: CEK	DWG: JTM	DWG CKD: CEK

MARK	SIZE	NO REQ'D	LENGTH	TYPE	A	B	C	D	E	REMARKS
						PIER 1				
EF410	4	56	2'-8"	63	4 1/2"	1'-11"	4 1/2"			
EF510	5	53	8'-0"	STR						
EF511	5	18	51'-6"	STR						
EF610	6	104	8'-0"	STR						
EF810	8	104	7'-10"	77	6'-6"	1'-4"				
EP400	4	420	2'-9"	63	4 1/2"	2'-0"	4 1/2"			
EP401	4	51	10'-1"	2	2'-6"	2'-2"	2'-6"	2'-2"	4 1/2"	
EP402	4	5	11'-7"	113	2'-9"	2'-8"	2'-9"	2'-8"	4 1/2"	F = 1 3/8", G = 1 3/8"
EP403	4	1	13'-5 1/2"	114	3'-7 1/2"	2'-8"	3'-9"	2'-8"	4 1/2"	F = 1 3/8"
EP404	4	4	7'-4 3/4"	114	7 1/4"	2'-8"	8 1/2"	2'-8"	4 1/2"	F = 1 3/8"
EP405	4	1	4'-4 1/2"	115	8"	1'-1 1/2"	9"	1'-1"	4 1/2"	F = 3/8", G = 5/8"
EP406	4	1	4'-6"	116	8"	1'-2 3/4"	7 1/4"	1'-3"	4 1/2"	F = 5/8", G = 3/8"
EP407	4	8	6'-10 1/4" TO	31	3'-1 1/2"	7 1/4" TO	3'-1 1/2"			VARY B 2 EACH BY 1/2"
			6'-11 3/4"			8 3/4"				
EP500	5	56	49'-8"	67	5 1/2"	48'-9"				
EP501	5	56	6'-11"	104	5 1/2"	2'-0"	2'-0"			
EP502	5	10	50'-0"	STR						
EP503	5	8	9'-8"	31	3'-7"	2'-6"	3'-7"			
EP504	5	30	7'-7"	31	2'-5"	2'-8"	2'-5"			
EP505	5	40	6'-0" TO	31	2'-6"	1'-0" TO	2'-6"			VARY B 10 EACH BY 1/2"
			6'-1 1/2"			1'-1 1/2"				
EP506	5	6	8'-2" TO	31	2'-3 1/2"	3' 7" TO	2'-3 1/2"			VARY B 2 EACH BY 1/2"
			8'-3"			3'-8"				
EP507	5	10	5'-5 3/4" TO	31	2'-3"	11 3/4" TO	2'-3"			VARY B 2 EACH BY 1/2"
			5'-7 3/4"			1'-1 3/4"				
EP508	5	6	7'-6 3/4" TO	31	2'-0"	3'-6 3/4" TO	2'-0"			VARY B 2 EACH BY 1/4"
			7'-7 1/4"			3'-7 1/4"				
EP509	5	10	5'-1" TO	31	2'-0 1/2"	1'-0" TO	2'-0 1/2"			VARY B 2 EACH BY 1/2"
			5'-3"			1'-2"				
EP510	5	4	8'-9"	31	3'-1"	2'-7"	3'-1"			
EP800	8	104	27'-2"	STR						
P801	8	24	3'-6"	STR						STAINLESS STEEL DOWEL BAR
						PIER 2				
EF420	4	56	2'-8"	63	4 1/2"	1'-11"	4 1/2"			
EF520	5	53	8'-0"	STR						
EF521	5	18	51'-6"	STR						
EF620	6	104	8'-0"	STR						
EF820	8	138	7'-10"	77	6'-6"	1'-4"				
EP410	4	442	2'-9"	63	4 1/2"	2'-0"	4 1/2"			
EP411	4	51	10'-1"	2	2'-6"	2'-2"	2'-6"	2'-2"	4 1/2"	
EP412	4	3	11'-7"	113	2'-9"	2'-8"	2'-9"	2'-8"	4 1/2"	F = 1 3/8", G = 1 3/8"
EP413	4	1	13'-5 1/2"	114	3'-7 1/2"	2'-8"	3'-9"	2'-8"	4 1/2"	F = 1 3/8"
EP414	4	4	7'-4 3/4"	114	7 1/4"	2'-8"	8 1/2"	2'-8"	4 1/2"	F = 1 3/8"
EP415	4	8	6'-9 1/4" TO	31	3'-1"	7 1/4" TO	3'-1"			VARY B 2 EACH BY 1/2"
			6'-10 3/4"			8 3/4"				
EP510	5	10	50'-0"	STR						
EP511	5	8	9'-8"	31	3'-7"	2'-6"	3'-7"			
EP512	5	30	7'-4"	31	2'-4"	2'-8"	2'-4"			
EP513	5	40	5'-10" TO	31	2'-5"	1'-0" TO	2'-5"			VARY B 10 EACH BY 1/2"
			5'-11 1/2"			1'-1 1/2"				
EP514	5	6	7'-11" TO	31	2'-2"	3'-7" TO	2'-2"			VARY B 2 EACH BY 1/2"
			8'-0"			3'-8"				
EP515	5	10	5'-5 3/4" TO	31	2'-3"	11 3/4" TO	2'-3"			VARY B 2 EACH BY 1/2"
			5'-7 3/4"			1'-1 3/4"				
EP516	5	6	7'-10 3/4" TO	31	2'-2"	3'-6 3/4" TO	2'-2"			VARY B 2 EACH BY 1/4"
			7'-11 1/4"			3'-7 1/4"				
EP517	5	10	5'-6" TO	31	2'-3"	1'-0" TO	2'-3"			VARY B 2 EACH BY 1/2"
			5'-8"			1'-2"				
EP518	5	4	8'-5"	31	2'-11"	2'-7"	2'-11"			
EP610	6	68	50'-1"	67	8"	48'-9"				
EP611	6	68	8'-0"	104	8"	2'-4"	2'-0"			
EP810	8	138	32-5"	STR						
P811	8	24	3'-6"	STR						STAINLESS STEEL DOWEL BAR

NOTES:

1. "E" PREFIX IN BAR MARK DENOTES EPOXY COATED BARS.
2. ALL DIMENSIONS ARE OUT TO OUT OF BAR EXCEPT "A" & "C" ON STANDARD 135° AND 180° HOOKS, UNLESS NOTED.
3. FOR REINFORCEMENT BAR FABRICATION DETAILS, REFER TO STANDARD DRAWING BC-736M.
4. FIGURES IN CIRCLE REPRESENT BAR TYPES.
5. "J" DIMENSIONS ON 180° HOOKS ARE SHOWN ONLY WHERE NECESSARY TO RESTRICT HOOK SIZE, OTHERWISE STANDARD HOOKS ARE TO BE USED.
6. RADIUS, "R" IS TO THE INSIDE OF THE BAR.
7. REINFORCEMENT BAR SCHEDULE IS FOR INFORMATION ONLY. VERIFY INFORMATION BEFORE FABRICATION.

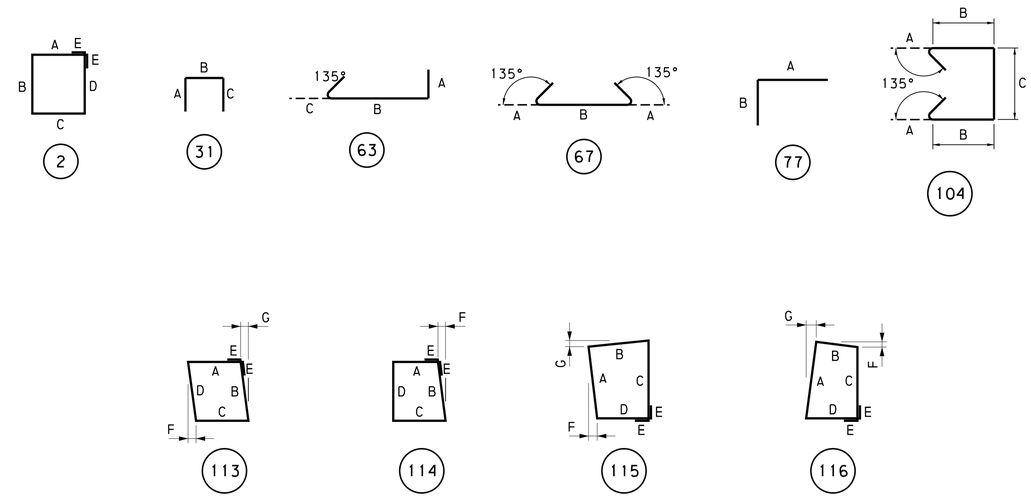

Mark	Description	By	Chk'd	Recm'd	Date

REVISIONS

SR 3013 PREVIOUSLY KNOWN AS LR 22075
BMS STR ID: 22-3013-0020-0291 MPMS/ECMS PROJ: 97828 BRKEY: 67416

HNTB

COMMONWEALTH OF PENNSYLVANIA
DEPARTMENT OF TRANSPORTATION

DAUPHIN COUNTY
SR 0083 SECTION 079
SEG 0020 OFFSET 0291
SR 3013 (29TH STREET) STA 37+78.24 OVER
SR 0083 & NORFOLK SOUTHERN RAILWAY COMPANY
3-SPAN CONTINUOUS COMPOSITE PS CONCRETE
PA BULB-TEE BEAM BRIDGE
PIER 1 & 2 REBAR SCHEDULE

COMMONWEALTH OF PENNSYLVANIA
REGISTERED PROFESSIONAL
JUSTIN ROBERT MCCARTHY
ENGINEER
PE076998

PREPARED BY:
HNTB CORPORATION
4507 NORTH FRONT STREET
SUITE 300
HARRISBURG, PA 17110

RECOMMENDED 12-6-2022

SHEET 42 OF 93

S-39451

REFERENCES:

GENERAL NOTES	4 & 5
PIER 1 & 2 DRAWINGS	34 - 41

6/23/2022
FILENAME: 63016-s-brB1-bar03.dgn

DES: MCA	DES CKD: CEK	DWG: JTM	DWG CKD: CEK

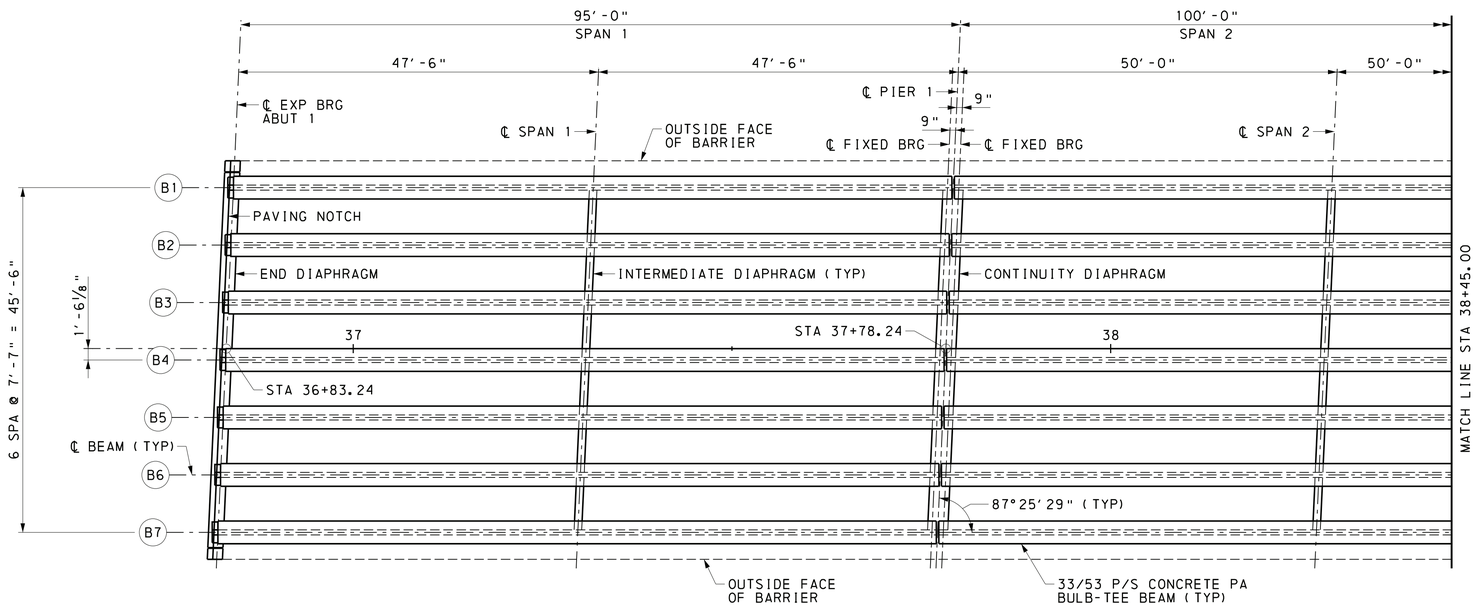

FRAMING PLAN

5 0 5 10 FEET

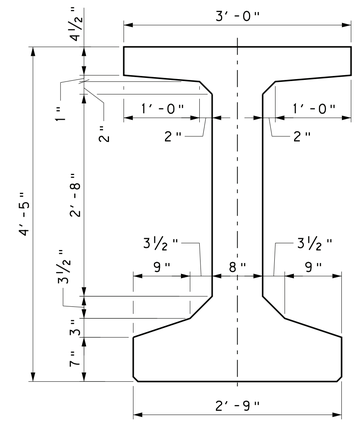

PA BULB-TEE BEAM, 33/53

6 0 6 12 INCHES

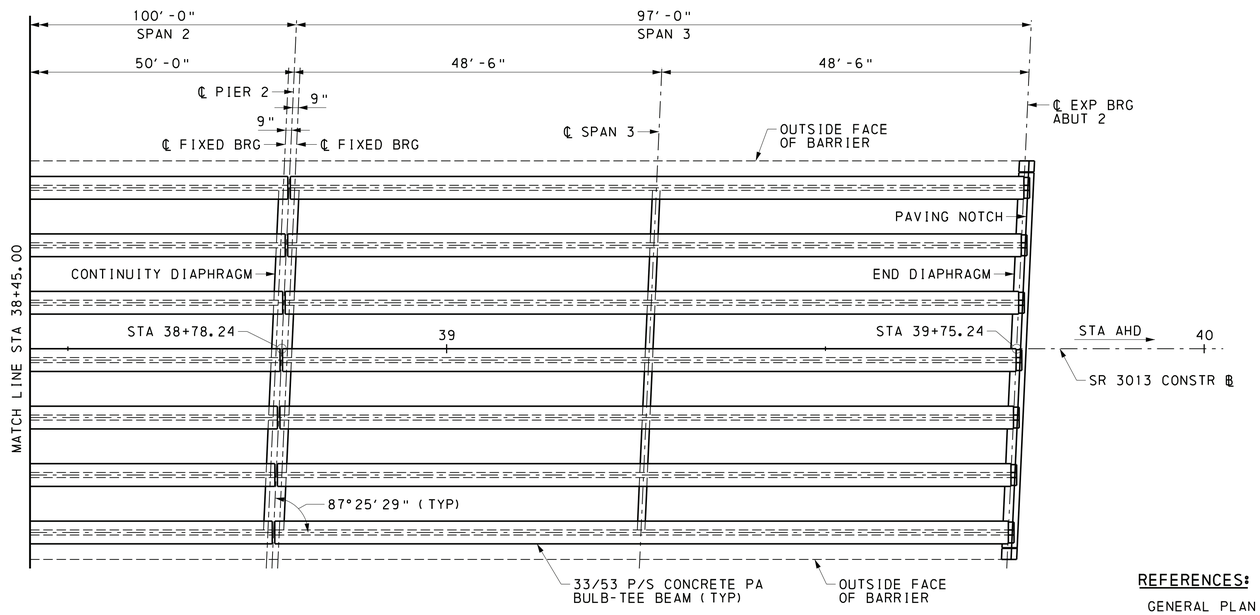

FRAMING PLAN

5 0 5 10 FEET

REFERENCES:	SHEETS:
GENERAL PLAN	1
GENERAL NOTES	4 & 5
BEAM DETAILS	44 - 46
SLAB PLANS	48 & 49
SLAB TYPICAL SECTIONS	50 & 51
DIAPHRAGM DETAILS	54 - 56

Mark	Description	By	Chk'd	Recm'd	Date

REVISIONS

SR 3013 PREVIOUSLY KNOWN AS LR 22075
BMS STR ID: 22-3013-0020-0291 MPMS/ECMS PROJ: 97828 BRKEY: 67416

HNTB

COMMONWEALTH OF PENNSYLVANIA
REGISTERED PROFESSIONAL
JUSTIN ROBERT MCCARTHY
ENGINEER
PE076998

COMMONWEALTH OF PENNSYLVANIA
DEPARTMENT OF TRANSPORTATION

DAUPHIN COUNTY
SR 0083 SECTION 079
SEG 0020 OFFSET 0291
SR 3013 (29TH STREET) STA 37+78.24 OVER
SR 0083 & NORFOLK SOUTHERN RAILWAY COMPANY

3-SPAN CONTINUOUS COMPOSITE PS CONCRETE
PA BULB-TEE BEAM BRIDGE

FRAMING PLAN

PREPARED BY:
HNTB CORPORATION
4507 NORTH FRONT STREET
SUITE 300
HARRISBURG, PA 17110

RECOMMENDED 12-6-2022

SHEET 43 OF 93

S-39451

6/23/2022
FILENAME: 63016-s-brB1-frp01.dgn

DES: MCA	DES CKD: JMA	DWG: SMZ	DWG CKD: JMA

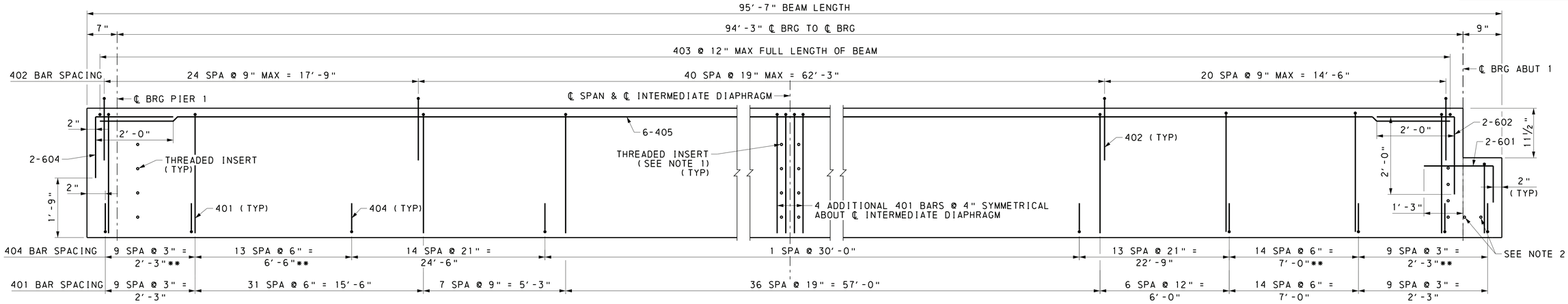

** MATCH BAR SPACING WITH 401

PA BULB-TEE BEAM ELEVATION (SPAN 1)

NOT TO SCALE

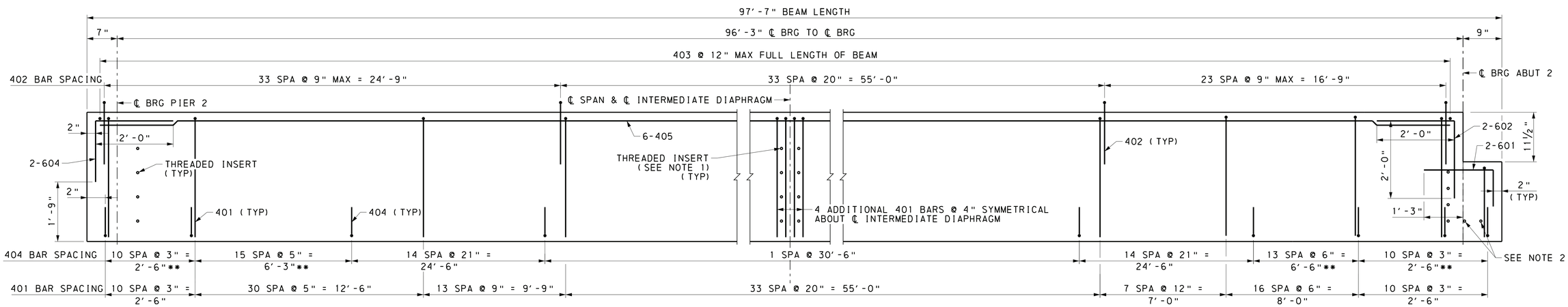

** MATCH BAR SPACING WITH 401

PA BULB-TEE BEAM ELEVATION (SPAN 3)

NOT TO SCALE

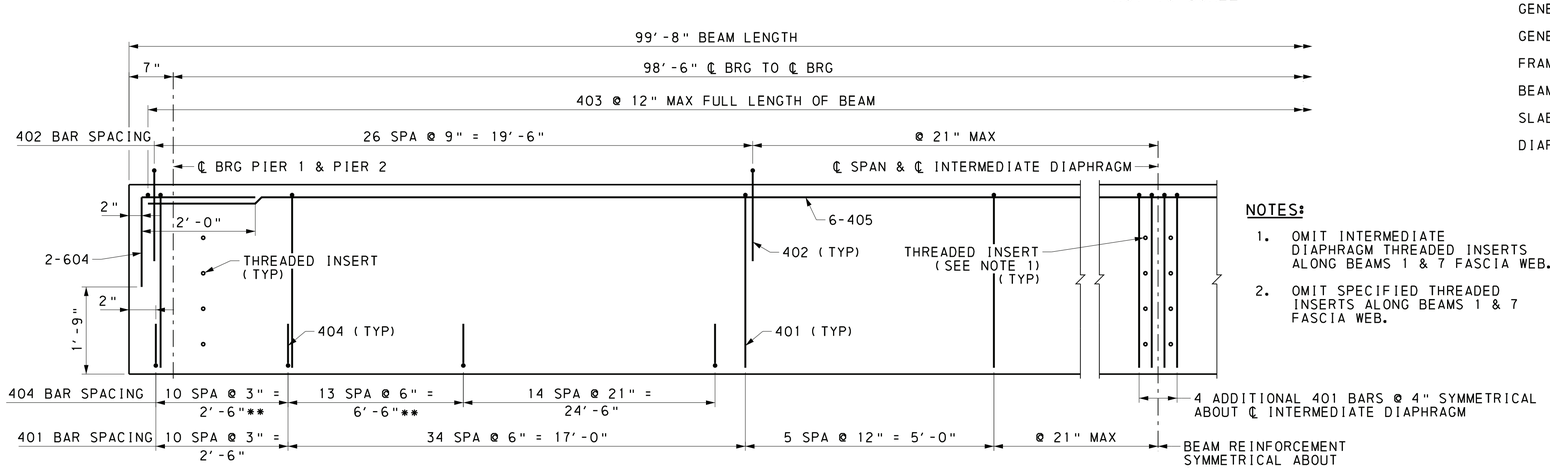

** MATCH BAR SPACING WITH 401

PA BULB-TEE BEAM ELEVATION (SPAN 2)

NOT TO SCALE

NOTES:

1. OMIT INTERMEDIATE DIAPHRAGM THREADED INSERTS ALONG BEAMS 1 & 7 FASCIA WEB.
2. OMIT SPECIFIED THREADED INSERTS ALONG BEAMS 1 & 7 FASCIA WEB.

REFERENCES:	SHEETS:
GENERAL PLAN	1
GENERAL NOTES	4 & 5
FRAMING PLAN	43
BEAM DETAILS	44 - 46
SLAB DRAWINGS	48 & 49
DIAPHRAGM DETAILS	54 - 56

Mark	Description	By	Chk'd	Recm'd	Date
REVISIONS					

SR 3013 PREVIOUSLY KNOWN AS LR 22075
BMS STR ID: 22-3013-0020-0291 MPMS/ECMS PROJ: 97828 BRKEY: 67416

HNTB

COMMONWEALTH OF PENNSYLVANIA
REGISTERED PROFESSIONAL
JUSTIN ROBERT MCCARTHY
ENGINEER
PE076998

COMMONWEALTH OF PENNSYLVANIA
DEPARTMENT OF TRANSPORTATION

DAUPHIN COUNTY
SR 0083 SECTION 079
SEG 0020 OFFSET 0291
SR 3013 (29TH STREET) STA 37+78.24 OVER
SR 0083 & NORFOLK SOUTHERN RAILWAY COMPANY
3-SPAN CONTINUOUS COMPOSITE PS CONCRETE
PA BULB-TEE BEAM BRIDGE
BEAM DETAILS 1

PREPARED BY:
HNTB CORPORATION
4507 NORTH FRONT STREET
SUITE 300
HARRISBURG, PA 17110

RECOMMENDED 12-6-2022

S-39451

DES: MCA | DES CKD: JMA | DWG: SMZ | DWG CKD: JMA

6/23/2022
FILENAME 63016-s-br81-bem01.dgn

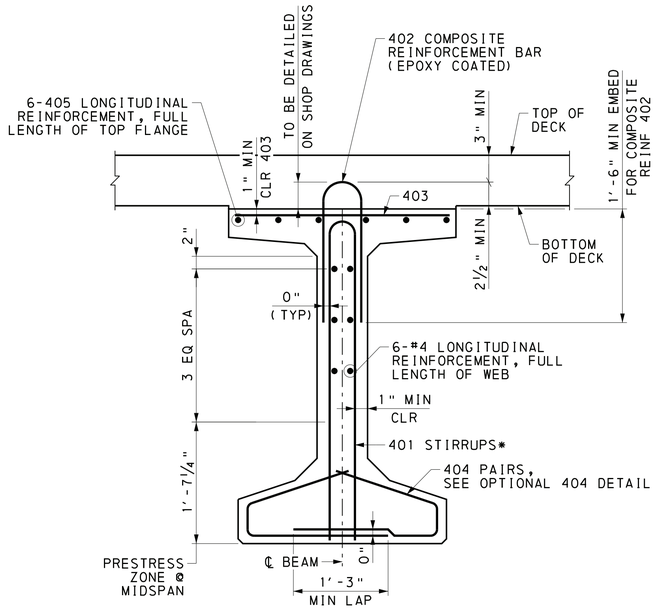

* 401 MAY BE UTILIZED BY FABRICATOR TO REPLACE 402 COMPOSITE REINFORCEMENT. ALL 401 REINFORCEMENT BARS PROJECTING INTO THE DECK SLAB MUST BE EPOXY COATED FOR ENTIRE LENGTH.

PA BULB-TEE TYPICAL SECTION

6 0 6 12 INCHES

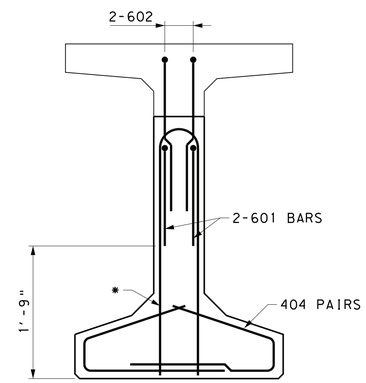

* MODIFY 401 BAR, AS REQUIRED, TO ACCOMMODATE BEAM NOTCH

PA BULB-TEE NOTCH REINF END VIEW

6 0 6 12 INCHES

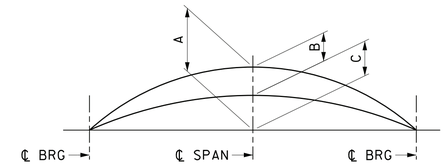

BEAM CAMBER DIAGRAM

A = ESTIMATED PRESTRESS CAMBER LESS DEFLECTION DUE TO DEAD LOAD OF BEAM TIMES CREEP FACTOR. (CHECK IN FIELD)

B = DEFLECTION DUE TO ALL DEAD LOAD EXCEPT BEAM WEIGHT AND FUTURE WEARING SURFACE.

C = A-B = NET FINAL CAMBER.

1. VARY THE THICKNESS OF THE CONCRETE HAUNCH TO COMPENSATE FOR ANY DEVIATIONS OF THE ACTUAL CAMBER FROM THE DESIGN CAMBER.
2. NEGATIVE HAUNCHES ARE NOT ALLOWED.
3. A, B AND C ARE THEORETICAL VALUES AND MAY VARY WITH ACTUAL CONCRETE STRENGTH (AGE), VARIOUS PRESTRESSING CONDITIONS, CREEP FACTOR AND PRESTRESS LOSSES.
4. A CREEP FACTOR EQUAL TO 1.6 AND P/S LOSS EQUAL TO 10% WAS USED.

BEAM NOTES:

1. PROVIDE MATERIAL AND WORK QUALITY IN ACCORDANCE WITH THE APPROPRIATE SPECIFICATIONS AS OUTLINED IN THE PENNSYLVANIA DEPARTMENT OF TRANSPORTATION PUBLICATION 408.
2. EPOXY COAT ALL REINFORCEMENT WHICH PROTRUDES INTO BRIDGE DECK FROM TOP OF BEAMS.
3. SHOW DESIGN LENGTH AND CASTING LENGTH ON SHOP DRAWINGS.
4. SHOW PLAN, ELEVATION, SECTIONS AND ALL REINFORCEMENT DETAILS ON SHOP DRAWINGS.
5. SHOW ANY MODIFICATIONS TO REINFORCEMENT SPLICE AND BENDING DETAILS ON SHOP DRAWINGS.
6. SHOW THE FOLLOWING DATA ON THE SHOP DRAWINGS:
   1) THE SIZE AND LOCATION OF THE TEMPORARY STORAGE SUPPORTS.
   2) THE TYPE AND LOCATION OF THE BRACING AND TEMPORARY SUPPORTS USED FOR THE TRANSPORTATION AND ERECTION OF THE BEAMS.
7. END ZONE REINFORCEMENT MAY BE INCREASED BY FABRICATOR TO REFLECT FABRICATOR'S EXPERIENCE AND/OR TO CONTROL CRACKING.
8. FABRICATOR TO CHECK STABILITY FOR HANDLING AND TRANSPORTING OF THE MEMBERS.
9. MIN COVER: STIRRUPS - 1" MIN
   ALL OTHERS - 1½" MIN

CAMBER TABLE (INCHES)

	SPAN/BEAM	A	B	C
SPAN 1	BEAM 1 & 7	3.31	1.53	1.78
	BEAM 2	3.31	1.37	1.94
	BEAM 3-5	3.31	0.99	2.32
	BEAM 6	3.31	1.30	2.01
SPAN 2	BEAM 1 & 7	3.46	2.06	1.40
	BEAM 2	3.46	1.77	1.69
	BEAM 3-5	3.46	1.28	2.18
	BEAM 6	3.46	1.67	1.79
SPAN 3	BEAM 1 & 7	3.38	1.87	1.51
	BEAM 2	3.38	1.61	1.77
	BEAM 3-5	3.38	1.17	2.21
	BEAM 6	3.38	1.53	1.85

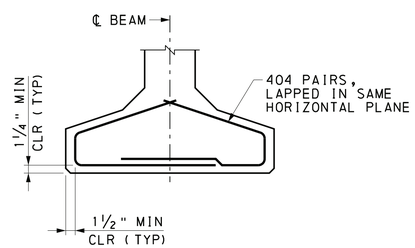

TYPICAL STRAND CONFINEMENT

6 0 6 12 INCHES

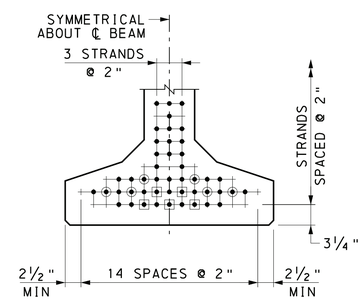

- • BONDED STRAND
- ⊙ DEBONDED STRAND FROM ℄ BRG TO 3'-0"
- ⊡ DEBONDED STRAND FROM ℄ BRG TO 6'-0"

TYPICAL STRAND PATTERN (SPANS 1-3)

6 0 6 12 INCHES

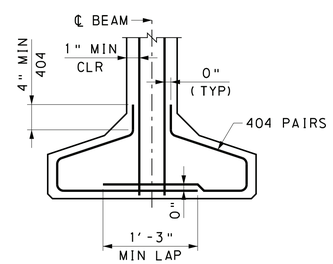

OPTIONAL 404 DETAIL

6 0 6 12 INCHES

REFERENCES:	SHEETS:
GENERAL PLAN	1
GENERAL NOTES	4 & 5
FRAMING PLAN	43
BEAM DETAILS	44 - 46
SLAB DRAWINGS	48 & 49
DIAPHRAGM DETAILS	54 - 56

Mark	Description	By	Chk'd	Recm'd	Date
REVISIONS					

SR 3013 PREVIOUSLY KNOWN AS LR 22075
BMS STR ID: 22-3013-0020-0291 MPMS/ECMS PROJ: 97828 BRKEY: 67416

HNTB

COMMONWEALTH OF PENNSYLVANIA
DEPARTMENT OF TRANSPORTATION

DAUPHIN COUNTY
SR 0083 SECTION 079
SEG 0020 OFFSET 0291
SR 3013 (29TH STREET) STA 37+78.24 OVER
SR 0083 & NORFOLK SOUTHERN RAILWAY COMPANY
3-SPAN CONTINUOUS COMPOSITE PS CONCRETE
PA BULB-TEE BEAM BRIDGE
BEAM DETAILS 2

COMMONWEALTH OF PENNSYLVANIA
REGISTERED PROFESSIONAL
JUSTIN ROBERT MCCARTHY
ENGINEER
PE076998

PREPARED BY:
HNTB CORPORATION
4507 NORTH FRONT STREET
SUITE 300
HARRISBURG, PA 17110

RECOMMENDED 12-6-2022

SHEET 45 OF 93

S-39451

6/23/2022
FILENAME: 63016-s-brB1-bem02.dgn

DES: MCA	DES CKD: JMA	DWG: SMZ	DWG CKD: JMA

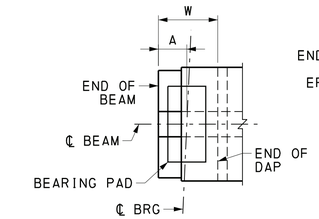

PLAN
(ABUTMENT 1 SHOWN, ABUTMENT 2 SIMILAR)
(PIERS 1 & 2 SIMILAR WITHOUT BEAM NOTCH)

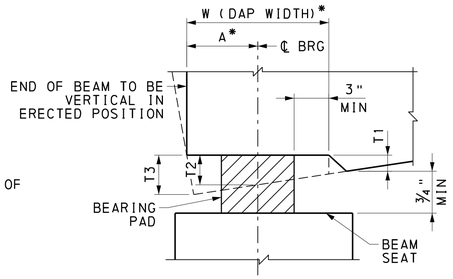

SECTION AT LOW END OF BEAM
* MEASURED ALONG ℄ BEAM

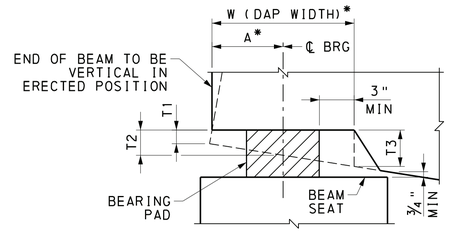

SECTION AT HIGH END OF BEAM
* MEASURED ALONG ℄ BEAM

BEAM DAP DETAILS

NOT TO SCALE

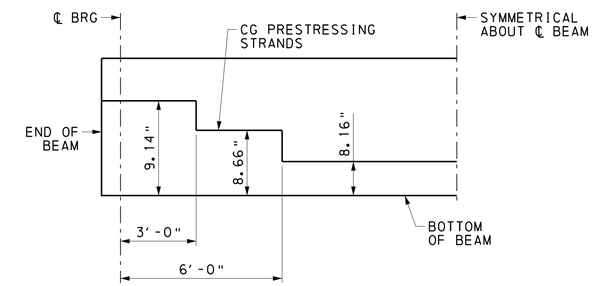

DEBONDING DIAGRAM

NOT TO SCALE

DAP DIMENSIONS		
LOCATION/DIMENSION		BEAM 1-7
ABUT 1 (LOW END)	W	18 1/2"
	A	9"
	T1	1/4"
	T2	7/8"
	T3	1 7/16"
PIER 1 NEAR (HIGH END)	W	15"
	A	7"
	T1	1/4"
	T2	5/8"
	T3	1"
PIER 1 FAR (LOW END)	W	15"
	A	7"
	T1	1/4"
	T2	5/8"
	T3	15/16"
PIER 2 NEAR (HIGH END)	W	15"
	A	7"
	T1	1/4"
	T2	1/2"
	T3	3/4"
PIER 2 FAR (HIGH END)	W	15"
	A	7"
	T1	1/4"
	T2	5/16"
	T3	3/8"
ABUT 2 (LOW END)	W	18 1/2"
	A	9"
	T1	1/4"
	T2	7/16"
	T3	5/8"

BEAM DAP NOTES:

1. T1 IS DAP THICKNESS AT END OF BEAM FOR HIGHER END OF BEAM AND DAP THICKNESS AT BEGINNING OF DAP FOR LOWER END OF BEAM. T1 MINIMUM IS 1/4".
2. T2 IS DAP THICKNESS AT CENTERLINE OF BEARING.
3. T3 IS DEFINED AS THE DAP THICKNESS BASED ON THE SLOPE OF THE BEAM DUE TO THE GRADE AND CAMBER.
4. BEAM SEAT AND BOTTOM OF BEAM BEARING AREA REQUIREMENTS AS PER DESIGN MANUAL PART 4, SECTION 14.7.6.3.9dP.
5. MAXIMUM GRADE FOR USE OF DAPPING IS BASED ON LIMITING THE MAXIMUM DAP THICKNESS TO 1 1/2" AND MAINTAINING 1" MINIMUM CONCRETE COVER ON CONFINEMENT REINFORCEMENT IN THE PROPOSED BEAM DAPPING AREA.
6. FOR BEAM DAPPING, A MINIMUM CLEARANCE OF 3/4" MUST BE PROVIDED BETWEEN THE BOTTOM OF THE BEAM (WITHOUT CONSIDERATION OF THE DAP) AND THE TOP OF BEAM SEAT TO ENSURE INSPECTABILITY OF BEARING PAD.
7. PARTIAL-WIDTH BEAM DAPS ARE NOT PERMITTED.
8. THE MAXIMUM DAP THICKNESS IS 1 1/2".
9. ENSURE THAT ALL CONCRETE COVER REQUIREMENTS ON STEEL CONFINEMENT REINFORCEMENT AND PRESTRESSING STRANDS ARE SATISFIED WHEN USING BEAM DAPS TO MODIFY THE BOTTOM OF BEAM AREA.

PRESTRESSING DATA:

PRESTRESSED BEAM SIZE = 33/53 PA BULB-TEE.

CONCRETE STRENGTH AT STRAND RELEASE = 8500 PSI.

CONCRETE STRENGTH AT 28 DAYS (F'C) = 10000 PSI.

USE ONLY 0.6" DIA OVERSIZED GRADE 270, LOW RELAXATION STRANDS FOR AS-DESIGNED BEAMS.

TOTAL NUMBER OF STRANDS = 46

JACKING PRESTRESS STRESS = 202500 PSI.

JACKING PRESTRESS FORCE PER BEAM = 2021.4 KIPS

BEAM SECTION PROPERTIES			
SECTION PROPERTY	BASIC BEAM	COMPOSITE BEAM, TRANSFORMED PROPERTIES*	
		BEAM 1 & 7	BEAM 2-6
AREA - IN²	805.25	-	-
EFF. WIDTH - IN	-	88.12	91.00
I - IN⁴	291,741	598,017	604,540
Y TOP SLAB - IN	-	26.22	25.99
Y TOP BEAM - IN	28.50	18.72	18.49
Y BOT BEAM - IN	24.50	34.28	34.51
S TOP SLAB - IN³	-	22,804	23,259
S TOP BEAM - IN³	10,238	31,939	32,692
S BOT BEAM - IN³	11,906	17,447	17,519

* PROPERTIES DO NOT INCLUDE THE HAUNCH HEIGHT. PROPERTIES TAKEN AT ℄ SPAN.

REFERENCES:	SHEETS:
GENERAL PLAN	1
GENERAL NOTES	4 & 5
FRAMING PLAN	43
BEAM DETAILS	44 - 46
SLAB DRAWINGS	48 & 49
DIAPHRAGM DETAILS	54 - 56

Mark	Description	By	Chk'd	Recm'd	Date

REVISIONS

SR 3013 PREVIOUSLY KNOWN AS LR 22075
BMS STR ID: 22-3013-0020-0291 MPMS/ECMS PROJ: 97828 BRKEY: 67416

HNTB

COMMONWEALTH OF PENNSYLVANIA
REGISTERED PROFESSIONAL
JUSTIN ROBERT MCCARTHY
ENGINEER
PE076998

COMMONWEALTH OF PENNSYLVANIA
DEPARTMENT OF TRANSPORTATION

DAUPHIN COUNTY
SR 0083 SECTION 079
SEG 0020 OFFSET 0291
SR 3013 (29TH STREET) STA 37+78.24 OVER
SR 0083 & NORFOLK SOUTHERN RAILWAY COMPANY
3-SPAN CONTINUOUS COMPOSITE PS CONCRETE
PA BULB-TEE BEAM BRIDGE
BEAM DETAILS 3

PREPARED BY:
HNTB CORPORATION
4507 NORTH FRONT STREET
SUITE 300
HARRISBURG, PA 17110

RECOMMENDED 12-6-2022

SHEET 46 OF 93

S-39451

6/23/2022
FILENAME: 63016-s-brB1-bem03.dgn

DES: MCA | DES CKD: JMA | DWG: SMZ | DWG CKD: JMA

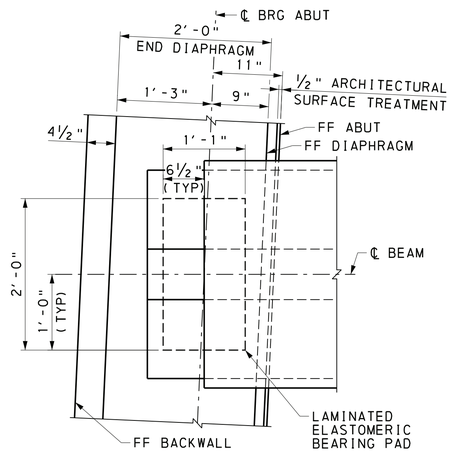

ABUTMENT 1
(ABUTMENT 2 SIMILAR)

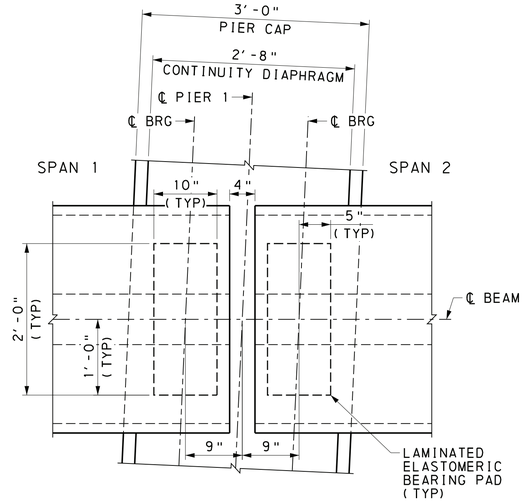

PIER 1
(PIER 2 SIMILAR)
(PEDESTAL NOT SHOWN FOR CLARITY)

ELASTOMERIC BEARING PAD PLAN

6 0 6 12 INCHES

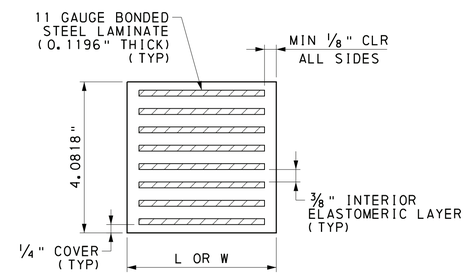

ABUTMENT 1 & 2

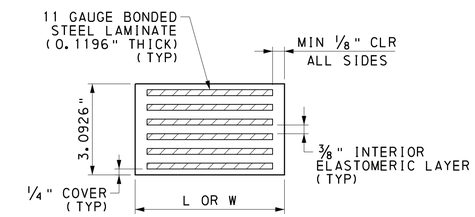

PIER 1 & 2

ELASTOMERIC BEARING PAD TYPICAL SECTIONS

NOT TO SCALE

NOTES:

1. SMOOTH CUT AND DEBURR METAL SHIMS.
2. GRIT BLAST AND DEGREASE METAL SHIMS.
3. MANUFACTURE ALL BEARINGS IN ACCORDANCE WITH THE COMMONWEALTH OF PENNSYLVANIA DEPARTMENT OF TRANSPORTATION PLANS AND SPECIFICATIONS (PUB. 408) SECTION 1113.
4. ALL BEARING PADS ARE TO BE MOLDED TO DESIGN DIMENSIONS. CUTTING TO SIZE AFTER FABRICATION IS PROHIBITED.
5. PROVIDE NEOPRENE 50 +/-5 DUROMETER.
6. PROVIDE MINIMUM LOW-TEMPERATURE NEOPRENE GRADE 3.
7. PROVIDE INTERNAL SHIMS AS PER ASTM A36 GRADE 36.
8. VULCANIZE PATCH PIN GROOVES.
9. FABRICATOR MAY USE CONTRACT DRAWINGS TO FABRICATE BEARING PADS.
10. FOR ADDITIONAL BEARING PAD DETAILS AND STANDARD BEARING DETAILS AND NOTES, SEE BC-755M.
11. PAYMENT FOR BEARING PADS IS CONSIDERED INCIDENTAL TO THE PRESTRESSED CONCRETE PA BULB-TEE BEAMS.

DESIGN CRITERIA:

1. CONSTRUCTION TOLERANCE ABOUT TRANSVERSE AXIS OF PAD = 0.003 RADIANS
2. CONSTRUCTION TOLERANCE ABOUT LONGITUDINAL AXIS OF PAD = 0.000 RADIANS

ELASTOMERIC BEARING PADS

LOCATION	BEARING TYPE	ITEM DESCRIPTION	SIZE (T x L x W)	NUMBER REQUIRED
ABUT 1	EXPANSION	LAMINATED PADS	4.0818" x 13" x 2'-0"	7
PIER 1	FIXED	LAMINATED PADS	3.0926" x 10" x 2'-0"	14
PIER 2	FIXED	LAMINATED PADS	3.0926" x 10" x 2'-0"	14
ABUT 2	EXPANSION	LAMINATED PADS	4.0818" x 13" x 2'-0"	7

REFERENCES:	SHEETS:
GENERAL NOTES	1
FRAMING PLAN	43
BEAM DETAILS	44 - 46
DIAPHRAGM SHEETS	54 - 56

Mark	Description	By	Chk'd	Recm'd	Date

REVISIONS

SR 3013 PREVIOUSLY KNOWN AS LR 22075
BMS STR ID: 22-3013-0020-0291 MPMS/ECMS PROJ: 97828 BRKEY: 67416

HNTB

COMMONWEALTH OF PENNSYLVANIA
REGISTERED PROFESSIONAL
JUSTIN ROBERT MCCARTHY
ENGINEER
PE076998

COMMONWEALTH OF PENNSYLVANIA
DEPARTMENT OF TRANSPORTATION

DAUPHIN COUNTY
SR 0083 SECTION 079
SEG 0020 OFFSET 0291
SR 3013 (29TH STREET) STA 37+78.24 OVER
SR 0083 & NORFOLK SOUTHERN RAILWAY COMPANY
3-SPAN CONTINUOUS COMPOSITE PS CONCRETE
PA BULB-TEE BEAM BRIDGE
BEARING DETAILS

PREPARED BY:
HNTB CORPORATION
4507 NORTH FRONT STREET
SUITE 300
HARRISBURG, PA 17110

RECOMMENDED 12-6-2022

S-39451

6/23/2022
FILENAME: 63016-s-brB1-brg01.dgn

DES: MCA | DES CKD: JMA | DWG: SMZ | DWG CKD: JMA

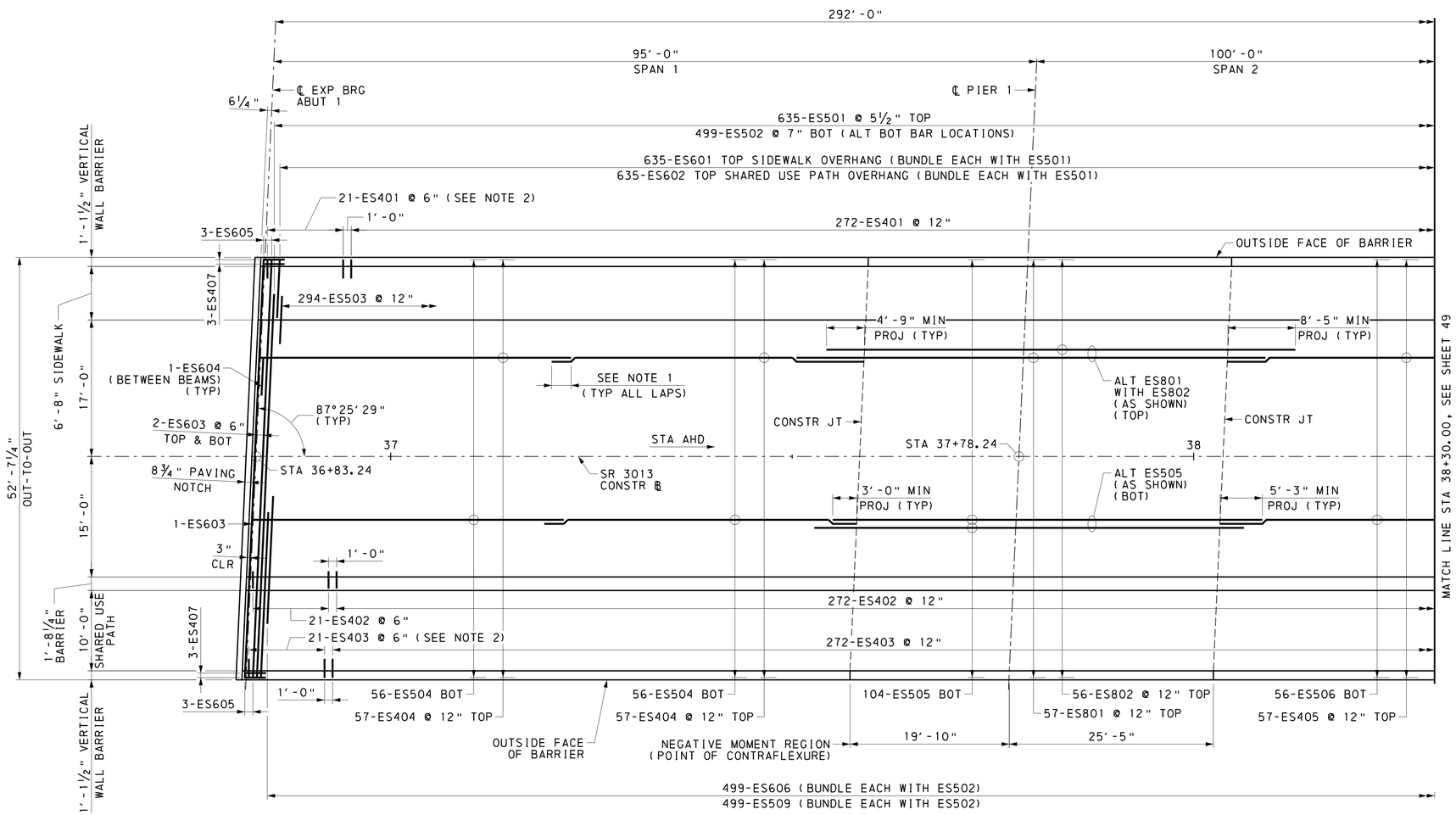

SLAB PLAN

2 0 4 8 FEET

NOTES:

1. DECK SLAB LAP SPLICE LENGTH:
   #4 BARS - 2'-5"
   #5 BARS - 3'-0"
   #6 BARS - 3'-7"
2. PROVIDE ONE ADDITIONAL ES401 OR ES403 BAR ON EACH SIDE OF BARRIER LIGHTING BLOCKOUT. ADJUST REINFORCEMENT AS REQUIRED TO ACCOMMODATE PLACEMENT OF JUNCTION BOXES AND LIGHTING BLOCKOUTS.

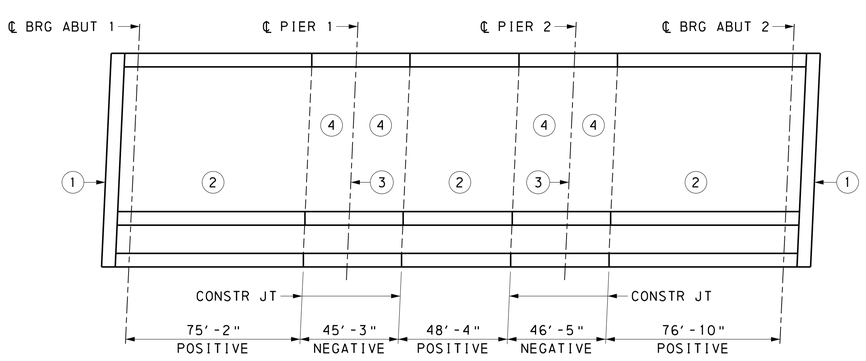

DECK PLACEMENT SEQUENCE

NOT TO SCALE

DECK PLACEMENT SEQUENCE NOTES:

1. CAST INTERMEDIATE DIAPHRAGMS, SHEAR BLOCKS BETWEEN BEAMS AND END DIAPHRAGMS AT ABUTMENTS.
2. CAST SLAB IN POSITIVE MOMENT REGIONS.
3. CAST CONTINUITY DIAPHRAGMS AT PIERS.
4. CAST SLAB IN NEGATIVE MOMENT REGIONS 2 HOURS MINIMUM AFTER THE PLACEMENT OF CONTINUITY DIAPHRAGMS.

AN ALTERNATE DECK PLACEMENT SEQUENCE MAY BE USED IF PRIOR APPROVAL IS GRANTED BY THE REPRESENTATIVE.

LEGEND:

(X) CONCRETE POUR SEQUENCE NUMBER

REFERENCES:	SHEETS:
GENERAL PLAN	1
GENERAL NOTES	4 & 5
SLAB PLAN 2	49
SLAB TYPICAL SECTIONS	50 & 51
BARRIER & SIDEWALK DETAILS	52 & 53
DIAPHRAGM DETAILS	54 - 56

Mark	Description	By	Chk'd	Recm'd	Date

REVISIONS

SR 3013 PREVIOUSLY KNOWN AS LR 22075
BMS STR ID: 22-3013-0020-0291 MPMS/ECMS PROJ: 97828 BRKEY: 67416

HNTB

COMMONWEALTH OF PENNSYLVANIA REGISTERED PROFESSIONAL JUSTIN ROBERT MCCARTHY ENGINEER PE076998

COMMONWEALTH OF PENNSYLVANIA
DEPARTMENT OF TRANSPORTATION

DAUPHIN COUNTY
SR 0083 SECTION 079
SEG 0020 OFFSET 0291
SR 3013 (29TH STREET) STA 37+78.24 OVER
SR 0083 & NORFOLK SOUTHERN RAILWAY COMPANY
3-SPAN CONTINUOUS COMPOSITE PS CONCRETE
PA BULB-TEE BEAM BRIDGE
SLAB PLAN 1

PREPARED BY:
HNTB CORPORATION
4507 NORTH FRONT STREET
SUITE 300
HARRISBURG, PA 17110

RECOMMENDED 12-6-2022

S-39451

6/23/2022
FILENAME: 63016-s-brB1-slb01.dgn

DES: MCA | DES CKD: JMA | DWG: SMZ | DWG CKD: JRM

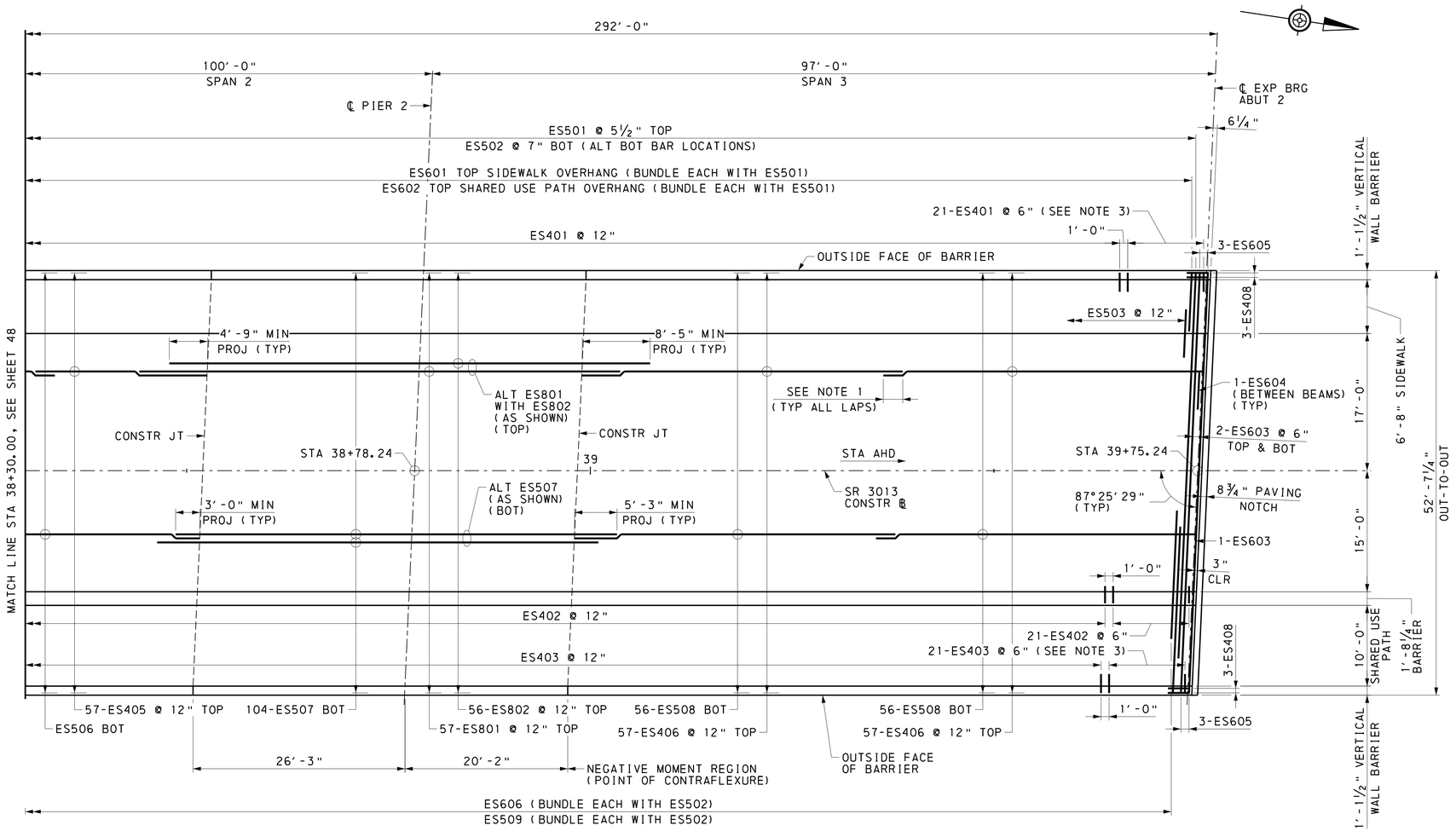

SLAB PLAN

2 0 4 8 FEET

NOTES:

1. DECK SLAB LAP SPLICE LENGTH:
   #4 BARS - 2'-5"
   #5 BARS - 3'-0"
   #6 BARS - 3'-7"
2. THE HAUNCH REINFORCEMENT QUANTITY SHOWN ON THE REINFORCEMENT BAR SCHEDULE PROVIDES THE AMOUNT NECESSARY TO COVER THE LIMITS SHOWN ON THE HAUNCH REINFORCEMENT PLAN. PROVIDE ADDITIONAL HAUNCH REINFORCEMENT IN OTHER REGIONS ALONG THE LENGTH OF THE BEAM WHERE ACTUAL HAUNCHES EXCEED THE THICKNESSES SPECIFIED IN BC-752M.
3. PROVIDE ONE ADDITIONAL ES401 OR ES403 BAR ON EACH SIDE OF BARRIER LIGHTING BLOCKOUT. ADJUST REINFORCEMENT AS REQUIRED TO ACCOMMODATE PLACEMENT OF JUNCTION BOXES AND LIGHTING BLOCKOUTS.

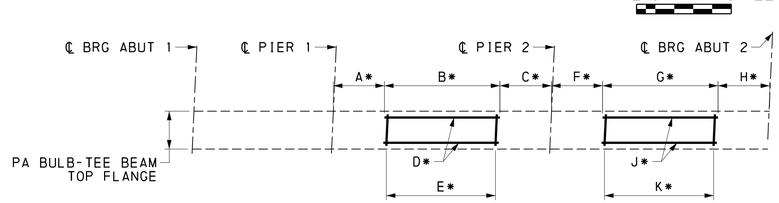

* SEE HAUNCH REINFORCEMENT TABLE

HAUNCH REINFORCEMENT PLAN

NOT TO SCALE

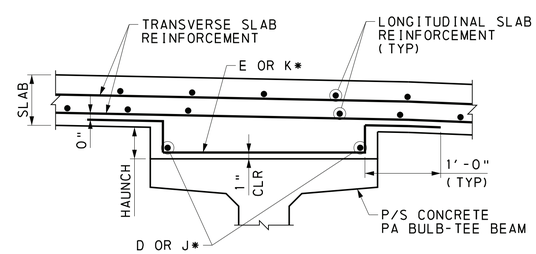

* SEE HAUNCH REINFORCEMENT TABLE

HAUNCH REINFORCEMENT DETAIL

6 0 6 12 INCHES

HAUNCH REINFORCEMENT TABLE

BEAM	A	B*	C	D	E	F	G*	H	J	K
BEAM 1	27'-9"	48'-0"	24'-3"	ES409	43-ES301 @ 14"	23'-9"	50'-0"	23'-3"	ES409	44-ES301 @ 14"
BEAM 2	20'-1"	65'-0"	14'-11"	ES410	57-ES301 @ 14"	15'-2"	67'-0"	14'-10"	ES410	59-ES301 @ 14"
BEAM 3	27'-5"	50'-0"	22'-7"	ES409	44-ES301 @ 14"	22'-6"	53'-0"	21'-6"	ES411	47-ES301 @ 14"
BEAM 4	27'-10"	49'-0"	23'-2"	ES409	43-ES301 @ 14"	21'-10"	54'-0"	21'-2"	ES411	48-ES301 @ 14"
BEAM 5	28'-2"	49'-0"	22'-10"	ES409	43-ES301 @ 14"	22'-2"	53'-0"	21'-10"	ES411	47-ES301 @ 14"
BEAM 6	21'-6"	62'-0"	16'-6"	ES410	55-ES301 @ 14"	16'-6"	65'-0"	15'-6"	ES410	57-ES301 @ 14"
BEAM 7	27'-10"	50'-0"	22'-2"	ES409	44-ES301 @ 14"	21'-10"	54'-0"	21'-2"	ES411	48-ES301 @ 14"

* DOES NOT INCLUDE 1'-11" MINIMUM LAP.

REFERENCES:	SHEETS:
GENERAL PLAN	1
GENERAL NOTES	4 & 5
SLAB PLAN 1	48
SLAB TYPICAL SECTIONS	50 & 51
BARRIER & SIDEWALK DETAILS	52 & 53
DIAPHRAGM DETAILS	54 - 56

Mark	Description	By	Chk'd	Recm'd	Date
REVISIONS					

SR 3013 PREVIOUSLY KNOWN AS LR 22075
BMS STR ID: 22-3013-0020-0291 MPMS/ECMS PROJ: 97828 BRKEY: 67416

HNTB

COMMONWEALTH OF PENNSYLVANIA
REGISTERED PROFESSIONAL
JUSTIN ROBERT MCCARTHY
ENGINEER
PE076998

COMMONWEALTH OF PENNSYLVANIA
DEPARTMENT OF TRANSPORTATION

DAUPHIN COUNTY
SR 0083 SECTION 079
SEG 0020 OFFSET 0291
SR 3013 (29TH STREET) STA 37+78.24 OVER
SR 0083 & NORFOLK SOUTHERN RAILWAY COMPANY
3-SPAN CONTINUOUS COMPOSITE PS CONCRETE
PA BULB-TEE BEAM BRIDGE
SLAB PLAN 2

PREPARED BY:
HNTB CORPORATION
4507 NORTH FRONT STREET
SUITE 300
HARRISBURG, PA 17110

RECOMMENDED 12-6-2022

SHEET 49 OF 93

S-39451

6/23/2022
FILENAME: 63016-s-brB1-s1b02.dgn

DES: MCA | DES CKD: JMA | DWG: SMZ | DWG CKD: JRM

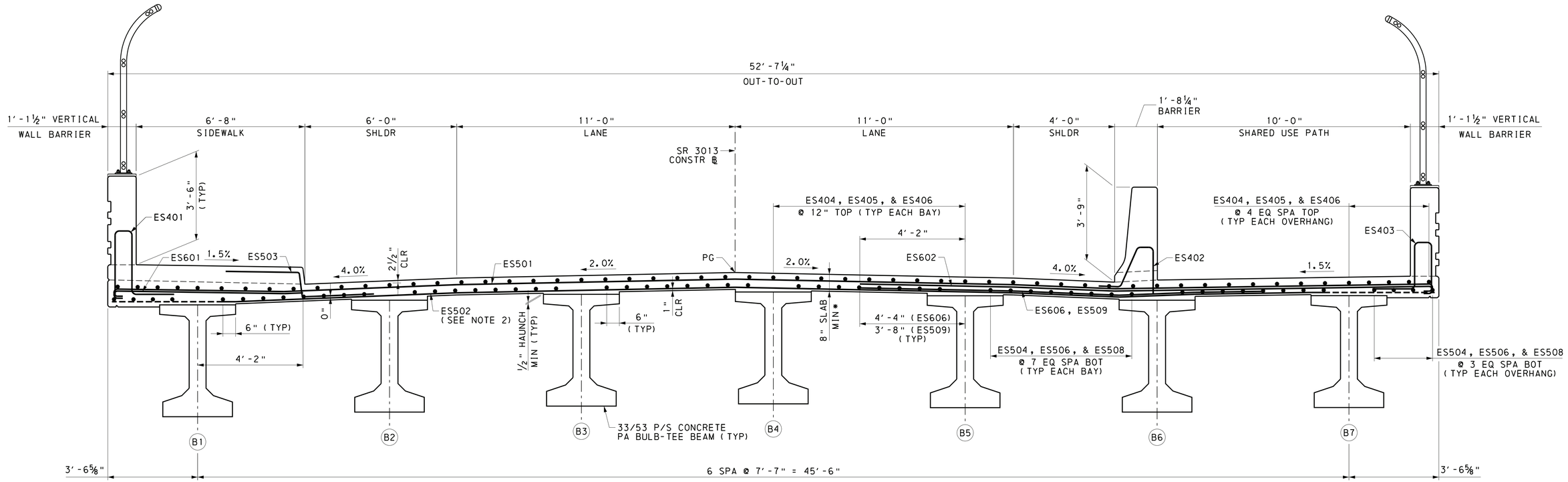

SLAB TYPICAL SECTION - POSITIVE MOMENT

1 0 1 2 FEET

* INCLUDES ½" INTEGRAL WEARING SURFACE

TOTAL DECK SLAB THICKNESS TABLE						
BEAM	℄ BRG ABUT 1	℄ BRG PIER 1, SPAN 1	℄ BRG PIER 1, SPAN 2	℄ BRG PIER 2, SPAN 2	℄ BRG PIER 2, SPAN 3	℄ BRG ABUT 2
BEAM 1	10¼"	10¼"	8½"	8½"	8½"	8½"
BEAM 2	11⅛"	11⅛"	9¼"	9¼"	9¼"	9¼"
BEAM 3	11⅛"	11⅛"	8⅞"	8⅞"	8⅞"	8⅞"
BEAM 4	11⅛"	11⅛"	8⅞"	8⅞"	8⅞"	8⅞"
BEAM 5	11⅛"	11⅛"	8⅞"	8⅞"	8⅞"	8⅞"
BEAM 6	11⅝"	11⅝"	9⅝"	9⅝"	9⅝"	9⅝"
BEAM 7	10¾"	10¾"	8¾"	8¾"	8¾"	8¾"

MEASURED AT ℄ BEAM. VALUES INCLUDE DECK THICKNESS, HAUNCH THICKNESS, AND EFFECT OF DECK CROSS SLOPE.

NOTES:

1. BARRIER AND SIDEWALK REINFORCEMENT NOT SHOWN FOR CLARITY.
2. EXTEND ONE HALF OF ES502 BARS ACROSS THE FULL WIDTH OF THE OVERHANG. THE ALTERNATE BARS WHICH DO NOT EXTEND INTO THE OVERHANG SHALL EXTEND 6" MINIMUM BEYOND THE INTERIOR EDGE OF THE FLANGE OF THE FASCIA BEAM.

Mark	Description	By	Chk'd	Recm'd	Date
REVISIONS					

SR 3013 PREVIOUSLY KNOWN AS LR 22075
BMS STR ID: 22-3013-0020-0291 MPMS/ECMS PROJ: 97828 BRKEY: 67416

REFERENCES:

	SHEETS:
GENERAL PLAN	1
GENERAL NOTES	4 & 5
BEAM DETAILS	44 - 46
SLAB PLANS	48 & 49
SLAB TYPICAL SECTION 2	51
BARRIER & SIDEWALK DETAILS	52 & 53
BARRIER ARCHITECTURAL DETAILS	81 & 82

HNTB

COMMONWEALTH OF PENNSYLVANIA REGISTERED PROFESSIONAL JUSTIN ROBERT MCCARTHY ENGINEER PE076998

PREPARED BY:
HNTB CORPORATION
4507 NORTH FRONT STREET
SUITE 300
HARRISBURG, PA 17110

COMMONWEALTH OF PENNSYLVANIA
DEPARTMENT OF TRANSPORTATION

DAUPHIN COUNTY
SR 0083 SECTION 079
SEG 0020 OFFSET 0291
SR 3013 (29TH STREET) STA 37+78.24 OVER
SR 0083 & NORFOLK SOUTHERN RAILWAY COMPANY
3-SPAN CONTINUOUS COMPOSITE PS CONCRETE
PA BULB-TEE BEAM BRIDGE
SLAB TYPICAL SECTION 1

RECOMMENDED 12-6-2022

S-39451

6/21/2022
FILENAME: 63016-s-brB1-typ02.dgn

DES: MCA	DES CKD: JMA	DWG: SMZ	DWG CKD: JRM

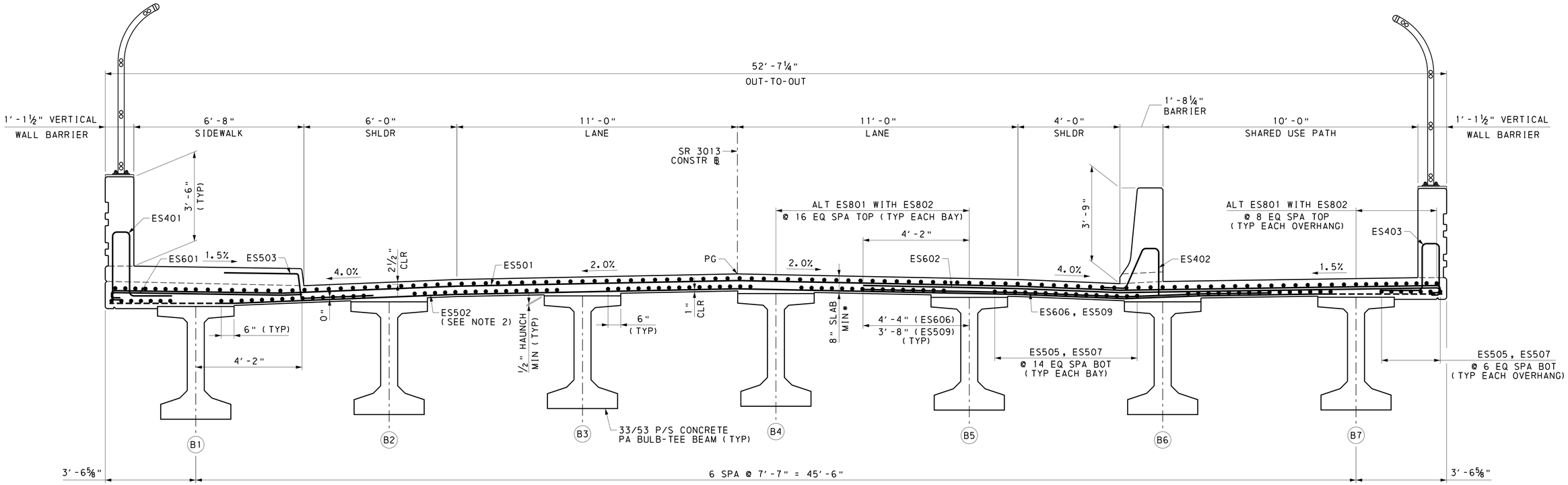

SLAB TYPICAL SECTION - NEGATIVE MOMENT

1 0 1 2 FEET

* INCLUDES ½" INTEGRAL WEARING SURFACE

NOTES:

1. BARRIER AND SIDEWALK REINFORCEMENT NOT SHOWN FOR CLARITY.
2. EXTEND ONE HALF OF ES502 BARS ACROSS THE FULL WIDTH OF THE OVERHANG. THE ALTERNATE BARS WHICH DO NOT EXTEND INTO THE OVERHANG SHALL EXTEND 6" MINIMUM BEYOND THE INTERIOR EDGE OF THE FLANGE OF THE FASCIA BEAM.

Mark	Description	By	Chk'd	Recm'd	Date
REVISIONS					

SR 3013 PREVIOUSLY KNOWN AS LR 22075
BMS STR ID: 22-3013-0020-0291 MPMS/ECMS PROJ: 97828 BRKEY: 67416

REFERENCES:

	SHEETS:
GENERAL PLAN	1
GENERAL NOTES	4 & 5
BEAM DETAILS	44 - 46
SLAB PLANS	48 & 49
SLAB TYPICAL SECTION 1	50
BARRIER & SIDEWALK DETAILS	52 & 53
BARRIER ARCHITECTURAL DETAILS	81 & 82

HNTB

COMMONWEALTH OF PENNSYLVANIA REGISTERED PROFESSIONAL JUSTIN ROBERT MCCARTHY ENGINEER PE076998

PREPARED BY:
HNTB CORPORATION
4507 NORTH FRONT STREET
SUITE 300
HARRISBURG, PA 17110

COMMONWEALTH OF PENNSYLVANIA
DEPARTMENT OF TRANSPORTATION

DAUPHIN COUNTY
SR 0083 SECTION 079
SEG 0020 OFFSET 0291
SR 3013 (29TH STREET) STA 37+78.24 OVER
SR 0083 & NORFOLK SOUTHERN RAILWAY COMPANY
3-SPAN CONTINUOUS COMPOSITE PS CONCRETE
PA BULB-TEE BEAM BRIDGE
SLAB TYPICAL SECTION 2

RECOMMENDED 12-6-2022

SHEET 51 OF 93

S-39451

6/21/2022
FILENAME: 63016-s-brB1-typ03.dgn

DES: MCA	DES CKD: JMA	DWG: SMZ	DWG CKD: JRM

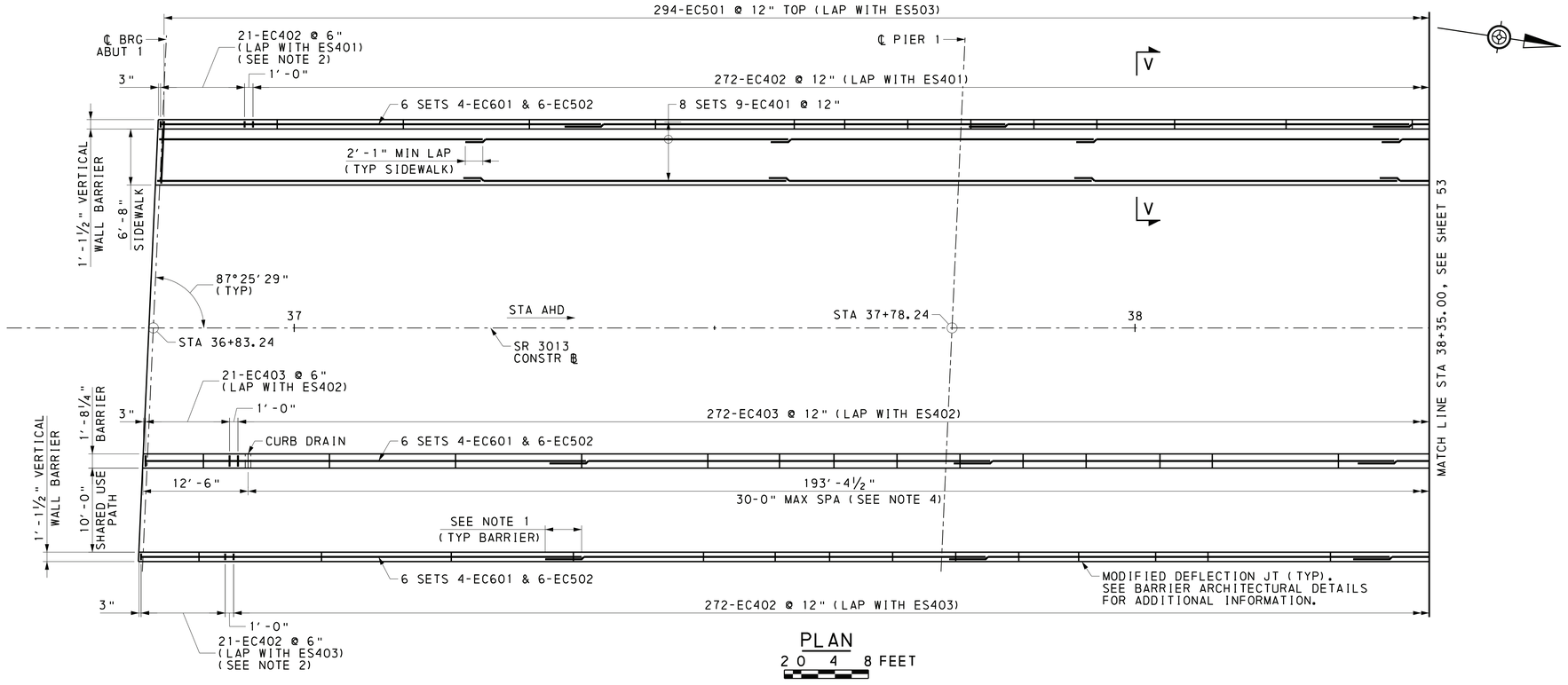

PLAN

2 0 4 8 FEET

NOTES:

1. BARRIER LAP SPLICE LENGTH:
   #5 BARS - 3'-7"
   #6 BARS - 4'-4"
2. PROVIDE ONE ADDITIONAL EC402 BAR ON EACH SIDE OF BARRIER LIGHTING BLOCKOUT (LAP WITH ES401/ES403). ADJUST REINFORCEMENT AS REQUIRED TO ACCOMMODATE PLACEMENT OF JUNCTION BOXES AND LIGHTING BLOCKOUTS. SEE HIGHWAY LIGHTING ALSO PLAN FOR PLACEMENT OF JUNCTION BOXES AND LUMINAIRES.
3. REFER TO HIGHWAY LIGHTING ALSO PLAN FOR UNDERPASS LIGHTING DETAILS ON EACH SIDE OF PIER 1.
4. PROVIDE 6" MIN SPACING FROM ℄ OF CURB DRAIN TO MODIFIED DEFLECTION JOINT. REFER TO BC-752M FOR ADDITIONAL INFORMATION.

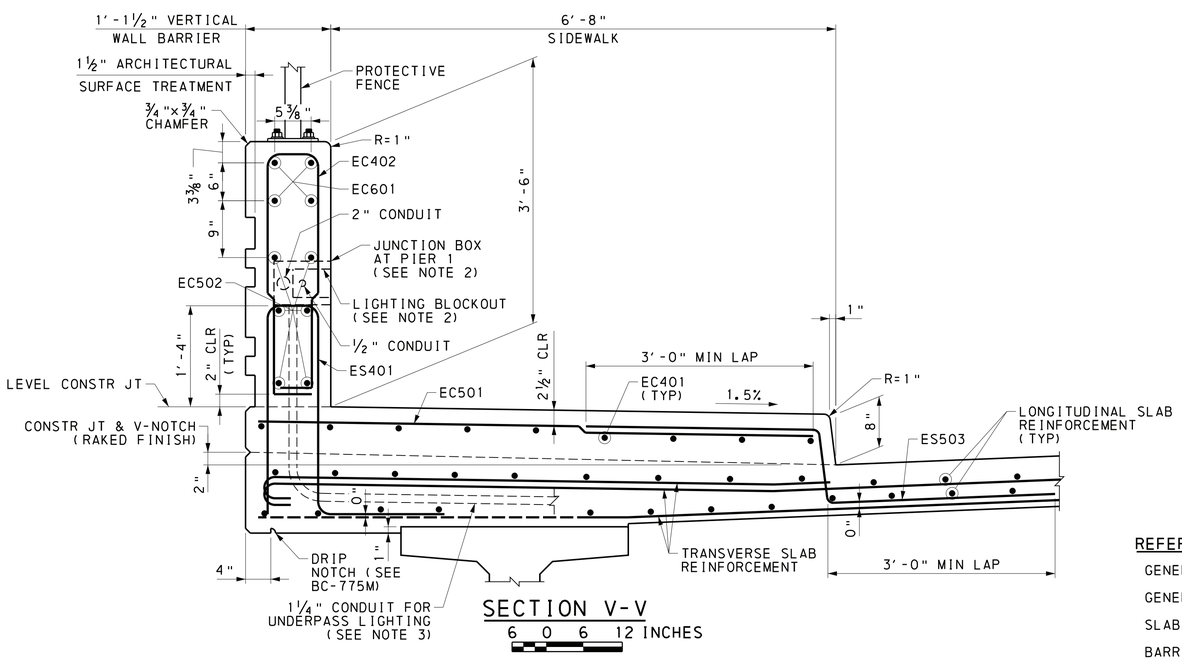

SECTION V-V

6 0 6 12 INCHES

REFERENCES:	SHEETS:
GENERAL PLAN	1
GENERAL NOTES	4 & 5
SLAB PLANS	44 - 46
BARRIER & SIDEWALK DETAILS 2	53
BARRIER ARCHITECTURAL DETAILS	81 & 82
PROTECTIVE FENCE DETAILS	83

Mark	Description	By	Chk'd	Recm'd	Date
REVISIONS					

SR 3013 PREVIOUSLY KNOWN AS LR 22075
BMS STR ID: 22-3013-0020-0291 MPMS/ECMS PROJ: 97828 BRKEY: 67416

HNTB

COMMONWEALTH OF PENNSYLVANIA REGISTERED PROFESSIONAL JUSTIN ROBERT MCCARTHY ENGINEER PE076998

COMMONWEALTH OF PENNSYLVANIA
DEPARTMENT OF TRANSPORTATION

DAUPHIN COUNTY
SR 0083 SECTION 079
SEG 0020 OFFSET 0291
SR 3013 (29TH STREET) STA 37+78.24 OVER
SR 0083 & NORFOLK SOUTHERN RAILWAY COMPANY
3-SPAN CONTINUOUS COMPOSITE PS CONCRETE
PA BULB-TEE BEAM BRIDGE
BARRIER & SIDEWALK DETAILS 1

PREPARED BY:
HNTB CORPORATION
4507 NORTH FRONT STREET
SUITE 300
HARRISBURG, PA 17110

RECOMMENDED 12-6-2022

S-39451

6/23/2022
FILENAME: 63016-s-brB1-slb03.dgn

DES: MCA	DES CKD: JMA	DWG: SMZ	DWG CKD: JRM

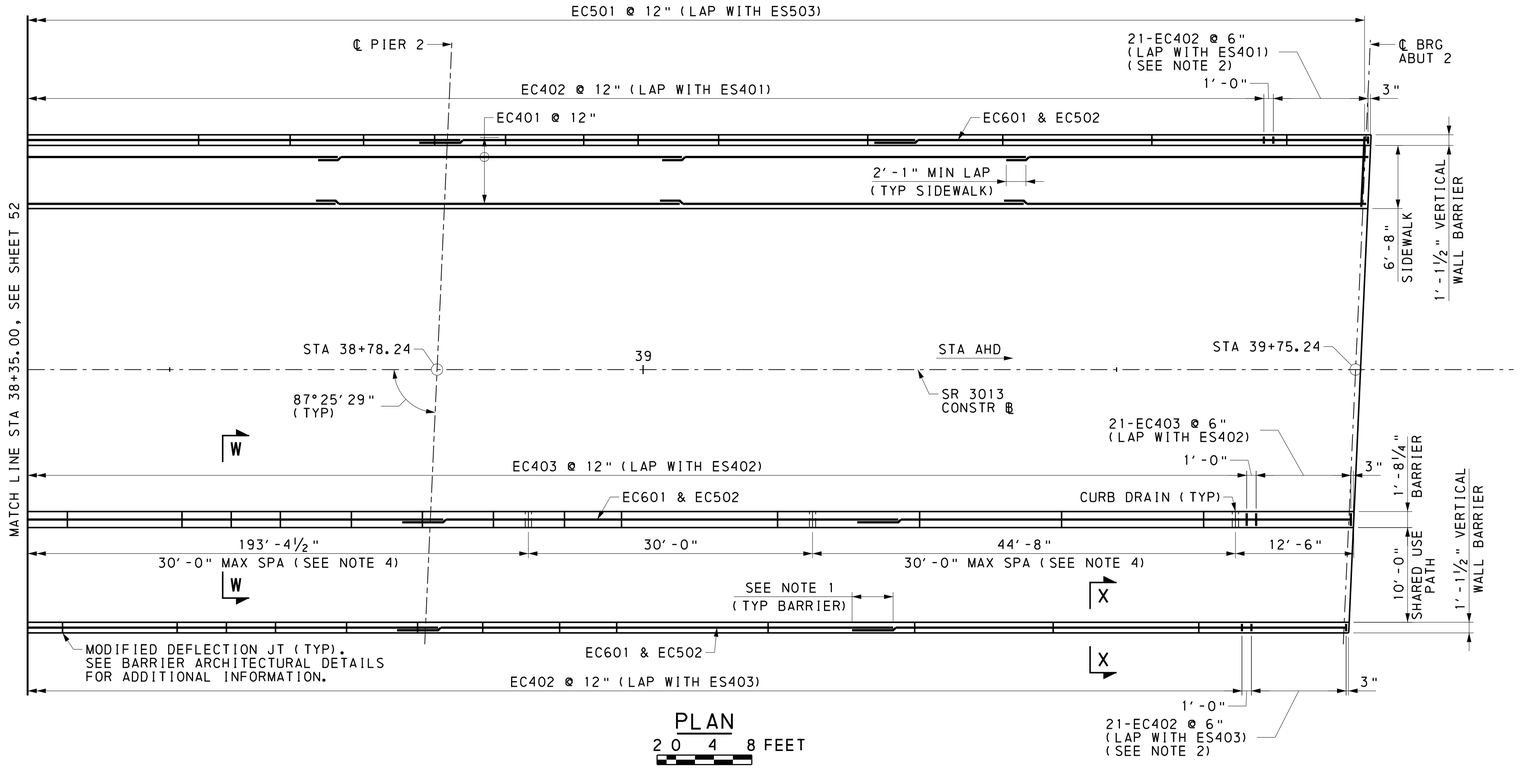

PLAN

2 0 4 8 FEET

NOTES:

1. BARRIER LAP SPLICE LENGTH:
   #5 BARS - 3'-7"
   #6 BARS - 4'-4"
2. PROVIDE ONE ADDITIONAL EC402 BAR ON EACH SIDE OF BARRIER LIGHTING BLOCKOUT (LAP WITH ES401/ES403). ADJUST REINFORCEMENT AS REQUIRED TO ACCOMMODATE PLACEMENT OF JUNCTION BOXES AND LIGHTING BLOCKOUTS. SEE HIGHWAY LIGHTING ALSO PLAN FOR PLACEMENT OF JUNCTION BOXES AND LUMINAIRES.
3. FIELD ADJUST EC502 BARS IN BARRIER AT CURB DRAIN LOCATIONS AS REQUIRED.
4. PROVIDE 6" MIN SPACING FROM ℄ OF CURB DRAIN TO MODIFIED DEFLECTION JOINT. REFER TO BC-752M FOR ADDITIONAL INFORMATION.

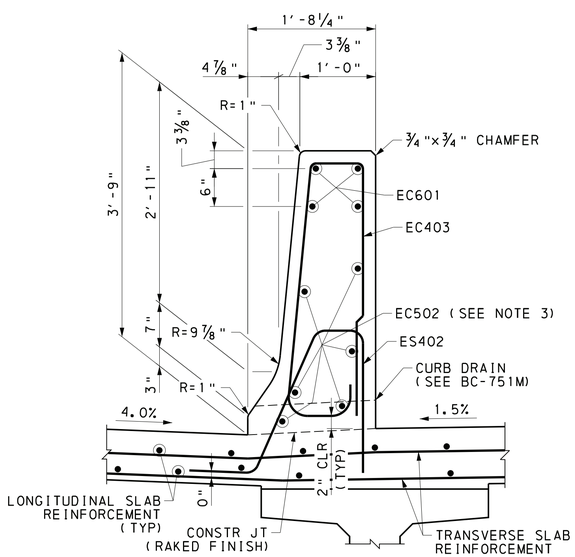

SECTION W-W

6 0 6 12 INCHES

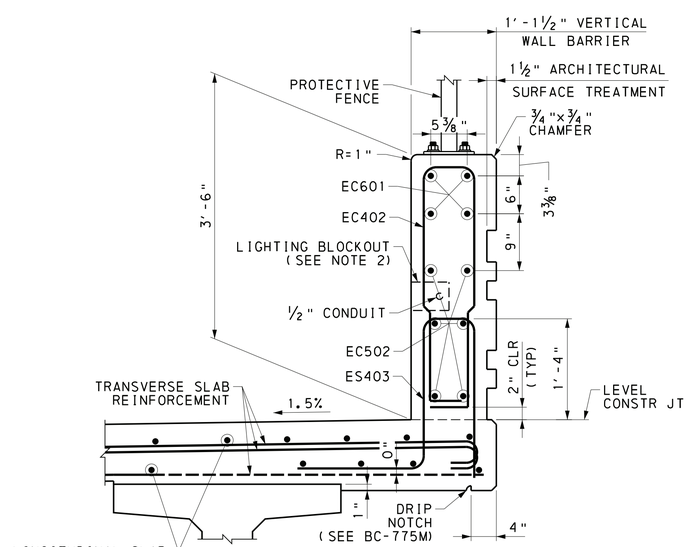

SECTION X-X

6 0 6 12 INCHES

REFERENCES:	SHEETS:
GENERAL PLAN	1
GENERAL NOTES	4 & 5
SLAB PLANS	44 - 46
BARRIER & SIDEWALK DETAILS 1	52
BARRIER ARCHITECTURAL DETAILS	81 & 82
PROTECTIVE FENCE DETAILS	83

Mark	Description	By	Chk'd	Recm'd	Date

REVISIONS

SR 3013 PREVIOUSLY KNOWN AS LR 22075
BMS STR ID: 22-3013-0020-0291 MPMS/ECMS PROJ: 97828 BRKEY: 67416

HNTB

COMMONWEALTH OF PENNSYLVANIA REGISTERED PROFESSIONAL JUSTIN ROBERT MCCARTHY ENGINEER PE076998

COMMONWEALTH OF PENNSYLVANIA
DEPARTMENT OF TRANSPORTATION

DAUPHIN COUNTY
SR 0083 SECTION 079
SEG 0020 OFFSET 0291
SR 3013 (29TH STREET) STA 37+78.24 OVER
SR 0083 & NORFOLK SOUTHERN RAILWAY COMPANY
3-SPAN CONTINUOUS COMPOSITE PS CONCRETE
PA BULB-TEE BEAM BRIDGE
BARRIER & SIDEWALK DETAILS 2

PREPARED BY:
HNTB CORPORATION
4507 NORTH FRONT STREET
SUITE 300
HARRISBURG, PA 17110

RECOMMENDED 12-6-2022

SHEET 53 OF 93

S-39451

6/23/2022
FILENAME: 63016-s-brB1-slb04.dgn

DES: MCA	DES CKD: JMA	DWG: SMZ	DWG CKD: JRM

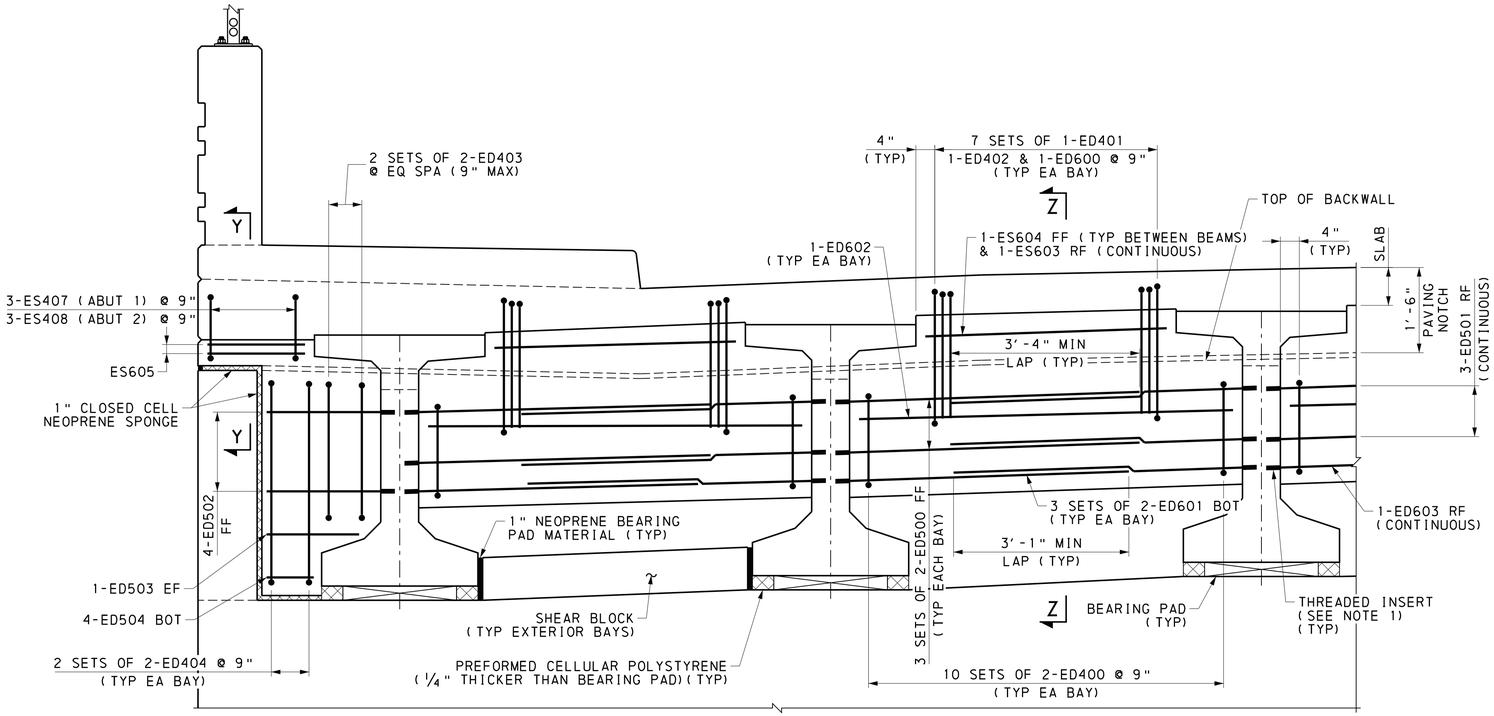

DIAPHRAGM @ ABUTMENTS

12 0 12 INCHES

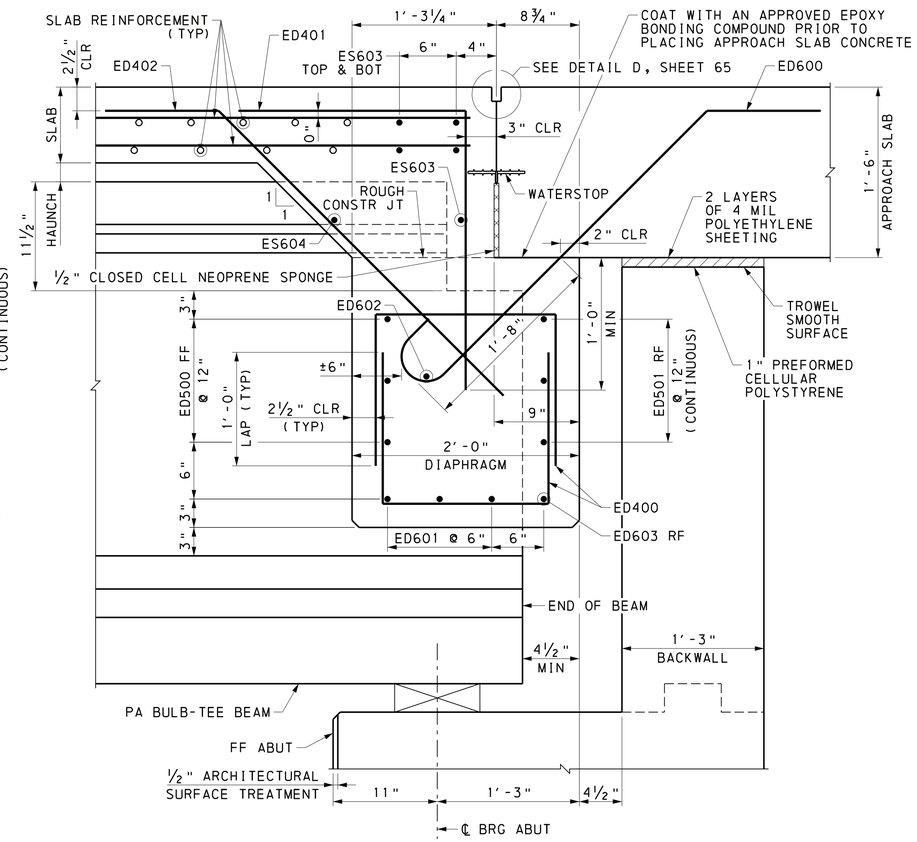

(FOR WATERPROOFING DETAILS, SEE ATTACHMENT BC-788 MODIFIED "SPRAY-ON WATERPROOFING DETAILS")

SECTION Z-Z

6 0 6 INCHES

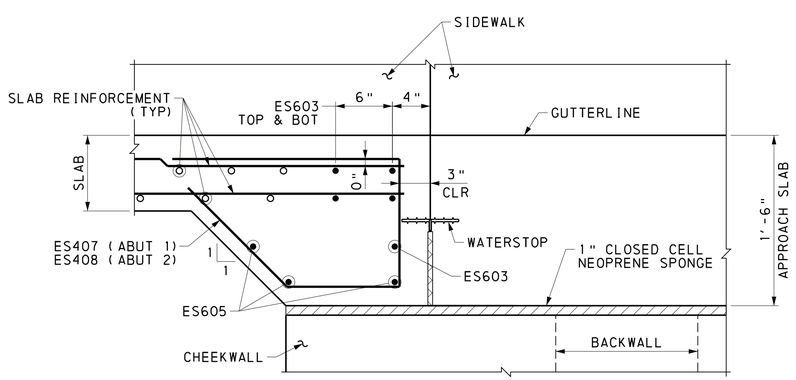

SECTION Y-Y

6 0 6 INCHES

(LEFT OVERHANG SHOWN, RIGHT OVERHANG SIMILAR WITHOUT SIDEWALK)

NOTES:

1. USE ONE SIZE SMALLER INSERT FOR DEFORMED BARS. THE MINIMUM LENGTH OF THE INSERT IS 3". INSERTS TO BE GALVANIZED OR COMPLETELY ZINC-ELECTROPLATED.

REFERENCES:	SHEETS:
GENERAL PLAN	1
GENERAL NOTES	4 & 5
FRAMING PLAN	43
BEAM DETAILS	44 - 46
SLAB PLANS	48 & 49
DIAPHRAGM DETAILS	54 - 56

Mark	Description	By	Chk'd	Recm'd	Date
REVISIONS					

SR 3013 PREVIOUSLY KNOWN AS LR 22075
BMS STR ID: 22-3013-0020-0291 MPMS/ECMS PROJ: 97828 BRKEY: 67416

HNTB

COMMONWEALTH OF PENNSYLVANIA
REGISTERED PROFESSIONAL
JUSTIN ROBERT MCCARTHY
ENGINEER
PE076998

COMMONWEALTH OF PENNSYLVANIA
DEPARTMENT OF TRANSPORTATION

DAUPHIN COUNTY
SR 0083 SECTION 079
SEG 0020 OFFSET 0291
SR 3013 (29TH STREET) STA 37+78.24 OVER
SR 0083 & NORFOLK SOUTHERN RAILWAY COMPANY
3-SPAN CONTINUOUS COMPOSITE PS CONCRETE
PA BULB-TEE BEAM BRIDGE
DIAPHRAGM DETAILS 1

PREPARED BY:
HNTB CORPORATION
4507 NORTH FRONT STREET
SUITE 300
HARRISBURG, PA 17110

RECOMMENDED 12-6-2022

SHEET 54 OF 93

S-39451

12/2/2022
FILENAME: 63016-s-brB1-dia01.dgn

DES: MCA | DES CKD: JMA | DWG: SMZ | DWG CKD: JRM

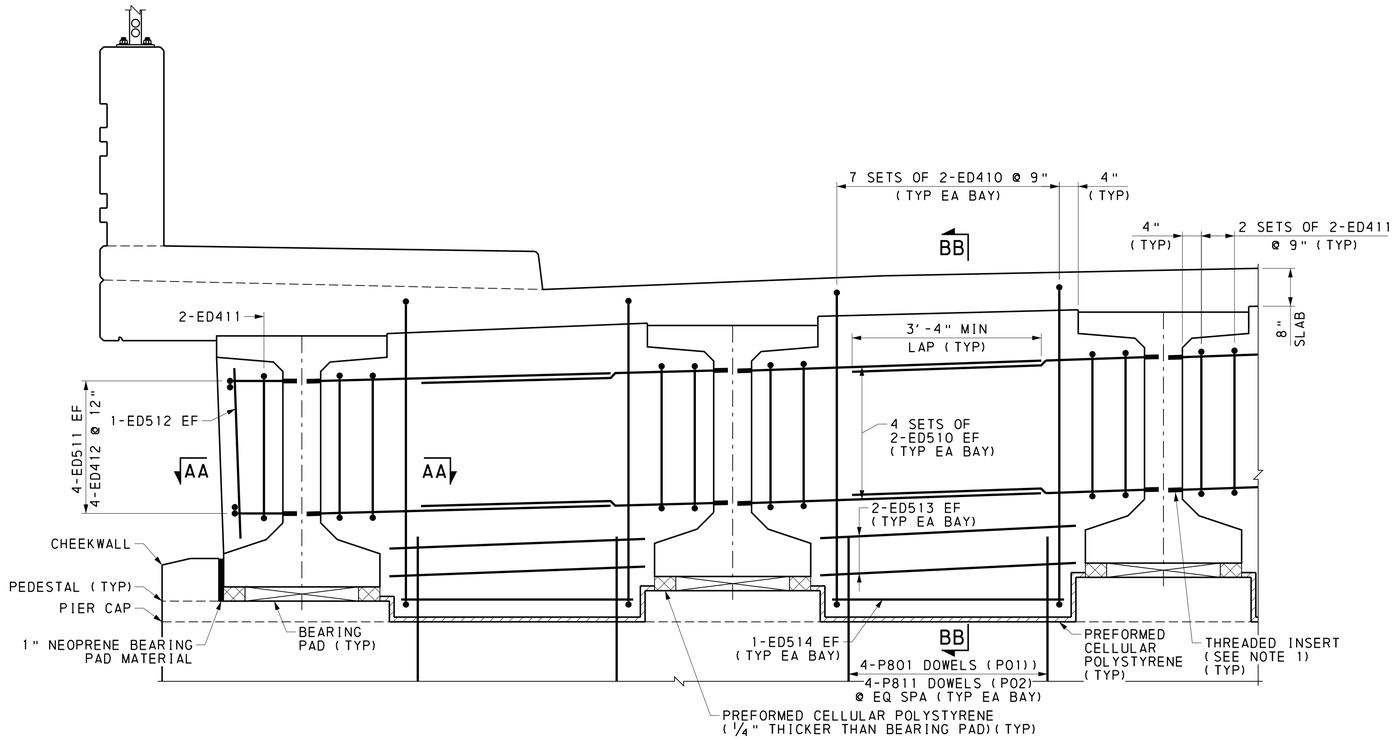

CONTINUITY DIAPHRAGM @ PIERS

12 0 12 INCHES

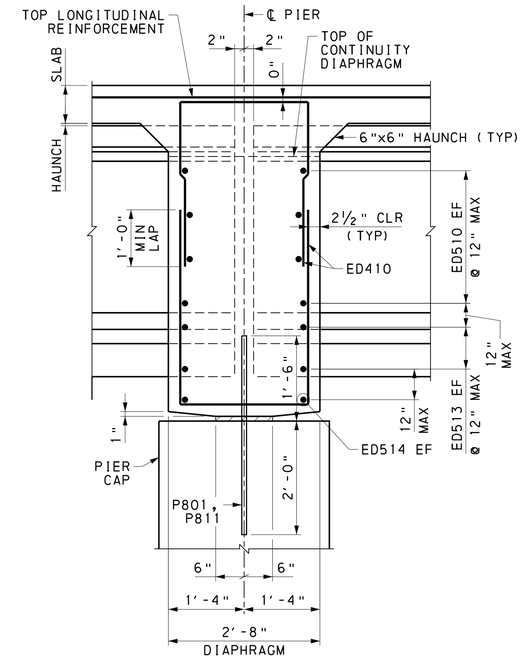

SECTION BB-BB

12 0 12 INCHES

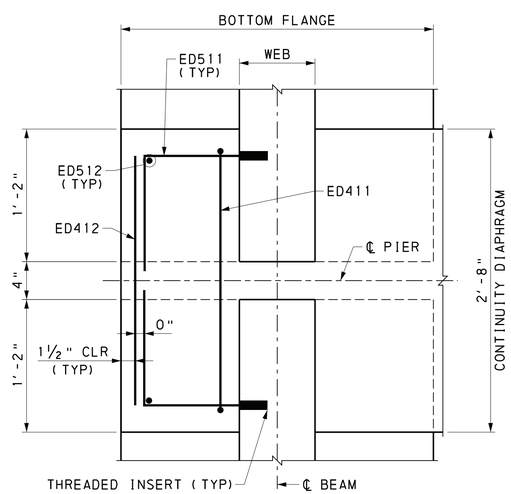

SECTION AA-AA

6 0 6 INCHES

(INTERIOR DIAPHRAGM REINFORCEMENT NOT SHOWN FOR CLARITY)

NOTES:

1. USE ONE SIZE SMALLER INSERT FOR DEFORMED BARS. THE MINIMUM LENGTH OF THE INSERT IS 3". INSERTS TO BE GALVANIZED OR COMPLETELY ZINC-ELECTROPLATED.

REFERENCES:	SHEETS:
GENERAL PLAN	1
GENERAL NOTES	4 & 5
FRAMING PLAN	43
BEAM DETAILS	44 - 46
SLAB PLANS	48 & 49
DIAPHRAGM DETAILS	54 - 56

Mark	Description	By	Chk'd	Recm'd	Date
REVISIONS					

SR 3013 PREVIOUSLY KNOWN AS LR 22075
BMS STR ID: 22-3013-0020-0291 MPMS/ECMS PROJ: 97828 BRKEY: 67416

HNTB

COMMONWEALTH OF PENNSYLVANIA
REGISTERED PROFESSIONAL
JUSTIN ROBERT MCCARTHY
ENGINEER
PE076998

PREPARED BY:
HNTB CORPORATION
4507 NORTH FRONT STREET
SUITE 300
HARRISBURG, PA 17110

COMMONWEALTH OF PENNSYLVANIA
DEPARTMENT OF TRANSPORTATION

DAUPHIN COUNTY
SR 0083 SECTION 079
SEG 0020 OFFSET 0291
SR 3013 (29TH STREET) STA 37+78.24 OVER
SR 0083 & NORFOLK SOUTHERN RAILWAY COMPANY
3-SPAN CONTINUOUS COMPOSITE PS CONCRETE
PA BULB-TEE BEAM BRIDGE
DIAPHRAGM DETAILS 2

RECOMMENDED 12-6-2022

SHEET 55 OF 93

S-39451

6/21/2022
FILENAME: 63016-s-brB1-di002.dgn

DES: MCA | DES CKD: JMA | DWG: SMZ | DWG CKD: JRM

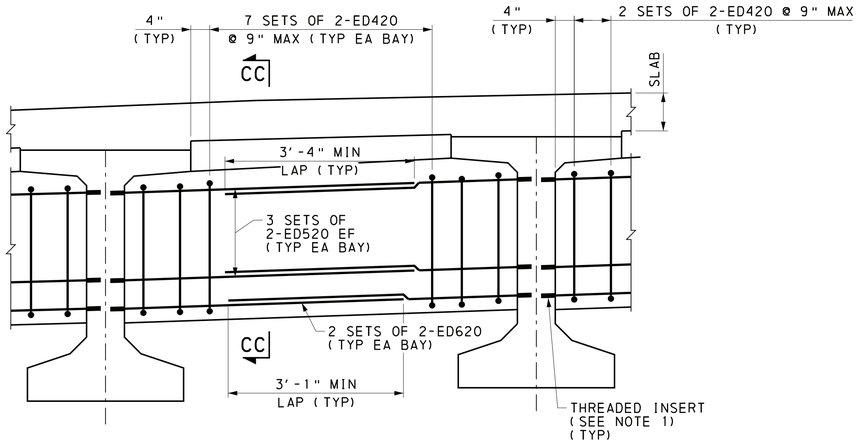

INTERMEDIATE DIAPHRAGM

12 0 12 INCHES

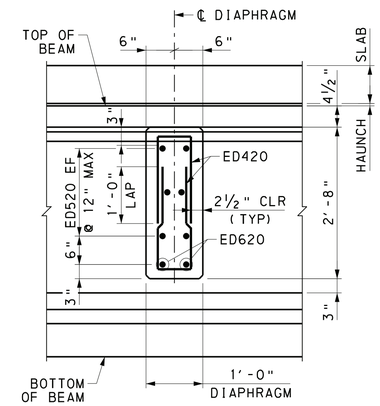

SECTION CC-CC

12 0 12 INCHES

NOTES:

1. USE ONE SIZE SMALLER INSERT FOR DEFORMED BARS. THE MINIMUM LENGTH OF THE INSERT IS 3". INSERTS TO BE GALVANIZED OR COMPLETELY ZINC-ELECTROPLATED.

REFERENCES:	SHEETS:
GENERAL PLAN	1
GENERAL NOTES	4 & 5
FRAMING PLAN	43
BEAM DETAILS	44 - 46
SLAB PLANS	48 & 49
DIAPHRAGM DETAILS	54 - 56

Mark	Description	By	Chk'd	Recm'd	Date

REVISIONS

SR 3013 PREVIOUSLY KNOWN AS LR 22075
BMS STR ID: 22-3013-0020-0291 MPMS/ECMS PROJ: 97828 BRKEY: 67416

HNTB

COMMONWEALTH OF PENNSYLVANIA
DEPARTMENT OF TRANSPORTATION

COMMONWEALTH OF PENNSYLVANIA
REGISTERED PROFESSIONAL
JUSTIN ROBERT MCCARTHY
ENGINEER
PE076998

DAUPHIN COUNTY
SR 0083 SECTION 079
SEG 0020 OFFSET 0291
SR 3013 (29TH STREET) STA 37+78.24 OVER
SR 0083 & NORFOLK SOUTHERN RAILWAY COMPANY
3-SPAN CONTINUOUS COMPOSITE PS CONCRETE
PA BULB-TEE BEAM BRIDGE
DIAPHRAGM DETAILS 3

PREPARED BY:
HNTB CORPORATION
4507 NORTH FRONT STREET
SUITE 300
HARRISBURG, PA 17110

RECOMMENDED 12-6-2022

SHEET 56 OF 93

S-39451

6/23/2022
FILENAME: 63016-s-brB1-dia03.dgn

DES: MCA	DES CKD: JMA	DWG: SMZ	DWG CKD: JRM

MARK	SIZE	NO REQ'D	LENGTH	TYPE	A	B	C	D	E	REMARKS
						ABUTMENT DIAPHRAGMS				
ED400	4	240	4'-5"	31	1'-5"	1'-7"	1'-5"			
ED401	4	84	4'-4"	77	2'-4"	2'-0"				
ED402	4	84	4'-3"	78	3'-3"	1'-0"	8 1/2"			
ED403	4	16	5'-9"	31	2'-1"	1'-7"	2'-1"			
ED404	4	16	6'-7"	31	2'-6"	1'-7"	2'-6"			
ED500	5	72	5'-5"	STR						THREAD ONE END 3"
ED501	5	6	50'-0"	STR						
ED502	5	16	2'-2"	STR						THREAD ONE END 3"
ED503	5	8	1'-5"	STR						
ED504	5	16	8"	STR						
ED600	6	84	5'-2"	73	8"	3'-6"	1'-0"			
ED601	6	72	5'-3"	STR						THREAD ONE END 3"
ED602	6	12	6'-7"	STR						
ED603	6	2	50'-0"	STR						
						CONTINUITY DIAPHRAGMS				
ED410	4	168	9'-5"	31	3'-7"	2'-3"	3'-7"			
ED411	4	104	5'-9"	31	1'-9"	2'-3"	1'-9"			
ED412	4	16	2'-3"	STR						
ED510	5	192	5'-5"	STR						THREAD ONE END 3"
ED511	5	32	2'-2"	77	1'-2"	1'-0"				THREAD "A" 3"
ED512	5	8	3'-0"	STR						
ED513	5	48	4'-6"	STR						
ED514	5	24	3'-11"	STR						
						INTERMEDIATE DIAPHRAGMS				
ED420	4	396	3'-11"	31	1'-8"	7"	1'-8"			
ED520	5	216	5'-5"	STR						THREAD ONE END 3"
ED620	6	72	5'-3"	STR						THREAD ONE END 3"
						DECK				
ES301	3	679	6'-1"	STR						BEND IN FIELD
ES401	4	317	7'-8"	27	2'-6 1/2"	4"	3"	2'-4"	1'-6"	R = 2"
ES402	4	314	6'-3 1/2"	22A	1'-9"	1'-11"	1'-6"	3/4"		H = 10 1/8", R = 2"
ES403	4	316	6'-4"	27A	1'-10 1/2"	4"	3"	1'-8"	1'-6"	F = 1/4", R = 2"
ES404	4	114	39'-0"	STR						
ES405	4	114	25'-5"	STR						
ES406	4	114	39'-10"	STR						
ES407	4	6	6'-0"	49	1'-3"	1'-0"	1'-3"	2'-6"	10 5/8"	
ES408	4	6	5'-8"	49	1'-1"	1'-0"	1'-1"	2'-6"	9 1/4"	
ES409	4	24	26'-3"	STR						
ES410	4	16	34'-9"	STR						
ES411	4	16	28'-3"	STR						
ES501	5	635	53'-5"	68	7"	52'-3"	7"			J = 5"
ES502	5	499	47'-11"	STR						
ES503	5	294	7'-1"	113	3'-0"	1'-0 3/4"	3'-0"	1/2"	1 5/8"	F = 1 1/2"
ES504	5	112	39'-3"	STR						
ES505	5	104	53'-6"	STR						
ES506	5	56	48'-4"	STR						
ES507	5	104	54'-8"	STR						
ES508	5	112	40'-1"	STR						
ES509	5	499	15'-0"	STR						
										J = 6"
ES601	6	635	8'-2"	65	8"	7'-6"				J = 6"
ES602	6	635	23'-4"	65	8"	22-8"				
ES603	6	10	52'-3"	STR						
ES604	6	12	4'-3"	STR						
ES605	6	12	1'-8"	STR						
ES606	6	499	16'-4"	STR						
ES801	8	114	59'-7"	STR						
ES802	8	112	59'-7"	STR						
EC401	4	72	38'-5"	STR						
EC402	4	633	7'-10"	10	2'-9"	4"	3"	2'-9"	5 1/2"	H = 3", R = 2"
EC403	4	314	8'-7"	17	3'-0 1/2"	3 3/8"	2'-10 3/4"	6 3/4"	5"	H = 3 3/8", R = 2"
EC501	5	294	7'-4"	STR						
EC502	5	108	51'-9"	STR						
EC601	6	72	52'-5"	STR						

BRIDGE 1

NOTES:

1. "E" PREFIX IN BAR MARK DENOTES EPOXY COATED BARS.
2. ALL DIMENSIONS ARE OUT TO OUT OF BAR EXCEPT "A" & "C" ON STANDARD 135° AND 180° HOOKS, UNLESS NOTED.
3. FOR REINFORCEMENT BAR FABRICATION DETAILS, REFER TO STANDARD DRAWING BC-736M.
4. FIGURES IN CIRCLE REPRESENT BAR TYPES.
5. "J" DIMENSIONS ON 180° HOOKS ARE SHOWN ONLY WHERE NECESSARY TO RESTRICT HOOK SIZE, OTHERWISE STANDARD HOOKS ARE TO BE USED.
6. RADIUS, "R" IS TO THE INSIDE OF THE BAR.
7. REINFORCEMENT BAR SCHEDULE IS FOR INFORMATION ONLY. VERIFY INFORMATION BEFORE FABRICATION.

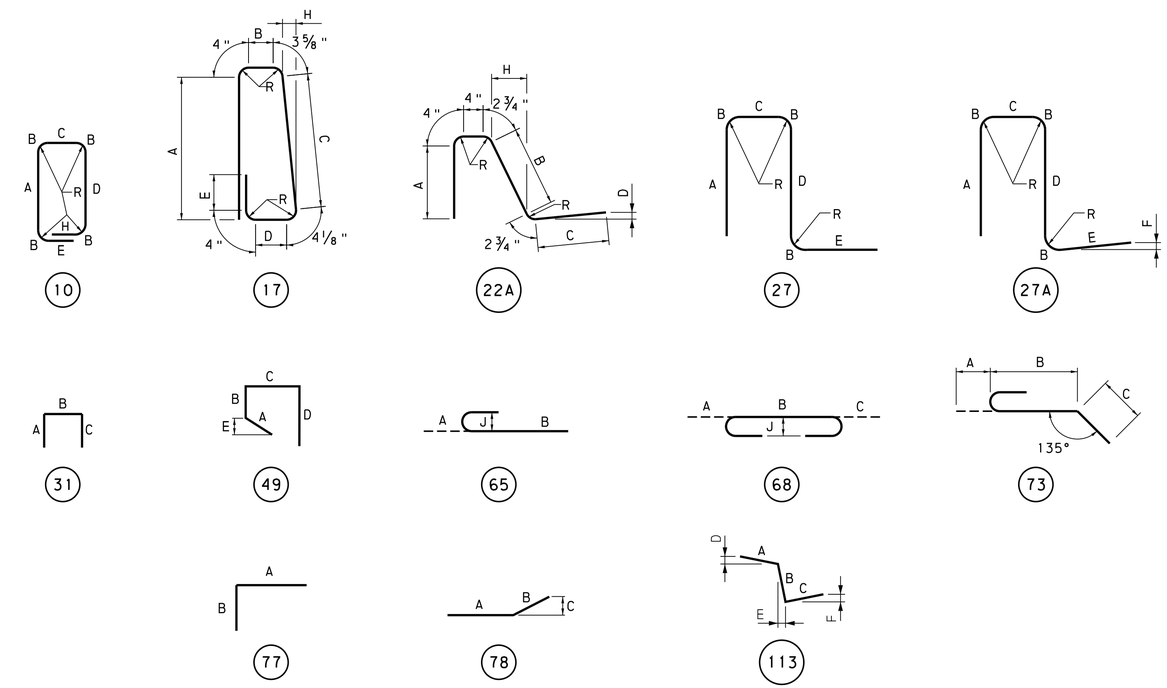

Mark	Description	By	Chk'd	Recm'd	Date
REVISIONS					

SR 3013 PREVIOUSLY KNOWN AS LR 22075
BMS STR ID: 22-3013-0020-0291 MPMS/ECMS PROJ: 97828 BRKEY: 67416

REFERENCES: SHEETS:

GENERAL NOTES	4 & 5
SLAB DRAWINGS	48 - 53
DIAPHRAGM DRAWINGS	54 - 56

HNTB

COMMONWEALTH OF PENNSYLVANIA REGISTERED PROFESSIONAL JUSTIN ROBERT MCCARTHY ENGINEER PE076998

PREPARED BY:
HNTB CORPORATION
4507 NORTH FRONT STREET
SUITE 300
HARRISBURG, PA 17110

COMMONWEALTH OF PENNSYLVANIA
DEPARTMENT OF TRANSPORTATION

DAUPHIN COUNTY
SR 0083 SECTION 079
SEG 0020 OFFSET 0291
SR 3013 (29TH STREET) STA 37+78.24 OVER
SR 0083 & NORFOLK SOUTHERN RAILWAY COMPANY
3-SPAN CONTINUOUS COMPOSITE PS CONCRETE
PA BULB-TEE BEAM BRIDGE
SUPERSTRUCTURE REBAR SCHEDULE

RECOMMENDED 12-6-2022

SHEET 57 OF 93

S-39451

DES: MCA | DES CKD: JRM | DWG: SMZ | DWG CKD: JRM

6/23/2022
FILENAME: 63016-s-brB1-bar04.dgn

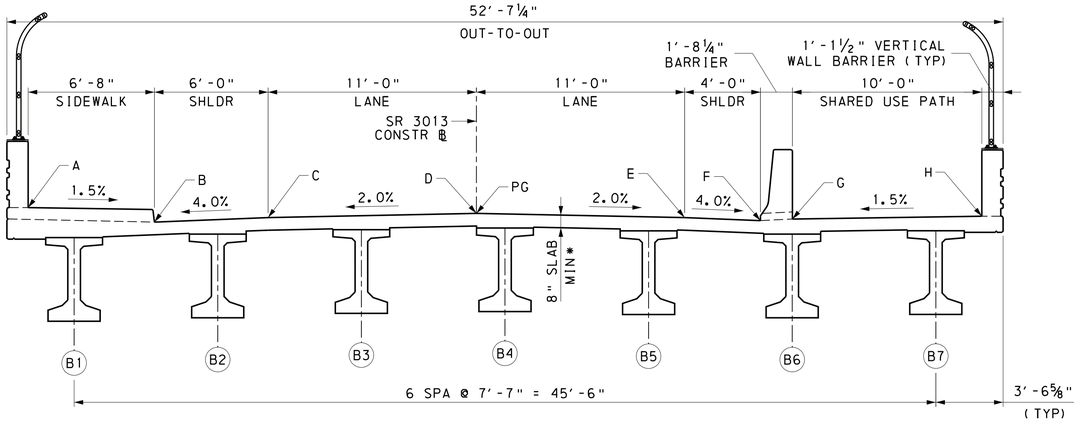

DECK ELEVATIONS DIAGRAM

2 0 2 4 FEET

* INCLUDES ½" INTEGRAL WEARING SURFACE

FINISHED DECK ELEVATIONS AT TENTH POINTS ON ℄ BEAM

	LOCATION	BEAM B1		BEAM B2		BEAM B3		BEAM B4		BEAM B5		BEAM B6		BEAM B7	
		STATION	ELEV	STATION	ELEV	STATION	ELEV	STATION	ELEV	STATION	ELEV	STATION	ELEV	STATION	ELEV
SPAN 1	℄ BRG ABUT 1	36+84.20	395.56	36+83.85	394.95	36+83.51	395.13	36+83.17	395.21	36+82.83	395.03	36+82.49	394.90	36+82.15	394.99
	0.1L	36+93.62	396.10	36+93.28	395.49	36+92.94	395.67	36+92.60	395.74	36+92.26	395.57	36+91.91	395.44	36+91.57	395.53
	0.2L	37+03.05	396.64	37+02.70	396.02	37+02.36	396.21	37+02.02	396.28	37+01.68	396.11	37+01.34	395.97	37+01.00	396.07
	0.3L	37+12.47	397.17	37+12.13	396.56	37+11.79	396.74	37+11.45	396.82	37+11.11	396.65	37+10.76	396.51	37+10.42	396.61
	0.4L	37+21.90	397.71	37+21.55	397.10	37+21.21	397.28	37+20.87	397.35	37+20.53	397.18	37+20.19	397.05	37+19.85	397.14
	0.5L	37+31.32	398.25	37+30.98	397.63	37+30.64	397.82	37+30.30	397.89	37+29.96	397.72	37+29.61	397.58	37+29.27	397.68
	0.6L	37+40.75	398.79	37+40.40	398.17	37+40.06	398.36	37+39.72	398.43	37+39.38	398.26	37+39.04	398.12	37+38.70	398.22
	0.7L	37+50.17	399.32	37+49.83	398.71	37+49.49	398.89	37+49.15	398.96	37+48.81	398.79	37+48.46	398.66	37+48.12	398.75
	0.8L	37+59.60	399.86	37+59.25	399.24	37+58.91	399.43	37+58.57	399.50	37+58.23	399.33	37+57.89	399.20	37+57.55	399.29
	0.9L	37+69.02	400.40	37+68.68	399.78	37+68.34	399.97	37+68.00	400.04	37+67.66	399.87	37+67.31	399.73	37+66.97	399.83
	℄ BRG PIER 1	37+78.45	400.93	37+78.10	400.32	37+77.76	400.50	37+77.42	400.58	37+77.08	400.40	37+76.74	400.27	37+76.40	400.36
SPAN 2	℄ BRG PIER 1	37+79.95	401.02	37+79.60	400.40	37+79.26	400.59	37+78.92	400.66	37+78.58	400.49	37+78.24	400.36	37+77.90	400.45
	0.1L	37+89.80	401.58	37+89.45	400.97	37+89.11	401.15	37+88.77	401.22	37+88.43	401.05	37+88.09	400.92	37+87.75	401.01
	0.2L	37+99.65	402.14	37+99.30	401.53	37+98.96	401.71	37+98.62	401.78	37+98.28	401.61	37+97.94	401.48	37+97.60	401.57
	0.3L	38+09.50	402.67	38+09.15	402.06	38+08.81	402.24	38+08.47	402.32	38+08.13	402.15	38+07.79	402.02	38+07.45	402.11
	0.4L	38+19.35	403.14	38+19.00	402.53	38+18.66	402.72	38+18.32	402.80	38+17.98	402.63	38+17.64	402.50	38+17.30	402.60
	0.5L	38+29.20	403.57	38+28.85	402.96	38+28.51	403.15	38+28.17	403.23	38+27.83	403.06	38+27.49	402.93	38+27.15	403.03
	0.6L	38+39.05	403.94	38+38.70	403.33	38+38.36	403.52	38+38.02	403.60	38+37.68	403.44	38+37.34	403.31	38+37.00	403.41
	0.7L	38+48.90	404.25	38+48.55	403.65	38+48.21	403.84	38+47.87	403.92	38+47.53	403.76	38+47.19	403.64	38+46.85	403.74
	0.8L	38+58.75	404.52	38+58.40	403.91	38+58.06	404.11	38+57.72	404.19	38+57.38	404.03	38+57.04	403.91	38+56.70	404.01
	0.9L	38+68.60	404.73	38+68.25	404.13	38+67.91	404.32	38+67.57	404.41	38+67.23	404.25	38+66.89	404.13	38+66.55	404.24
	℄ BRG PIER 2	38+78.45	404.88	38+78.10	404.29	38+77.76	404.49	38+77.42	404.57	38+77.08	404.42	38+76.74	404.30	38+76.40	404.40
SPAN 3	℄ BRG PIER 2	38+79.95	404.90	38+79.60	404.30	38+79.26	404.51	38+78.92	404.59	38+78.58	404.44	38+78.24	404.32	38+77.90	404.43
	0.1L	38+89.57	405.00	38+89.23	404.40	38+88.89	404.60	38+88.55	404.69	38+88.21	404.54	38+87.86	404.42	38+87.52	404.53
	0.2L	38+99.20	405.04	38+98.85	404.45	38+98.51	404.65	38+98.17	404.74	38+97.83	404.59	38+97.49	404.47	38+97.15	404.59
	0.3L	39+08.82	405.04	39+08.48	404.44	39+08.14	404.65	39+07.80	404.74	39+07.46	404.59	39+07.11	404.48	39+06.77	404.59
	0.4L	39+18.45	404.98	39+18.10	404.39	39+17.76	404.60	39+17.42	404.69	39+17.08	404.54	39+16.74	404.43	39+16.40	404.55
	0.5L	39+28.07	404.88	39+27.73	404.28	39+27.39	404.49	39+27.05	404.59	39+26.71	404.44	39+26.36	404.33	39+26.02	404.45
	0.6L	39+37.70	404.72	39+37.35	404.13	39+37.01	404.34	39+36.67	404.44	39+36.33	404.29	39+35.99	404.18	39+35.65	404.30
	0.7L	39+47.32	404.51	39+46.98	403.92	39+46.64	404.14	39+46.30	404.24	39+45.96	404.09	39+45.61	403.98	39+45.27	404.11
	0.8L	39+56.95	404.25	39+56.60	403.67	39+56.26	403.88	39+55.92	403.98	39+55.58	403.84	39+55.24	403.73	39+54.90	403.86
	0.9L	39+66.57	403.94	39+66.23	403.36	39+65.89	403.58	39+65.55	403.68	39+65.21	403.54	39+64.86	403.43	39+64.52	403.56
	℄ BRG ABUT 2	39+76.20	403.58	39+75.85	403.00	39+75.51	403.22	39+75.17	403.32	39+74.83	403.19	39+74.49	403.08	39+74.15	403.21

FINISHED DECK ELEVATIONS AT BREAK POINTS

STATION	A	B	C	D (PGL)	E	F	G	H
36+51.52	- - -	- - -	- - -	- - -	- - -	- - -	- - -	393.29
36+51.97	- - -	- - -	- - -	- - -	- - -	- - -	393.16	393.31
36+52.04	- - -	- - -	- - -	- - -	- - -	393.08	393.17	393.32
36+52.22	- - -	- - -	- - -	- - -	393.25	393.09	393.18	393.33
36+52.72	- - -	- - -	- - -	393.50	393.28	393.12	393.20	393.35
36+53.21	- - -	- - -	393.31	393.53	393.31	393.15	393.23	393.38
36+53.48	- - -	393.08	393.32	393.54	393.32	393.16	393.25	393.40
36+53.78	393.87	393.10	393.34	393.56	393.34	393.18	393.26	393.41
36+60.00	394.22	393.46	393.70	393.92	393.70	393.54	393.62	393.77
36+70.00	394.79	394.03	394.27	394.49	394.27	394.11	394.19	394.34
36+80.00	395.36	394.60	394.84	395.06	394.84	394.68	394.76	394.91
36+81.52	395.45	394.68	394.92	395.14	394.92	394.76	394.84	394.99
36+81.97	395.47	394.71	394.95	395.17	394.95	394.79	394.87	395.02
36+82.04	395.48	394.71	394.95	395.17	394.95	394.79	394.87	395.02
36+82.22	395.49	394.72	394.96	395.18	394.96	394.80	394.89	395.04
36+82.72	395.52	394.75	394.99	395.21	394.99	394.83	394.91	395.06
36+83.21	395.54	394.78	395.02	395.24	395.02	394.86	394.94	395.09
36+83.48	395.56	394.79	395.03	395.25	395.03	394.87	394.96	395.11
36+83.78	395.58	394.81	395.05	395.27	395.05	394.89	394.97	395.12
36+90.00	395.93	395.16	395.40	395.62	395.40	395.24	395.33	395.48
37+00.00	396.50	395.73	395.97	396.19	395.97	395.81	395.90	396.05
37+10.00	397.07	396.30	396.54	396.76	396.54	396.38	396.47	396.62
37+20.00	397.64	396.87	397.11	397.33	397.11	396.95	397.04	397.19
37+30.00	398.21	397.44	397.68	397.90	397.68	397.52	397.61	397.76
37+40.00	398.78	398.01	398.25	398.47	398.25	398.09	398.18	398.33
37+50.00	399.35	398.58	398.82	399.04	398.82	398.66	398.75	398.90
37+60.00	399.92	399.15	399.39	399.61	399.39	399.23	399.32	399.47
37+70.00	400.49	399.72	399.96	400.18	399.96	399.80	399.89	400.04
37+80.00	401.06	400.29	400.53	400.75	400.53	400.37	400.46	400.61
37+90.00	401.63	400.86	401.10	401.32	401.10	400.94	401.03	401.18
38+00.00	402.20	401.43	401.67	401.89	401.67	401.51	401.60	401.75
38+10.00	402.73	401.97	402.21	402.43	402.21	402.05	402.13	402.28
38+20.00	403.21	402.45	402.69	402.91	402.69	402.53	402.61	402.76
38+30.00	403.64	402.87	403.11	403.33	403.11	402.95	403.03	403.18

ELEVATIONS GIVEN AT THE FIRST AND LAST STATIONS FOR EACH BREAK POINT ARE LOCATED AT THE BEGIN NEAR APPROACH SLAB AND END FAR APPROACH SLAB, RESPECTIVELY.

FINISHED DECK ELEVATIONS AT BREAK POINTS

STATION	A	B	C	D (PGL)	E	F	G	H
38+40.00	404.01	403.24	403.48	403.70	403.48	403.32	403.40	403.55
38+50.00	404.32	403.56	403.80	404.02	403.80	403.64	403.72	403.87
38+60.00	404.58	403.82	404.06	404.28	404.06	403.90	403.98	404.13
38+70.00	404.79	404.02	404.26	404.48	404.26	404.10	404.19	404.34
38+80.00	404.94	404.18	404.42	404.64	404.42	404.26	404.34	404.49
38+90.00	405.04	404.27	404.51	404.73	404.51	404.35	404.44	404.59
39+00.00	405.08	404.32	404.56	404.78	404.56	404.40	404.48	404.63
39+10.00	405.07	404.31	404.55	404.77	404.55	404.39	404.47	404.62
39+20.00	405.00	404.24	404.48	404.70	404.48	404.32	404.40	404.55
39+30.00	404.88	404.12	404.36	404.58	404.36	404.20	404.28	404.43
39+40.00	404.71	403.94	404.18	404.40	404.18	404.02	404.11	404.26
39+50.00	404.48	403.71	403.95	404.17	403.95	403.79	403.88	404.03
39+60.00	404.20	403.43	403.67	403.89	403.67	403.51	403.59	403.74
39+70.00	403.86	403.09	403.33	403.55	403.33	403.17	403.25	403.40
39+74.56	403.68	402.92	403.16	403.38	403.16	403.00	403.08	403.23
39+75.01	403.67	402.90	403.14	403.36	403.14	402.98	403.06	403.21
39+75.09	403.66	402.90	403.14	403.36	403.14	402.98	403.06	403.21
39+75.27	403.66	402.89	403.13	403.35	403.13	402.97	403.05	403.20
39+75.76	403.64	402.87	403.11	403.33	403.11	402.95	403.03	403.18
39+76.26	403.62	402.85	403.09	403.31	403.09	402.93	403.01	403.16
39+76.53	403.61	402.84	403.08	403.30	403.08	402.92	403.00	403.15
39+76.83	403.59	402.83	403.07	403.29	403.07	402.91	402.99	403.14
39+80.00	403.46	402.70	402.94	403.16	402.94	402.78	402.86	403.01
39+90.00	403.02	402.25	402.49	402.71	402.49	402.33	402.41	402.56
40+00.00	402.51	401.75	401.99	402.21	401.99	401.83	401.91	402.06
40+04.56	402.28	401.51	401.75	401.97	401.75	401.59	401.67	401.82
40+05.01	402.25	401.49	401.73	401.95	401.73	401.57	401.65	- - -
40+05.09	402.25	401.48	401.72	401.94	401.72	401.56	- - -	- - -
40+05.27	402.24	401.47	401.71	401.93	401.71	- - -	- - -	- - -
40+05.76	402.21	401.45	401.69	401.91	- - -	- - -	- - -	- - -
40+06.26	402.19	401.42	401.66	- - -	- - -	- - -	- - -	- - -
40+06.53	402.17	401.41	- - -	- - -	- - -	- - -	- - -	- - -
40+06.83	402.16	- - -	- - -	- - -	- - -	- - -	- - -	- - -

REFERENCES:	SHEETS:
GENERAL PLAN	1
GENERAL NOTES	4 & 5
FRAMING PLAN	43
SLAB PLANS	48 & 49
SLAB TYPICAL SECTIONS	50 & 51

Mark	Description	By	Chk'd	Recm'd	Date
	REVISIONS				

SR 3013 PREVIOUSLY KNOWN AS LR 22075
BMS STR ID: 22-3013-0020-0291 MPMS/ECMS PROJ: 97828 BRKEY: 67416

HNTB

COMMONWEALTH OF PENNSYLVANIA
DEPARTMENT OF TRANSPORTATION

COMMONWEALTH OF PENNSYLVANIA REGISTERED PROFESSIONAL JUSTIN ROBERT MCCARTHY ENGINEER PE076998

DAUPHIN COUNTY
SR 0083 SECTION 079
SEG 0020 OFFSET 0291
SR 3013 (29TH STREET) STA 37+78.24 OVER
SR 0083 & NORFOLK SOUTHERN RAILWAY COMPANY
3-SPAN CONTINUOUS COMPOSITE PS CONCRETE
PA BULB-TEE BEAM BRIDGE
DECK ELEVATIONS

PREPARED BY:
HNTB CORPORATION
4507 NORTH FRONT STREET
SUITE 300
HARRISBURG, PA 17110

RECOMMENDED 12-6-2022

SHEET 58 OF 93

S-39451

6/23/2022
FILENAME: 63016-s-brB1-dek01.dgn

DES: MCA	DES CKD: JRM	DWG: SMZ	DWG CKD: JRM

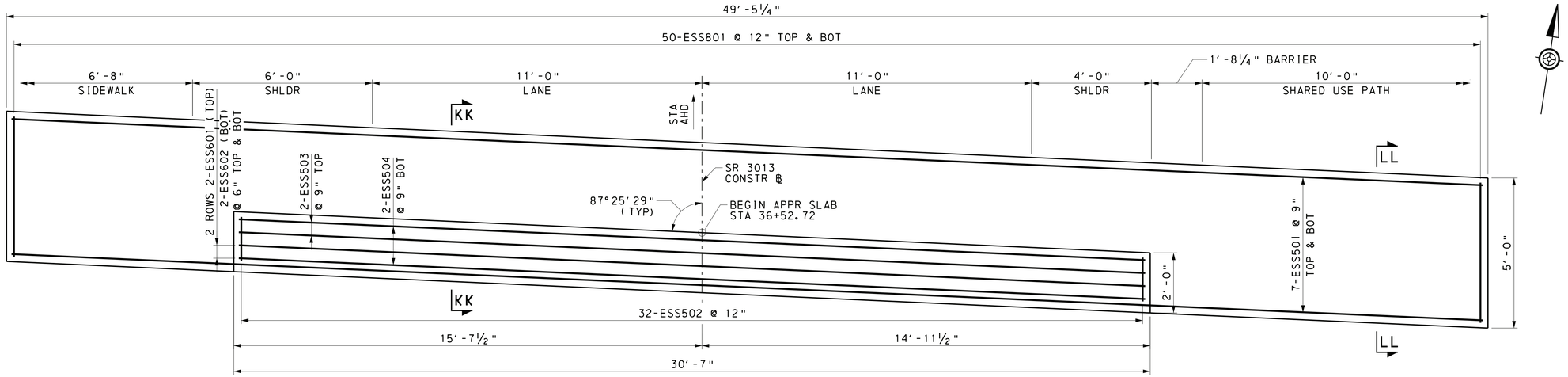

NEAR SLEEPER SLAB PLAN

1 0 1 2 FEET

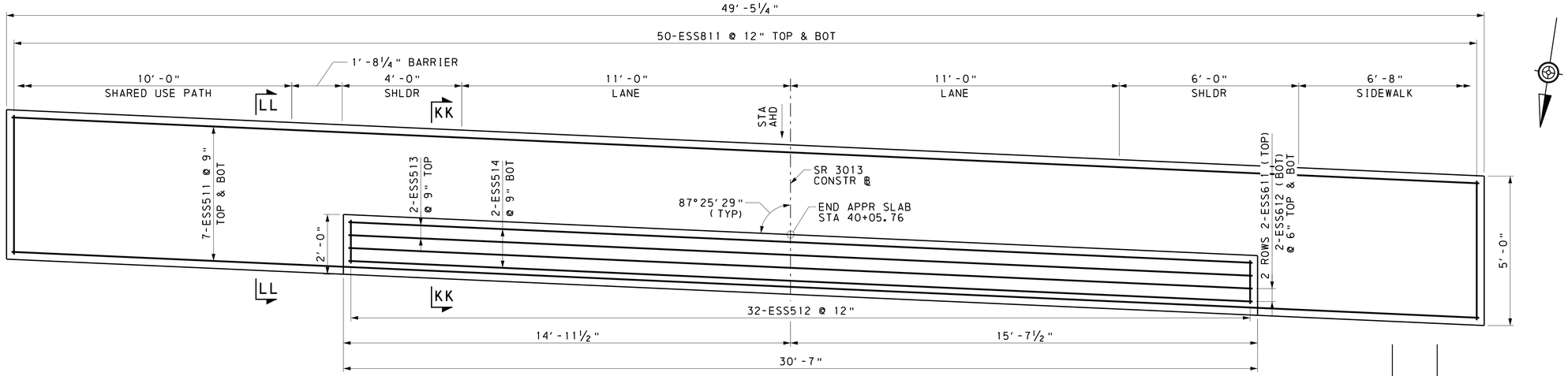

FAR SLEEPER SLAB PLAN

1 0 1 2 FEET

Mark	Description	By	Chk'd	Recm'd	Date

REVISIONS

SR 3013 PREVIOUSLY KNOWN AS LR 22075
BMS STR ID: 22-3013-0020-0291 MPMS/ECMS PROJ: 97828 BRKEY: 67416

HNTB

COMMONWEALTH OF PENNSYLVANIA
DEPARTMENT OF TRANSPORTATION

DAUPHIN COUNTY
SR 0083 SECTION 079
SEG 0020 OFFSET 0291
SR 3013 (29TH STREET) STA 37+78.24 OVER
SR 0083 & NORFOLK SOUTHERN RAILWAY COMPANY
3-SPAN CONTINUOUS COMPOSITE PS CONCRETE
PA BULB-TEE BEAM BRIDGE
SLEEPER SLAB PLANS

COMMONWEALTH OF PENNSYLVANIA
REGISTERED PROFESSIONAL
JUSTIN ROBERT MCCARTHY
ENGINEER
PE076998

PREPARED BY:
HNTB CORPORATION
4507 NORTH FRONT STREET
SUITE 300
HARRISBURG, PA 17110

RECOMMENDED 12-6-2022

SHEET 59 OF 93

S-39451

NOTES:

1. APPROACH SLABS AND MOMENT SLABS NOT SHOWN FOR CLARITY.
2. REFER TO SHEET 63 FOR SECTIONS KK-KK & LL-LL.

REFERENCES:	SHEETS:
GENERAL PLAN	1
MOMENT SLAB GENERAL PLANS	2
GENERAL NOTES	4 & 5
APPROACH SLAB PLANS	60 & 61
APPROACH SLAB SECTIONS	62
APPROACH SLAB DETAILS	63 - 65

6/23/2022
FILENAME: 63016-s-brB1-sps01.dgn

DES: MCA	DES CKD: JRM	DWG: MCA	DWG CKD: JRM

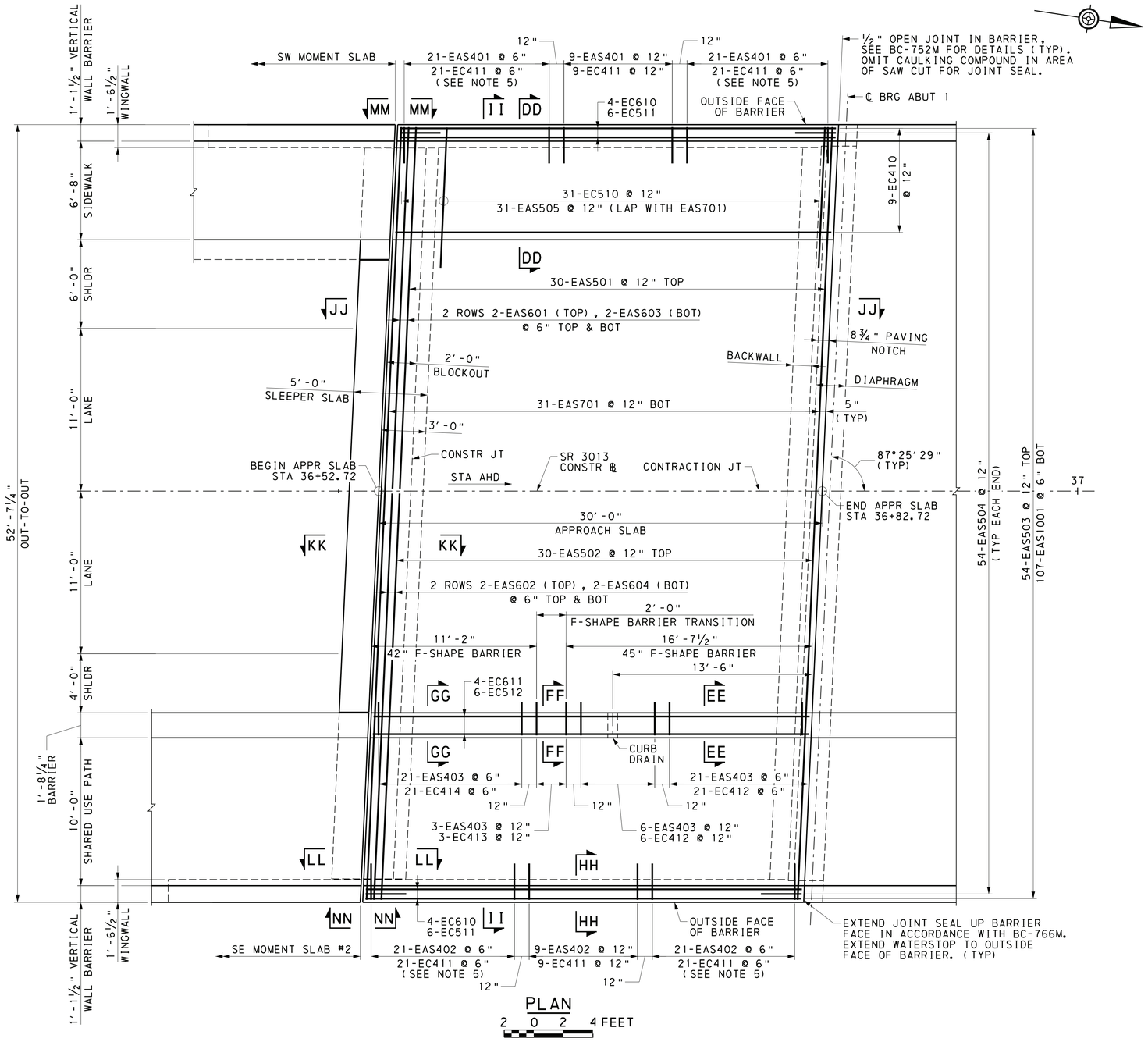

PLAN

2 0 2 4 FEET

NOTES:

1. CONSTRUCT BRIDGE APPROACH SLAB AFTER THE BRIDGE DECK IS CONSTRUCTED.
2. PLACE CONCRETE IN ONE CONTINUOUS OPERATION, UNLESS OTHERWISE INDICATED OR DIRECTED.
3. TRANSVERSE CONSTRUCTION JOINTS ARE NOT PERMITED IN THE CONCRETE APPROACH SLAB OR SLEEPER SLAB, UNLESS OTHERWISE INDICATED.
4. BURN OFF, TO TOP OF BEAM, REINFORCEMENT AND/OR LIFTING DEVICES PROTRUDING INTO APPROACH SLAB.
5. PROVIDE ONE ADDITIONAL EC411 BAR ON EACH SIDE OF LIGHTING BLOCKOUT (LAP WITH EAS401/EAS402). ADJUST REINFORCEMENT AS REQUIRED TO ACCOMMODATE PLACEMENT OF JUNCTION BOXES AND LIGHTING BLOCKOUTS.

Mark	Description	By	Chk'd	Recm'd	Date
REVISIONS					

SR 3013 PREVIOUSLY KNOWN AS LR 22075
BMS STR ID: 22-3013-0020-0291 MPMS/ECMS PROJ: 97828 BRKEY: 67416

REFERENCES:

	SHEETS:
GENERAL PLAN	1
GENERAL NOTES	4 & 5
DIAPHRAGM DETAILS	54 - 56
SLEEPER SLAB PLANS	59
APPROACH SLAB SECTIONS	62
APPROACH SLAB DETAILS	63 - 65

HNTB

COMMONWEALTH OF PENNSYLVANIA REGISTERED PROFESSIONAL JUSTIN ROBERT MCCARTHY ENGINEER PE076998

PREPARED BY:
HNTB CORPORATION
4507 NORTH FRONT STREET
SUITE 300
HARRISBURG, PA 17110

COMMONWEALTH OF PENNSYLVANIA
DEPARTMENT OF TRANSPORTATION

DAUPHIN COUNTY
SR 0083 SECTION 079
SEG 0020 OFFSET 0291
SR 3013 (29TH STREET) STA 37+78.24 OVER
SR 0083 & NORFOLK SOUTHERN RAILWAY COMPANY
3-SPAN CONTINUOUS COMPOSITE PS CONCRETE
PA BULB-TEE BEAM BRIDGE
NEAR APPROACH SLAB PLAN

RECOMMENDED 12-6-2022

SHEET 60 OF 93

S-39451

6/23/2022
FILENAME: 63016-s-brB1-gps01.dgn

DES: MCA | DES CKD: JRM | DWG: SMZ | DWG CKD: JRM

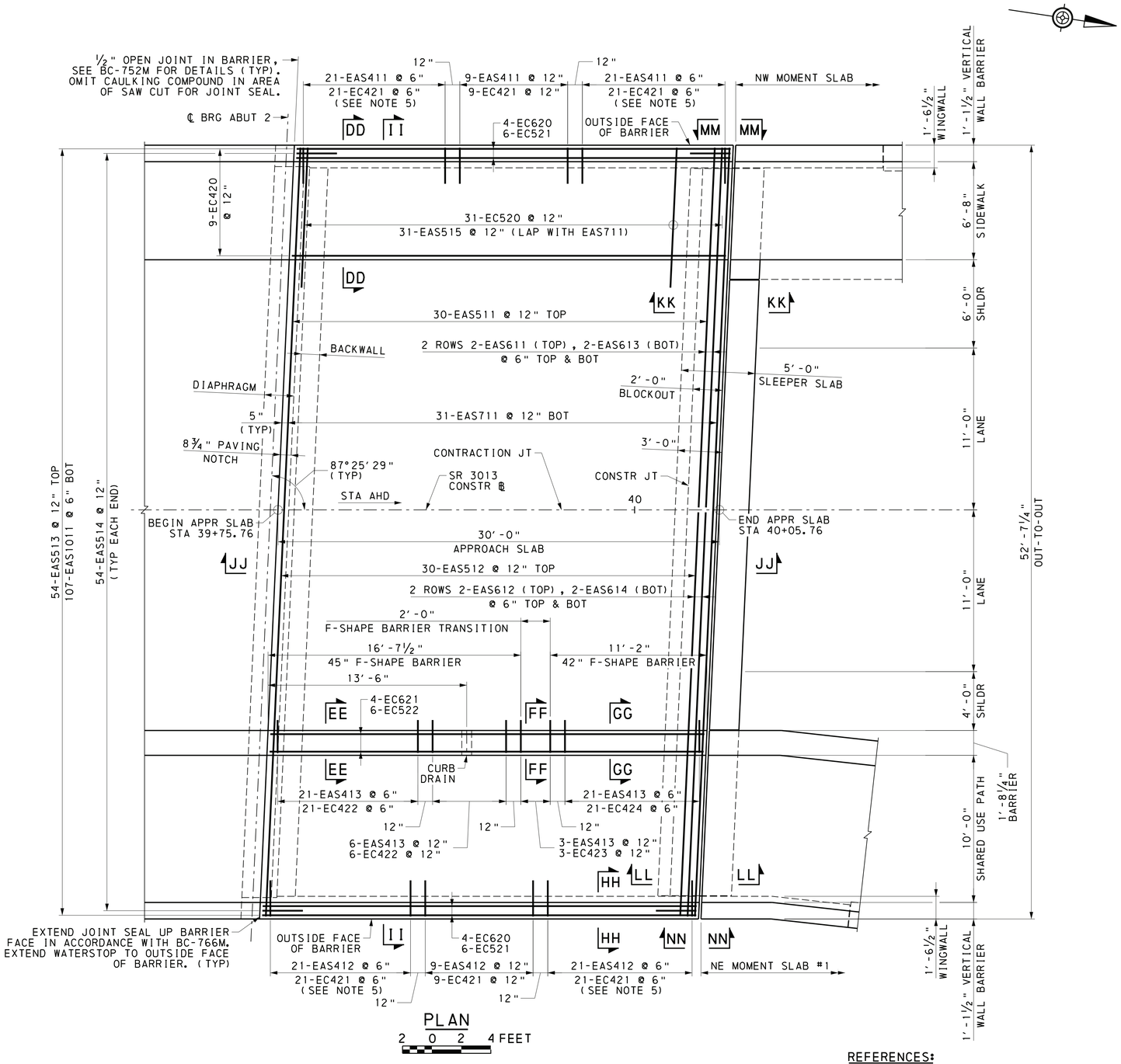

PLAN

2 0 2 4 FEET

NOTES:

1. CONSTRUCT BRIDGE APPROACH SLAB AFTER THE BRIDGE DECK IS CONSTRUCTED.
2. PLACE CONCRETE IN ONE CONTINUOUS OPERATION, UNLESS OTHERWISE INDICATED OR DIRECTED.
3. TRANSVERSE CONSTRUCTION JOINTS ARE NOT PERMITED IN THE CONCRETE APPROACH SLAB OR SLEEPER SLAB, UNLESS OTHERWISE INDICATED.
4. BURN OFF, TO TOP OF BEAM, REINFORCEMENT AND/OR LIFTING DEVICES PROTRUDING INTO APPROACH SLAB.
5. PROVIDE ONE ADDITIONAL EC421 BAR ON EACH SIDE OF LIGHTING BLOCKOUT (LAP WITH EAS411/EAS412). ADJUST REINFORCEMENT AS REQUIRED TO ACCOMMODATE PLACEMENT OF JUNCTION BOXES AND LIGHTING BLOCKOUTS.

Mark	Description	By	Chk'd	Recm'd	Date
REVISIONS					

SR 3013 PREVIOUSLY KNOWN AS LR 22075
BMS STR ID: 22-3013-0020-0291 MPMS/ECMS PROJ: 97828 BRKEY: 67416

REFERENCES:

	SHEETS:
GENERAL PLAN	1
GENERAL NOTES	4 & 5
DIAPHRAGM DETAILS	54 - 56
SLEEPER SLAB PLANS	59
APPROACH SLAB SECTIONS	62
APPROACH SLAB DETAILS	63 - 65

HNTB

COMMONWEALTH OF PENNSYLVANIA
REGISTERED PROFESSIONAL
JUSTIN ROBERT MCCARTHY
ENGINEER
PE076998

PREPARED BY:
HNTB CORPORATION
4507 NORTH FRONT STREET
SUITE 300
HARRISBURG, PA 17110

COMMONWEALTH OF PENNSYLVANIA
DEPARTMENT OF TRANSPORTATION

DAUPHIN COUNTY
SR 0083 SECTION 079
SEG 0020 OFFSET 0291
SR 3013 (29TH STREET) STA 37+78.24 OVER
SR 0083 & NORFOLK SOUTHERN RAILWAY COMPANY

3-SPAN CONTINUOUS COMPOSITE PS CONCRETE
PA BULB-TEE BEAM BRIDGE

FAR APPROACH SLAB PLAN

RECOMMENDED 12-6-2022

SHEET 61 OF 93

S-39451

6/23/2022
FILENAME: 63016-s-br01-gps02.dgn

DES: MCA | DES CKD: JRM | DWG: SMZ | DWG CKD: JRM

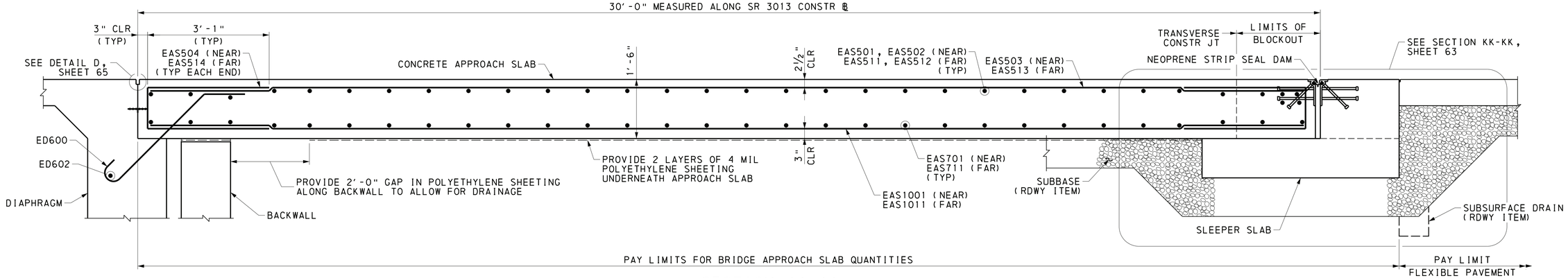

SECTION JJ-JJ

12 0 12 INCHES

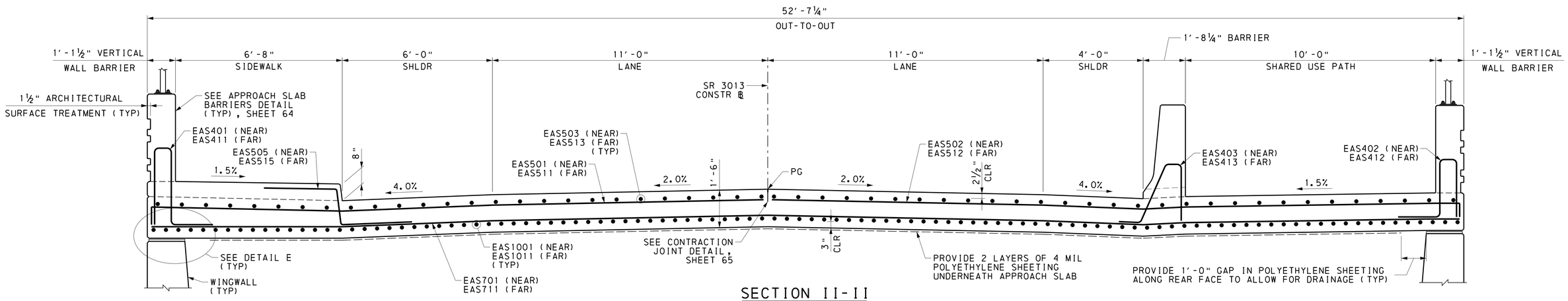

SECTION II-II

1 0 1 2 FEET

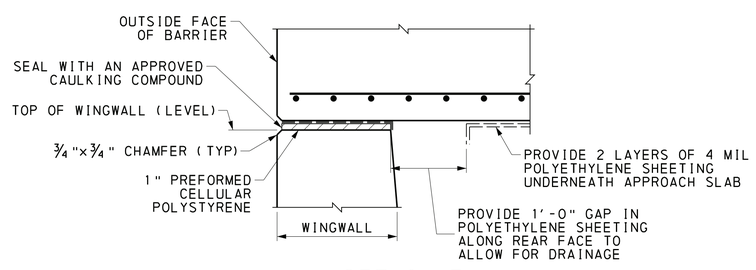

DETAIL E

6 0 6 12 INCHES

REFERENCES:	SHEETS:
GENERAL PLAN	1
GENERAL NOTES	4 & 5
DIAPHRAGM DETAILS	54 - 56
SLEEPER SLAB PLANS	59
APPROACH SLAB PLANS	60 & 61
APPROACH SLAB DETAILS	63 - 65
BARRIER ARCHITECTURAL DETAILS	81 & 82

Mark	Description	By	Chk'd	Recm'd	Date
REVISIONS					

SR 3013 PREVIOUSLY KNOWN AS LR 22075
BMS STR ID: 22-3013-0020-0291 MPMS/ECMS PROJ: 97828 BRKEY: 67416

HNTB

COMMONWEALTH OF PENNSYLVANIA REGISTERED PROFESSIONAL JUSTIN ROBERT MCCARTHY ENGINEER PE076998

PREPARED BY:
HNTB CORPORATION
4507 NORTH FRONT STREET
SUITE 300
HARRISBURG, PA 17110

COMMONWEALTH OF PENNSYLVANIA
DEPARTMENT OF TRANSPORTATION

DAUPHIN COUNTY
SR 0083 SECTION 079
SEG 0020 OFFSET 0291
SR 3013 (29TH STREET) STA 37+78.24 OVER
SR 0083 & NORFOLK SOUTHERN RAILWAY COMPANY

3-SPAN CONTINUOUS COMPOSITE PS CONCRETE
PA BULB-TEE BEAM BRIDGE

APPROACH SLAB SECTIONS

RECOMMENDED 12-6-2022

SHEET 62 OF 93

S-39451

6/23/2022
FILENAME 63016-s-brB1-aps03.dgn

DES: MCA | DES CKD: JRM | DWG: SMZ | DWG CKD: JRM

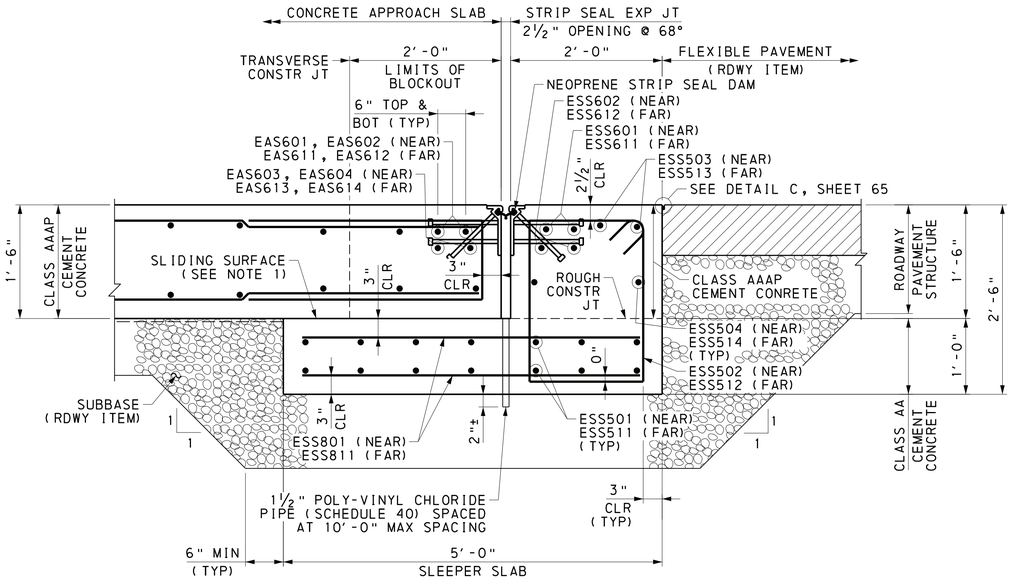

SECTION KK-KK

6 0 6 12 INCHES

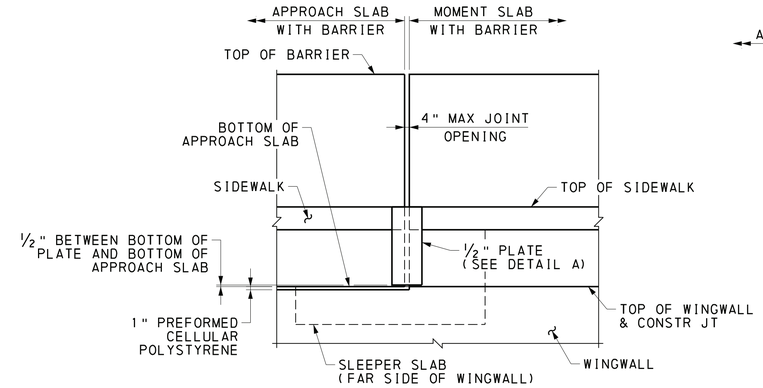

VIEW MM-MM

1 0 1 2 FEET

(NEAR LEFT SHOWN, FAR LEFT SIMILAR BY OPPOSITE HAND)

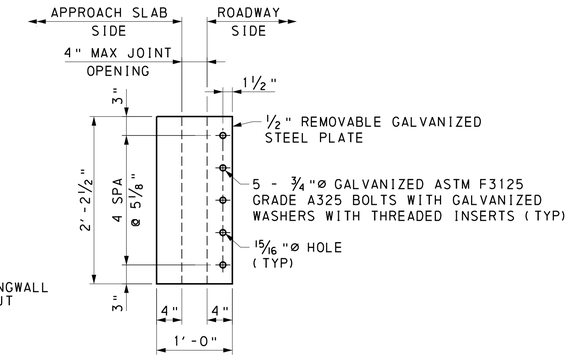

DETAIL A

6 0 6 12 INCHES

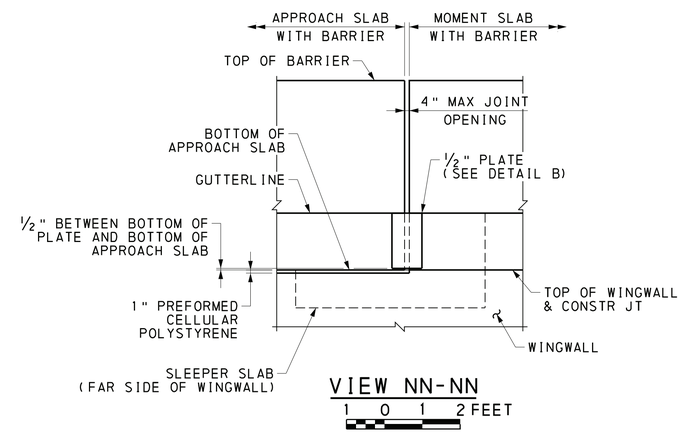

VIEW NN-NN

1 0 1 2 FEET

(FAR RIGHT SHOWN, NEAR RIGHT SIMILAR BY OPPOSITE HAND)

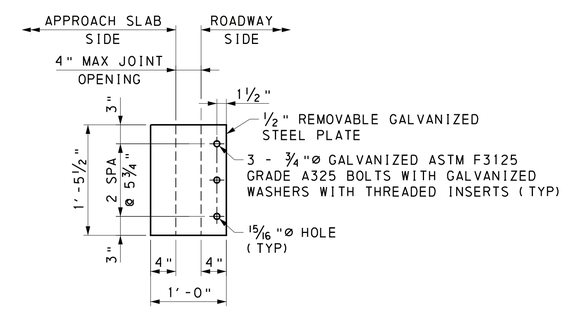

DETAIL B

6 0 6 12 INCHES

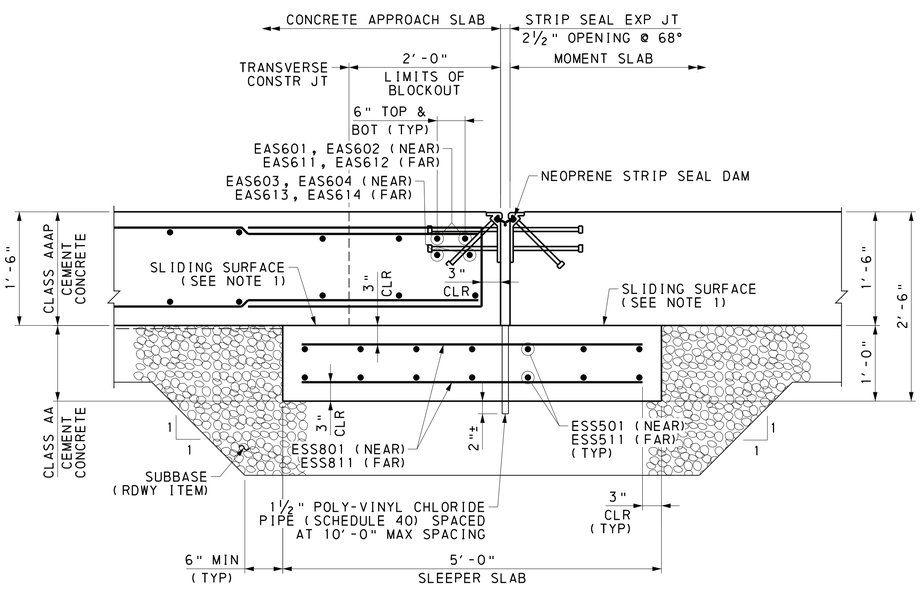

SECTION LL-LL

6 0 6 12 INCHES

(FAR RIGHT SHOWN, FAR LEFT SIMILAR WITH SIDEWALK)
(NEAR SIMILAR BY OPPOSITE HAND)

NOTES:

1. TROWEL SMOOTH AND PLACE 2 LAYERS OF 4 MIL POLYETHYLENE SHEETING AS BOND BREAKER.

REFERENCES:	SHEETS:
GENERAL PLAN	1
GENERAL NOTES	4 & 5
SLEEPER SLAB PLANS	59
APPROACH SLAB PLANS	60 & 61
APPROACH SLAB SECTIONS	62

Mark	Description	By	Chk'd	Recm'd	Date

REVISIONS

SR 3013 PREVIOUSLY KNOWN AS LR 22075
BMS STR ID: 22-3013-0020-0291 MPMS/ECMS PROJ: 97828 BRKEY: 67416

HNTB

COMMONWEALTH OF PENNSYLVANIA
REGISTERED PROFESSIONAL
JUSTIN ROBERT MCCARTHY
ENGINEER
PE076998

PREPARED BY:
HNTB CORPORATION
4507 NORTH FRONT STREET
SUITE 300
HARRISBURG, PA 17110

COMMONWEALTH OF PENNSYLVANIA
DEPARTMENT OF TRANSPORTATION

DAUPHIN COUNTY
SR 0083 SECTION 079
SEG 0020 OFFSET 0291
SR 3013 (29TH STREET) STA 37+78.24 OVER
SR 0083 & NORFOLK SOUTHERN RAILWAY COMPANY
3-SPAN CONTINUOUS COMPOSITE PS CONCRETE
PA BULB-TEE BEAM BRIDGE
APPROACH SLAB DETAILS 1

RECOMMENDED 12-6-2022

SHEET 63 OF 93

S-39451

6/23/2022
FILENAME: 63016-s-br81-aps04.dgn

DES: MCA | DES CKD: JRM | DWG: SMZ | DWG CKD: JRM

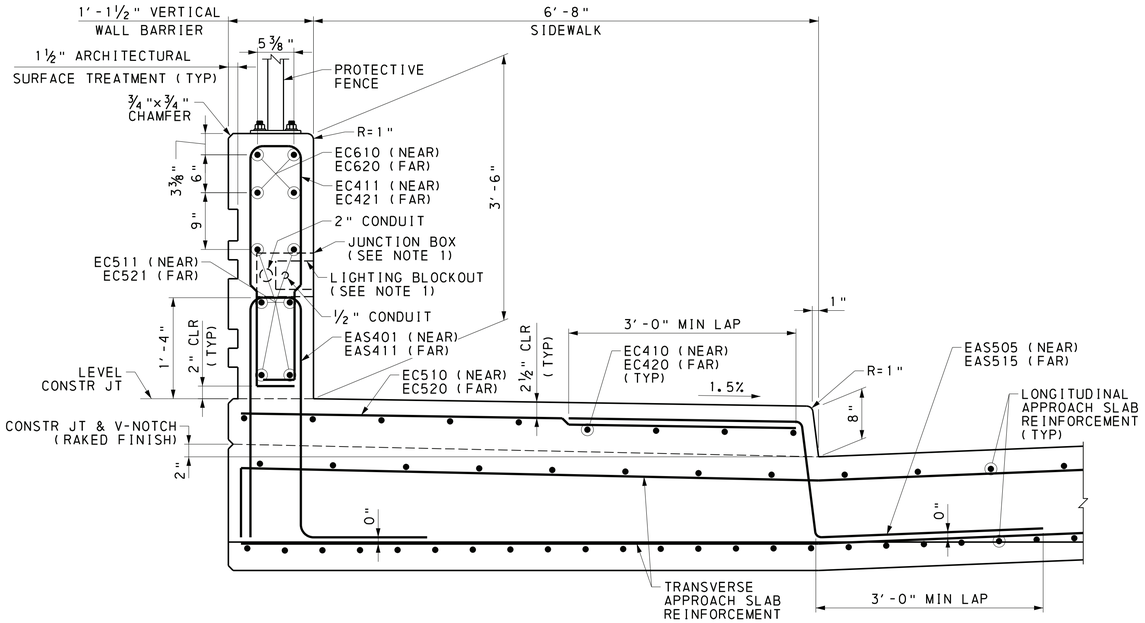

SECTION DD-DD

6 0 6 12 INCHES

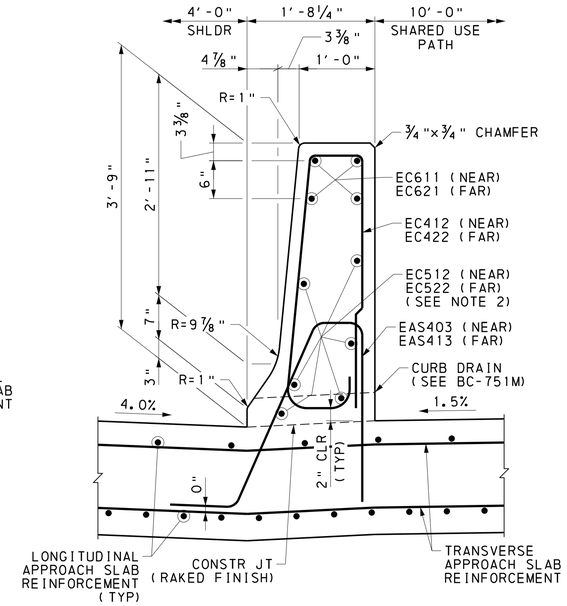

SECTION EE-EE

6 0 6 12 INCHES

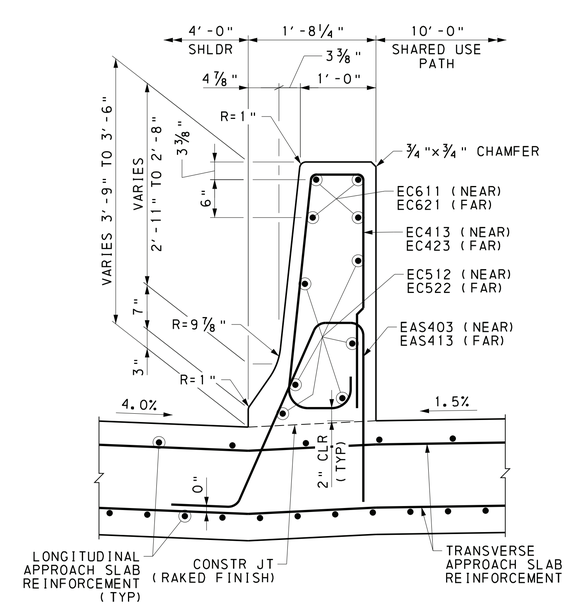

SECTION FF-FF

6 0 6 12 INCHES

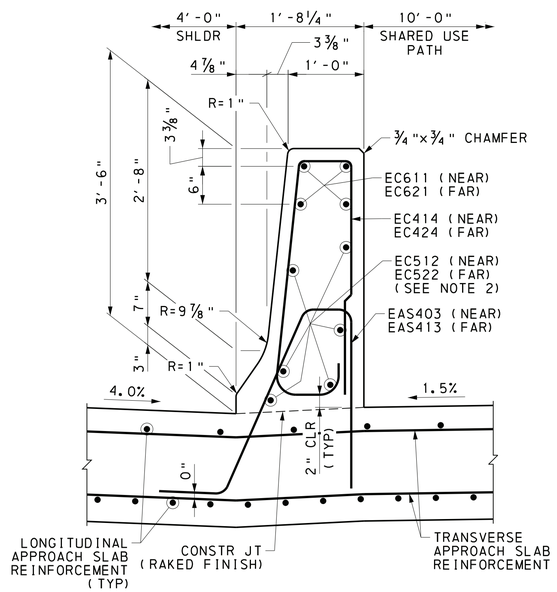

SECTION GG-GG

6 0 6 12 INCHES

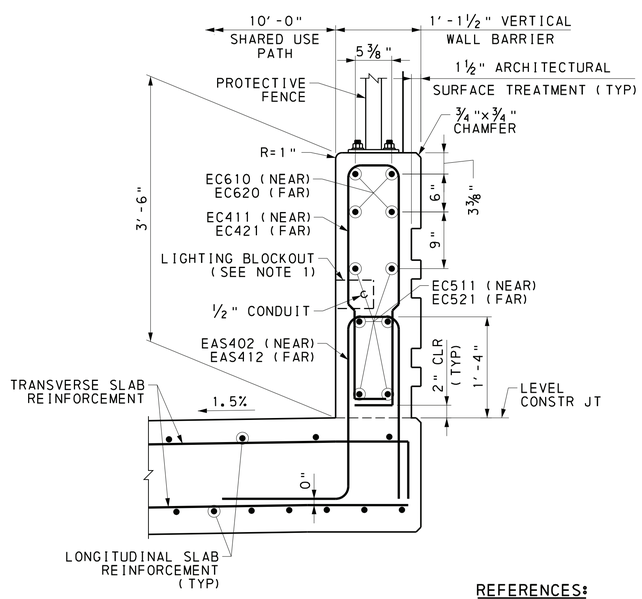

SECTION HH-HH

6 0 6 12 INCHES

NOTES:

1. PROVIDE ONE ADDITIONAL EC411/EC421 BAR ON EACH SIDE OF BARRIER LIGHTING BLOCKOUT (LAP WITH EAS401/EAS411 OR EAS402/EAS412). ADJUST REINFORCEMENT AS REQUIRED TO ACCOMMODATE PLACEMENT OF JUNCTION BOXES AND LIGHTING BLOCKOUTS. SEE HIGHWAY LIGHTING ALSO PLAN FOR PLACEMENT OF JUNCTION BOXES AND LUMINAIRES.

2. FIELD ADJUST EC512 AND EC522 BARS IN BARRIER AT CURB DRAIN LOCATIONS AS REQUIRED.

Mark	Description	By	Chk'd	Recm'd	Date
REVISIONS					

SR 3013 PREVIOUSLY KNOWN AS LR 22075
BMS STR ID: 22-3013-0020-0291 MPMS/ECMS PROJ: 97828 BRKEY: 67416

REFERENCES:	SHEETS:
GENERAL PLAN	1
GENERAL NOTES	4 & 5
APPROACH SLAB PLANS	60 & 61
APPROACH SLAB SECTIONS	62
BARRIER ARCHITECTURAL DETAILS	81 & 82

HNTB

COMMONWEALTH OF PENNSYLVANIA
REGISTERED PROFESSIONAL
JUSTIN ROBERT MCCARTHY
ENGINEER
PE076998

PREPARED BY:
HNTB CORPORATION
4507 NORTH FRONT STREET
SUITE 300
HARRISBURG, PA 17110

COMMONWEALTH OF PENNSYLVANIA
DEPARTMENT OF TRANSPORTATION

DAUPHIN COUNTY
SR 0083 SECTION 079
SEG 0020 OFFSET 0291
SR 3013 (29TH STREET) STA 37+78.24 OVER
SR 0083 & NORFOLK SOUTHERN RAILWAY COMPANY
3-SPAN CONTINUOUS COMPOSITE PS CONCRETE
PA BULB-TEE BEAM BRIDGE
APPROACH SLAB DETAILS 2

RECOMMENDED 12-6-2022

SHEET 64 OF 93

S-39451

DES: MCA	DES CKD: JRM	DWG: SMZ	DWG CKD: JRM

6/23/2022
FILENAME: 63016-s-brB1-aps05.dgn

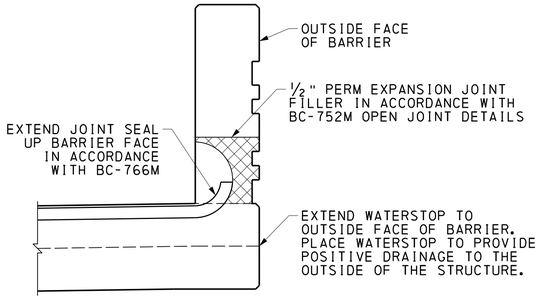

JOINT SEAL AND WATERSTOP TERMINATION DETAIL

12 0 12 INCHES

(RIGHT BARRIER SHOWN, LEFT BARRIER SIMILAR)

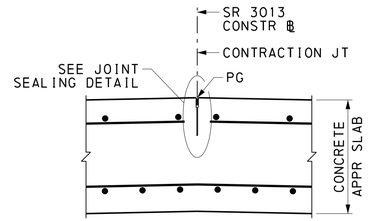

CONTRACTION JOINT DETAIL

6 0 6 12 INCHES

NOTE: TOP REINFORCEMENT NOT CONTINUOUS THRU JOINT. BOTTOM REINFORCEMENT CONTINUOUS THRU JOINT.

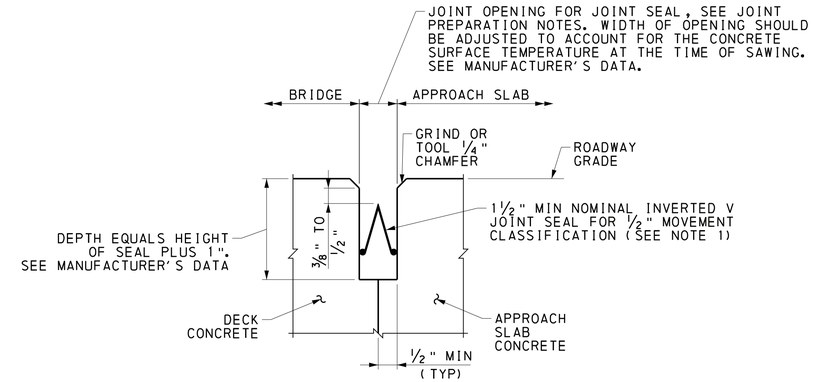

DETAIL D

NOT TO SCALE

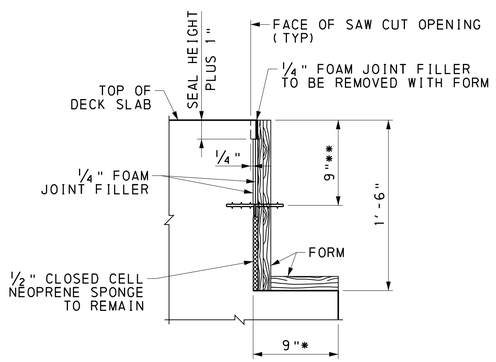

PAVING NOTCH FORMING DETAIL

NOT TO SCALE

* MEASURED NORMAL TO ABUTMENT

** AN EXPANSION WATERSTOP (TYPE E1 OR E2), IN ACCORDANCE WITH BC-735M, MUST BE INSTALLED AT MID-DEPTH OF APPROACH SLAB. PLACE WATERSTOP TO PROVIDE POSITIVE DRAINAGE TO THE OUTSIDE OF THE STRUCTURE.

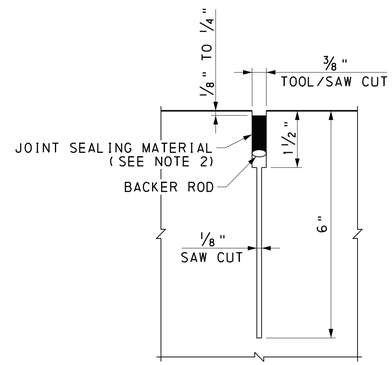

JOINT SEALING DETAIL

NOT TO SCALE

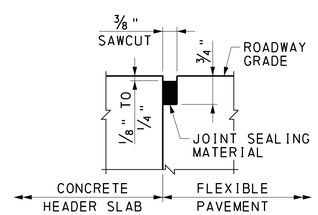

DETAIL C

NOT TO SCALE

JOINT PREPARATION NOTES:

1. THE JOINT OPENING IS TO BE FORMED BY A TWO-STAGE SAWING OPERATION WHERE ACCESSIBLE. WHERE ACCESSIBILITY IS LIMITED, THE JOINT OPENING SHALL BE FORMED. THE FIRST SAW CUT IS DESIGNED TO CONTROL CRACKING. THE SECOND SAW CUT IS MADE USING A DOUBLE-BLADED WATER-COOLED SAW CAPABLE OF HOLDING A TOLERANCE OF ±1/16" TO CREATE THE PROPER OPENING FOR THE PREFORMED NEOPRENE COMPRESSION SEAL OR INVERTED V JOINT SEAL.
2. WATER BLAST OPENING IMMEDIATELY FOLLOWING SAW CUTTING OPERATION TO REMOVE ANY RESIDUAL SLURRY BEFORE IT DRIES.
3. THE DEPTH OF THE JOINT OPENING EQUALS THE HEIGHT OF THE SEAL PLUS 1". THE WIDTH OF THE SECOND SAW CUT SHOULD BE ADJUSTED TO ACCOUNT FOR THE CONCRETE SURFACE TEMPERATURE AT THE TIME OF SAWING, SEE MANUFACTURER'S PRODUCT INFORMATION.
4. BEFORE INSTALLING THE SEAL, ABRASIVE BLAST THE BONDING SURFACES TO THOROUGHLY CLEAN THE JOINT OPENING AND REMOVE FOREIGN MATERIAL, INCLUDING BROKEN CONCRETE. USE WATER AND OIL FREE COMPRESSED AIR TO BLOW OUT RESIDUE FROM THE SEAL GROOVE OPENING.
5. PREPARE BONDING SURFACES AND INSTALL JOINT SEAL IN ACCORDANCE WITH MANUFACTURER'S RECOMMENDATIONS.
6. DO NOT EXCEED 3% ELONGATION OF THE SEAL, IF STRETCHING OCCURS.

NOTES:

1. USE ONLY APPROVED SEALS, AS LISTED IN BULLETIN 15. INSTALL JOINT SEALS TO A UNIFORM DEPTH WITH THE TOP OF THE SEAL FROM 1/4" TO 1/2" BELOW THE LEVEL OF THE CHAMFER. MAKE THE TOP EDGES OF THE CONTACT SURFACES ON BOTH SIDES OF THE SEAL AT THE SAME ELEVATION.
2. FOR JOINT MATERIAL, REFER TO PUBLICATION 408 SECTIONS 501.2 AND 705.4(a), (b), OR (d).

REFERENCES:	SHEETS:
GENERAL PLAN	1
GENERAL NOTES	4 & 5
DIAPHRAGM DETAILS	54 - 56
APPROACH SLAB PLANS	60 & 61
APPROACH SLAB SECTIONS	62

Mark	Description	By	Chk'd	Recm'd	Date
REVISIONS					

SR 3013 PREVIOUSLY KNOWN AS LR 22075
BMS STR ID: 22-3013-0020-0291 MPMS/ECMS PROJ: 97828 BRKEY: 67416

HNTB

COMMONWEALTH OF PENNSYLVANIA
DEPARTMENT OF TRANSPORTATION

DAUPHIN COUNTY
SR 0083 SECTION 079
SEG 0020 OFFSET 0291
SR 3013 (29TH STREET) STA 37+78.24 OVER
SR 0083 & NORFOLK SOUTHERN RAILWAY COMPANY
3-SPAN CONTINUOUS COMPOSITE PS CONCRETE
PA BULB-TEE BEAM BRIDGE
APPROACH SLAB DETAILS 3

COMMONWEALTH OF PENNSYLVANIA REGISTERED PROFESSIONAL JUSTIN ROBERT MCCARTHY ENGINEER PE076998

PREPARED BY:
HNTB CORPORATION
4507 NORTH FRONT STREET
SUITE 300
HARRISBURG, PA 17110

RECOMMENDED 12-6-2022

SHEET 65 OF 93

S-39451

6/23/2022
FILENAME: 63016-s-brB1-aps06.dgn

DES: MCA	DES CKD: JRM	DWG: SMZ	DWG CKD: JRM

MARK	SIZE	NO REQ'D	LENGTH	TYPE	A	B	C	D	E	REMARKS
NEAR APPROACH SLAB										
EAS401	4	53	9'-3"	27	3'-4"	4"	3"	3'-2"	1'-6"	R = 2"
EAS402	4	53	7'-7"	27A	2'-6"	4"	3"	2'-4"	1'-6"	F = 1/4", R = 2"
EAS403	4	51	7'-7 1/2"	22A	2'-5"	2'-7"	1'-6"	3/4"		H = 1'-1 5/8", R = 2"
EAS501	5	30	25'-7"	77	24'-7"	1'-0"				
EAS502	5	30	28'-7"	77	27'-7"	1'-0"				
EAS503	5	54	29'-3"	STR						
EAS504	5	108	7'-2"	31	3'-1"	1'-0"	3'-1"			
EAS505	5	31	7'-7"	113	3'-0"	1'-7"	3'-0"	1/2"	2 3/8"	F = 1 1/2"
EAS601	6	2	25'-7"	77	24'-7"	1'-0"				
EAS602	6	2	28'-7"	77	27'-7"	1'-0"				
EAS603	6	2	24'-7"	STR						
EAS604	6	2	27'-7"	STR						
EAS701	7	31	52'-4"	STR						
EAS1001	10	107	29'-3"	STR						
EC410	4	9	29'-3"	STR						
EC411	4	106	7'-10"	10	2'-9"	4"	3"	2'-9"	5 1/2"	H = 3", R = 2"
EC412	4	27	8'-7"	17	3'-0 1/2"	3 3/8"	2'-10 3/4"	6 3/4"	5"	H = 3 3/8", R = 2"
EC413	4	3	8'-1" TO	17	2'-9 1/2" TO	3 3/8"	2'-7 3/4" TO	6 3/4"	5"	VARY A & C 3 EACH BY 1 1/2"
			8'-7"		3'-0 1/2"		2'-10 3/4"			H = 3 3/8", R = 2"
EC414	4	21	8'-1"	17	2'-9 1/2"	3 3/8"	2'-7 3/4"	6 3/4"	5"	H = 3 3/8", R = 2"
EC510	5	31	7'-4"	STR						
EC511	5	12	29'-3"	STR						
EC512	5	6	29'-3 1/4"	80	11'-0"	2'-0 1/4"	16'-3"		2'-0"	
EC610	6	8	29'-3"	STR						
EC611	6	4	29'-3 1/4"	80	11'-0"	2'-0 1/4"	16'-3"		2'-0"	
ESS501	5	14	49'-0"	STR						
ESS502	5	32	8'-0"	6	2'-0 1/2"	1'-6"	5 1/2"			
ESS503	5	2	32'-3"	31	1'-1"	30'-1"	1'-1"			
ESS504	5	2	30'-1"	STR						
ESS601	6	2	32'-3"	31	1'-1"	30'-1"	1'-1"			
ESS602	6	2	30'-1"	STR						
ESS801	8	100	4'-6"	STR						

MARK	SIZE	NO REQ'D	LENGTH	TYPE	A	B	C	D	E	REMARKS
FAR APPROACH SLAB										
EAS411	4	53	9'-3"	27	3'-4"	4"	3"	3'-2"	1'-6"	R = 2"
EAS412	4	53	7'-7"	27A	2'-6"	4"	3"	2'-4"	1'-6"	F = 1/4", R = 2"
EAS413	4	51	7'-7 1/2"	22A	2'-5"	2'-7"	1'-6"	3/4"		H = 1'-1 5/8", R = 2"
EAS511	5	30	25'-7"	77	24'-7"	1'-0"				
EAS512	5	30	28'-7"	77	27'-7"	1'-0"				
EAS513	5	54	29'-3"	STR						
EAS514	5	108	7'-2"	31	3'-1"	1'-0"	3'-1"			
EAS515	5	31	7'-7"	113	3'-0"	1'-7"	3'-0"	1/2"	2 3/8"	F = 1 1/2"
EAS611	6	2	25'-7"	77	24'-7"	1'-0"				
EAS612	6	2	28'-7"	77	27'-7"	1'-0"				
EAS613	6	2	24'-7"	STR						
EAS614	6	2	27'-7"	STR						
EAS711	7	31	52'-4"	STR						
EAS1011	10	107	29'-3"	STR						
EC420	4	9	29'-3"	STR						
EC421	4	106	7'-10"	10	2'-9"	4"	3"	2'-9"	5 1/2"	H = 3", R = 2"
EC422	4	27	8'-7"	17	3'-0 1/2"	3 3/8"	2'-10 3/4"	6 3/4"	5"	H = 3 3/8", R = 2"
EC423	4	3	8'-1" TO	17	2'-9 1/2" TO	3 3/8"	2'-7 3/4" TO	6 3/4"	5"	VARY A & C 3 EACH BY 1 1/2"
			8'-7"		3'-0 1/2"		2'-10 3/4"			H = 3 3/8", R = 2"
EC424	4	21	8'-1"	17	2'-9 1/2"	3 3/8"	2'-7 3/4"	6 3/4"	5"	H = 3 3/8", R = 2"
EC520	5	31	7'-4"	STR						
EC521	5	12	29'-3"	STR						
EC522	5	6	29'-3 1/4"	80	11'-0"	2'-0 1/4"	16'-3"		2'-0"	
EC620	6	8	29'-3"	STR						
EC621	6	4	29'-3 1/4"	80	11'-0"	2'-0 1/4"	16'-3"		2'-0"	
ESS511	5	14	49'-0"	STR						
ESS512	5	32	8'-0"	6	2'-0 1/2"	1'-6"	5 1/2"			
ESS513	5	2	32'-3"	31	1'-1"	30'-1"	1'-1"			
ESS514	5	2	30'-1"	STR						
ESS611	6	2	32'-3"	31	1'-1"	30'-1"	1'-1"			
ESS612	6	2	30'-1"	STR						
ESS811	8	100	4'-6"	STR						

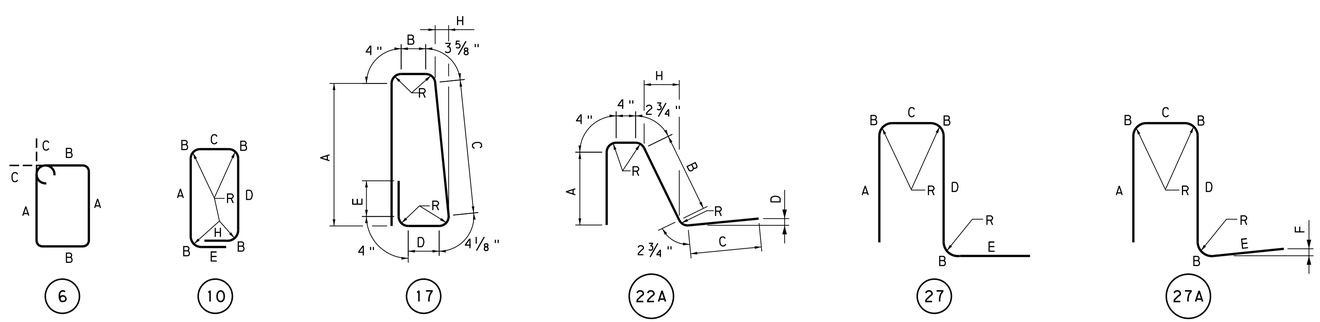

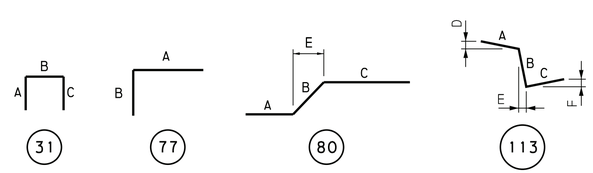

NOTES:

1. "E" PREFIX IN BAR MARK DENOTES EPOXY COATED BARS.
2. ALL DIMENSIONS ARE OUT TO OUT OF BAR EXCEPT "A" & "C" ON STANDARD 135° AND 180° HOOKS, UNLESS NOTED.
3. FOR REINFORCEMENT BAR FABRICATION DETAILS, REFER TO STANDARD DRAWING BC-736M.
4. FIGURES IN CIRCLE REPRESENT BAR TYPES.
5. "J" DIMENSIONS ON 180° HOOKS ARE SHOWN ONLY WHERE NECESSARY TO RESTRICT HOOK SIZE, OTHERWISE STANDARD HOOKS ARE TO BE USED.
6. RADIUS, "R" IS TO THE INSIDE OF THE BAR.
7. REINFORCEMENT BAR SCHEDULE IS FOR INFORMATION ONLY. VERIFY INFORMATION BEFORE FABRICATION.

REFERENCES:	SHEETS:
GENERAL NOTES	4 & 5
APPROACH SLAB DRAWINGS	59 - 65

Mark	Description	By	Chk'd	Recm'd	Date
REVISIONS					

SR 3013 PREVIOUSLY KNOWN AS LR 22075
BMS STR ID: 22-3013-0020-0291 MPMS/ECMS PROJ: 97828 BRKEY: 67416

HNTB

COMMONWEALTH OF PENNSYLVANIA
DEPARTMENT OF TRANSPORTATION

DAUPHIN COUNTY
SR 0083 SECTION 079
SEG 0020 OFFSET 0291
SR 3013 (29TH STREET) STA 37+78.24 OVER
SR 0083 & NORFOLK SOUTHERN RAILWAY COMPANY
3-SPAN CONTINUOUS COMPOSITE PS CONCRETE
PA BULB-TEE BEAM BRIDGE
APPROACH SLAB REBAR SCHEDULE

COMMONWEALTH OF PENNSYLVANIA
REGISTERED PROFESSIONAL
JUSTIN ROBERT MCCARTHY
ENGINEER
PE076998

PREPARED BY:
HNTB CORPORATION
4507 NORTH FRONT STREET
SUITE 300
HARRISBURG, PA 17110

RECOMMENDED 12-6-2022

SHEET 66 OF 93

S-39451

6/23/2022
FILENAME: 63016-s-brB1-bar05.dgn

DES: MCA | DES CKD: JRM | DWG: SMZ | DWG CKD: JRM

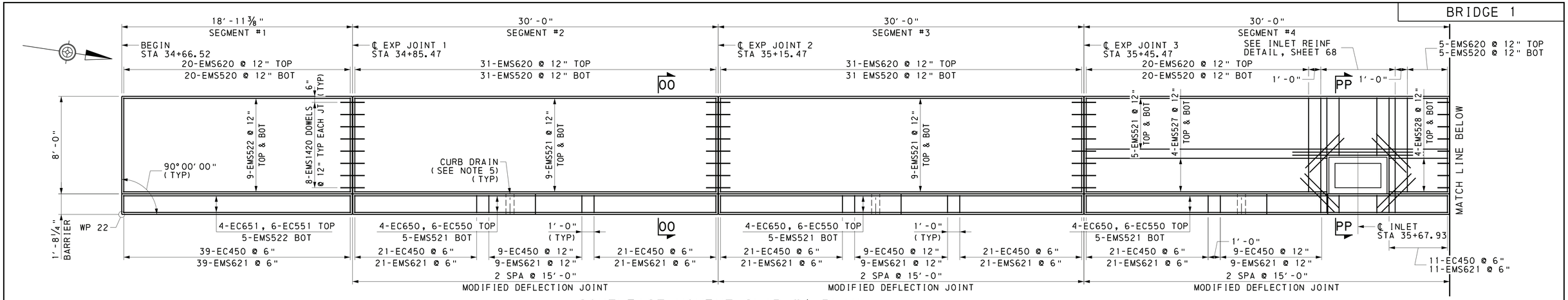

SOUTHEAST MOMENT SLAB #1 PLAN

2 0 2 4 FEET

TOP OF MOMENT SLAB ELEVATIONS			
STATION	L	M	N
34+66.52	381.56	381.95	382.35
34+70.00	381.73	382.12	382.52
34+80.00	382.23	382.63	383.02
34+85.47	382.51	382.91	383.31
34+90.00	382.75	383.15	383.55
35+00.00	383.30	383.69	384.09
35+10.00	383.86	384.26	384.66
35+15.47	384.18	384.57	384.97
35+20.00	384.43	384.83	385.23
35+30.00	385.00	385.40	385.79
35+40.00	385.57	385.97	386.36
35+45.47	385.88	386.28	386.68

TOP OF MOMENT SLAB ELEVATIONS			
STATION	L	M	N
35+50.00	386.14	386.54	386.93
35+60.00	386.71	387.11	387.50
35+70.00	387.28	387.68	388.07
35+75.47	387.59	387.99	388.39
35+80.00	387.85	388.25	388.64
35+90.00	388.42	388.82	389.21
36+00.00	388.99	389.39	389.78
36+05.47	389.30	389.70	390.09
36+10.00	389.56	389.96	390.35
36+20.00	390.13	390.53	390.92
36+30.00	390.70	391.10	391.49
36+35.47	391.01	391.41	391.80

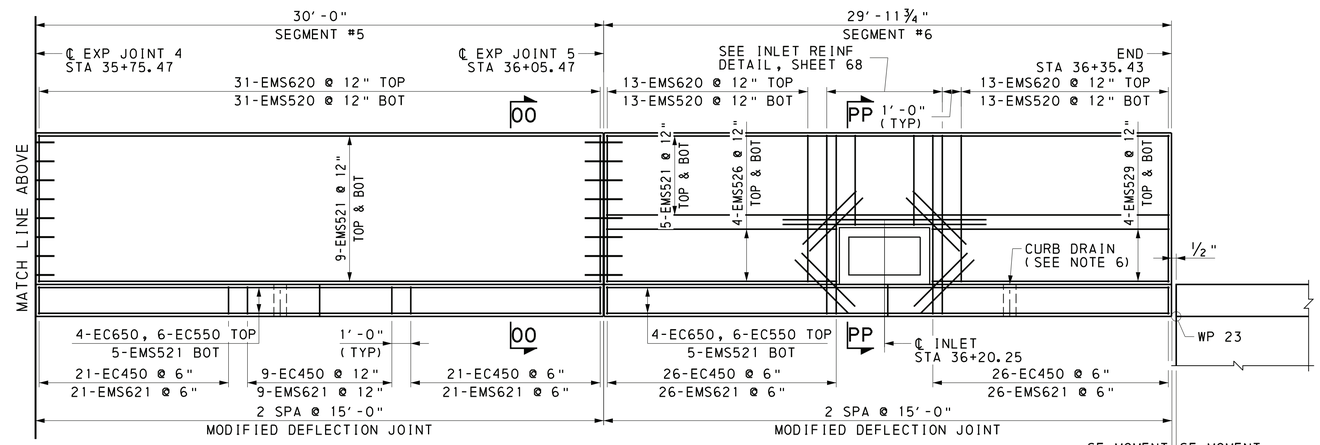

SOUTHEAST MOMENT SLAB #1 PLAN (CONTINUED)

2 0 2 4 FEET

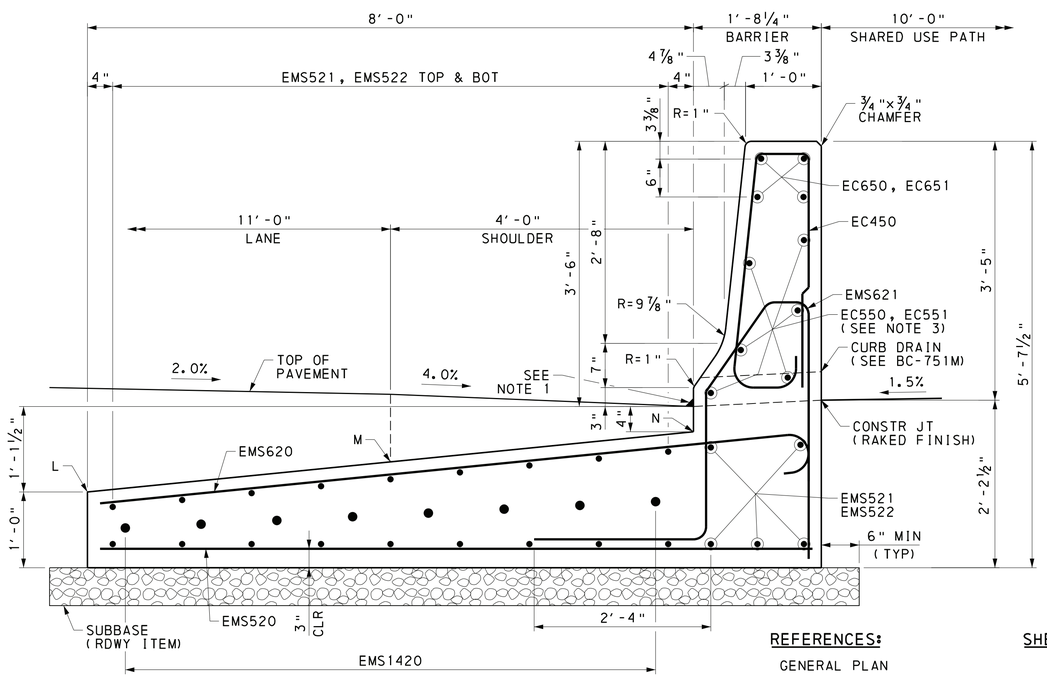

SOUTHEAST MOMENT SLAB #1 SECTION 00-00

6 0 6 12 INCHES

NOTES:

1. ASPHALT RUBBER SEALING COMPOUND (PUB 408, SECTION 705.4(G))
2. PROVIDE 1/2" OPEN JOINT AT EXPANSION JOINT LOCATIONS (SEE BC-752M). FOLLOW TYPE E JOINT PER RC-20M, MODIFIED FOR 1/2" JOINT OPENING.
3. FIELD ADJUST EC550 AND EC551 BARS IN BARRIER AT CURB DRAIN LOCATIONS AS REQUIRED.
4. DO NOT LOCATE EXPANSION JOINTS WITHIN 2'-0" OF THE CENTERLINE OF A JUNCTION BOX.
5. APPROXIMATE CURB DRAIN LOCATION SHOWN. LOCATE CURB DRAINS WITHIN LIMITS WHERE VERTICAL BARS ARE SPACED AT 12". PROVIDE 6" MIN SPACING FROM ℄ OF CURB DRAIN TO MODIFIED DEFLECTION JOINT. PLACE CURB DRAINS AT APPROXIMATELY 30'-0" SPACING. REFER TO BC-752M FOR ADDITIONAL INFORMATION.
6. APPROXIMATE CURB DRAIN LOCATION SHOWN. FIELD ADJUST EMS621 AND EC450 BARRIER BARS AS REQUIRED TO ACCOMMODATE PLACEMENT OF CURB DRAIN.

REFERENCES:	SHEETS:
GENERAL PLAN	1
MOMENT SLAB GENERAL PLANS	2
GENERAL NOTES	4 & 5
STAKE-OUT PLAN	13
MOMENT SLAB DRAWINGS	67 - 78

Mark	Description	By	Chk'd	Recm'd	Date
REVISIONS					

SR 3013 PREVIOUSLY KNOWN AS LR 22075
BMS STR ID: 22-3013-0020-0291 MPMS/ECMS PROJ: 97828 BRKEY: 67416

HNTB

COMMONWEALTH OF PENNSYLVANIA
REGISTERED PROFESSIONAL
JUSTIN ROBERT MCCARTHY
ENGINEER
PE076998

COMMONWEALTH OF PENNSYLVANIA
DEPARTMENT OF TRANSPORTATION

DAUPHIN COUNTY
SR 0083 SECTION 079
SEG 0020 OFFSET 0291
SR 3013 (29TH STREET) STA 37+78.24 OVER
SR 0083 & NORFOLK SOUTHERN RAILWAY COMPANY
3-SPAN CONTINUOUS COMPOSITE PS CONCRETE
PA BULB-TEE BEAM BRIDGE
MOMENT SLAB DETAILS 1

PREPARED BY:
HNTB CORPORATION
4507 NORTH FRONT STREET
SUITE 300
HARRISBURG, PA 17110

RECOMMENDED 12-6-2022

SHEET 67 OF 93

S-39451

6/23/2022
FILENAME: 63016-s-brB1-momO1.dgn

DES: MCA	DES CKD: JDH	DWG: JTM	DWG CKD: CEK

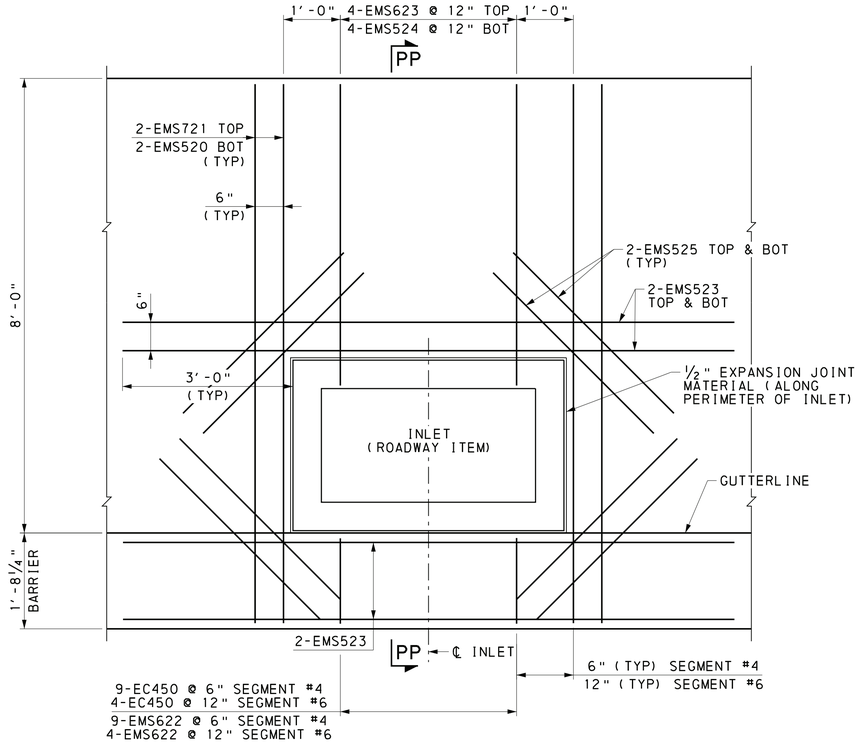

INLET REINFORCEMENT PLAN

12 0 12 INCHES

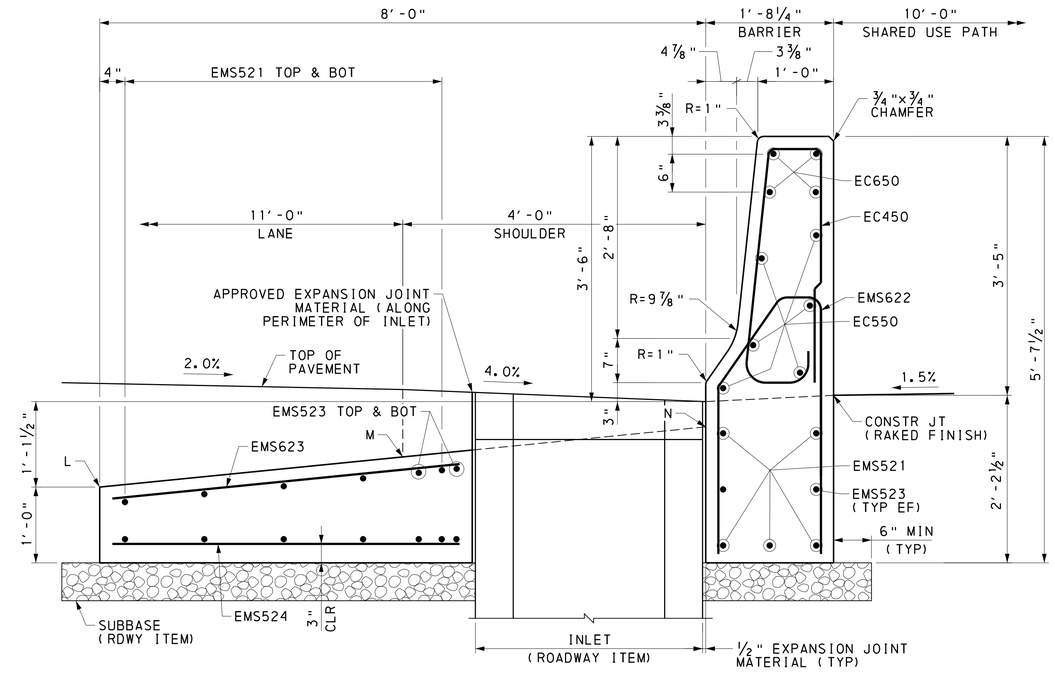

SECTION PP-PP

6 0 6 12 INCHES

Mark	Description	By	Chk'd	Recm'd	Date
REVISIONS					

SR 3013 PREVIOUSLY KNOWN AS LR 22075
BMS STR ID: 22-3013-0020-0291 MPMS/ECMS PROJ: 97828 BRKEY: 67416

HNTB

COMMONWEALTH OF PENNSYLVANIA
DEPARTMENT OF TRANSPORTATION

DAUPHIN COUNTY
SR 0083 SECTION 079
SEG 0020 OFFSET 0291
SR 3013 (29TH STREET) STA 37+78.24 OVER
SR 0083 & NORFOLK SOUTHERN RAILWAY COMPANY
3-SPAN CONTINUOUS COMPOSITE PS CONCRETE
PA BULB-TEE BEAM BRIDGE
MOMENT SLAB DETAILS 2

COMMONWEALTH OF PENNSYLVANIA
REGISTERED PROFESSIONAL
JUSTIN ROBERT MCCARTHY
ENGINEER
PE076998

REFERENCES:	SHEETS:
GENERAL NOTES	4 & 5
STAKE-OUT PLAN	13
MOMENT SLAB DRAWINGS	67 - 78

PREPARED BY:
HNTB CORPORATION
4507 NORTH FRONT STREET
SUITE 300
HARRISBURG, PA 17110

RECOMMENDED 12-6-2022

SHEET 68 OF 93

S-39451

6/23/2022
FILENAME: 63016-s-brB1-mom02.dgn

DES: MCA	DES CKD: JDH	DWG: JTM	DWG CKD: CEK

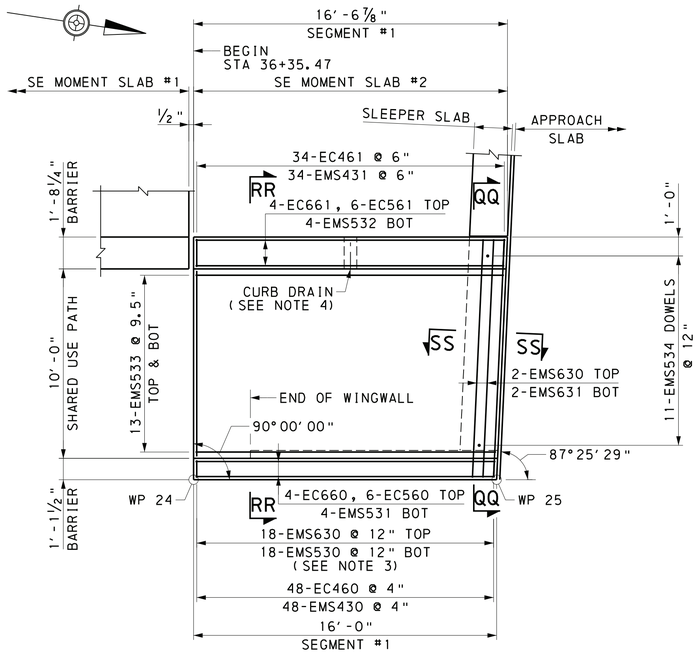

SOUTHEAST MOMENT SLAB #2 PLAN

2 0 2 4 FEET

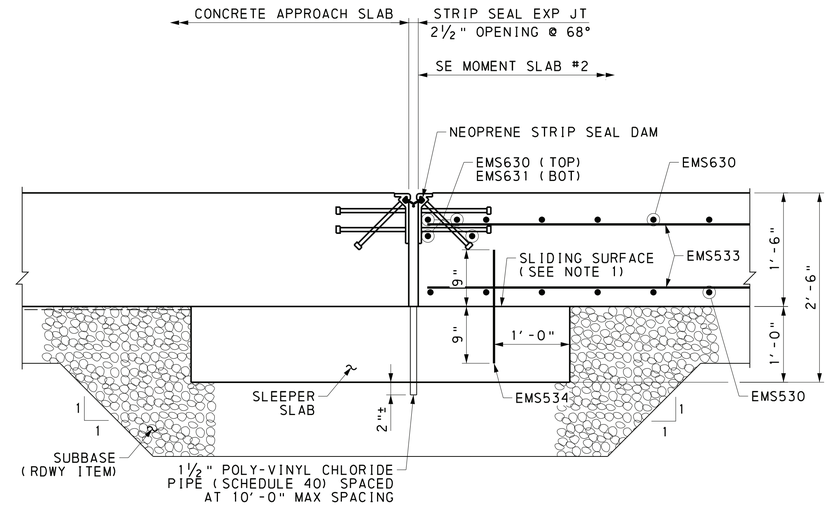

SECTION SS-SS

6 0 6 12 INCHES

(APPROACH SLAB & SLEEPER SLAB REINFORCEMENT NOT SHOWN FOR CLARITY)

TOP OF MOMENT SLAB ELEVATIONS			
STATION	O	P	Q
36+35.47	392.14	392.22	392.37
36+40.00	392.40	392.48	392.63
36+50.00	392.97	393.05	393.20
36+51.52	393.05	393.14	393.29
36+51.97	393.08	393.16	-
36+52.04	393.08	-	-

NOTES:

1. TROWEL SMOOTH AND PLACE 2 LAYERS OF 4 MIL POLYETHYLENE SHEETING AS BOND BREAKER.
2. FIELD ADJUST EC561 BARS IN BARRIER AT CURB DRAIN LOCATIONS AS REQUIRED.
3. PROVIDE ONE ADDITIONAL EC460 BAR ON EACH SIDE OF LIGHTING BLOCKOUT (LAP WITH EMS430). ADJUST REINFORCEMENT AS REQUIRED TO ACCOMMODATE PLACEMENT OF JUNCTION BOXES AND LIGHTING BLOCKOUTS. SEE HIGHWAY LIGHTING ALSO PLAN FOR PLACEMENT OF JUNCTION BOXES AND LUMINAIRES.
4. APPROXIMATE CURB DRAIN LOCATION SHOWN. FIELD ADJUST EMS431 AND EC461 BARRIER BARS AS REQUIRED TO ACCOMMODATE PLACEMENT OF CURB DRAIN.

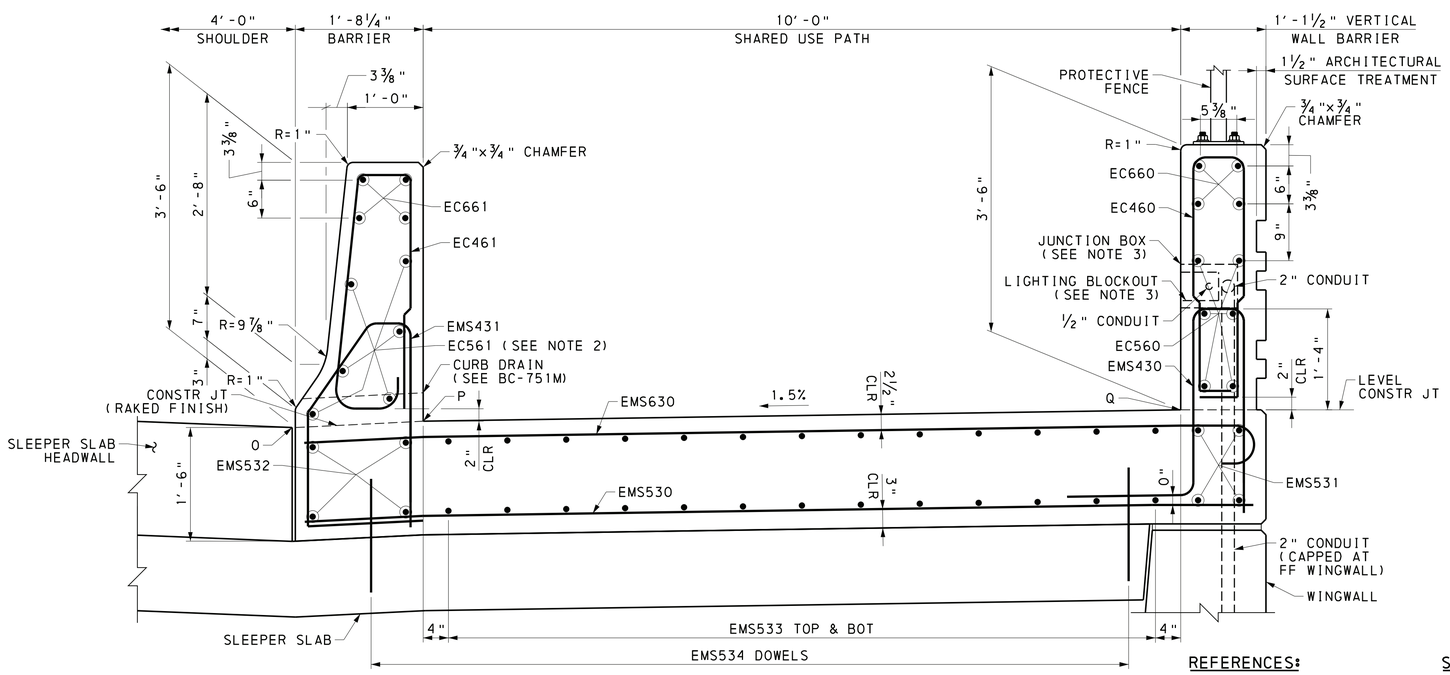

SOUTHEAST MOMENT SLAB #2 SECTION QQ-QQ & RR-RR

6 0 6 12 INCHES

(SECTION QQ-QQ SHOWN, SECTION RR-RR IS WITHOUT SLEEPER SLAB)

REFERENCES:	SHEETS:
GENERAL PLAN	1
MOMENT SLAB GENERAL PLANS	2
GENERAL NOTES	4 & 5
STAKE-OUT PLAN	13
MOMENT SLAB DRAWINGS	67 - 78

Mark	Description	By	Chk'd	Recm'd	Date
REVISIONS					

SR 3013 PREVIOUSLY KNOWN AS LR 22075
BMS STR ID: 22-3013-0020-0291 MPMS/ECMS PROJ: 97828 BRKEY: 67416

HNTB

COMMONWEALTH OF PENNSYLVANIA
REGISTERED PROFESSIONAL
JUSTIN ROBERT MCCARTHY
ENGINEER
PE076998

PREPARED BY:
HNTB CORPORATION
4507 NORTH FRONT STREET
SUITE 300
HARRISBURG, PA 17110

COMMONWEALTH OF PENNSYLVANIA
DEPARTMENT OF TRANSPORTATION

DAUPHIN COUNTY
SR 0083 SECTION 079
SEG 0020 OFFSET 0291
SR 3013 (29TH STREET) STA 37+78.24 OVER
SR 0083 & NORFOLK SOUTHERN RAILWAY COMPANY

3-SPAN CONTINUOUS COMPOSITE PS CONCRETE
PA BULB-TEE BEAM BRIDGE

MOMENT SLAB DETAILS 3

RECOMMENDED 12-6-2022

SHEET 69 OF 93

S-39451

6/21/2022
FILENAME: 63016-s-br01-mom03.dgn

DES: MCA	DES CKD: JDH	DWG: JTM	DWG CKD: CEK

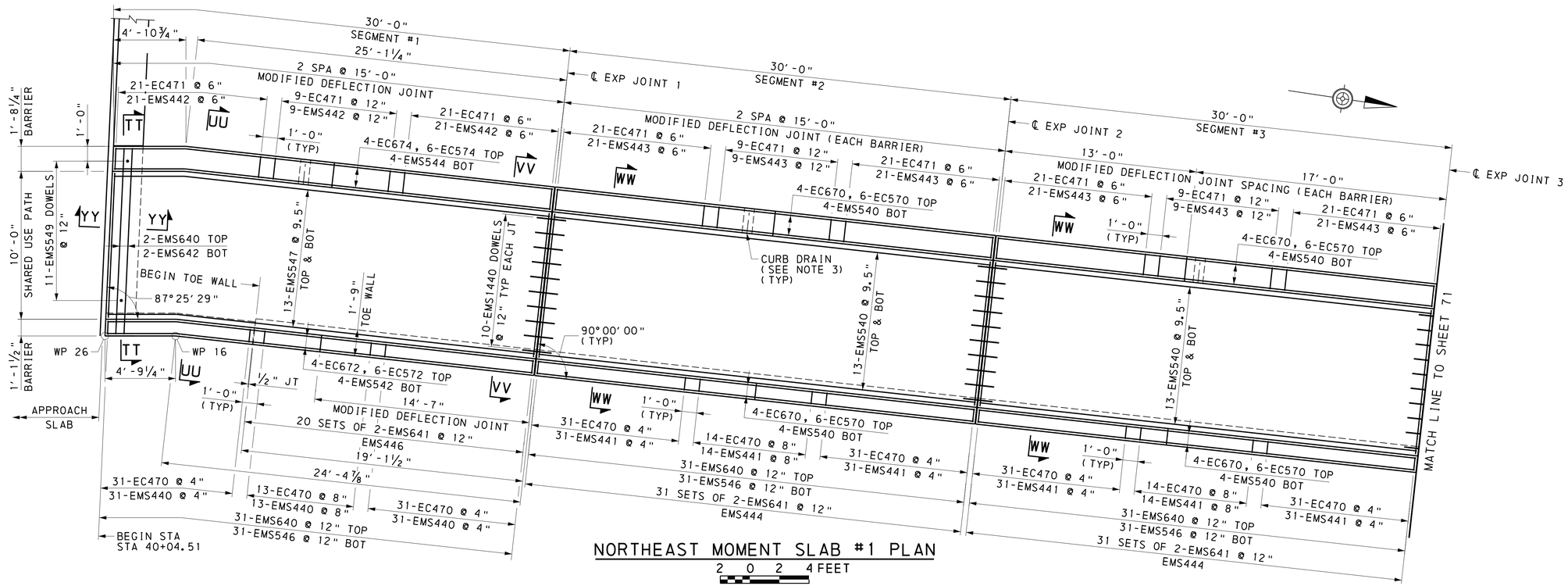

NORTHEAST MOMENT SLAB #1 PLAN

2 0 2 4 FEET

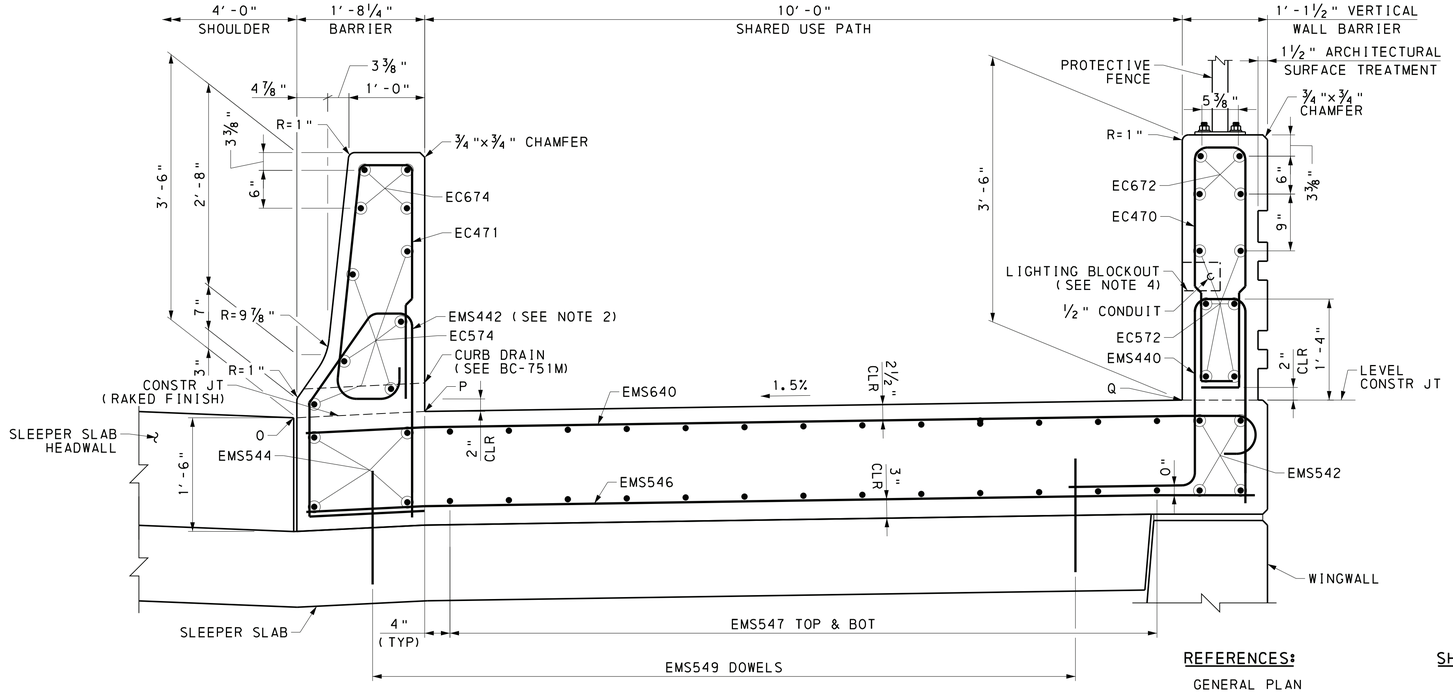

NORTHEAST MOMENT SLAB SECTION TT-TT & UU-UU

6 0 6 12 INCHES

(SECTION TT-TT SHOWN, SECTION UU-UU IS WITHOUT SLEEPER SLAB)

NOTES:

1. PROVIDE ½" OPEN JOINT AT EXPANSION JOINT LOCATIONS. FOLLOW TYPE E JOINT PER RC-20M, MODIFIED FOR ½" JOINT OPENING.
2. FIELD ADJUST EC574 BARS IN BARRIER AT CURB DRAIN LOCATIONS AS REQUIRED.
3. APPROXIMATE CURB DRAIN LOCATION SHOWN. LOCATE CURB DRAINS WITHIN LIMITS WHERE VERTICAL BARS ARE SPACED AT 12". PROVIDE 6" MIN SPACING FROM ℄ OF CURB DRAIN TO MODIFIED DEFLECTION JOINT. PLACE CURB DRAINS AT APPROXIMATELY 30'-0" SPACING. REFER TO BC-752M FOR ADDITIONAL INFORMATION.
4. PROVIDE ONE ADDITIONAL EC470 BAR ON EACH SIDE OF LIGHTING BLOCKOUT (LAP WITH EMS440). ADJUST REINFORCEMENT AS REQUIRED TO ACCOMMODATE PLACEMENT OF JUNCTION BOXES AND LIGHTING BLOCKOUTS. SEE HIGHWAY LIGHTING ALSO PLAN FOR PLACEMENT OF JUNCTION BOXES AND LUMINAIRES.

Mark	Description	By	Chk'd	Recm'd	Date
REVISIONS					

SR 3013 PREVIOUSLY KNOWN AS LR 22075
BMS STR ID: 22-3013-0020-0291 MPMS/ECMS PROJ: 97828 BRKEY: 67416

REFERENCES:	SHEETS:
GENERAL PLAN	1
MOMENT SLAB GENERAL PLANS	2
GENERAL NOTES	4 & 5
STAKE-OUT PLAN	13
MOMENT SLAB DRAWINGS	67 - 78

HNTB

COMMONWEALTH OF PENNSYLVANIA REGISTERED PROFESSIONAL ENGINEER JUSTIN ROBERT MCCARTHY PE076998

PREPARED BY:
HNTB CORPORATION
4507 NORTH FRONT STREET
SUITE 300
HARRISBURG, PA 17110

COMMONWEALTH OF PENNSYLVANIA
DEPARTMENT OF TRANSPORTATION

DAUPHIN COUNTY
SR 0083 SECTION 079
SEG 0020 OFFSET 0291
SR 3013 (29TH STREET) STA 37+78.24 OVER
SR 0083 & NORFOLK SOUTHERN RAILWAY COMPANY

3-SPAN CONTINUOUS COMPOSITE PS CONCRETE
PA BULB-TEE BEAM BRIDGE
MOMENT SLAB DETAILS 4

RECOMMENDED 12-6-2022

SHEET 70 OF 93

S-39451

6/23/2022
FILENAME 63016-s-brB1-mom04.dgn

DES: MCA	DES CKD: JDH	DWG: JTM	DWG CKD: CEK

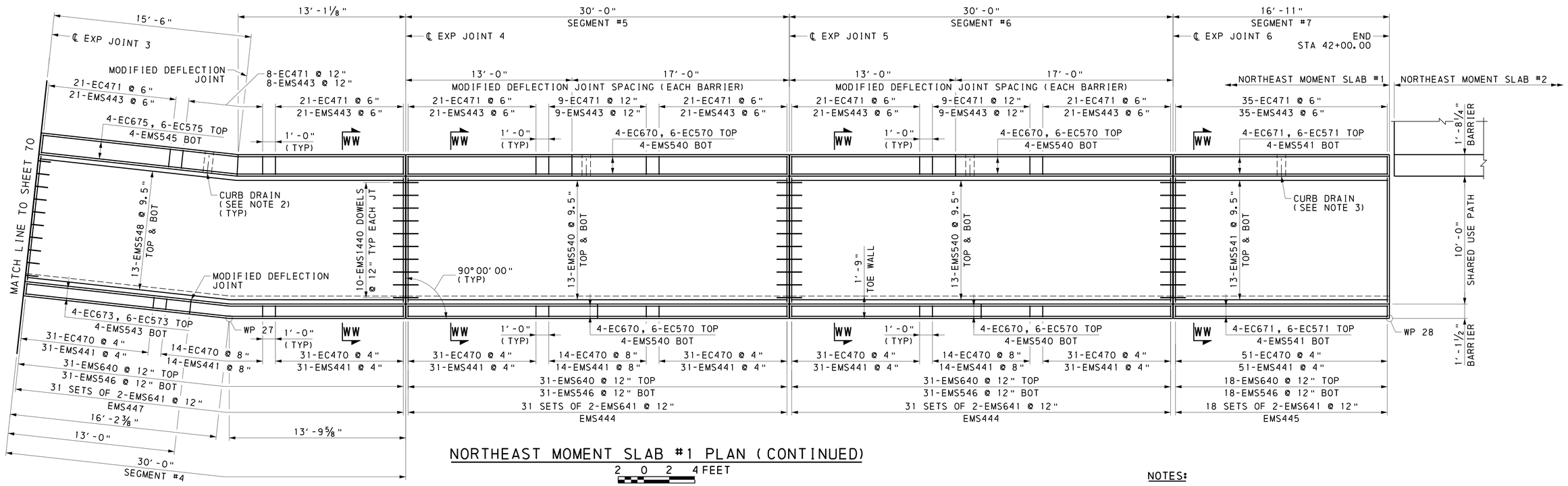

NORTHEAST MOMENT SLAB #1 PLAN (CONTINUED)

2 0 2 4 FEET

NOTES:

1. PROVIDE 1/2" OPEN JOINT AT EXPANSION JOINT LOCATIONS. FOLLOW TYPE E JOINT PER RC-20M, MODIFIED FOR 1/2" JOINT OPENING.
2. APPROXIMATE CURB DRAIN LOCATION SHOWN. LOCATE CURB DRAINS WITHIN LIMITS WHERE VERTICAL BARS ARE SPACED AT 12". PROVIDE 6" MIN SPACING FROM ℄ OF CURB DRAIN TO MODIFIED DEFLECTION JOINT. PLACE CURB DRAINS AT APPROXIMATELY 30'-0" SPACING. REFER TO BC-752M FOR ADDITIONAL INFORMATION.
3. APPROXIMATE CURB DRAIN LOCATION SHOWN. FIELD ADJUST EMS443 AND EC471 BARRIER BARS AS REQUIRED TO ACCOMMODATE PLACEMENT OF CURB DRAIN.

Mark	Description	By	Chk'd	Recm'd	Date
REVISIONS					

SR 3013 PREVIOUSLY KNOWN AS LR 22075
BMS STR ID: 22-3013-0020-0291 MPMS/ECMS PROJ: 97828 BRKEY: 67416

REFERENCES:	SHEETS:
GENERAL PLAN	1
MOMENT SLAB GENERAL PLANS	2
GENERAL NOTES	4 & 5
STAKE-OUT PLAN	13
MOMENT SLAB DRAWINGS	67 - 78

HNTB

COMMONWEALTH OF PENNSYLVANIA
REGISTERED PROFESSIONAL
JUSTIN ROBERT MCCARTHY
ENGINEER
PE076998

PREPARED BY:
HNTB CORPORATION
4507 NORTH FRONT STREET
SUITE 300
HARRISBURG, PA 17110

COMMONWEALTH OF PENNSYLVANIA
DEPARTMENT OF TRANSPORTATION

DAUPHIN COUNTY
SR 0083 SECTION 079
SEG 0020 OFFSET 0291
SR 3013 (29TH STREET) STA 37+78.24 OVER
SR 0083 & NORFOLK SOUTHERN RAILWAY COMPANY
3-SPAN CONTINUOUS COMPOSITE PS CONCRETE
PA BULB-TEE BEAM BRIDGE
MOMENT SLAB DETAILS 5

RECOMMENDED 12-6-2022

S-39451

6/21/2022
FILENAME: 63016-s-br81-mom05.dgn

DES: MCA	DES CKD: JDH	DWG: JTM	DWG CKD: CEK

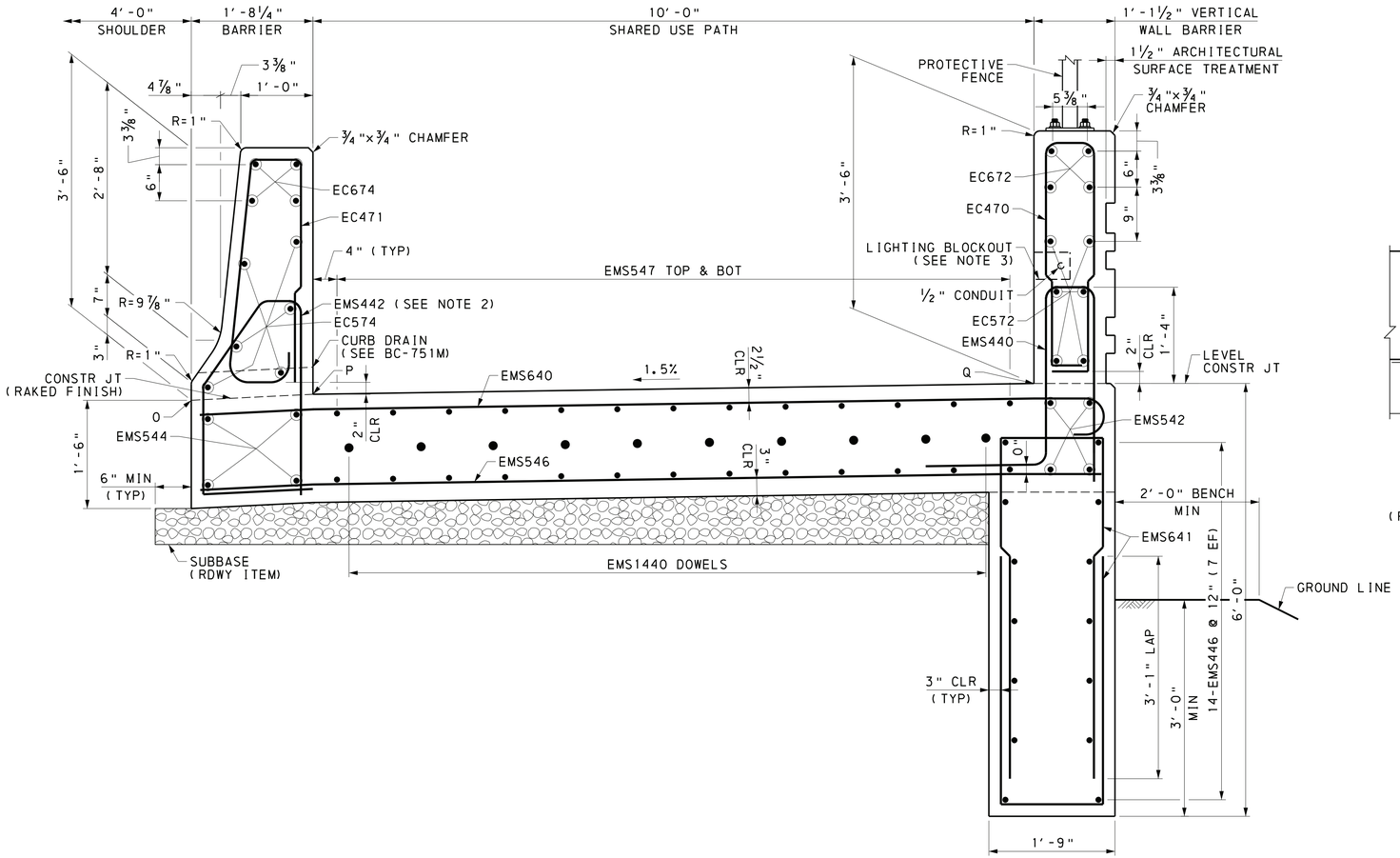

NORTHEAST MOMENT SLAB SECTION VV-VV

6 0 6 12 INCHES

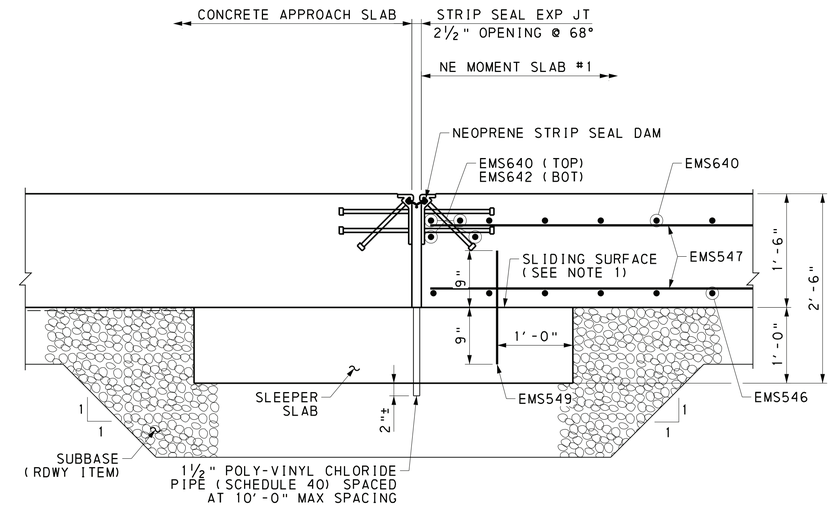

SECTION YY-YY

6 0 6 12 INCHES

(APPROACH SLAB & SLEEPER SLAB REINFORCEMENT NOT SHOWN FOR CLARITY)

NOTES:

1. TROWEL SMOOTH AND PLACE 2 LAYERS OF 4 MIL. POLYETHELYNE SHEETING AS BOND BREAKER.
2. FIELD ADJUST EC574 BARS IN BARRIER AT CURB DRAIN LOCATIONS AS REQUIRED.
3. PROVIDE ONE ADDITIONAL EC470 BAR ON EACH SIDE OF LIGHTING BLOCKOUT (LAP WITH EMS440). ADJUST REINFORCEMENT AS REQUIRED TO ACCOMMODATE PLACEMENT OF JUNCTION BOXES AND LIGHTING BLOCKOUTS. SEE HIGHWAY LIGHTING ALSO PLAN FOR PLACEMENT OF JUNCTION BOXES AND LUMINAIRES.

Mark	Description	By	Chk'd	Recm'd	Date
REVISIONS					

SR 3013 PREVIOUSLY KNOWN AS LR 22075
BMS STR ID: 22-3013-0020-0291 MPMS/ECMS PROJ: 97828 BRKEY: 67416

REFERENCES:

	SHEETS:
GENERAL PLAN	1
MOMENT SLAB GENERAL PLANS	2
GENERAL NOTES	4 & 5
STAKE-OUT PLAN	13
MOMENT SLAB DRAWINGS	67 - 78

HNTB

COMMONWEALTH OF PENNSYLVANIA
REGISTERED PROFESSIONAL
JUSTIN ROBERT MCCARTHY
ENGINEER
PE076998

PREPARED BY:
HNTB CORPORATION
4507 NORTH FRONT STREET
SUITE 300
HARRISBURG, PA 17110

COMMONWEALTH OF PENNSYLVANIA
DEPARTMENT OF TRANSPORTATION

DAUPHIN COUNTY
SR 0083 SECTION 079
SEG 0020 OFFSET 0291
SR 3013 (29TH STREET) STA 37+78.24 OVER
SR 0083 & NORFOLK SOUTHERN RAILWAY COMPANY
3-SPAN CONTINUOUS COMPOSITE PS CONCRETE
PA BULB-TEE BEAM BRIDGE
MOMENT SLAB DETAILS 6

RECOMMENDED 12-6-2022

SHEET 72 OF 93

S-39451

6/23/2022
FILENAME: 63016-s-brB1-mom06.dgn

DES: MCA	DES CKD: JDH	DWG: JTM	DWG CKD: CEK

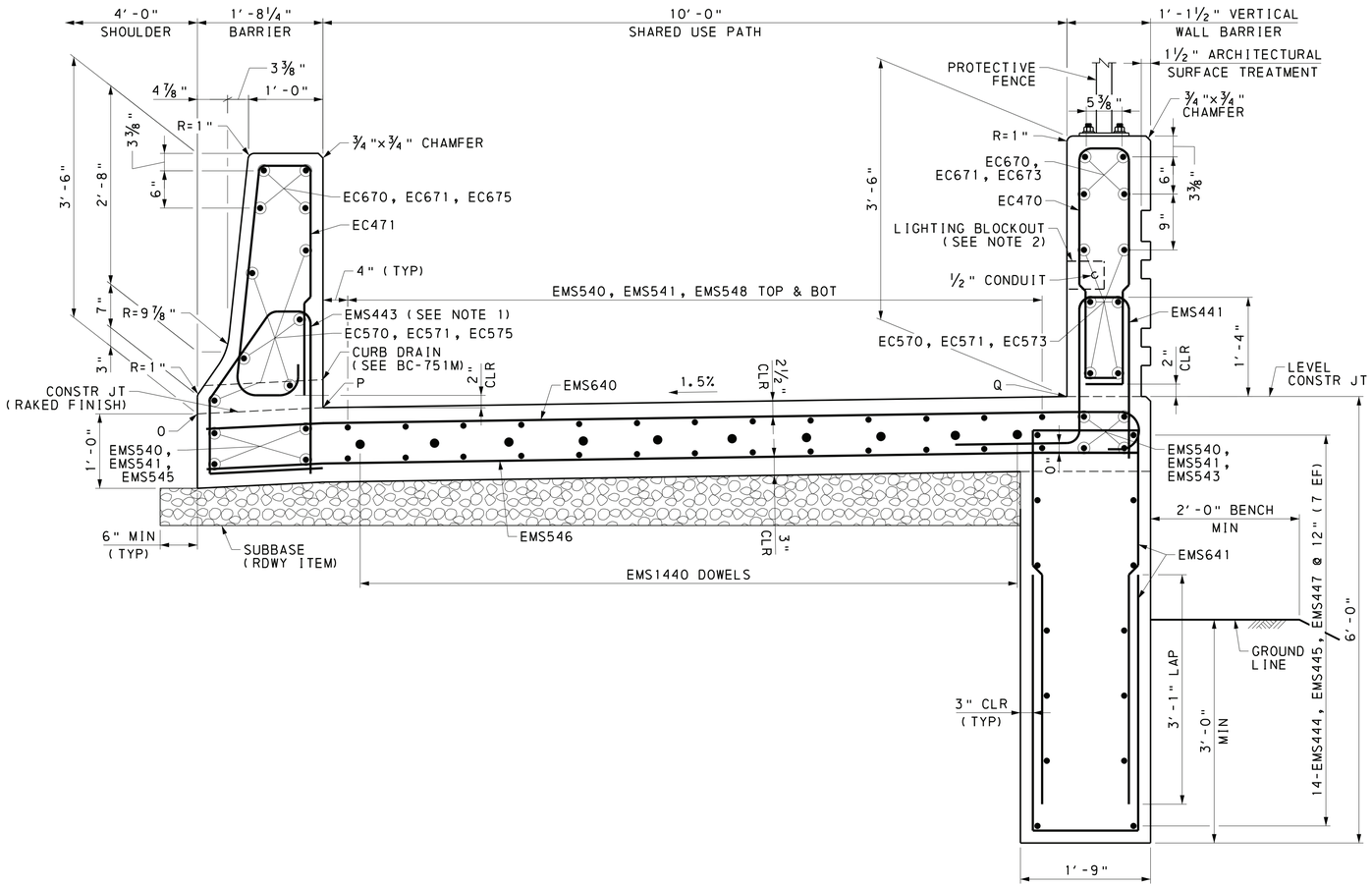

NORTHEAST MOMENT SLAB SECTION WW-WW

6 0 6 12 INCHES

TOP OF MOMENT SLAB ELEVATIONS			
STATION	O	P	Q
40+04.56	-	-	401.82
40+05.01	-	401.65	401.80
40+05.09	401.56	401.65	401.80
40+10.00	401.31	401.39	401.54
40+20.00	400.76	400.85	401.00
40+30.00	400.22	400.30	400.46
40+33.66	400.02	400.11	400.26
40+34.75	399.96	400.05	400.20
40+34.94	399.95	400.04	400.19
40+40.00	399.68	399.76	399.91
40+50.00	399.13	399.22	399.37
40+60.00	398.59	398.68	398.83
40+63.48	398.40	398.49	398.64
40+64.57	398.34	398.43	398.58
40+64.76	398.33	398.42	398.57
40+70.00	398.05	398.13	398.28
40+80.00	397.51	397.59	397.74
40+90.00	396.96	397.05	397.20
40+93.30	396.78	396.87	397.02
40+94.39	396.72	396.81	396.96
40+94.58	396.71	396.80	396.95
41+00.00	396.42	396.50	396.66
41+10.00	395.88	395.96	396.11
41+20.00	395.36	395.44	395.59
41+23.08	395.20	395.28	395.43
41+30.00	394.84	394.92	395.07
41+40.00	394.32	394.40	394.55
41+50.00	393.80	393.88	394.03
41+53.08	393.64	393.72	393.87
41+60.00	393.28	393.36	393.51
41+70.00	392.75	392.84	392.99
41+80.00	392.23	392.32	392.47
41+83.08	392.07	392.16	392.31
41+90.00	391.71	391.80	391.95
42+00.00	391.22	391.30	391.45

NOTES:

1. FIELD ADJUST EC570, EC571, AND EC575 BARS IN BARRIER AT CURB DRAIN LOCATIONS AS REQUIRED.
2. PROVIDE ONE ADDITIONAL EC470 BAR ON EACH SIDE OF LIGHTING BLOCKOUT (LAP WITH EMS441). ADJUST REINFORCEMENT AS REQUIRED TO ACCOMMODATE PLACEMENT OF JUNCTION BOXES AND LIGHTING BLOCKOUTS. SEE HIGHWAY LIGHTING ALSO PLAN FOR PLACEMENT OF JUNCTION BOXES AND LUMINAIRES.

Mark	Description	By	Chk'd	Recm'd	Date
REVISIONS					

SR 3013 PREVIOUSLY KNOWN AS LR 22075
BMS STR ID: 22-3013-0020-0291 MPMS/ECMS PROJ: 97828 BRKEY: 67416

HNTB

COMMONWEALTH OF PENNSYLVANIA
DEPARTMENT OF TRANSPORTATION

COMMONWEALTH OF PENNSYLVANIA REGISTERED PROFESSIONAL JUSTIN ROBERT MCCARTHY ENGINEER PE076998

DAUPHIN COUNTY
SR 0083 SECTION 079
SEG 0020 OFFSET 0291
SR 3013 (29TH STREET) STA 37+78.24 OVER
SR 0083 & NORFOLK SOUTHERN RAILWAY COMPANY
3-SPAN CONTINUOUS COMPOSITE PS CONCRETE
PA BULB-TEE BEAM BRIDGE
MOMENT SLAB DETAILS 7

PREPARED BY:
HNTB CORPORATION
4507 NORTH FRONT STREET
SUITE 300
HARRISBURG, PA 17110

RECOMMENDED 12-6-2022

SHEET 73 OF 93

S-39451

REFERENCES: SHEETS:

GENERAL PLAN	1
MOMENT SLAB GENERAL PLANS	2
GENERAL NOTES	4 & 5
STAKE-OUT PLAN	13
MOMENT SLAB DRAWINGS	67 - 78

6/23/2022
FILENAME: 63016-s-brB1-mom07.dgn

DES: MCA | DES CKD: JDH | DWG: JTM | DWG CKD: CEK

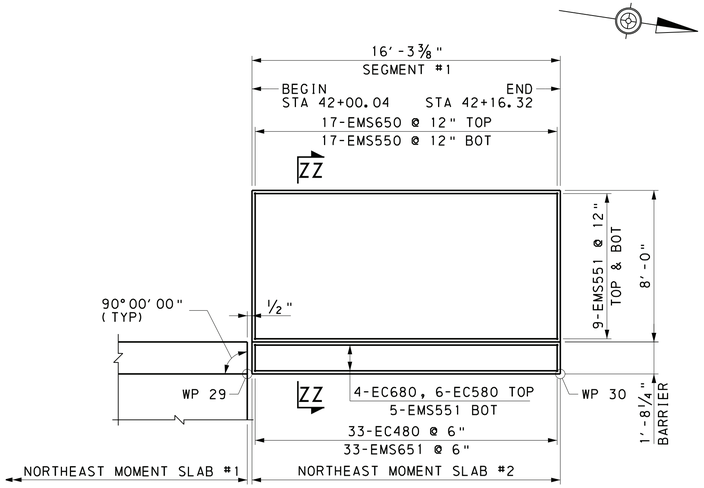

NORTHEAST MOMENT SLAB #2 PLAN

2 0 2 4 FEET

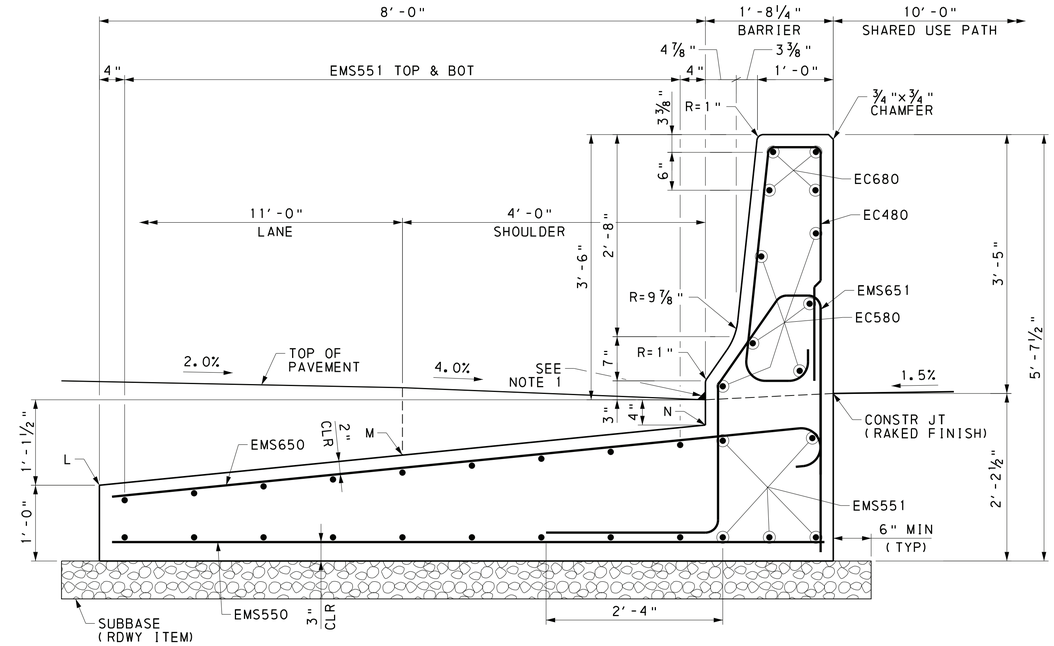

NORTHEAST MOMENT SLAB #2 SECTION ZZ-ZZ

6 0 6 12 INCHES

TOP OF MOMENT SLAB ELEVATIONS			
STATION	L	M	N
42+00.00	390.31	390.71	391.11
42+10.00	389.88	390.27	390.67
42+16.32	389.63	390.02	390.42

NOTES:

1. ASPHALT RUBBER SEALING COMPOUND (PUB 408, SECTION 705.4(G))

Mark	Description	By	Chk'd	Recm'd	Date
REVISIONS					

SR 3013 PREVIOUSLY KNOWN AS LR 22075
BMS STR ID: 22-3013-0020-0291 MPMS/ECMS PROJ: 97828 BRKEY: 67416

HNTB

COMMONWEALTH OF PENNSYLVANIA
DEPARTMENT OF TRANSPORTATION

DAUPHIN COUNTY
SR 0083 SECTION 079
SEG 0020 OFFSET 0291
SR 3013 (29TH STREET) STA 37+78.24 OVER
SR 0083 & NORFOLK SOUTHERN RAILWAY COMPANY
3-SPAN CONTINUOUS COMPOSITE PS CONCRETE
PA BULB-TEE BEAM BRIDGE
MOMENT SLAB DETAILS 8

COMMONWEALTH OF PENNSYLVANIA
REGISTERED PROFESSIONAL
JUSTIN ROBERT MCCARTHY
ENGINEER
PE076998

PREPARED BY:
HNTB CORPORATION
4507 NORTH FRONT STREET
SUITE 300
HARRISBURG, PA 17110

RECOMMENDED 12-6-2022

SHEET 74 OF 93

S-39451

REFERENCES:	SHEETS:
GENERAL PLAN	1
MOMENT SLAB GENERAL PLANS	2
GENERAL NOTES	4 & 5
STAKE-OUT PLAN	13
MOMENT SLAB DRAWINGS	67 - 78

6/23/2022
FILENAME: 63016-s-brB1-mom08.dgn

DES: MCA	DES CKD: JDH	DWG: JTM	DWG CKD: CEK

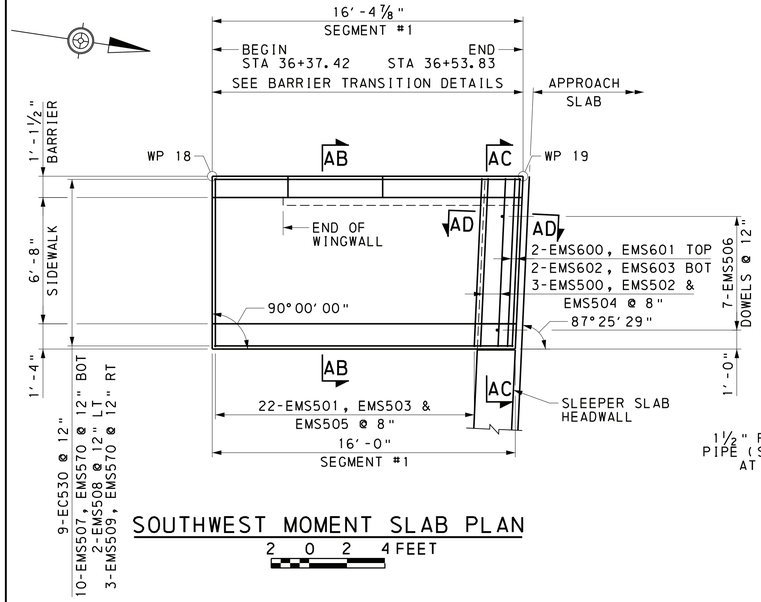

SOUTHWEST MOMENT SLAB PLAN

2 0 2 4 FEET

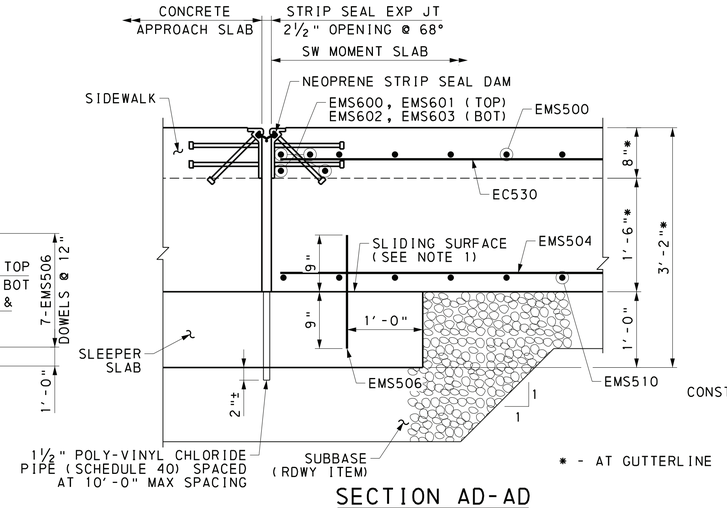

SECTION AD-AD

6 0 6 12 INCHES

(APPROACH SLAB & SLEEPER SLAB REINFORCEMENT NOT SHOWN FOR CLARITY)

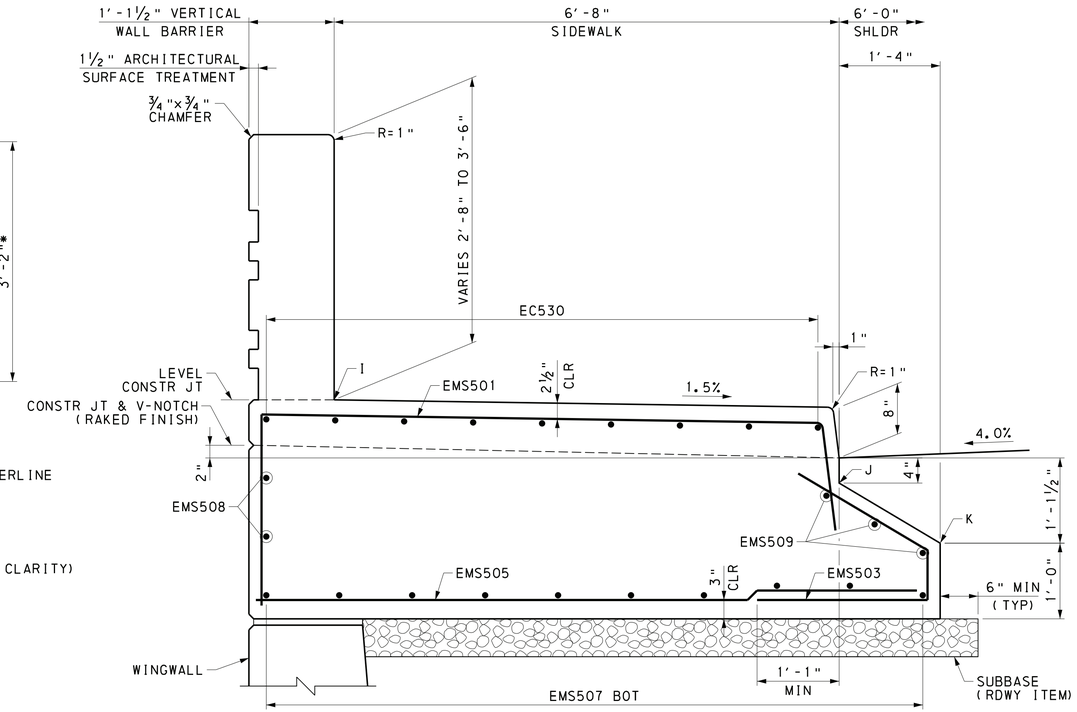

SOUTHWEST MOMENT SLAB SECTION AB-AB (BURIED)

6 0 6 12 INCHES

(BARRIER REINFORCEMENT NOT SHOWN FOR CLARITY)

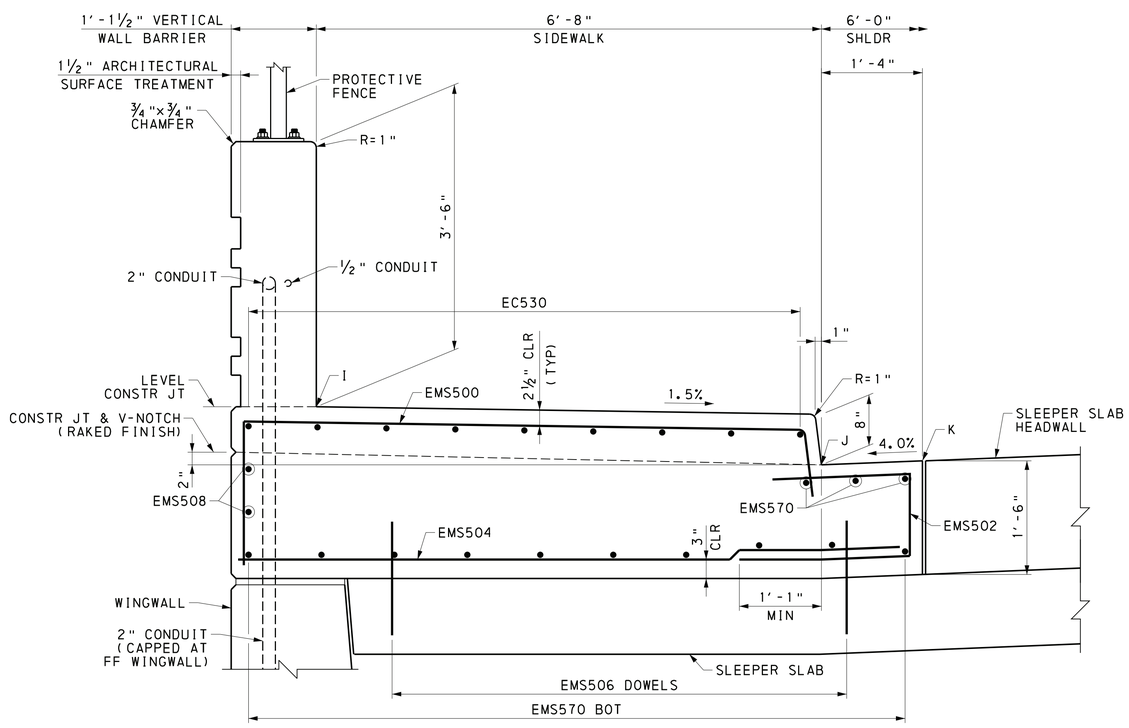

SOUTHWEST MOMENT SLAB SECTION AC-AC (AT GRADE)

6 0 6 12 INCHES

(BARRIER REINFORCEMENT NOT SHOWN FOR CLARITY)

TOP OF MOMENT SLAB ELEVATIONS			
STATION	I	J	K
36+37.42	392.93	391.84**	391.04**
36+40.00	393.08	391.98**	391.19**
36+50.00	393.65	392.55**	391.76**
36+51.42	393.73	392.63**	391.84**
36+51.42	393.73	392.97*	393.02*
36+51.48	393.74	392.64**	391.85**
36+51.48	393.74	392.97*	393.02*
36+51.78	393.75	392.65**	391.86**
36+51.78	393.75	392.99*	393.04*
36+53.42	393.85	393.08*	393.13*
36+53.48	393.85	393.08*	-
36+53.78	393.87	-	-

* "AT GRADE" ELEVATION
** "BURIED" ELEVATION

NOTES:

1. TROWEL SMOOTH AND PLACE 2 LAYERS OF 4 MIL. POLYETHELYNE SHEETING AS BOND BREAKER.
2. DO NOT LOCATE EXPANSION JOINTS WITHIN 2'-0" OF THE CENTERLINE OF A JUNCTION BOX.

REFERENCES:	SHEETS:
GENERAL PLAN	1
MOMENT SLAB GENERAL PLANS	2
GENERAL NOTES	4 & 5
STAKE-OUT PLAN	13
MOMENT SLAB DRAWINGS	67 - 78

Mark	Description	By	Chk'd	Recm'd	Date
REVISIONS					

SR 3013 PREVIOUSLY KNOWN AS LR 22075
BMS STR ID: 22-3013-0020-0291 MPMS/ECMS PROJ: 97828 BRKEY: 67416

HNTB

COMMONWEALTH OF PENNSYLVANIA
REGISTERED PROFESSIONAL
JUSTIN ROBERT MCCARTHY
ENGINEER
PE076998

PREPARED BY:
HNTB CORPORATION
4507 NORTH FRONT STREET
SUITE 300
HARRISBURG, PA 17110

COMMONWEALTH OF PENNSYLVANIA
DEPARTMENT OF TRANSPORTATION

DAUPHIN COUNTY
SR 0083 SECTION 079
SEG 0020 OFFSET 0291
SR 3013 (29TH STREET) STA 37+78.24 OVER
SR 0083 & NORFOLK SOUTHERN RAILWAY COMPANY
3-SPAN CONTINUOUS COMPOSITE PS CONCRETE
PA BULB-TEE BEAM BRIDGE
MOMENT SLAB DETAILS 9

RECOMMENDED 12-6-2022

SHEET 75 OF 93

S-39451

6/23/2022
FILENAME: 63016-s-brB1-mom09.dgn

DES: MCA	DES CKD: JDH	DWG: JTM	DWG CKD: CEK

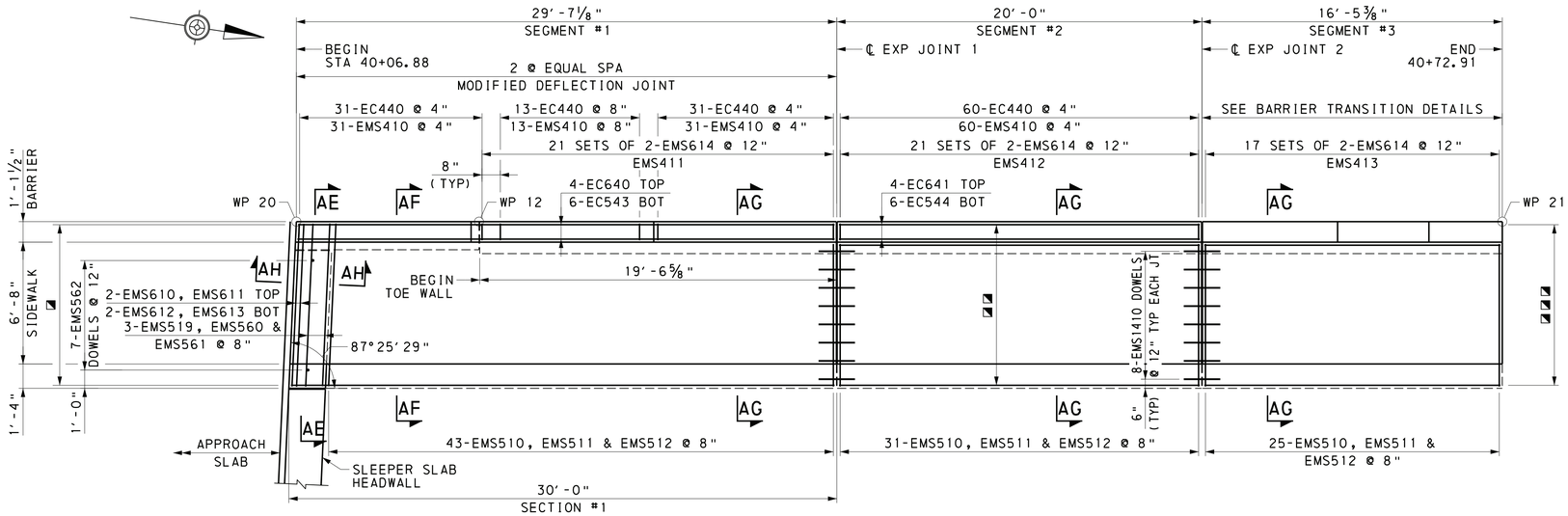

NORTHWEST MOMENT SLAB PLAN

2 0 2 4 FEET

LEGEND

◪ 9-EC540 @ 12"
10-EMS515, EMS518 @ 12" BOT
2-EMS516 @ 12" LT
3-EMS517, EMS518 @ 12" RT

◪◪ 9-EC541 @ 12"
10-EMS513 @ 12" BOT
2-EMS513 @ 12" LT
3-EMS513 @ 12" RT

◪◪◪ 9-EC542 @ 12"
10-EMS514 @ 12" BOT
2-EMS514 @ 12" LT
3-EMS514 @ 12" RT

TOP OF MOMENT SLAB ELEVATIONS			
STATION	I	J	K
40+06.47	---	---	401.47*
40+06.53	---	401.41*	401.46*
40+06.83	402.16	401.39*	401.45*
40+08.47	402.07	401.31*	401.36*
40+08.47	402.07	400.97**	400.18**
40+08.53	402.07	401.30*	401.36*
40+08.53	402.07	400.97**	400.18**
40+08.83	402.05	401.29*	401.34*
40+08.83	402.05	400.96**	400.16**
40+10.00	401.99	400.89**	400.10**
40+20.00	401.47	400.37**	399.58**
40+30.00	400.95	399.85**	399.06**
40+36.47	400.61	399.52**	398.72**
40+40.00	400.43	399.33**	398.54**
40+50.00	399.91	398.81**	398.02**
40+56.47	399.57	398.47**	397.68**
40+60.00	399.39	398.29**	397.50**
40+70.00	398.87	397.77**	396.98**
40+72.91	398.72	397.62**	396.83**

* "AT GRADE" ELEVATION
** "BURIED" ELEVATION

NOTES:

1. PROVIDE ONE ADDITIONAL EC440 BAR ON EACH SIDE OF LIGHTING BLOCKOUT (LAP WITH EMS410). ADJUST REINFORCEMENT AS REQUIRED TO ACCOMMODATE PLACEMENT OF JUNCTION BOXES AND LIGHTING BLOCKOUTS. SEE HIGHWAY LIGHTING ALSO PLAN FOR PLACEMENT OF JUNCTION BOXES AND LUMINAIRES.

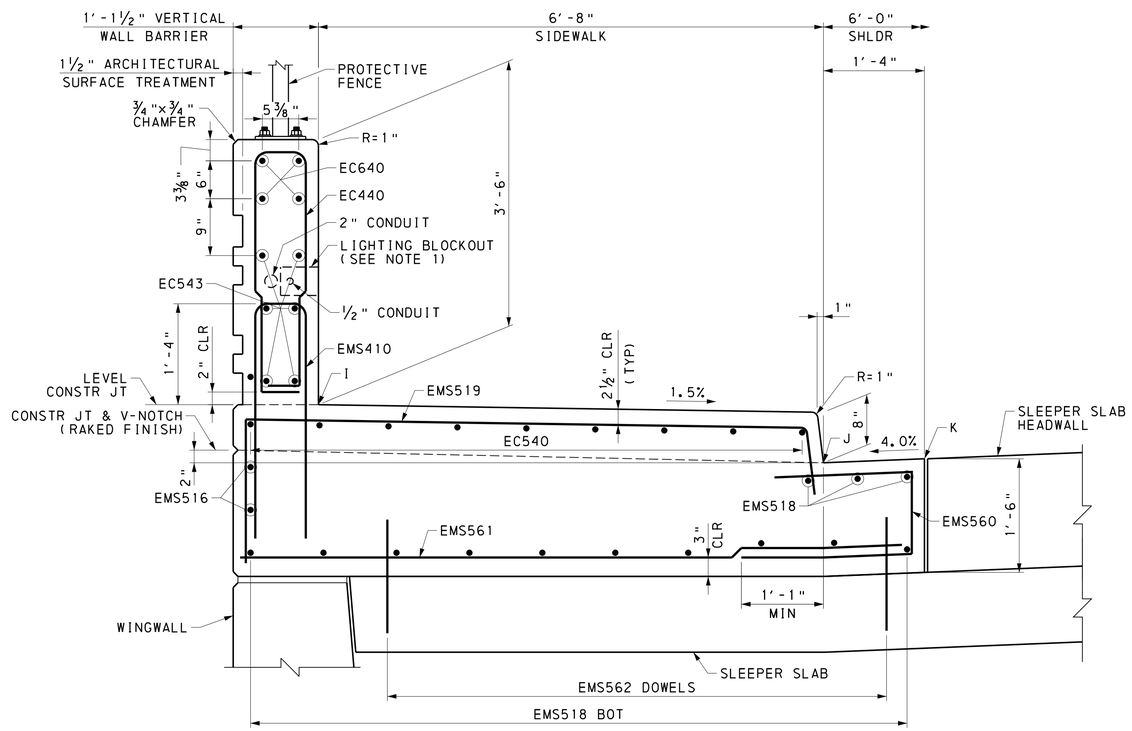

NORTHWEST MOMENT SLAB SECTION AE-AE (AT GRADE)

6 0 6 12 INCHES

REFERENCES:	SHEETS:
GENERAL PLAN	1
MOMENT SLAB GENERAL PLANS	2
GENERAL NOTES	4 & 5
STAKE-OUT PLAN	13
MOMENT SLAB DRAWINGS	67 - 78

Mark	Description	By	Chk'd	Recm'd	Date
REVISIONS					

SR 3013 PREVIOUSLY KNOWN AS LR 22075
BMS STR ID: 22-3013-0020-0291 MPMS/ECMS PROJ: 97828 BRKEY: 67416

HNTB

COMMONWEALTH OF PENNSYLVANIA
REGISTERED PROFESSIONAL
JUSTIN ROBERT MCCARTHY
ENGINEER
PE076998

PREPARED BY:
HNTB CORPORATION
4507 NORTH FRONT STREET
SUITE 300
HARRISBURG, PA 17110

COMMONWEALTH OF PENNSYLVANIA
DEPARTMENT OF TRANSPORTATION

DAUPHIN COUNTY
SR 0083 SECTION 079
SEG 0020 OFFSET 0291
SR 3013 (29TH STREET) STA 37+78.24 OVER
SR 0083 & NORFOLK SOUTHERN RAILWAY COMPANY
3-SPAN CONTINUOUS COMPOSITE PS CONCRETE
PA BULB-TEE BEAM BRIDGE
MOMENT SLAB DETAILS 10

RECOMMENDED 12-6-2022

S-39451

6/21/2022
FILENAME: 63016-s-brB1-mom10.dgn

DES: MCA | DES CKD: JDH | DWG: JTM | DWG CKD: CEK

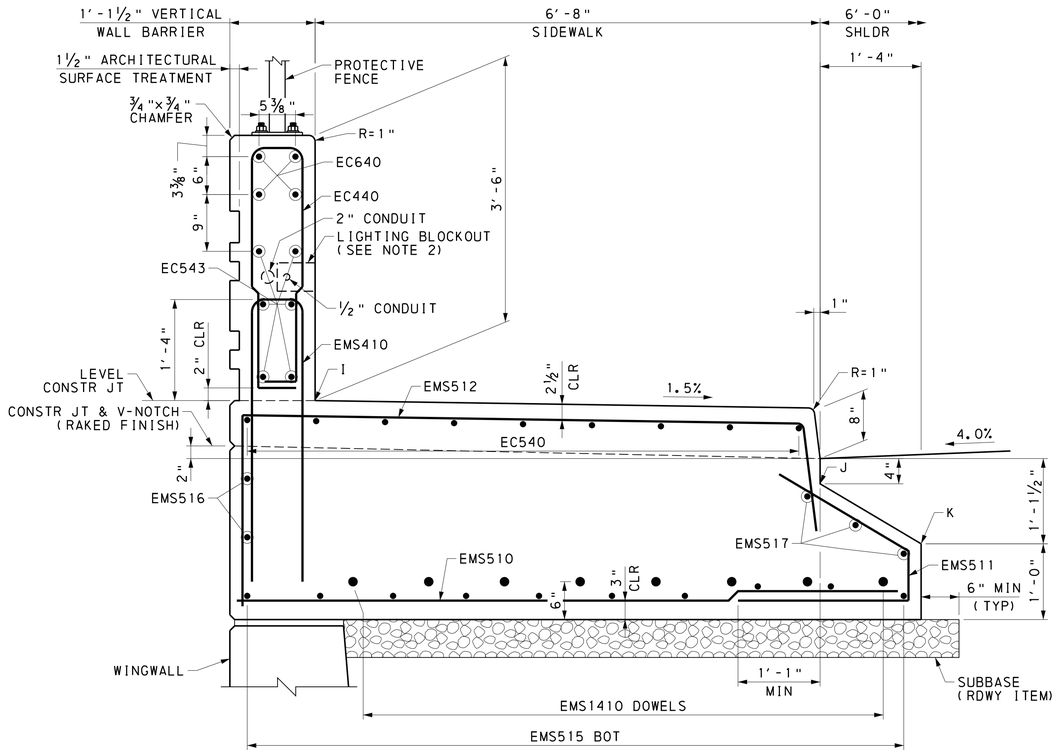

NORTHWEST MOMENT SLAB SECTION AF-AF (BURIED)

6 0 6 12 INCHES

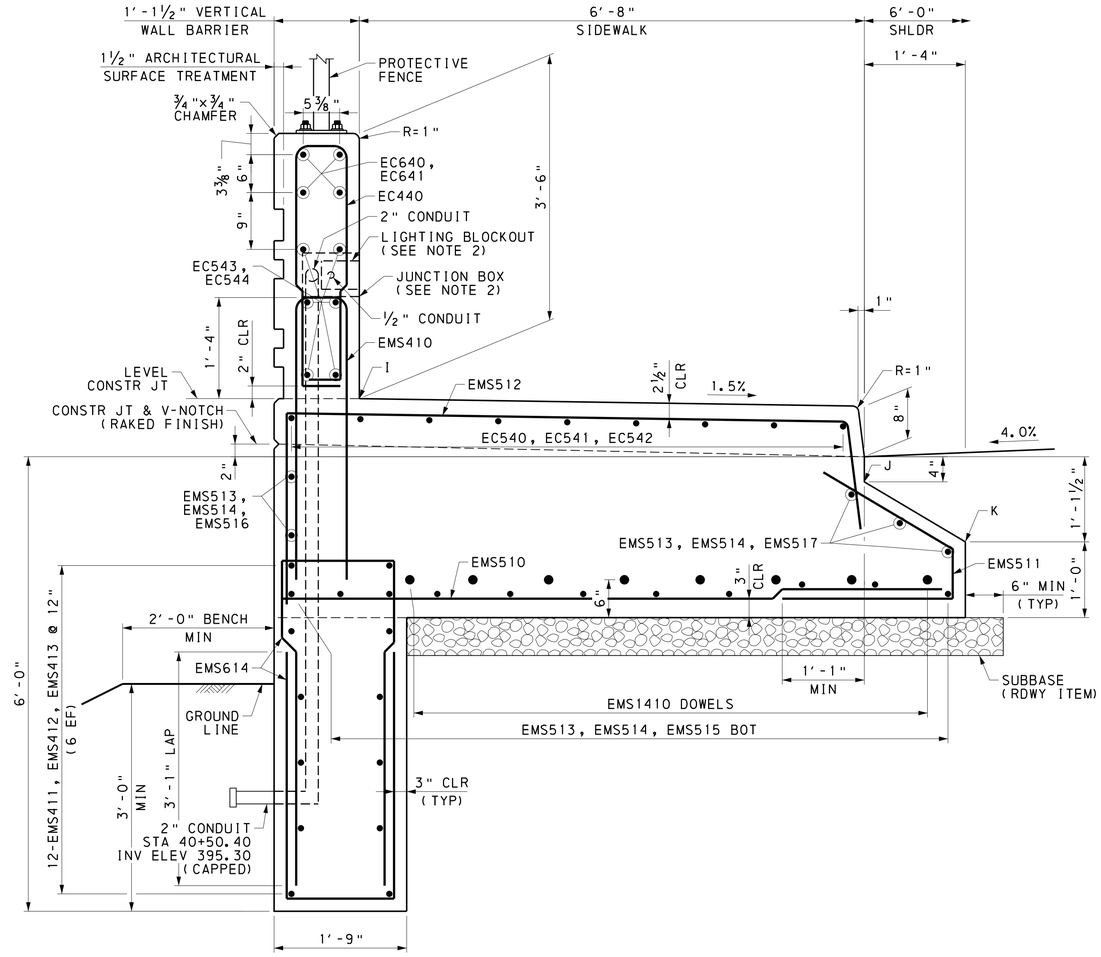

NORTHWEST MOMENT SLAB SECTION AG-AG (BURIED)

6 0 6 12 INCHES

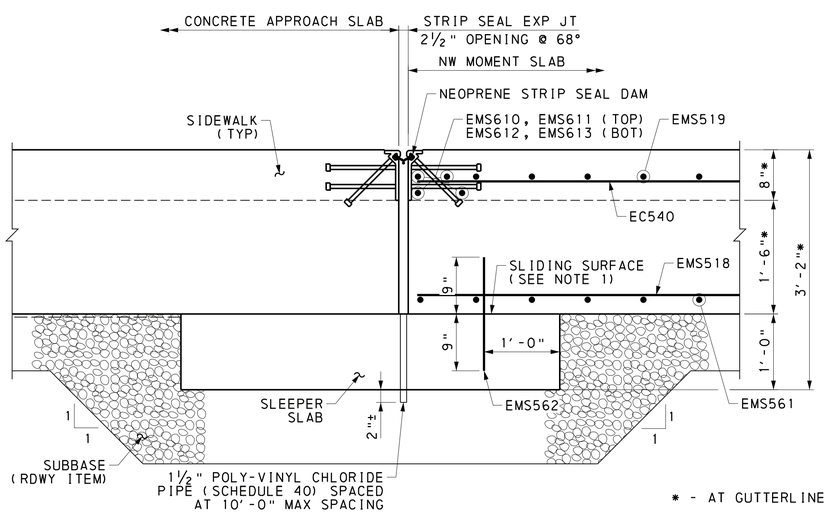

SECTION AH-AH

6 0 6 12 INCHES

(APPROACH SLAB & SLEEPER SLAB REINFORCEMENT NOT SHOWN FOR CLARITY)

NOTES:

1. TROWEL SMOOTH AND PLACE 2 LAYERS OF 4 MIL. POLYETHELYNE SHEETING AS BOND BREAKER.
2. PROVIDE ONE ADDITIONAL EC440 BAR ON EACH SIDE OF LIGHTING BLOCKOUT (LAP WITH EMS410). ADJUST REINFORCEMENT AS REQUIRED TO ACCOMMODATE PLACEMENT OF JUNCTION BOXES AND LIGHTING BLOCKOUTS. SEE HIGHWAY LIGHTING ALSO PLAN FOR PLACEMENT OF JUNCTION BOXES AND LUMINAIRES.

REFERENCES:	SHEETS:
GENERAL NOTES	4 & 5
STAKE-OUT PLAN	13
MOMENT SLAB DRAWINGS	67 - 78

Mark	Description	By	Chk'd	Recm'd	Date
REVISIONS					

SR 3013 PREVIOUSLY KNOWN AS LR 22075
BMS STR ID: 22-3013-0020-0291 MPMS/ECMS PROJ: 97828 BRKEY: 67416

HNTB

COMMONWEALTH OF PENNSYLVANIA REGISTERED PROFESSIONAL JUSTIN ROBERT MCCARTHY ENGINEER PE076998

COMMONWEALTH OF PENNSYLVANIA
DEPARTMENT OF TRANSPORTATION

DAUPHIN COUNTY
SR 0083 SECTION 079
SEG 0020 OFFSET 0291
SR 3013 (29TH STREET) STA 37+78.24 OVER
SR 0083 & NORFOLK SOUTHERN RAILWAY COMPANY
3-SPAN CONTINUOUS COMPOSITE PS CONCRETE
PA BULB-TEE BEAM BRIDGE
MOMENT SLAB DETAILS 11

PREPARED BY:
HNTB CORPORATION
4507 NORTH FRONT STREET
SUITE 300
HARRISBURG, PA 17110

RECOMMENDED 12-6-2022

SHEET 77 OF 93

S-39451

6/23/2022
FILENAME: 63016-s-brB1-momll.dgn

DES: MCA	DES CKD: JDH	DWG: JTM	DWG CKD: CEK

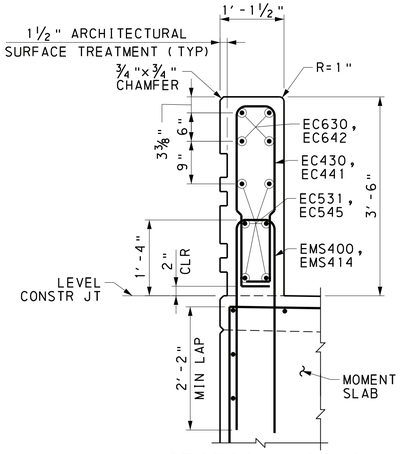

SECTION AI-AI

12 0 12 INCHES

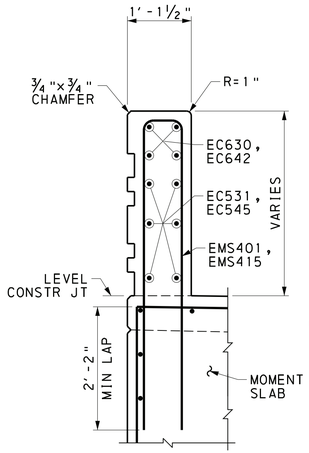

SECTION AJ-AJ

12 0 12 INCHES

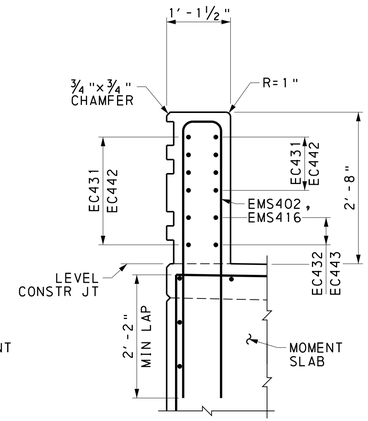

SECTION AK-AK

12 0 12 INCHES

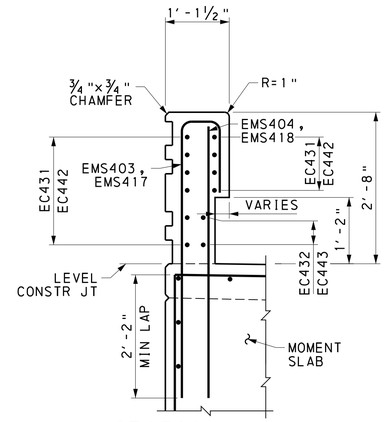

SECTION AL-AL

12 0 12 INCHES

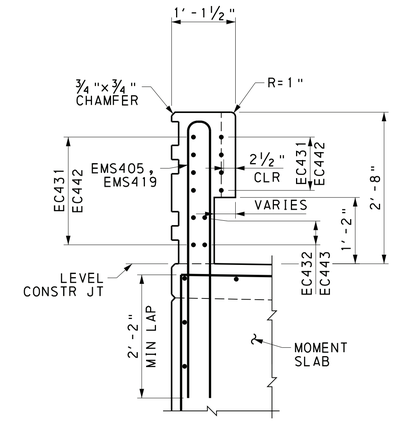

SECTION AM-AM

12 0 12 INCHES

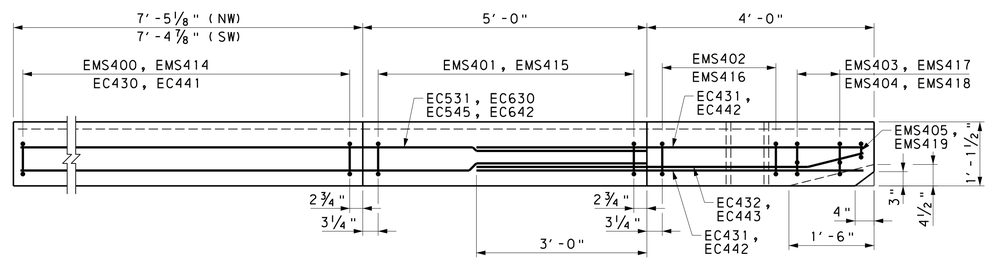

PLAN

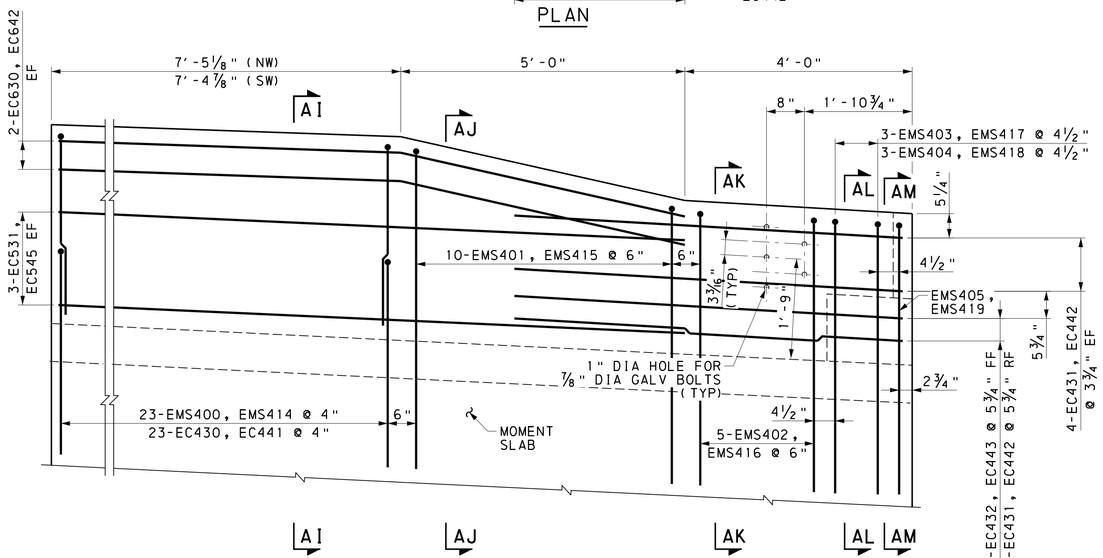

(LONGITUDINAL MOMENT SLAB REINFORCEMENT NOT SHOWN FOR CLARITY)

ELEVATION

42" VERTICAL WALL CONCRETE BARRIER END TRANSITION

12 0 12 INCHES

(NORTHWEST BARRIER SHOWN, SOUTHWEST BARRIER SIMILAR BY OPPOSITE HAND)

NOTES:

1. EMS400, EC430, EC530 AND EC630 REINFORCEMENT SERIES DENOTES SOUTHWEST MOMENT SLAB REINFORCEMENT.
2. EMS410, EC440, EC540 AND EC640 REINFORCEMENT SERIES DENOTES NORTHWEST MOMENT SLAB REINFORCEMENT.

Mark	Description	By	Chk'd	Recm'd	Date
REVISIONS					

SR 3013 PREVIOUSLY KNOWN AS LR 22075
BMS STR ID: 22-3013-0020-0291 MPMS/ECMS PROJ: 97828 BRKEY: 67416

HNTB

COMMONWEALTH OF PENNSYLVANIA
DEPARTMENT OF TRANSPORTATION

DAUPHIN COUNTY
SR 0083 SECTION 079
SEG 0020 OFFSET 0291
SR 3013 (29TH STREET) STA 37+78.24 OVER
SR 0083 & NORFOLK SOUTHERN RAILWAY COMPANY
3-SPAN CONTINUOUS COMPOSITE PS CONCRETE
PA BULB-TEE BEAM BRIDGE
MOMENT SLAB DETAILS 12

COMMONWEALTH OF PENNSYLVANIA
REGISTERED PROFESSIONAL
JUSTIN ROBERT MCCARTHY
ENGINEER
PE076998

REFERENCES:	SHEETS:
MOMENT SLAB GENERAL PLAN	2
GENERAL NOTES	4 & 5
MOMENT SLAB DRAWINGS	67 - 78

PREPARED BY:
HNTB CORPORATION
4507 NORTH FRONT STREET
SUITE 300
HARRISBURG, PA 17110

RECOMMENDED 12-6-2022

S-39451

6/23/2023
FILENAME: 63016-s-br81-mom12.dgn

DES: MCA | DES CKD: JDH | DWG: JTM | DWG CKD: CEK

MARK	SIZE	NO REQ'D	LENGTH	TYPE	A	B	C	D	E	REMARKS
SOUTHEAST MOMENT SLAB #1										
EC450	4	298	8'-1"	17	2'-9 1/2"	3 3/8"	2'-7 3/4"	6 3/4"	5"	H = 3 3/8", R=2"
EC550	5	30	29'-7"	STR						
EC551	5	6	18'-7"	STR						
EC650	6	20	29'-7"	STR						
EC651	6	4	18'-7"	STR						
EMS520	5	172	9'-4"	STR						
EMS521	5	99	29'-7"	STR						
EMS522	5	23	18'-7"	STR						
EMS523	5	12	10'-11"	STR						
EMS524	5	8	4'-7"	STR						
EMS525	5	32	4'-0"	STR						
EMS526	5	8	12'-0"	STR						
EMS527	5	8	19'-8"	STR						
EMS528	5	8	4'-9"	STR						
EMS529	5	8	12'-5"	STR						
EMS620	6	164	10'-0"	65	8"	9'-4"				J = 6"
EMS621	6	285	9'-5 1/8"	24	3'-0"	1 7/8"	1'-3 3/4"	1'-10"	2'-1 1/4"	H = 9", R = 2 1/4"
EMS622	6	13	7'-1 1/8"	24B	3'-0"	1 7/8"	1'-3 3/4"	2'-0"		H = 9", R = 2 1/4"
EMS623	6	8	4'-7 1/2"	STR						
EMS721	7	8	10'-2"	65	10"	9'-4"				J = 7"
EMS1420	14	40	1'-6"	STR						DOWEL
SOUTHEAST MOMENT SLAB #2										
EC460	4	48	7'-9 1/2"	10	2'-9"	4"	3"	2'-9"	5 1/2"	H = 3", R = 2"
EC461	4	34	8'-1"	17	2'-9 1/2"	3 3/8"	2'-7 3/4"	6 3/4"	5"	H = 3 3/8", R = 2"
EC560	5	6	15'-8"	STR						
EC561	5	6	16'-2"	STR						
EC660	6	4	15'-8"	STR						
EC661	6	4	16'-2"	STR						
EMS430	4	48	7'-10"	27	2'-4 1/2"	4"	3"	2'-2"	2'-0 1/2"	R = 2"
EMS431	4	34	7'-9 1/4"	24A	2'-2"	4"	1'-2"	1'-2"	2'-0 1/2"	F = 1 1/4", H = 7", R = 2"
EMS530	5	18	12'-5"	STR						
EMS531	5	4	15'-8"	STR						
EMS532	5	4	16'-2"	STR						
EMS533	5	26	15'-8 1/2" TO	STR						VARY 2 EACH BY 3/8"
			16'-1"							
EMS534	5	11	1'-6"	STR						DOWEL
EMS630	6	18	13'-1"	65	8"	12'-5"				J = 6"
EMS631	6	2	12'-5"	STR						

MARK	SIZE	NO REQ'D	LENGTH	TYPE	A	B	C	D	E	REMARKS
SOUTHWEST MOMENT SLAB										
EMS400	4	23	7'-11"	39	3'-6"	4"	3"	3'-6"		R = 2"
EMS401	4	10	10'-1 3/4" TO	39	4'-8" TO	2 3/8"	5"	4'-8" TO		VARY A & D EACH BY 1 1/8"(-)
			11'-9 3/4"		5'-6"			5'-6"		R = 1"
EMS402	4	5	10'-1 3/4"	39	4'-8"	2 3/8"	5"	4'-8"		R = 1"
EMS403	4	3	6'-6 1/4"	39	4'-8"	2 3/8"	5"	1' 0 1/2"		R = 1"
EMS404	4	3	5'-0"	STR						
EMS405	4	1	9'-11 1/4"	39	4'-10"	3 1/8"	0"	4'-8 1/2"		R = 1 1/2"
EMS500	5	2	10'-2"	41	1'-9"	7'-5"	1'-0"			E = 3/8", H = 1 1/2"
EMS501	5	22	11'-4"	41	2'-5"	7'-5"	1'-6"			E = 1/2", H = 1 3/8"
EMS502	6	2	5'-1"	31	2'-4"	1'-0"	1'-9"			
EMS503	5	22	4'-11"	33	2'-4"	7"	2'-0"		1'-0 1/4"	
EMS504	5	3	8'-9"	STR						
EMS505	5	22	8'-9"	STR						
EMS506	5	7	1'-6"	STR						DOWEL
EMS507	5	10	13'-8" TO	STR						VARY EACH BY 1/2"
			14'-0 1/2"							
EMS508	5	2	16'-0"	STR						
EMS509	5	3	13'-8"	STR						
EMS570	5	13	1'-8"	STR						
EMS600	6	2	10'-2"	41	1'-9"	7'-5"	1'-0"			E = 3/8", H = 1 1/2"
EMS601	6	2	5'-1"	31	2'-4"	1'-0"	1'-9"			
EMS602	6	2	7'-5"	STR						
EMS603	6	2	2'-4"	STR						
EC430	4	23	7'-9 1/2"	10	2'-9"	4"	3"	2'-9"	5 1/2"	H = 3", R = 2"
EC431	4	10	6'-10"	STR						
EC432	4	2	6'-11"	78	5'-6"	1'-5"	4 1/8"			
EC530	5	9	15'-8" TO	STR						VARY EACH BY 1/2"
			16'-0"							
EC531	5	6	12'-1"	STR						
EC630	6	4	12'-4"	78	7'-3"	5'-1"	10"			

NOTES:

1. "E" PREFIX IN BAR MARK DENOTES EPOXY COATED BARS.
2. ALL DIMENSIONS ARE OUT TO OUT OF BAR EXCEPT "A" & "C" ON STANDARD 135° AND 180° HOOKS, UNLESS NOTED.
3. FOR REINFORCEMENT BAR FABRICATION DETAILS, REFER TO STANDARD DRAWING BC-736M.
4. FIGURES IN CIRCLE REPRESENT BAR TYPES.
5. "J" DIMENSIONS ON 180° HOOKS ARE SHOWN ONLY WHERE NECESSARY TO RESTRICT HOOK SIZE, OTHERWISE STANDARD HOOKS ARE TO BE USED.
6. RADIUS, "R" IS TO THE INSIDE OF THE BAR.
7. REINFORCEMENT BAR SCHEDULE IS FOR INFORMATION ONLY. VERIFY INFORMATION BEFORE FABRICATION.

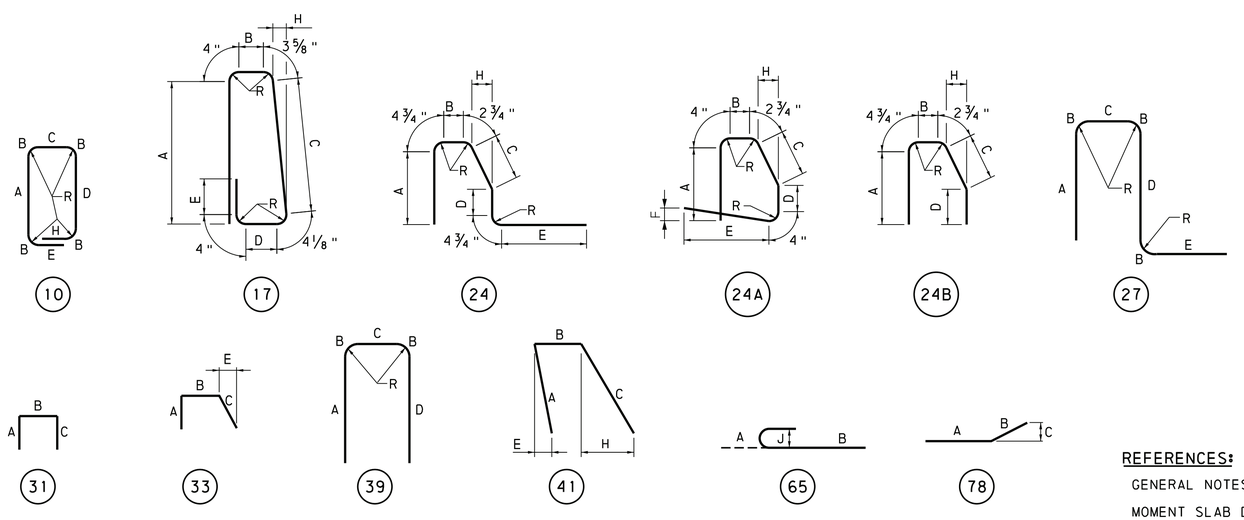

REFERENCES:	SHEETS:
GENERAL NOTES	4 & 5
MOMENT SLAB DRAWINGS	67 - 78

Mark	Description	By	Chk'd	Recm'd	Date
REVISIONS					

SR 3013 PREVIOUSLY KNOWN AS LR 22075
BMS STR ID: 22-3013-0020-0291 MPMS/ECMS PROJ: 97828 BRKEY: 67416

HNTB

COMMONWEALTH OF PENNSYLVANIA
REGISTERED PROFESSIONAL
JUSTIN ROBERT MCCARTHY
ENGINEER
PE076998

COMMONWEALTH OF PENNSYLVANIA
DEPARTMENT OF TRANSPORTATION

DAUPHIN COUNTY
SR 0083 SECTION 079
SEG 0020 OFFSET 0291
SR 3013 (29TH STREET) STA 37+78.24 OVER
SR 0083 & NORFOLK SOUTHERN RAILWAY COMPANY
3-SPAN CONTINUOUS COMPOSITE PS CONCRETE
PA BULB-TEE BEAM BRIDGE
NEAR MOMENT SLABS REBAR SCHEDULE

PREPARED BY:
HNTB CORPORATION
4507 NORTH FRONT STREET
SUITE 300
HARRISBURG, PA 17110

RECOMMENDED 12-6-2022

SHEET 79 OF 93

S-39451

6/23/2022
FILENAME: 63016-s-brB1-bar06.dgn

DES: MCA | DES CKD: CEK | DWG: SMZ | DWG CKD: CEK

BRIDGE 1

MARK	SIZE	NO REQ'D	LENGTH	TYPE	A	B	C	D	E	REMARKS
NORTHEAST MOMENT SLAB #1										
EC470	4	506	7'-9 1/2"	10	2'-9"	4"	3"	2'-9"	5 1/2"	H = 3", R = 2"
EC471	4	340	8'-1"	17	2'-9 1/2"	3 3/8"	2'-7 3/4"	6 3/4"	5"	H = 3 3/8", R = 2"
EC570	5	48	29'-7"	STR						
EC571	5	12	16'-6"	STR						
EC572	5	6	28'-9"	78	24'-2"	4'-7"	6"			
EC573	5	6	29'-5"	78	15'-11"	13'-6"	1'-5 3/4"			
EC574	5	4	29'-6"	78	24'-10"	4'-8"	6"			
EC575	5	4	28'-3"	78	15'-4"	12'-11"	1'-5"			
EC670	6	32	29'-7"	STR						
EC671	6	8	16'-6"	STR						
EC672	6	4	28'-9"	78	24'-2"	4'-7"	6"			
EC673	6	4	29'-5"	78	15'-11"	13'-6"	1'-5 3/4"			
EC674	6	4	29'-6"	78	24'-10"	4'-8"	6"			
EC675	6	4	28'-3"	78	15'-4"	12'-11"	1'-5"			
EMS440	4	75	7'-10"	27	2'-4 1/2"	4"	3"	2'-2"	2'-0 1/2"	R = 2"
EMS441	4	431	6'-10"	27	1'-8 1/2"	4"	3"	1'-8"	2'-0 1/2"	R = 2"
EMS442	4	51	7'-9 1/4"	24A	2'-2"	4"	1'-2"	1'-2"	2'-0 1/2"	F = 1 1/4", H = 7", R = 2"
EMS443	4	289	6'-9 1/4"	24A	1'-8"	4"	1'-2"	8"	2'-0 1/2"	F = 1 1/4", H = 7", R = 2"
EMS444	4	56	29'-7"	STR						
EMS445	4	14	16'-6"	STR						
EMS446	4	14	18'-9"	STR						
EMS447	4	14	29'-5"	78	15'-11"	13'-6"	1'-5 3/4"			
EMS540	5	136	29'-7"	STR						
EMS541	5	34	16'-6"	STR						
EMS542	5	4	28'-9"	78	24'-2"	4'-7"	6"			
EMS543	5	4	29'-5"	78	15'-11"	13'-6"	1'-5 3/4"			
EMS544	5	4	29'-6"	78	24'-10"	4'-8"	6"			
EMS545	5	4	28'-3"	78	15'-4"	12'-11"	1'-5"			
EMS546	5	204	12'-5"	STR						
EMS547	5	26	28'-10 1/2" TO	78	24'-3 1/2" TO	4'-7" TO	6"			VARY A EACH BY 1/2"
			29'-6"		24'-9 1/2"	4'-8 1/2"				VARY B 2 EACH BY 1/8"
EMS548	5	26	28'-5" TO	78	15'-5" TO	13'-0" TO	1-5" TO			VARY A EACH BY 1/2"
			29'-5 1/2"		15'-11"	13'-6 1/2"	1'-5 3/4"			VARY B EACH BY 1/8"
										VARY C 2 EACH
EMS549	5	11	1'-6"	STR						DOWEL
EMS640	6	206	13'-1"	65	8"	12'-5"				J = 6"
EMS641	6	386	9'-7"	31	4'-2"	1'-3"	4'-2"			
EMS642	6	2	12'-5"	STR						
EMS1440	14	60	1'-6"	STR						DOWEL
NORTHEAST MOMENT SLAB #2										
EC480	4	33	8'-1"	17	2'-9 1/2"	3 3/8"	2'-7 3/4"	6 3/4"	5"	H = 3 3/8", R = 2"
EC580	5	6	15'-11"	STR						
EC680	6	4	15'-11"	STR						
EMS550	5	17	9'-4"	STR						
EMS551	5	23	15'-11"	STR						
EMS650	6	17	10'-0"	65	8"	9'-4"				J = 6"
EMS651	6	33	9'-5 1/8"	24	3'-0"	1 7/8"	1'-3 3/4"	1'-10"	2'-1 1/4"	H = 9", R = 2 1/4"

MARK	SIZE	NO REQ'D	LENGTH	TYPE	A	B	C	D	E	REMARKS
NORTHWEST MOMENT SLAB										
EC440	4	135	7'-9 1/2"	10	2'-9"	4"	3"	2'-9"	5 1/2"	H = 3", R = 2"
EC441	4	23	7'-9 1/2"	10	2'-9"	4"	3"	2'-9"	5 1/2"	H = 3", R = 2"
EC442	4	10	6'-10"	STR						
EC443	4	2	6'-11"	78	5'-6"	1'-5"	4 1/8"			
EC540	5	9	29'-3" TO	STR						VARY EACH BY 1/2"
			29'-7"							
EC541	5	9	19'-7"	STR						
EC542	5	9	16'-1"	STR						
EC543	5	6	29'-3"	STR						
EC544	5	6	19'-7"	STR						
EC545	5	6	12'-1"	STR						
EC640	6	4	29'-3"	STR						
EC641	6	4	19'-7"	STR						
EC642	6	4	12'-4"	78	7'-3"	5'-1"	10"			
EMS410	4	135	7'-11"	39	3'-6"	4"	3"	3'-6"		R = 2"
EMS411	4	12	19'-2"	STR						
EMS412	4	12	19'-7"	STR						
EMS413	4	12	16'-1"	STR						
EMS414	4	23	7'-11"	39	3'-6"	4"	3"	3'-6"		R = 2"
EMS415	4	10	10'-1 3/4" TO	39	4'-8" TO	2 3/8"	5"	4'-8" TO		VARY A & D EACH BY 1 1/8"(-)
			11'-9 3/4"		5'-6"			5'-6"		R = 1"
EMS416	4	5	10'-1 3/4"	39	4'-8"	2 3/8"	5"	4'-8"		R = 1"
EMS417	4	3	6'-6 1/4"	39	4'-8"	2 3/8"	5"	1' 0 1/2"		R = 1"
EMS418	4	3	5'-0"	STR						
EMS419	4	1	9'-11 1/4"	39	4'-10"	3 1/8"	0"	4'-8 1/2"		R = 1 1/2"
EMS510	5	99	8'-9"	STR						
EMS511	5	99	4'-11"	33	2'-4"	7"	2'-0"		1'-0 1/4"	
EMS512	5	99	11'-4"	41	2'-5"	7'-5"	1'-6"			E = 1/2", H = 1 3/8"
EMS513	5	15	19'-7"	STR						
EMS514	5	15	16'-1"	STR						
EMS515	5	10	27'-3" TO	STR						VARY EACH BY 1/2"
			27'-7 1/2"							
EMS516	5	2	29'-3"	STR						
EMS517	5	3	27'-7"	STR						
EMS518	5	13	1'-8"	STR						
EMS519	5	3	10'-2"	41	1'-9"	7'-5"	1'-0"			E = 3/8", H = 1 1/2"
EMS560	6	3	5'-1"	31	2'-4"	1'-0"	1'-9"			
EMS561	5	3	8'-9"	STR						
EMS562	5	7	1'-6"	STR						DOWEL
EMS610	6	2	10'-2"	41	1'-9"	7'-5"	1'-0"			E = 3/8", H = 1 1/2"
EMS611	6	2	5'-1"	31	2'-4"	1'-0"	1'-9"			
EMS612	6	2	7'-5"	STR						
EMS613	6	2	1'-6"	STR						
EMS614	6	118	8'-11"	31	3'-10"	1'-3"	3'-10"			
EMS1410	14	16	1'-6"	STR						DOWEL

NOTES:

1. "E" PREFIX IN BAR MARK DENOTES EPOXY COATED BARS.
2. ALL DIMENSIONS ARE OUT TO OUT OF BAR EXCEPT "A" & "C" ON STANDARD 135° AND 180° HOOKS, UNLESS NOTED.
3. FOR REINFORCEMENT BAR FABRICATION DETAILS, REFER TO STANDARD DRAWING BC-736M.
4. FIGURES IN CIRCLE REPRESENT BAR TYPES.
5. "J" DIMENSIONS ON 180° HOOKS ARE SHOWN ONLY WHERE NECESSARY TO RESTRICT HOOK SIZE, OTHERWISE STANDARD HOOKS ARE TO BE USED.
6. RADIUS, "R" IS TO THE INSIDE OF THE BAR.
7. REINFORCEMENT BAR SCHEDULE IS FOR INFORMATION ONLY. VERIFY INFORMATION BEFORE FABRICATION.

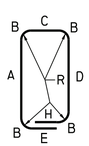

10

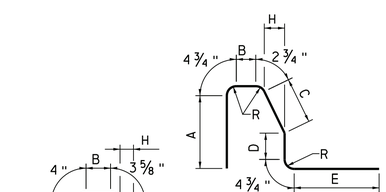

24

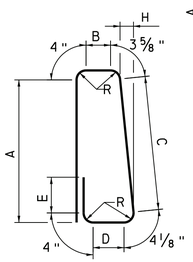

17

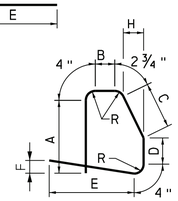

24A

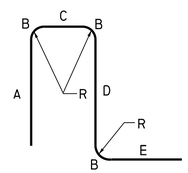

27

33

31

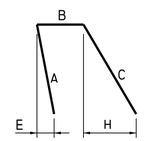

41

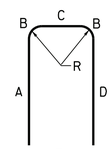

39

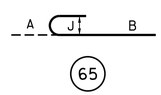

65

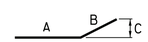

78

REFERENCES:

GENERAL NOTES	4 & 5
MOMENT SLAB DRAWINGS	67 - 78

Mark	Description	By	Chk'd	Recm'd	Date
REVISIONS					

SR 3013 PREVIOUSLY KNOWN AS LR 22075
BMS STR ID: 22-3013-0020-0291 MPMS/ECMS PROJ: 97828 BRKEY: 67416

HNTB

COMMONWEALTH OF PENNSYLVANIA REGISTERED PROFESSIONAL JUSTIN ROBERT MCCARTHY ENGINEER PE076998

PREPARED BY:
HNTB CORPORATION
4507 NORTH FRONT STREET
SUITE 300
HARRISBURG, PA 17110

COMMONWEALTH OF PENNSYLVANIA
DEPARTMENT OF TRANSPORTATION

DAUPHIN COUNTY
SR 0083 SECTION 079
SEG 0020 OFFSET 0291
SR 3013 (29TH STREET) STA 37+78.24 OVER
SR 0083 & NORFOLK SOUTHERN RAILWAY COMPANY
3-SPAN CONTINUOUS COMPOSITE PS CONCRETE
PA BULB-TEE BEAM BRIDGE
FAR MOMENT SLABS REBAR SCHEDULE

RECOMMENDED 12-6-2022

SHEET 80 OF 93

S-39451

6/23/2022
FILENAME 63016-s-br81-bar07.dgn

DES: MCA | DES CKD: CEK | DWG: SMZ | DWG CKD: CEK

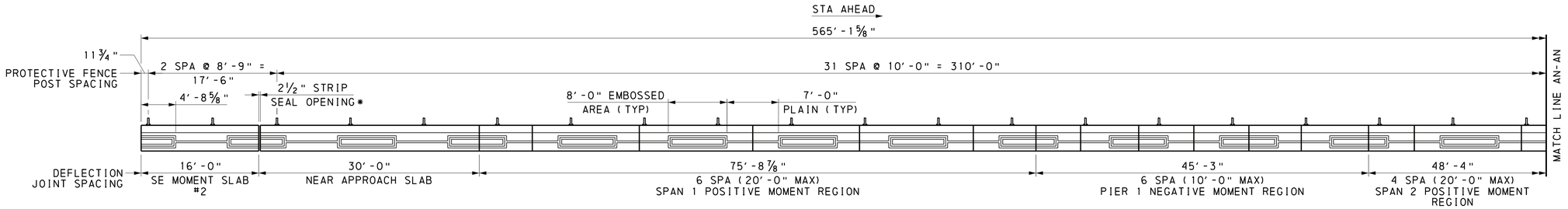

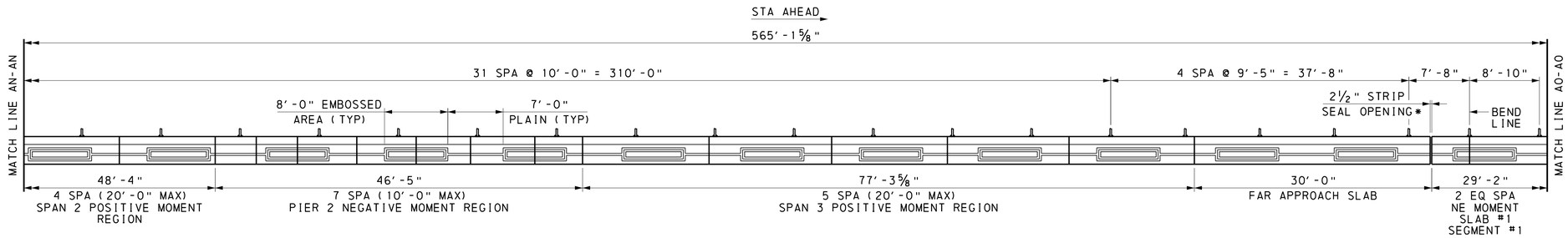

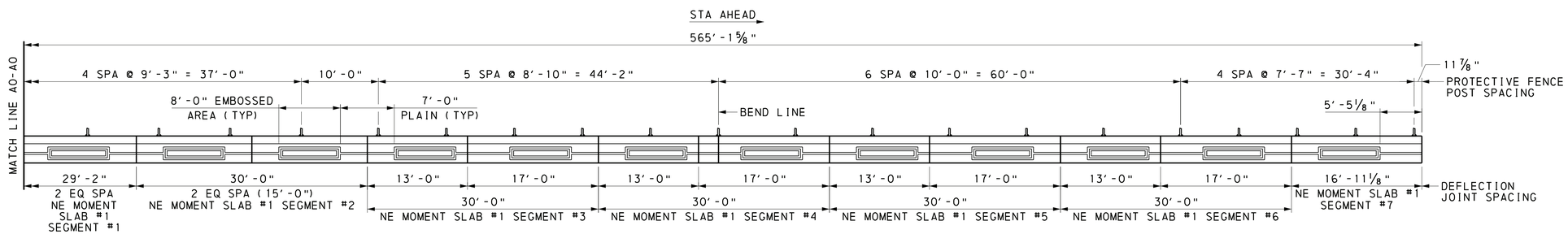

* MEASURED NORMAL TO SR 3013 CONSTR ℄

NOTES:

1. PROVIDE 9" MINIMUM DISTANCE BETWEEN CENTERLINE OF PROTECTIVE FENCE POST AND ADJACENT DEFLECTION JOINTS.

RIGHT BARRIER ELEVATION

2 0 4 8 FEET

(LOOKING AT OUTSIDE FACE OF BARRIER)
(SIMILAR FOR INTERIOR F-SHAPE BARRIER WITHOUT ARCHITECTURAL SURFACE TREATMENT OR PROTECTIVE FENCE POST SPACING)

Mark	Description	By	Chk'd	Recm'd	Date
REVISIONS					

SR 3013 PREVIOUSLY KNOWN AS LR 22075
BMS STR ID: 22-3013-0020-0291 MPMS/ECMS PROJ: 97828 BRKEY: 67416

REFERENCES:	SHEETS:
GENERAL NOTES	4 & 5
BARRIER & SIDEWALK DETAILS	52 & 53
APPROACH SLAB DETAILS	63 - 65
MOMENT SLAB DETAILS	67 - 78
PROTECTIVE FENCE DETAILS	83

HNTB

COMMONWEALTH OF PENNSYLVANIA REGISTERED PROFESSIONAL JUSTIN ROBERT MCCARTHY ENGINEER PE076998

PREPARED BY:
HNTB CORPORATION
4507 NORTH FRONT STREET
SUITE 300
HARRISBURG, PA 17110

COMMONWEALTH OF PENNSYLVANIA
DEPARTMENT OF TRANSPORTATION

DAUPHIN COUNTY
SR 0083 SECTION 079
SEG 0020 OFFSET 0291
SR 3013 (29TH STREET) STA 37+78.24 OVER
SR 0083 & NORFOLK SOUTHERN RAILWAY COMPANY
3-SPAN CONTINUOUS COMPOSITE PS CONCRETE
PA BULB-TEE BEAM BRIDGE
BARRIER ARCHITECTURAL DETAILS 1

RECOMMENDED 12-6-2022

S-39451

6/23/2022
FILENAME: 63016-s-brB1-s1b05.dgn

DES: MCA	DES CKD: JRM	DWG: SMZ	DWG CKD: JRM

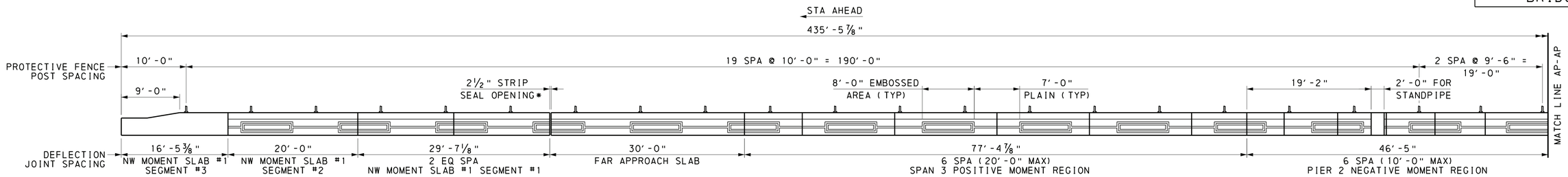

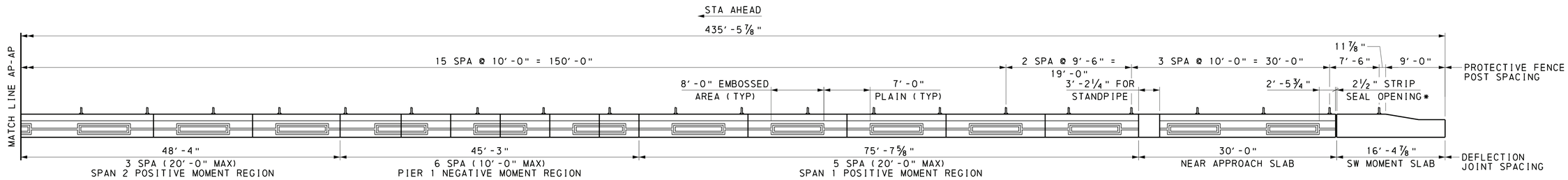

* MEASURED NORMAL TO SR 3013 CONSTR ℄

LEFT BARRIER ELEVATION

2 0 4 8 FEET

(LOOKING AT OUTSIDE FACE OF BARRIER)

NOTES:

1. PROVIDE 9" MINIMUM DISTANCE BETWEEN CENTERLINE OF PROTECTIVE FENCE POST AND ADJACENT DEFLECTION JOINTS.

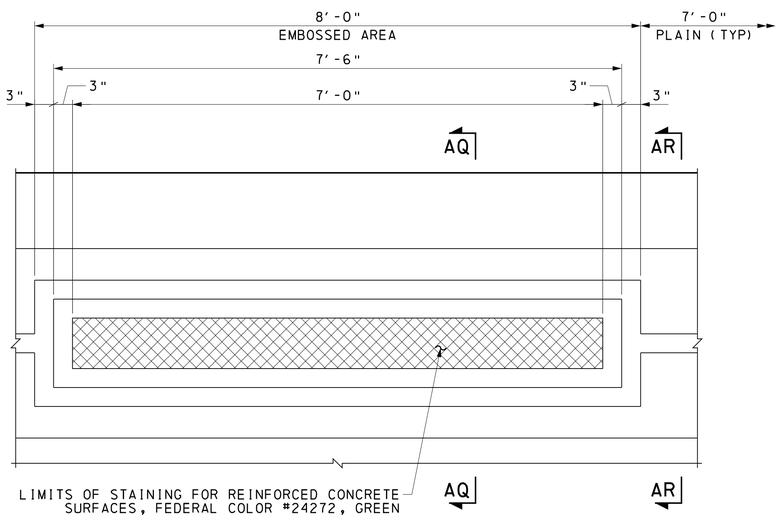

EMBOSSED SQUARE DETAIL

6 0 6 12 INCHES

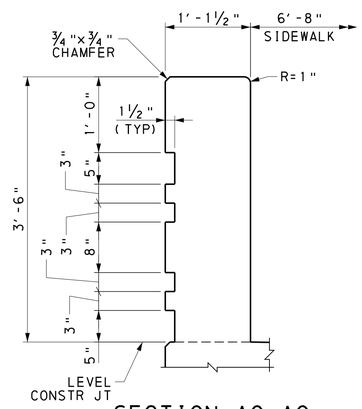

SECTION AQ-AQ

6 0 6 12 INCHES

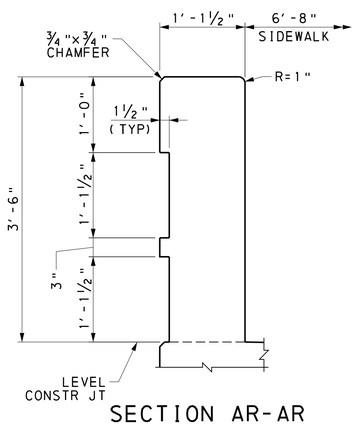

SECTION AR-AR

6 0 6 12 INCHES

(LEFT VERTICAL WALL BARRIER SHOWN, RIGHT BARRIER SIMILAR BY OPPOSITE HAND)

REFERENCES:	SHEETS:
GENERAL NOTES	4 & 5
BARRIER & SIDEWALK DETAILS	52 & 53
APPROACH SLAB DETAILS	63 - 65
MOMENT SLAB DETAILS	67 - 78
PROTECTIVE FENCE DETAILS	83

Mark	Description	By	Chk'd	Recm'd	Date
REVISIONS					

SR 3013 PREVIOUSLY KNOWN AS LR 22075
BMS STR ID: 22-3013-0020-0291 MPMS/ECMS PROJ: 97828 BRKEY: 67416

HNTB

COMMONWEALTH OF PENNSYLVANIA
REGISTERED PROFESSIONAL
JUSTIN ROBERT MCCARTHY
ENGINEER
PE076998

COMMONWEALTH OF PENNSYLVANIA
DEPARTMENT OF TRANSPORTATION

DAUPHIN COUNTY
SR 0083 SECTION 079
SEG 0020 OFFSET 0291
SR 3013 (29TH STREET) STA 37+78.24 OVER
SR 0083 & NORFOLK SOUTHERN RAILWAY COMPANY
3-SPAN CONTINUOUS COMPOSITE PS CONCRETE
PA BULB-TEE BEAM BRIDGE
BARRIER ARCHITECTURAL DETAILS 2

PREPARED BY:
HNTB CORPORATION
4507 NORTH FRONT STREET
SUITE 300
HARRISBURG, PA 17110

RECOMMENDED 12-6-2022

S-39451

6/23/2022
FILENAME: 63016-s-brB1-st06.dgn

DES: MCA	DES CKD: JRM	DWG: SMZ	DWG CKD: JRM

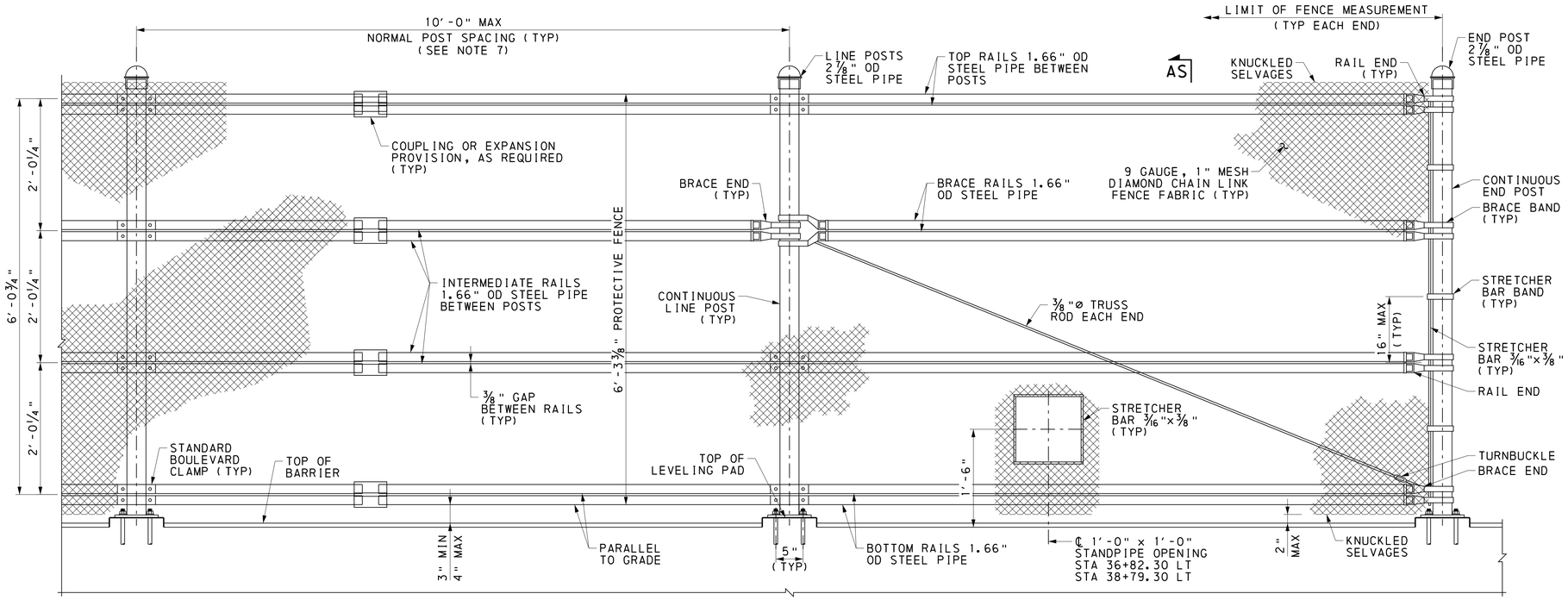

PROTECTIVE FENCE ELEVATION

6 0 6 12 INCHES

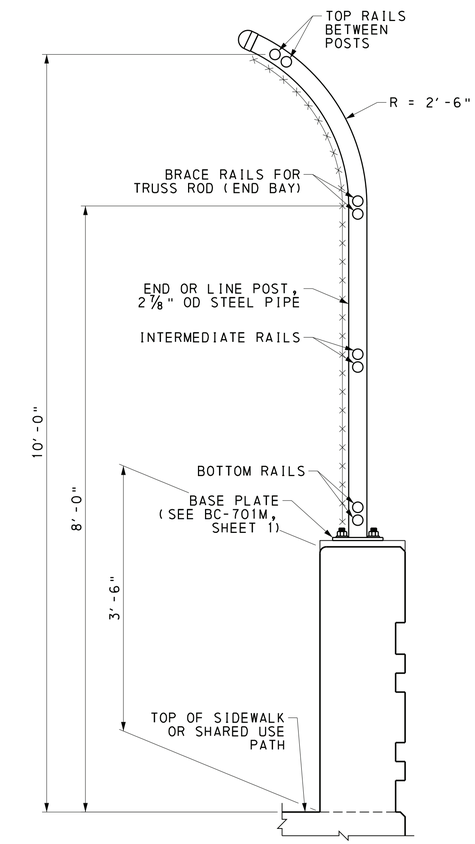

SECTION AS-AS

6 0 6 12 INCHES

NOTES:

1. REFER TO BC-701M FOR ADDITIONAL DETAILS.
2. WEST PROTECTIVE FENCE TO INITIATE AFTER SOUTHWEST MOMENT SLAB BARRIER TRANSITION AND TERMINATE PRIOR TO NORTHWEST MOMENT SLAB BARRIER TRANSITION.
3. EAST PROTECTIVE FENCE TO INITIATE AT BEGIN SOUTHEAST MOMENT SLAB #2 AND TERMINATE AT END OF NORTHEAST MOMENT SLAB #1.
4. INCLUDE ANTI-CLIMB SHIELD AT EACH END (4 TOTAL).
5. REFER TO SPECIAL PROVISIONS FOR ADDITIONAL INFORMATION.
6. COORDINATE PROTECTIVE FENCE ANCHOR BOLT LOCATIONS WITH PROTECTIVE FENCE FABRICATOR, BARRIER LUMINAIRES, AND JUNCTION BOXES. SEE HIGHWAY LIGHTING ALSO PLAN FOR LOCATIONS OF BARRIER LUMINAIRES AND JUNCTION BOXES.
7. REFER TO SHEETS 81 AND 82 FOR PROTECTIVE FENCE POST LOCATIONS AND SPACING.

REFERENCES:	SHEETS:
GENERAL PLAN	1
MOMENT SLAB GENERAL PLANS	2
TYPICAL SECTION & LOAD RATINGS	3
GENERAL NOTES	4 & 5
BARRIER & SIDEWALK DETAILS	52 & 53
APPROACH SLAB DETAILS	63 - 65
BARRIER ARCHITECTURAL DETAILS	81 & 82

Mark	Description	By	Chk'd	Recm'd	Date
REVISIONS					

SR 3013 PREVIOUSLY KNOWN AS LR 22075
BMS STR ID: 22-3013-0020-0291 MPMS/ECMS PROJ: 97828 BRKEY: 67416

HNTB

COMMONWEALTH OF PENNSYLVANIA
REGISTERED PROFESSIONAL
JUSTIN ROBERT MCCARTHY
ENGINEER
PE076998

PREPARED BY:
HNTB CORPORATION
4507 NORTH FRONT STREET
SUITE 300
HARRISBURG, PA 17110

COMMONWEALTH OF PENNSYLVANIA
DEPARTMENT OF TRANSPORTATION

DAUPHIN COUNTY
SR 0083 SECTION 079
SEG 0020 OFFSET 0291
SR 3013 (29TH STREET) STA 37+78.24 OVER
SR 0083 & NORFOLK SOUTHERN RAILWAY COMPANY
3-SPAN CONTINUOUS COMPOSITE PS CONCRETE
PA BULB-TEE BEAM BRIDGE
PROTECTIVE FENCE DETAILS

RECOMMENDED 12-6-2022

SHEET 83 OF 93

S-39451

6/23/2022
FILENAME: 63016-s-brB1-sib07.dgn

DES: MCA	DES CKD: JRM	DWG: SMZ	DWG CKD: JRM

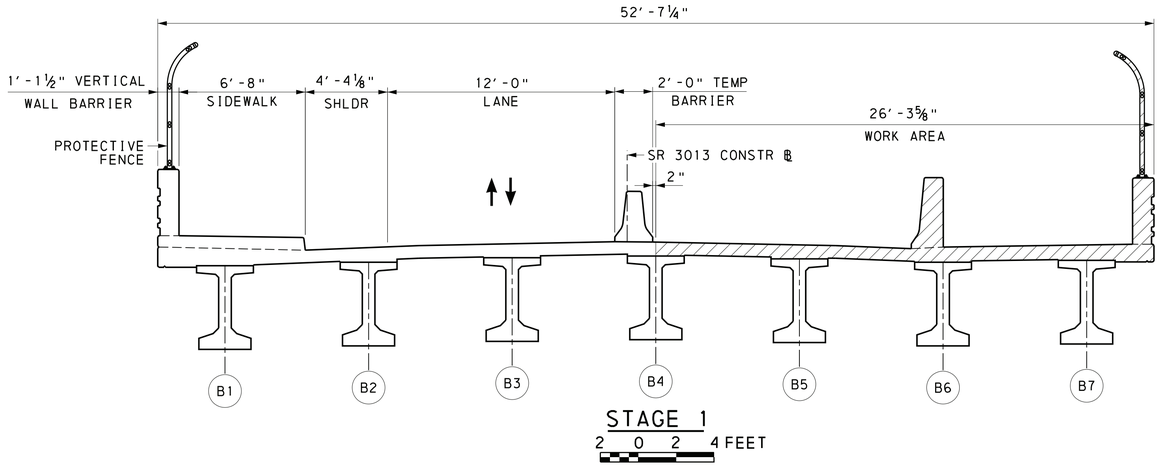

STAGE 1

2 0 2 4 FEET

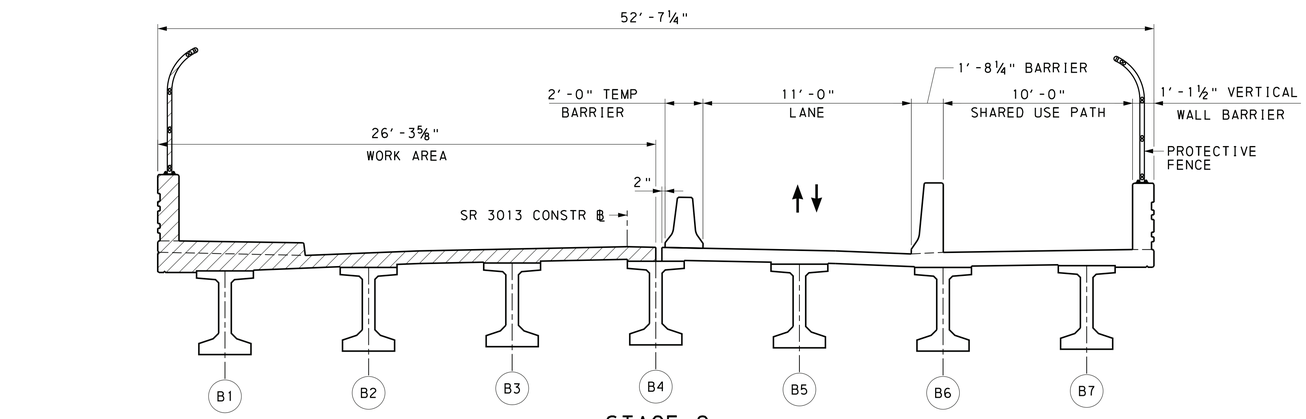

STAGE 2

2 0 2 4 FEET

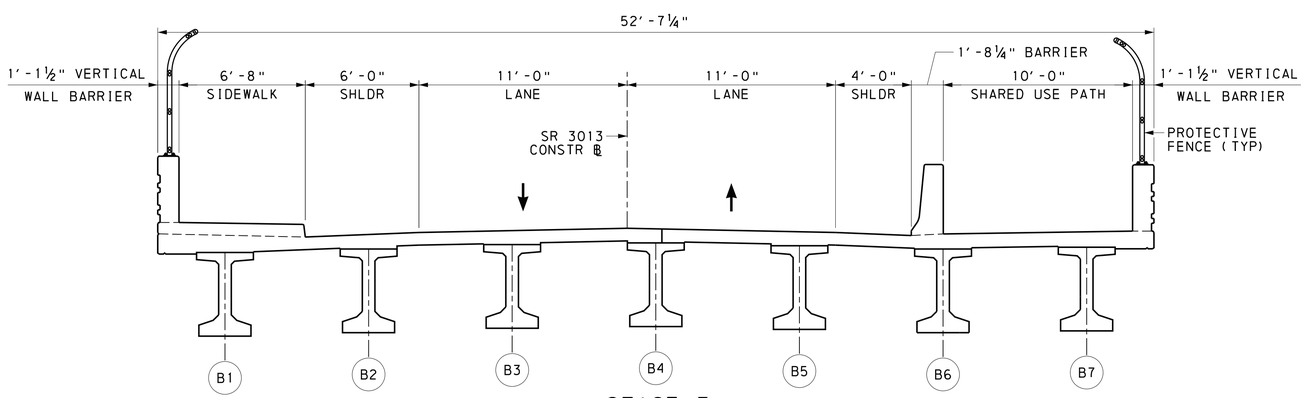

STAGE 3

2 0 2 4 FEET

NOTES:

1. THE INTENT OF THIS SHEET IS TO DESCRIBE AN AVAILABLE STAGING CONCEPT FOR FUTURE REDECKING OF THE BRIDGE. IT IS NOT TO BE USED FOR THE CONSTRUCTION DEPICTED IN THESE PLANS.
2. A FULL CLOSURE WITH A LOCAL DETOUR IS THE PREFERRED ALTERNATIVE COMPARED TO STAGED REDECKING. IF SINGLE LANE/BI-DIRECTIONAL TRAFFIC IS THE SELECTED ALTERNATIVE, THEN A TEMPORARY TRAFFIC SIGNAL IS RECOMMENDED.

SUGGESTED REDECKING SEQUENCE:

STAGE 1: PLACE TRAFFIC (ONE LANE ONLY WITH TRAFFIC CONTROL) ON THE SOUTHBOUND SIDE OF THE BRIDGE. REMOVE AND REPLACE DECK AND BARRIERS ON NORTHBOUND PORTION.

STAGE 2: PLACE TRAFFIC ON NEWLY CONSTRUCTED NORTHBOUND PORTION OF BRIDGE (ONE LANE ONLY WITH TRAFFIC CONTROL). REMOVE AND REPLACE DECK AND BARRIER ON SOUTHBOUND PORTION.

STAGE 3: OPEN BRIDGE TO TRAFFIC.

LEGEND:

LIMITS OF REMOVAL & RECONSTRUCTION

Mark	Description	By	Chk'd	Recm'd	Date
	REVISIONS				

SR 3013 PREVIOUSLY KNOWN AS LR 22075
BMS STR ID: 22-3013-0020-0291 MPMS/ECMS PROJ: 97828 BRKEY: 67416

HNTB

COMMONWEALTH OF PENNSYLVANIA
DEPARTMENT OF TRANSPORTATION

COMMONWEALTH OF PENNSYLVANIA REGISTERED PROFESSIONAL ENGINEER JUSTIN ROBERT MCCARTHY PE076998

DAUPHIN COUNTY
SR 0083 SECTION 079
SEG 0020 OFFSET 0291
SR 3013 (29TH STREET) STA 37+78.24 OVER
SR 0083 & NORFOLK SOUTHERN RAILWAY COMPANY

3-SPAN CONTINUOUS COMPOSITE PS CONCRETE
PA BULB-TEE BEAM BRIDGE

FUTURE REDECKING PLAN

PREPARED BY:
HNTB CORPORATION
4507 NORTH FRONT STREET
SUITE 300
HARRISBURG, PA 17110

RECOMMENDED 12-6-2022

SHEET 84 OF 93

S-39451

6/21/2022
FILENAME: 63016-s-br81-typ04.dgn

DES: MCA	DES CKD: JRM	DWG: SMZ	DWG CKD: JRM

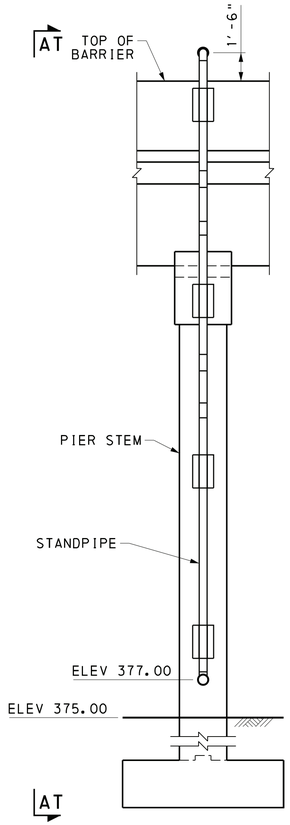

PIER 2 WEST END VIEW

2 0 2 4 FEET

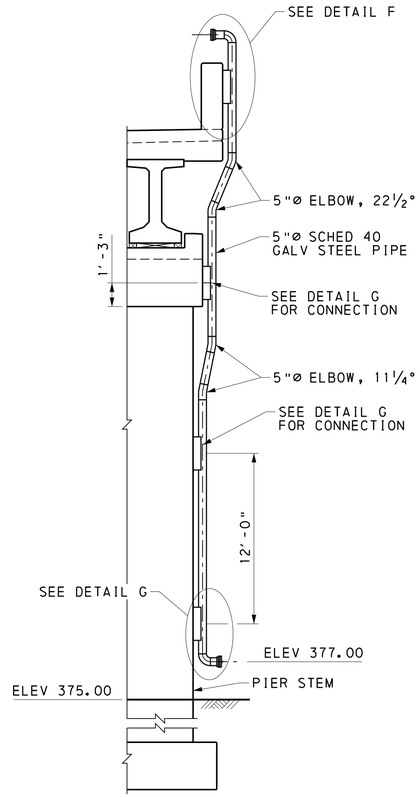

SECTION AT-AT

2 0 2 4 FEET

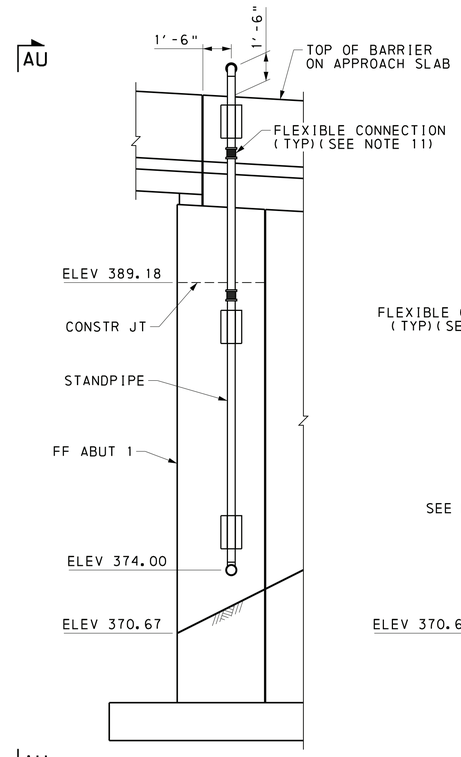

WINGWALL B ELEVATION

2 0 2 4 FEET

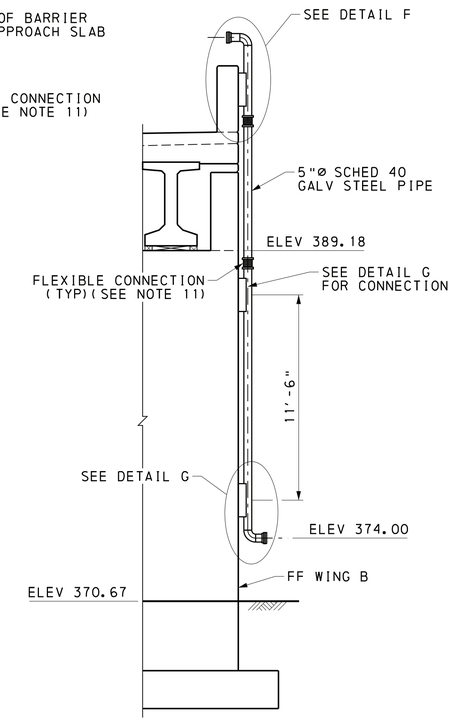

SECTION AU-AU

2 0 2 4 FEET

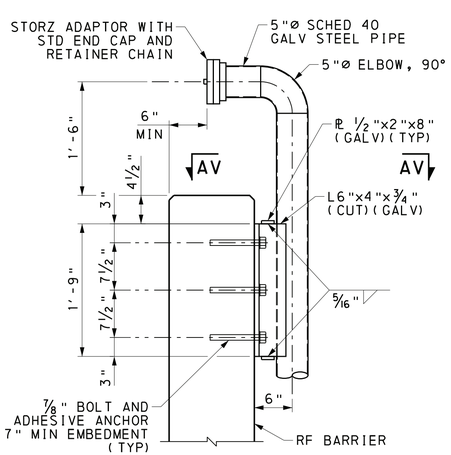

DETAIL F

6 0 6 12 INCHES

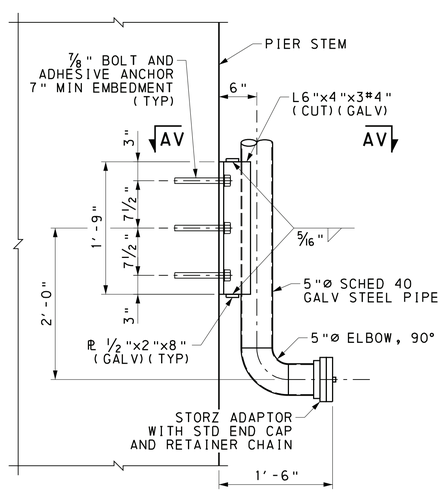

DETAIL G

6 0 6 12 INCHES

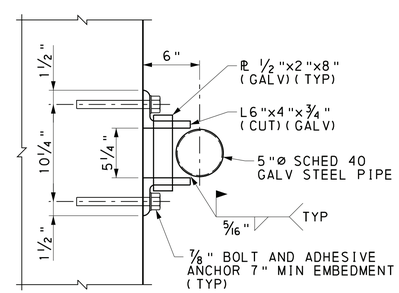

SECTION AV-AV

6 0 6 INCHES

NOTES:

1. PROVIDE MATERIALS AND PERFORM WORK IN ACCORDANCE WITH SPECIFICATIONS, PUBLICATION 408/2020, AASHTO/AWS D1.5M/D1.5 2008 BRIDGE WELDING CODE, AND THE CONTRACT SPECIAL PROVISIONS. (USE AASHTO/AWS D1.1/D1.1M:2008 FOR WELDING NOT COVERED IN AASHTO/AWS D1.5M/D1.5 2008).
2. PIPES ARE TO BE 5" DIAMETER SCHEDULE 40 IN ACCORDANCE WITH ASTM A53/A53M. PIPE DIAMETERS ARE NOMINAL SIZES FOR THE INSIDE DIAMETER OF THE PIPE. THE PIPE AND FITTINGS CAN HAVE THREADED, WELDED, FLANGED, AND/OR VICTAULIC, GRINNEL, OR EQUAL MECHANICAL COUPLINGS. THREADED COUPLINGS MAY BE USED PROVIDED THE PIPE OR FITTING DOES NOT HAVE TO RESIST TORSIONAL FORCES OR A SUPPORT IS PROVIDED TO RESIST THE TORSIONAL FORCES.
3. ALL FABRICATED STEEL MATERIAL IS TO BE GALVANIZED, AASHTO M270, GRADE 36 (ASTM A709, GRADE 36) EXCEPT WHERE NOTED OTHERWISE.
4. ALL STEEL MATERIALS ARE TO BE HOT-DIP GALVANIZED IN ACCORDANCE WITH PUB 408, SECTION 1105.02(s).
5. THE STANDPIPE SYSTEM IS DESIGNED FOR A MAXIMUM WORKING PRESSURE OF 250 PSI.
6. USE ADHESIVE ANCHOR SYSTEMS FOR PIPE SUPPORT ANCHOR BOLTS. INSTALL ANCHOR BOLTS IN ACCORDANCE WITH MANUFACTURER'S RECOMMENDATIONS.
7. PROVIDE STANDARD STORZ END CAPS AND RETAINING CHAINS AT ALL END CONNECTIONS.
8. PROVIDE A MINIMUM CLEARANCE OF 18" (RADIAL) FROM THE CENTER OF THE END CAP TO THE NEAREST OBSTRUCTION.
9. PROVIDE BLUE REFLECTIVE SIGNS AT BOTH ENDS OF STANDPIPE. ATTACH SIGNS TO FRONT FACE OF WINGWALL B, LEFT SIDE FACE OF PIER 2, AND INTERIOR FACE OF THE VERTICAL WALL BARRIERS WITH APPROPRIATE ANCHORS AND HARDWARE AS DIRECTED BY THE ENGINEER. FABRICATE SIGNS IN ACCORDANCE WITH PUBLICATION 408 SECTIONS 935.2 AND 1103.04.
10. SUBMIT SHOP DRAWINGS TO THE ENGINEER FOR REVIEW AND APPROVAL. VERIFY ELEVATIONS AND DIMENSIONS OF THE STRUCTURE IN THE FIELD PRIOR TO THE SUBMISSION OF SHOP DRAWINGS. USE PACHOMETER TO LOCATE REINFORCEMENT PRIOR TO DRILLING HOLES FOR INSTALLATION OF ANCHOR BOLTS. ADJUST PIPE SUPPORT AND ANCHOR BOLT LOCATIONS AS NECESSARY TO CLEAR REINFORCEMENT.
11. PROVIDE A FLEXIBLE METAL HOSE CONNECTION WITH BRAIDED CONFINEMENT. THE CONNECTION IS TO BE ATTACHED WITH FLANGED ENDS AND CONSTRUCTED OF STAINLESS STEEL TYPE 304, TYPE 316L, OR TYPE 321. THE EXPANSION SYSTEM MUST BE ABLE TO PROVIDE 1¼" OF LATERAL MOVEMENT IN EITHER DIRECTION.

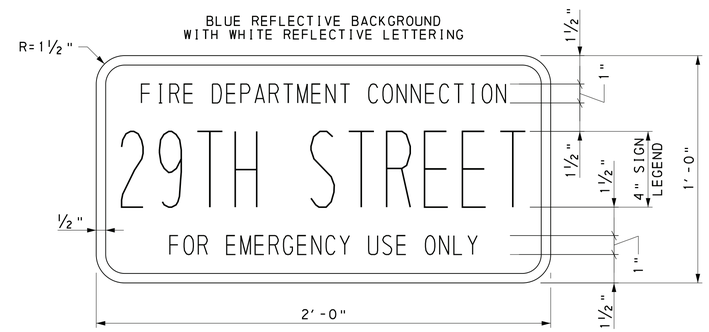

STANDPIPE SIGN

3 0 3 INCHES

REFERENCES:	SHEETS:
GENERAL PLAN	1
GENERAL NOTES	4 & 5

SUMMARY OF APPROXIMATE QUANTITIES (ITEM 9000-0507)

DESCRIPTION	UNIT	QUANTITY	
		WING B	PIER 2
5"ø SCHED 40 GALV STEEL PIPE	LF	29	36
5"ø ELBOW, 90°	EA	2	2
5"ø ELBOW, 22½°	EA	- - -	2
5"ø ELBOW, 11¼°	EA	- - -	2
5"ø STORZ FITTING	EA	2	2
STORZ END CAP AND CHAIN	EA	2	2
FABRICATED STRUCTURAL STEEL	LB	262	350
⅞" ADHESIVE ANCHORS	EA	18	24
SIGN	EA	2	2

NOTE: QUANTITIES ARE FOR INFORMATION ONLY.

Mark	Description	By	Chk'd	Recm'd	Date
REVISIONS					

SR 3013 PREVIOUSLY KNOWN AS LR 22075

BMS STR ID: 22-3013-0020-0291 MPMS/ECMS PROJ: 97828 BRKEY: 67416

HNTB

COMMONWEALTH OF PENNSYLVANIA REGISTERED PROFESSIONAL JUSTIN ROBERT MCCARTHY ENGINEER PE076998

PREPARED BY:

HNTB CORPORATION
4507 NORTH FRONT STREET
SUITE 300
HARRISBURG, PA 17110

COMMONWEALTH OF PENNSYLVANIA
DEPARTMENT OF TRANSPORTATION

DAUPHIN COUNTY
SR 0083 SECTION 079
SEG 0020 OFFSET 0291
SR 3013 (29TH STREET) STA 37+78.24 OVER
SR 0083 & NORFOLK SOUTHERN RAILWAY COMPANY

3-SPAN CONTINUOUS COMPOSITE PS CONCRETE
PA BULB-TEE BEAM BRIDGE

STANDPIPE DETAILS

RECOMMENDED 12-6-2022

SHEET 85 OF 93

S-39451

6/23/2022
FILENAME: 63016-s-brB1-de101.dgn

DES: SMZ	DES CKD: CEK	DWG: SMZ	DWG CKD: CEK

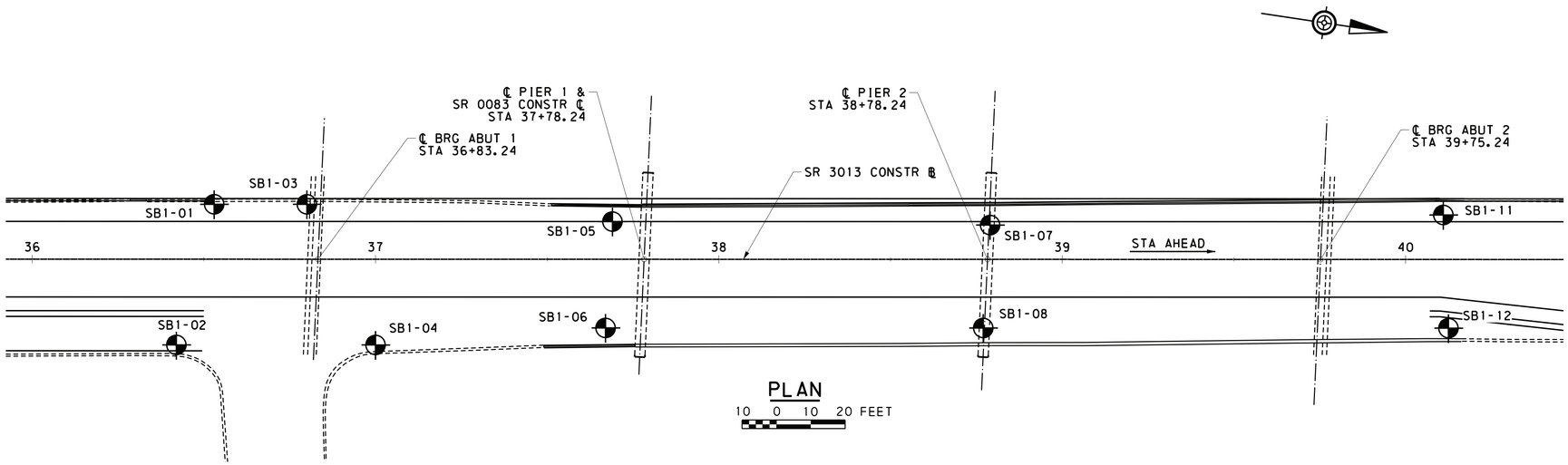

PLAN

10 0 10 20 FEET

GENERAL NOTES

THIS SHEET IS INCLUDED FOR THE CONVENIENCE OF THE DEPARTMENT. REFER TO PUBLICATION 408 SECTION 102.05 FOR FURTHER INFORMATION.

FOR ADDITIONAL SOIL AND ROCK DESCRIPTIONS SEE PUBLICATION 222.

THE BORING LOGS AND RELATED INFORMATION DEPICT SUBSURFACE CONDITIONS ONLY AT THE SPECIFIC LOCATIONS AND DATES INDICATED. SUBSURFACE CONDITIONS MAY DIFFER FROM THE CONDITIONS REPORTED AT THE SPECIFIC LOCATIONS. ALSO, THE PASSAGE OF TIME MAY RESULT IN A CHANGE OF CONDITIONS AT THE BORING LOCATIONS.

LEGEND

PP	POCKET PENETROMETER
T	TORVANE
NTS	NOT TO SCALE
BCA	BOTTOM OF COARSE AGGREGATE
BFE	BOTTOM OF FOOTING ELEVATION
TOR	ESTIMATED TOP OF ROCK ELEVATION

THE DESCRIPTIONS OF THE MATERIALS ENCOUNTERED HAVE BEEN VERIFIED.

ML

THE SUBSURFACE EXPLORATION DATA THAT ARE PRESENTED ON THESE DRAWINGS (INCLUDING BORING LOGS, EARTH SAMPLES, ROCK CORES, CLASSIFICATION OF MATERIALS AND DEPTH OF BORINGS) ACCURATELY REPRESENT THE CONDITIONS ENCOUNTERED BY THE TEST BORING PROGRAM AT EACH BORING LOCATION.

GEOTECHNICAL ENGINEER/ENGINEERING GEOLOGIST — DATE: 5/13/2021

SR 3013 PREVIOUSLY KNOWN AS LR 22075
BMS STR ID:22-3013-0020-0291 MPMS/ECMS PROJ:97828 BRKEY:67416

COMMONWEALTH OF PENNSYLVANIA
DEPARTMENT OF TRANSPORTATION

DAUPHIN COUNTY
SR 0083 SECTION 079
SEG 0020 OFFSET 0291
SR 3013 (29TH STREET) STA 37+78.24 OVER
SR 0083 & NORFOLK SOUTHERN RAILWAY COMPANY
3-SPAN CONTINUOUS COMPOSITE P/S CONCRETE
PA BULB-TEE BEAM BRIDGE
STRUCTURE BORINGS - 1

COMMONWEALTH OF PENNSYLVANIA
REGISTERED PROFESSIONAL
MARK T. EVANS
GEOLOGIST
PG005251

S - 39451

\\fileserver\SCI-NET\01Projects\36002 (SR 83, Sec 079 - River to Eisenhower)\SR 83, Sec 079\GEOTECHNICAL\CADD\WORKING FILES\TEST BORING SHEETS\B1\36002-079_TB_B1.dgn
3/4/2022 11:29:22 AM rrichards

SUBSTRUCTURE UNIT: LOG 1 OF 1

SUBSTRUCTURE - ABUTMENT 1 AND ASSOCIATED WINGWALLS

BORING NUMBER:	BORING LOCATION	START: 12/18/2020 9:15 AM	HAMMER: AUTOMATIC
SB1-01	STATION: 36+53.0 OFFSET: 16.0 FT. LT.	FINISH: 12/18/2020 3:15 PM	EFFICIENCY: 0.8 ERa

DRILLING METHOD AND EQUIPMENT:	SIZE OF CORE:	VERTICAL SCALE:	TOP OF BORING ELEVATION:
DOUBLE TUBE WIRE LINE-NQ, AUTOMATIC, ACKER XLS TRACK MOUNT RIG	2.000 IN.	0 FT. 5 FT. [redacted]	386.8 FT.

DRILLING INSPECTOR: HUNTER FENK
DRILLER & DRILLING COMPANY: TIM MEHALICK
NAVARRO & WRIGHT

0 HR. READING - ELAPSED TIME: El. 351.2 ft. - 0.3 hr. [1]
24 HR. READING - ELAPSED TIME: NR - NR

ELEV.		GRAPHIC	MATERIAL DESCRIPTION	AASHTO/ USCS	SAMPLE DEPTH	SAMPLE NO.	BLOW COUNT / PP/T TSF	N 60 / %RQD	REC (ft.)	REC (%)
			BITUMINOUS CONCRETE. 0.6'/El. 386.2	a-1-a / gp						
			GRAVEL, some Sand, trace Silt, dense, moist, heterogeneous, gap graded, sub-angular to angular, light gray to dark gray, fill, *subbase*. 3.0'/El. 383.8							
			CLAY, some Gravel, some Sand, little Silt, very soft to very stiff, moist, heterogeneous, high plastic fines, orange brown with black, fill. 9.0'/El. 377.8	a-6 / cl						
			CLAY, some Silt, little Sand, trace Gravel, very soft to stiff, moist, homogeneous, high plastic fines, orange brown with black, residuum.		1.5					
385					3.0	S-1	12-19-6	33	1.5	100
					4.5	S-2	4-2-3	7	0.1	7
					6.0	S-3	3-4-5	12	1.5	100
380					7.5	S-4	2-2-3 **0.25**	7	1.5	100
					9.0	S-5	3-5-7 **2.50**	16	1.5	100
					10.5	S-6	7-9-10 **2.00**	25	1.5	100
					12.0	S-7	3-3-6 **1.25**	12	1.5	100
					13.5	S-8	6-8-9 **1.25**	23	1.5	100
					15.0	S-9	6-8-7 **1.50**	20	1.5	100
375					16.5	S-10	3-5-8 **2.00**	17	1.5	100
					18.0	S-11	6-7-9 **2.25**	21	1.5	100
					19.5	S-12	8-10-8 **1.50**	24	1.5	100
370	BFE 370.00			a-6 / cl	21.0	S-13	1-1-2 **0.25**	4	1.5	100
					22.5	S-14	3-3-4 **1.00**	9	1.5	100
365					24.0	S-15	4-4-5 **1.50**	12	1.5	100
					25.5	S-16	3-3-6 **1.50**	12	1.5	100
					27.0	S-17	6-6-7 **1.50**	17	1.5	100
					28.5	S-18	1-3-5 **1.00**	11	1.5	100
360			*S-19: Spoon bent, casing refusal at 30.0'.* 30.0'/El. 356.8		30.0	S-19	4-4-3 **0.80**	9	1.5	100
	TOR 356.80 BCA 356.80		**LIMESTONE**, light gray, soft to medium hard, slightly weathered, indistinct bedding, jointed, close to medium spacing, shallow to moderate dip, tight joints.		32.0	R-1		0%	1.0	50
355					34.5	R-2		68%	2.5	100
350					39.5	R-3		80%	5.0	100
345					44.5	R-4		62%	5.0	100
340					47.0	R-5		80%	2.5	100
335			52.0'/El. 334.8			R-6		66%	5.0	100

◇ RQD % ◇ ⊙ Soil/Rock Rec. % ⊙ (20 40 60 80) ▲ SPT (N_{60}) ▲ (10 20 30 40)

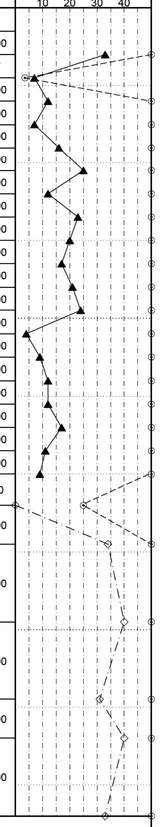

[1] 0-hr. Water: Grouted upon completion.

SUBSTRUCTURE UNIT: LOG 1 OF 1

SUBSTRUCTURE - ABUTMENT 1 AND ASSOCIATED WINGWALLS

BORING NUMBER:	BORING LOCATION	START: 12/01/2020 10:00 AM	HAMMER: AUTOMATIC
SB1-02	STATION: 36+42.0 OFFSET: 25.0 FT. RT.	FINISH: 12/01/2020 2:40 PM	EFFICIENCY: 0.8 ERa

DRILLING METHOD AND EQUIPMENT:	SIZE OF CORE:	VERTICAL SCALE:	TOP OF BORING ELEVATION:
DOUBLE TUBE WIRE LINE-NQ, AUTOMATIC, ACKER XLS TRACK MOUNT RIG	2.000 IN.	0 FT. 5 FT. [redacted]	386.2 FT.

DRILLING INSPECTOR: JEREMY COOK
DRILLER & DRILLING COMPANY: JASON GROFT
NAVARRO & WRIGHT

0 HR. READING - ELAPSED TIME: NR - NR
24 HR. READING - ELAPSED TIME: NR - NR [1]

ELEV.		GRAPHIC	MATERIAL DESCRIPTION	AASHTO/ USCS	SAMPLE DEPTH	SAMPLE NO.	BLOW COUNT / PP/T TSF	N 60 / %RQD	REC (ft.)	REC (%)
			BITUMINOUS CONCRETE. 0.7'/El. 385.5	a-1-a / gw						
			SAND and **GRAVEL**, trace Silt, medium dense, damp, homogeneous, well graded, angular, gray, fill. 2.5'/El. 383.7	a-4 / ml						
			SILT, little Sand, trace Gravel, medium dense, damp to moist, homogeneous, gray and orange brown, fill. 6.0'/El. 380.2							
			CLAY, little Sand, very stiff to hard, moist, homogeneous, sub-rounded, medium plastic fines, orange brown. 16.3'/El. 369.9	a-6 / cl						
370	BFE 370.00 TOR 369.90 BCA 369.90		**LIMESTONE**, light gray, dull luster, medium hard, slightly weathered to weathered, indistinct bedding, narrow to moderate spacing, shallow to sheer dip, open joints. 22.0'/El. 364.2		1.5	S-1	4-4-6	13	0.7	47
			CLAY, little Sand, stiff to very stiff, moist, homogeneous, sub-rounded, medium plastic fines, orange brown. 24.5'/El. 361.7	a-6 / cl	3.0	S-2	5-4-5	12	1.0	67
			LIMESTONE, light gray, dull luster, medium hard, slightly weathered to weathered, indistinct bedding, narrow to moderate spacing, shallow to sheer dip, open joints.		4.5	S-3	3-3-7	13	0.9	60
385					6.0	S-4	6-9-12 **4.25**	28	1.3	87
					7.5	S-5	13-15-14 **4.00**	39	1.2	80
					9.0	S-6	10-10-12 **2.50**	29	1.3	87
					10.5	S-7	3-4-4 **2.75**	11	1.1	73
					12.0	S-8	3-5-5 **4.00**	13	1.4	93
					13.5	S-9	4-5-5 **4.50**	13	1.4	93
					15.0	S-10	4-50/.1'	>67	0.6	100
					15.6	R-1		35%	1.3	76
					16.3	R-2		15%	1.5	38
					18.0	S-11	2-2-3 **2.00**	7	1.4	93
					22.0	S-12	3-4-50/.0' **2.25**	72	1.0	100
					23.5	R-3		0%	2.3	92
					24.5	R-4		46%	4.8	96
					27.0	R-5		42%	4.2	84
					32.0	R-6		82%	5.0	100
					37.0	R-7		80%	2.5	100
			44.5'/El. 341.7		42.0					

◇ RQD % ◇ ⊙ Soil/Rock Rec. % ⊙ (20 40 60 80) ▲ SPT (N_{60}) ▲ (10 20 30 40)

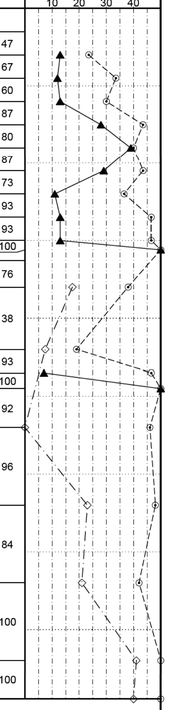

[1] 24-hr. Water: Reading not taken, driller grouted boring before a reading was taken.

GENERAL NOTES

THIS SHEET IS INCLUDED FOR THE CONVENIENCE OF THE DEPARTMENT. REFER TO PUBLICATION 408 SECTION 102.05 FOR FURTHER INFORMATION.

FOR ADDITIONAL SOIL AND ROCK DESCRIPTIONS SEE PUBLICATION 222.

THE BORING LOGS AND RELATED INFORMATION DEPICT SUBSURFACE CONDITIONS ONLY AT THE SPECIFIC LOCATIONS AND DATES INDICATED. SUBSURFACE CONDITIONS MAY DIFFER FROM THE CONDITIONS REPORTED AT THE SPECIFIC LOCATIONS. ALSO, THE PASSAGE OF TIME MAY RESULT IN A CHANGE OF CONDITIONS AT THE BORING LOCATIONS.

LEGEND

PP	POCKET PENETROMETER
T	TORVANE
NTS	NOT TO SCALE
BCA	BOTTOM OF COARSE AGGREGATE
BFE	BOTTOM OF FOOTING ELEVATION
TOR	ESTIMATED TOP OF ROCK ELEVATION

THE DESCRIPTIONS OF THE MATERIALS ENCOUNTERED HAVE BEEN VERIFIED.
ME

SR 3013 PREVIOUSLY KNOWN AS LR 22075
BMS STR ID: 22-3013-0020-0291 MPMS/ECMS PROJ: 97828 BRKEY: 67416

COMMONWEALTH OF PENNSYLVANIA
DEPARTMENT OF TRANSPORTATION

DAUPHIN COUNTY
SR 0083 SECTION 079
SEG 0020 OFFSET 0291
SR 3013 (29TH STREET) STA 37+78.24 OVER
SR 0083 & NORFOLK SOUTHERN RAILWAY COMPANY
3-SPAN CONTINUOUS COMPOSITE P/S CONCRETE
PA BULB-TEE BEAM BRIDGE
STRUCTURE BORINGS - 2

COMMONWEALTH OF PENNSYLVANIA REGISTERED PROFESSIONAL MARK T. EVANS GEOLOGIST PG005251

S - 39451

\\fileserver\SCI-NET\01Projects\36002 (SR 83, Sec 079 - River to Eisenhower)\SR 83, Sec 079\GEOTECHNICAL\CADD\WORKING FILES\TEST BORING SHEETS\B1\36002-079_TB_B1.dgn
3/4/2022 11:29:23 AM rrichards
PENNDOT STRUCTURE BORING LOG - PENNDOT_GINT_VERSION_12.2.3_5-21-2019.GDT - 5/12/21 13:20 - N:\0IPROJECTS\36002 (SR 83, SEC 079 - RIVER TO EISENHOWER)\SR 83, SEC 079\GEOTECHNICAL\FIELD DATA\LOGS\0IN TYPED LOGS\GINTS_R_0083 SEC 079_TYPED LOGS.GPJ

SUBSTRUCTURE UNIT: LOG 1 OF 1

SUBSTRUCTURE - ABUTMENT 1 AND ASSOCIATED WINGWALLS

BORING NUMBER:	BORING LOCATION	START: 12/10/2020 1:30 PM	HAMMER: AUTOMATIC
SB1-03	STATION: 36+80.0 OFFSET: 16.0 FT. LT.	FINISH: 12/11/2020 12:30 PM	EFFICIENCY: 0.8 ERa

DRILLING METHOD AND EQUIPMENT:	SIZE OF CORE:	VERTICAL SCALE:	TOP OF BORING ELEVATION:
DOUBLE TUBE WIRE LINE-NQ, AUTOMATIC, ACKER XLS TRACK MOUNT RIG	2.000 IN.	0 FT. [redacted] 5 FT.	387.9 FT.

DRILLING INSPECTOR: JEREMY COOK
DRILLER & DRILLING COMPANY: JASON GROFT
NAVARRO & WRIGHT

▽ 0 HR. READING - ELAPSED TIME: El. 354.1 ft. - 0.0 hr.
▼ 24 HR. READING - ELAPSED TIME: El. 351.9 ft. - 410.8 hr.

ELEV.	MATERIAL DESCRIPTION	AASHTO/ USCS	SAMPLE DEPTH	SAMPLE NO.	BLOW COUNT ------- PP/T TSF	N 60 / %RQD	REC (ft.)	REC (%)
	BITUMINOUS CONCRETE. 0.6'/El. 387.3							
	SAND and **GRAVEL**, some Silt, dense, damp, homogeneous, poorly graded, angular, gray, fill. 3.5'/El. 384.4	a-1-b / gm	1.5	S-1	5-6-22	37	1.0	67
	CLAY, little Sand, trace Silt, very stiff, moist, homogeneous, medium plastic fines, orange brown and black.	a-6 / cl	3.0	S-2	10-5-5	13	1.4	93
			4.5	S-3	3-3-3 **2.50**	8	0.7	47
			6.0	S-4	3-3-5 **2.50**	11	1.5	100
			7.5	S-5	5-5-8 **2.50**	17	1.3	87
			9.0	S-6	5-7-9 **2.50**	21	1.5	100
			10.5	S-7	6-9-12 **2.50**	28	1.5	100
			12.0	S-8	19-15-19 **2.50**	45	1.5	100
			13.5	S-9	14-17-20 **2.50**	49	1.3	87
385			15.0	S-10	6-6-9	20	1.4	93
380			16.5	S-11	4-9-11	27	1.3	87
375	13.5'/El. 374.4		18.0	S-12	6-9-9	24	1.2	80
	CLAY, some Sand, trace Silt, loose to very dense, moist, heterogeneous, poorly graded, angular to sub-rounded, medium plastic fines, orange brown and black.	a-6 / cl	19.5	S-13	3-5-8	17	1.4	93
			21.0	S-14	11-12-8	27	1.3	87
			22.5	S-15	9-9-12	28	1.3	87
			24.0	S-16	4-6-7	17	0.4	27
			25.5	S-17	2-5-7	16	0.4	27
			27.0	S-18	WOH-2-4	8	0.8	53
			28.5	S-19	WOR-50/.3'	>67	0.8	100
365 BFE 365.00			29.3	R-1		0%	2.1	57
360 TOR 358.60 BCA 358.60	29.3'/El. 358.6							
	LIMESTONE, blue gray, dull luster, medium hard, slightly weathered, indistinct bedding, close to medium spacing, shallow to sheer dip, narrow joint opening.		33.0	R-2		24%	4.8	96
355			38.0	R-3		76%	5.0	100
350			43.0	R-4		82%	5.0	100
345			48.0	R-5		0%	1.9	95
340	50.0'/El. 337.9							

◇ RQD % ◇ ⊙ Soil/Rock Rec. % ⊙ ▲ SPT (N_{60}) ▲

SUBSTRUCTURE UNIT: LOG 1 OF 1

SUBSTRUCTURE - ABUTMENT 1 AND ASSOCIATED WINGWALLS

BORING NUMBER:	BORING LOCATION	START: 12/02/2020 9:30 AM	HAMMER: AUTOMATIC
SB1-04	STATION: 37+00.0 OFFSET: 23.0 FT. RT.	FINISH: 12/02/2020 2:40 PM	EFFICIENCY: 0.8 ERa

DRILLING METHOD AND EQUIPMENT:	SIZE OF CORE:	VERTICAL SCALE:	TOP OF BORING ELEVATION:
DOUBLE TUBE WIRE LINE-NQ, AUTOMATIC, ACKER XLS TRACK MOUNT RIG	2.000 IN.	0 FT. [redacted] 5 FT.	388.4 FT.

DRILLING INSPECTOR: JEREMY COOK
DRILLER & DRILLING COMPANY: JASON GROFT
NAVARRO & WRIGHT

▽ 0 HR. READING - ELAPSED TIME: El. 352.3 ft. - 0.0 hr.
▼ 24 HR. READING - ELAPSED TIME: El. 352.4 ft. - 214.4 hr.

ELEV.	MATERIAL DESCRIPTION	AASHTO/ USCS	SAMPLE DEPTH	SAMPLE NO. **	BLOW COUNT ------- PP/T TSF	N 60 / %RQD	REC (ft.)	REC (%)
	BITUMINOUS CONCRETE. 0.6'/El. 387.8							
	GRAVEL and **SAND**, little Silt, dense to very dense, damp, homogeneous, well graded, angular, gray and orange brown, fill. 5.6'/El. 382.8	a-1-b / gm	1.5	S-1	8-12-12	32	0.6	40
			3.0	S-2	12-13-10	31	1.0	67
			4.5	S-3	10-8-50/.1'	77	1.0	91
	CLAY and **SILT**, little Sand, trace Gravel, stiff to very stiff, moist to wet, homogeneous, high plastic fines, orange brown, fill.	A-7-6 / CL	6.0	S-4	5-6-6	16	0.6	40
			7.5	S-5	6-8-12 **4.00**	27	1.4	93
			9.0	S-6	10-10-16 **3.50**	35	1.2	80
			10.5	S-7	5-6-7 **2.00**	17	1.5	100
			12.0	S-8	6-6-7 **2.00**	17	1.5	100
			13.5	S-9	4-7-8 **2.00**	20	1.5	100
			15.0	S-10	4-6-7 **3.25**	17	1.4	93
			16.5	S-11	3-6-6 **3.00**	16	1.4	93
			18.0	S-12	4-5-4 **2.00**	12	1.5	100
			19.5	S-13	1-1-1 **2.50**	3	0.9	60
			21.0	S-14	1-2-2 **2.25**	5	1.2	80
			22.5	S-15	2-3-5 **2.00**	11	1.0	67
			24.0	S-16	5-3-5 **2.00**	11	1.5	100
			25.5	S-17	1-2-5 **2.00**	9	1.5	100
			26.6	S-18	50/.0'	>67	0.0	0
			27.0	R-1		0%	1.2	86
			28.0	R-2		26%	3.2	64
			33.0	R-3		50%	4.8	96
			38.0	R-4		68%	5.0	100
			43.0	R-5		55%	3.8	95
385								
380								
375								
365 BFE 365.00								
	27.0'/El. 361.4							
360 TOR 361.40 BCA 361.40								
	LIMESTONE, light gray, dull luster, medium hard, slightly weathered to weathered, indistinct bedding, narrow to moderate spacing, shallow to sheer dip, open joints.							
355								
350								
345	47.0'/El. 341.4							

◇ RQD % ◇ ⊙ Soil/Rock Rec. % ⊙ ▲ SPT (N_{60}) ▲

**SAMPLE NO. shading indicates lab testing performed.

GENERAL NOTES

THIS SHEET IS INCLUDED FOR THE CONVENIENCE OF THE DEPARTMENT. REFER TO PUBLICATION 408 SECTION 102.05 FOR FURTHER INFORMATION.

FOR ADDITIONAL SOIL AND ROCK DESCRIPTIONS SEE PUBLICATION 222.

THE BORING LOGS AND RELATED INFORMATION DEPICT SUBSURFACE CONDITIONS ONLY AT THE SPECIFIC LOCATIONS AND DATES INDICATED. SUBSURFACE CONDITIONS MAY DIFFER FROM THE CONDITIONS REPORTED AT THE SPECIFIC LOCATIONS. ALSO, THE PASSAGE OF TIME MAY RESULT IN A CHANGE OF CONDITIONS AT THE BORING LOCATIONS.

LEGEND

PP	POCKET PENETROMETER
T	TORVANE
NTS	NOT TO SCALE
BCA	BOTTOM OF COARSE AGGREGATE
BFE	BOTTOM OF FOOTING ELEVATION
TOR	ESTIMATED TOP OF ROCK ELEVATION

THE DESCRIPTIONS OF THE MATERIALS ENCOUNTERED HAVE BEEN VERIFIED.
ME

SR 3013 PREVIOUSLY KNOWN AS LR 22075
BMS STR ID: 22-3013-0020-0291 MPMS/ECMS PROJ: 97828 BRKEY: 67416

COMMONWEALTH OF PENNSYLVANIA
DEPARTMENT OF TRANSPORTATION

DAUPHIN COUNTY
SR 0083 SECTION 079
SEG 0020 OFFSET 0291
SR 3013 (29TH STREET) STA 37+78.24 OVER
SR 0083 & NORFOLK SOUTHERN RAILWAY COMPANY
3-SPAN CONTINUOUS COMPOSITE P/S CONCRETE
PA BULB-TEE BEAM BRIDGE
STRUCTURE BORINGS - 3

COMMONWEALTH OF PENNSYLVANIA REGISTERED PROFESSIONAL MARK T. EVANS GEOLOGIST PG005251

S - 39451

\\fileserver\SCI-NET\01Projects\36002 (SR 83, Sec 079 - River to Eisenhower)\SR 83, Sec 079\GEOTECHNICAL\CADD\WORKING FILES\TEST BORING SHEETS\B1\36002-079_TB_B1.dgn
3/4/2022 11:29:25 AM richards
PENNDOT STRUCTURE BORING LOG - PENNDOT_GINT_VERSION_12.2.3_9-21-2016.GDT - 5/12/21 13:01 - N:\PROJECTS\36002 (SR 83, SEC 079 - RIVER TO EISENHOWER)\SR 83, SEC 079\GEOTECHNICAL\FIELD DATA\LOGS\DTX\TYPED LOGS\GINTS_R_0083_SEC_079_TYPED_LOGS.GPJ

SUBSTRUCTURE UNIT:
SUBSTRUCTURE - PIER 1

LOG 1 OF 1

BORING NUMBER:	BORING LOCATION	START: 12/10/2020 9:45 AM	HAMMER: AUTOMATIC
SB1-05	STATION: 37+69.0 OFFSET: 11.0 FT. LT.	FINISH: 12/10/2020 1:15 PM	EFFICIENCY: 0.8 ERa

DRILLING METHOD AND EQUIPMENT:	SIZE OF CORE:	VERTICAL SCALE:	TOP OF BORING ELEVATION:
DOUBLE TUBE WIRE LINE-NQ, AUTOMATIC, ACKER XLS TRACK MOUNT RIG	2.000 IN.	0 FT. 5 FT. [redacted]	391.0 FT.

DRILLING INSPECTOR: JEREMY COOK
DRILLER & DRILLING COMPANY: JASON GROFT
NAVARRO & WRIGHT

▽ 0 HR. READING - ELAPSED TIME: El. 360.5 ft. - 0.0 hr.
▼ 24 HR. READING - ELAPSED TIME: El. 354.0 ft. - 23.0 hr.

ELEV.	MATERIAL DESCRIPTION	AASHTO/ USCS	SAMPLE DEPTH
	BITUMINOUS CONCRETE. 0.6'/El. 390.4		
	SAND and fine **GRAVEL**, little Silt, trace Clay, loose to dense, damp to moist, homogeneous, well graded, angular to sub-angular, gray and tan, fill. 13.5'/El. 377.5	a-1-a / gw-gm	
	SAND, little Gravel, some Silt, loose to very dense, moist, poorly graded, sub-angular to rounded, orange brown and gray, fill. 24.0'/El. 367.0	a-1-b / sm	
TOR 367.00	**LIMESTONE**, light blue gray, mineral veins, medium hard, slightly weathered, indistinct bedding, close to medium spacing, shallow to sheer dip, narrow joint opening.		
BFE 364.25	43.0'/El. 348.0		

SAMPLE NO.	BLOW COUNT (PP/T TSF)	N 60 / %RQD	REC (ft.)	REC (%)
S-1	5-11-12	31	1.2	80
S-2	11-13-11	32	1.0	67
S-3	6-6-6	16	1.1	73
S-4	9-9-9	24	0.7	47
S-5	4-3-9	16	0.2	13
S-6	19-27-8	47	0.7	47
S-7	5-3-4	9	0.0	0
S-8	5-4-3	9	0.1	7
S-9	3-3-3	8	0.1	7
S-10	2-2-2	5	0.2	13
S-11	1-2-3	7	0.1	7
S-12	4-2-3	7	0.6	40
S-13	2-3-4	9	0.4	27
S-14	3-3-3	8	0.3	20
S-15	1-50/.3'	>67	0.4	50
S-16	50/.0'	>67	0.0	0
R-1		0%	1.9	48
R-2		62%	4.7	94
R-3		62%	5.0	100
R-4		72%	5.0	100

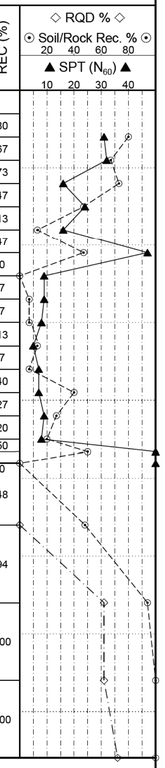

SUBSTRUCTURE UNIT:
SUBSTRUCTURE - PIER 1

LOG 1 OF 1

BORING NUMBER:	BORING LOCATION	START: 12/03/2020 9:30 AM	HAMMER: AUTOMATIC
SB1-06	STATION: 37+67.0 OFFSET: 20.0 FT. RT.	FINISH: 12/03/2020 1:30 PM	EFFICIENCY: 0.8 ERa

DRILLING METHOD AND EQUIPMENT:	SIZE OF CORE:	VERTICAL SCALE:	TOP OF BORING ELEVATION:
DOUBLE TUBE WIRE LINE-NQ, AUTOMATIC, ACKER XLS TRACK MOUNT RIG	2.000 IN.	0 FT. 5 FT. [redacted]	391.5 FT.

DRILLING INSPECTOR: JEREMY COOK
DRILLER & DRILLING COMPANY: JASON GROFT
NAVARRO & WRIGHT

▽ 0 HR. READING - ELAPSED TIME: El. 364.2 ft. - 0.0 hr.
▼ 24 HR. READING - ELAPSED TIME: Dry - 191.8 hr.

ELEV.	MATERIAL DESCRIPTION	AASHTO/ USCS	SAMPLE DEPTH
	BITUMINOUS CONCRETE. 0.7'/El. 390.8		
	GRAVEL, some Sand, little Silt, trace Clay, loose to very dense, moist, heterogeneous, well graded, angular, gray and orange brown, fill. 20.5'/El. 371.0	A-1-b / SM	
TOR 371.00	**LIMESTONE**, light gray, dull luster, medium hard to hard, weathered to moderately weathered, indistinct bedding, narrow to medium spacing, shallow to sheer dip, open joints.		
BFE 364.25	40.5'/El. 351.0		

SAMPLE NO.**	BLOW COUNT (PP/T TSF)	N 60 / %RQD	REC (ft.)	REC (%)
S-1	9-9-11	27	1.1	73
S-2	9-12-7	25	1.3	87
S-3	6-7-5	16	1.0	67
S-4	7-6-9	20	0.8	53
S-5	5-4-8	16	0.7	47
S-6	7-7-5	16	0.7	47
S-7	6-7-7	19	0.7	47
S-8	6-6-8	19	1.1	73
S-9	8-8-7	20	1.3	87
S-10	5-3-4	9	0.7	47
S-11	2-3-4	9	0.1	7
S-12	3-4-4	11	0.1	7
S-13	2-50/.1'	>67	0.1	17
R-1		52%	2.4	96
R-2		80%	3.0	100
R-3		64%	4.9	98
R-4		46%	5.0	100
R-5		71%	4.2	93

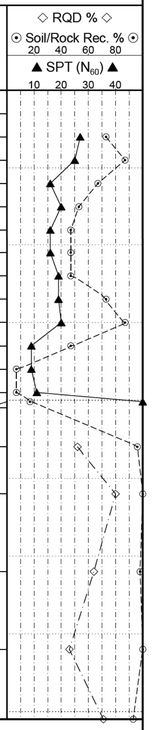

**SAMPLE NO. shading indicates lab testing performed.

GENERAL NOTES

THIS SHEET IS INCLUDED FOR THE CONVENIENCE OF THE DEPARTMENT. REFER TO PUBLICATION 408 SECTION 102.05 FOR FURTHER INFORMATION.

FOR ADDITIONAL SOIL AND ROCK DESCRIPTIONS SEE PUBLICATION 222.

THE BORING LOGS AND RELATED INFORMATION DEPICT SUBSURFACE CONDITIONS ONLY AT THE SPECIFIC LOCATIONS AND DATES INDICATED. SUBSURFACE CONDITIONS MAY DIFFER FROM THE CONDITIONS REPORTED AT THE SPECIFIC LOCATIONS. ALSO, THE PASSAGE OF TIME MAY RESULT IN A CHANGE OF CONDITIONS AT THE BORING LOCATIONS.

LEGEND

PP	POCKET PENETROMETER
T	TORVANE
NTS	NOT TO SCALE
BCA	BOTTOM OF COARSE AGGREGATE
BFE	BOTTOM OF FOOTING ELEVATION
TOR	ESTIMATED TOP OF ROCK ELEVATION

THE DESCRIPTIONS OF THE MATERIALS ENCOUNTERED HAVE BEEN VERIFIED.
ME

SR 3013 PREVIOUSLY KNOWN AS LR 22075
BMS STR ID: 22-3013-0020-0291 MPMS/ECMS PROJ: 97828 BRKEY: 67416

COMMONWEALTH OF PENNSYLVANIA
DEPARTMENT OF TRANSPORTATION

DAUPHIN COUNTY
SR 0083 SECTION 079
SEG 0020 OFFSET 0291
SR 3013 (29TH STREET) STA 37+78.24 OVER
SR 0083 & NORFOLK SOUTHERN RAILWAY COMPANY
3-SPAN CONTINUOUS COMPOSITE P/S CONCRETE
PA BULB-TEE BEAM BRIDGE
STRUCTURE BORINGS - 4

COMMONWEALTH OF PENNSYLVANIA
REGISTERED PROFESSIONAL
MARK T. EVANS
GEOLOGIST
PG005251

S - 39451

\\fileserver\SCI-NET\DIProjects\36002 (SR 83, Sec 079 - River to Eisenhower)\SR 83, Sec 079\GEOTECHNICAL\CADD\WORKING FILES\TEST BORING SHEETS\B1\36002-079_TB_B1.dgn
3/4/2022 11:29:27 AM rrichards
PENNDOT STRUCTURE BORING LOG_PENNDOT_CONT_VERSION_12.2.3_9-21-2016.GDT - 3/1/2021 13:01 - N:\DIPROJECTS\36002\SR 83_SEC 079 - RIVER TO EISENHOWER\B1\TEST BORING SHEETS\36002-079_TYPED LOGS.GPJ

SUBSTRUCTURE UNIT:
SUBSTRUCTURE - PIER 2

LOG 1 OF 1

BORING NUMBER:	BORING LOCATION	START: 12/07/2020 10:00 AM	HAMMER: AUTOMATIC
SB1-07	STATION: 38+79.0 OFFSET: 10.0 FT. LT.	FINISH: 12/07/2020 2:40 PM	EFFICIENCY: 0.8 ERa

DRILLING METHOD AND EQUIPMENT:	SIZE OF CORE:	VERTICAL SCALE:	TOP OF BORING ELEVATION:
DOUBLE TUBE WIRE LINE-NQ, AUTOMATIC, ACKER XLS TRACK MOUNT RIG	2.000 IN.	0 FT. 5 FT. [redacted]	396.1 FT.

DRILLING INSPECTOR: JEREMY COOK
DRILLER & DRILLING COMPANY: JASON GROFT
NAVARRO & WRIGHT

▽ 0 HR. READING - ELAPSED TIME: El. 364.0 ft. - 0.0 hr.
▼ 24 HR. READING - ELAPSED TIME: El. 352.4 ft. - 93.0 hr.

ELEV.	MATERIAL DESCRIPTION	AASHTO/ USCS	SAMPLE DEPTH	SAMPLE NO.**	BLOW COUNT PP/T TSF	N 60 / %RQD	REC (ft.)	REC (%)
	BITUMINOUS CONCRETE. 0.6'/El. 395.5							
	SAND and **GRAVEL**, little Silt, loose to dense, damp, homogeneous, well graded, angular to sub-angular, gray and black, fill. 12.0'/El. 384.1	a-1-b / gm	1.5					
			3.0	S-1	12-12-11	31	1.2	80
			4.5	S-2	9-6-8	19	1.3	87
			6.0	S-3	7-5-4	12	0.9	60
			7.5	S-4	5-5-6	15	0.8	53
			9.0	S-5	4-4-5	12	0.7	47
			10.5	S-6	5-3-2	7	0.2	13
	SILT and **CLAY**, trace Sand, trace Gravel, medium to very stiff, moist, heterogeneous, poorly graded, angular to sub-angular, medium plastic fines, light orange brown and dark orange brown, fill.	A-6 / CL	12.0	S-7	1-2-2	5	0.1	7
			13.5	S-8	WOH-2-1	4	0.3	20
			15.0	S-9	WOH-1-3	5	0.3	20
			16.5	S-10	1-2-2	5	0.5	33
			18.0	S-11	2-3-2 **1.00**	7	0.4	27
			19.5	S-12	2-3-4	9	1.4	93
			21.0	S-13	3-4-4 **2.75**	11	1.1	73
			22.5	S-14	3-5-5 **3.00**	13	1.0	67
			24.0	S-15	3-7-9 **3.75**	21	1.4	93
			25.5	S-16	5-7-8 **3.50**	20	1.0	67
			27.0	S-17	7-10-10 **3.50**	27	1.4	93
TOR 367.90	28.2'/El. 367.9 *Spooned past pinnacle. S-18: Depth = 27.0'-28.5', Rec = 1.4', Blows = 4-7-12, PPT = 1.75. S-19: Depth = 28.5'-30.0', Rec = 1.4', Blows = 9-12-12; PPT = 2.75, S-20: Depth = 30.0'-31.5', Rec = 0.6, Blows = 5-5-10.*		28.2	R-1		16%	1.4	37
BFE 363.00	**LIMESTONE**, light gray to blue gray, mineral veins, medium hard to hard, slightly weathered to weathered, indistinct bedding, close to medium spacing, shallow to very steep dip, open joints.		32.0	R-2		44%	5.0	100
			37.0	R-3		14%	3.2	64
			42.0	R-4		66%	5.0	100
	52.0'/El. 344.1		47.0	R-5		26%	5.0	100

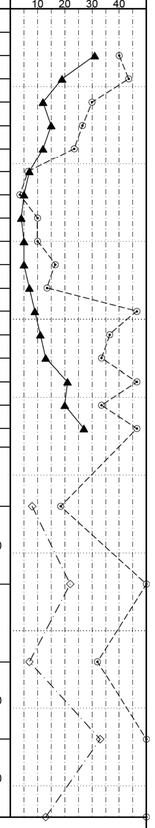

**SAMPLE NO. shading indicates lab testing performed.

SUBSTRUCTURE UNIT:
SUBSTRUCTURE - PIER 2

LOG 1 OF 1

BORING NUMBER:	BORING LOCATION	START: 12/03/2020 1:55 PM	HAMMER: AUTOMATIC
SB1-08	STATION: 38+77.0 OFFSET: 20.0 FT. RT.	FINISH: 12/04/2020 12:00 PM	EFFICIENCY: 0.8 ERa

DRILLING METHOD AND EQUIPMENT:	SIZE OF CORE:	VERTICAL SCALE:	TOP OF BORING ELEVATION:
DOUBLE TUBE WIRE LINE-NQ, AUTOMATIC, ACKER XLS TRACK MOUNT RIG	2.000 IN.	0 FT. 5 FT. [redacted]	396.2 FT.

DRILLING INSPECTOR: JEREMY COOK
DRILLER & DRILLING COMPANY: JASON GROFT
NAVARRO & WRIGHT

▽ 0 HR. READING - ELAPSED TIME: El. 358.8 ft. - 0.0 hr.
▼ 24 HR. READING - ELAPSED TIME: El. 362.5 ft. - 169.3 hr.

ELEV.	MATERIAL DESCRIPTION	AASHTO/ USCS	SAMPLE DEPTH	SAMPLE NO.	BLOW COUNT PP/T TSF	N 60 / %RQD	REC (ft.)	REC (%)
	BITUMINOUS CONCRETE. 0.6'/El. 395.6							
	SAND and **GRAVEL**, trace Silt, very loose to very dense, damp, homogeneous, well graded, angular, gray, fill. 10.5'/El. 385.7	a-1-a / gw	1.5	S-1	19-20-21	55	1.2	80
			3.0	S-2	19-13-12	33	1.1	73
			4.5	S-3	13-6-7	17	0.6	40
			6.0	S-4	3-3-3	8	0.2	13
			7.5	S-5	4-1-2	4	0.4	27
			9.0	S-6	3-2-2	5	0.4	27
	CLAY, little Sand, trace Silt, trace Gravel, medium to very stiff, moist, heterogeneous, poorly graded, angular to sub-rounded, medium plastic fines, gray and orange brown, fill. 18.0'/El. 378.2	a-6 / cl	10.5	S-7	WOH-2-4	8	0.4	27
			12.0	S-8	WOH-1-5 **0.75**	8	0.3	20
			13.5	S-9	WOH-2-2 **2.25**	5	0.4	27
			15.0	S-10	1-2-1 **1.00**	4	1.1	73
			16.5	S-11	WOH-1-5 **0.75**	8	1.4	93
	SILT, little Sand, trace Clay, stiff, moist, homogeneous, poorly graded, low plastic fines, dark brown, fill. 19.5'/El. 376.7	a-2-4 / ml	18.0	S-12	WOH-3-3 **2.00**	8	1.0	67
	CLAY, little Sand, stiff to very stiff, moist to wet, homogeneous, medium plastic fines, orange brown. 27.0'/El. 369.2	a-6 / cl	19.5	S-13	1-1-2 **1.25**	4	0.9	60
			21.0	S-14	1-3-3 **1.50**	8	1.4	93
			22.5	S-15	1-3-6 **1.75**	12	1.3	87
			24.0	S-16	5-8-9 **3.50**	23	1.4	93
			25.5	S-17	5-8-12	27	1.5	100
TOR 369.20	**LIMESTONE**, light gray, dull luster, weathered to slightly weathered, indistinct bedding, narrow to wide spacing, flat to sheer dip, narrow joint opening.		27.0	S-18	50/.0'	>67	0.0	0
			27.0	R-1		47%	2.4	81
BFE 363.00			30.0	R-2		57%	2.8	93
			33.0	R-3		84%	4.7	94
			38.0	R-4		68%	4.6	92
	48.0'/El. 348.2		43.0	R-5		50%	4.4	88

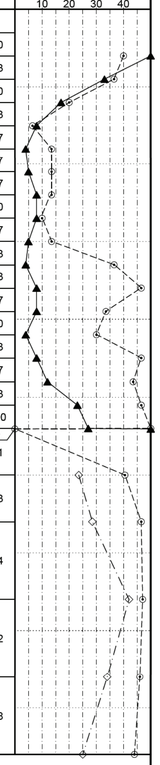

GENERAL NOTES

THIS SHEET IS INCLUDED FOR THE CONVENIENCE OF THE DEPARTMENT. REFER TO PUBLICATION 408 SECTION 102.05 FOR FURTHER INFORMATION.

FOR ADDITIONAL SOIL AND ROCK DESCRIPTIONS SEE PUBLICATION 222.

THE BORING LOGS AND RELATED INFORMATION DEPICT SUBSURFACE CONDITIONS ONLY AT THE SPECIFIC LOCATIONS AND DATES INDICATED. SUBSURFACE CONDITIONS MAY DIFFER FROM THE CONDITIONS REPORTED AT THE SPECIFIC LOCATIONS. ALSO, THE PASSAGE OF TIME MAY RESULT IN A CHANGE OF CONDITIONS AT THE BORING LOCATIONS.

LEGEND

PP	POCKET PENETROMETER
T	TORVANE
NTS	NOT TO SCALE
BCA	BOTTOM OF COARSE AGGREGATE
BFE	BOTTOM OF FOOTING ELEVATION
TOR	ESTIMATED TOP OF ROCK ELEVATION

THE DESCRIPTIONS OF THE MATERIALS ENCOUNTERED HAVE BEEN VERIFIED.
ME

SR 3013 PREVIOUSLY KNOWN AS LR 22075
BMS STR ID: 22-3013-0020-0291 MPMS/ECMS PROJ: 97828 BRKEY: 67416

COMMONWEALTH OF PENNSYLVANIA
DEPARTMENT OF TRANSPORTATION

DAUPHIN COUNTY
SR 0083 SECTION 079
SEG 0020 OFFSET 0291
SR 3013 (29TH STREET) STA 37+78.24 OVER
SR 0083 & NORFOLK SOUTHERN RAILWAY COMPANY
3-SPAN CONTINUOUS COMPOSITE P/S CONCRETE
PA BULB-TEE BEAM BRIDGE
STRUCTURE BORINGS - 5

COMMONWEALTH OF PENNSYLVANIA REGISTERED PROFESSIONAL MARK T. EVANS GEOLOGIST PG005251

SHEET 90 OF 93

S - 39451

PENNDOT STRUCTURE BORING LOG - PENNDOT_GINT_VERSION_12.2.3 9-21-2016.GDT - 5/12/21 13:01 - N:\PROJECTS\36002 (SR 83, SEC 079 - RIVER TO EISENHOWER)\B_SEC 079\RIVER TO EISENHOWER B_SEC 079\GEOTECHNICAL\FIELD DATA\LOGS\DWG\TYPED LOGS\GINTS\B_0083 SEC 079 TYPED LOGS.GPJ
PENNDOT STRUCTURE BORING LOG - PENNDOT_GINT_VERSION_12.2.3 9-21-2016.GDT - 5/12/21 13:01 - N:\PROJECTS\36002 (SR 83, SEC 079 - RIVER TO EISENHOWER)\B_SEC 079\RIVER TO EISENHOWER B_SEC 079\GEOTECHNICAL\FIELD DATA\LOGS\DWG\TYPED LOGS\GINTS\B_0083 SEC 079 TYPED LOGS.GPJ
\\fileserver\SCI-NET\01Projects\36002 (SR 83, Sec 079 - River to Eisenhower)\SR 83, Sec 079\GEOTECHNICAL\CADD\WORKING FILES\TEST BORING SHEETS\B1\36002-079_TB.B1.dgn
3/4/2022 11:29:29 AM rrichards

SUBSTRUCTURE UNIT: LOG 1 OF 1

SUBSTRUCTURE - ABUTMENT 2 AND ASSOCIATED WINGWALLS

BORING NUMBER:	BORING LOCATION	START: 12/09/2020 9:30 AM	HAMMER: AUTOMATIC
SB1-11	STATION: 40+11.0 OFFSET: 13.0 FT. LT.	FINISH: 12/09/2020 3:35 PM	EFFICIENCY: 0.8 ERa

DRILLING METHOD AND EQUIPMENT:	SIZE OF CORE:	VERTICAL SCALE:	TOP OF BORING ELEVATION:
DOUBLE TUBE WIRE LINE-NQ, AUTOMATIC, ACKER XLS TRACK MOUNT RIG	2.000 IN.	0 FT. 5 FT. [redacted]	399.5 FT.

DRILLING INSPECTOR: JEREMY COOK
DRILLER & DRILLING COMPANY: JASON GROFT
NAVARRO & WRIGHT

▽ 0 HR. READING - ELAPSED TIME: El. 352.5 ft. - 0.0 hr.
▼ 24 HR. READING - ELAPSED TIME: El. 351.6 ft. - 42.4 hr.

ELEV.	MATERIAL DESCRIPTION	AASHTO/ USCS	SAMPLE DEPTH	SAMPLE NO.	BLOW COUNT ------- PP/T TSF	N 60 / %RQD	REC (ft.)	REC (%)
	BITUMINOUS CONCRETE. 0.6'/El. 398.9		1.5					
	GRAVEL and **SAND**, little Silt, medium dense to dense, damp, homogeneous, well graded, angular, gray, fill. 4.0'/El. 395.5	a-1-b / gm	3.0	S-1	10-15-10	33	1.4	93
			4.5	S-2	9-9-11	27	1.4	93
	SAND, some Silt, little Gravel, loose to very dense, dry to moist, homogeneous, poorly graded, angular to sub-angular, tan and orange brown, fill.	a-1-b / sm	6.0	S-3	5-4-4	11	1.1	73
			7.5	S-4	5-4-4	11	1.1	73
			9.0	S-5	5-5-9	19	1.3	87
			10.5	S-6	8-6-27	44	1.2	80
			12.0	S-7	30-21-41	83	0.3	20
			13.5	S-8	33-27-26	71	1.1	73
			15.0	S-9	17-11-10	28	1.0	67
			16.5	S-10	8-3-4	9	0.7	47
			18.0	S-11	3-3-4	9	0.9	60
			19.5	S-12	3-4-8	16	1.2	80
			21.0	S-13	6-6-7	17	1.3	87
			22.5	S-14	3-3-4	9	1.0	67
			24.0	S-15	5-11-16	36	1.1	73
			25.5	S-16	5-6-9	20	1.3	87
			27.0	S-17	6-9-16	33	1.0	67
	27.0'/El. 372.5		28.5	S-18	9-14-20	45	1.5	100
	CLAY, little Sand, trace Silt, very stiff, moist, homogeneous, medium plastic fines, orange brown, fill.	a-6 / cl	30.0	S-19	16-17-23	53	1.3	87
			31.5	S-20	16-17-20	49	1.3	87
			33.0	S-21	4-6-7 3.50	17	1.2	80
			34.5	S-22	9-9-11 3.50	27	1.0	67
			36.0	S-23	9-6-8	19	1.1	73
	37.0'/El. 362.5		37.0	S-24	6-18-50/.0' 2.50	91	1.0	100
	LIMESTONE, light blue gray, mineral veins, medium hard, slightly weathered to weathered, indistinct bedding, close to medium spacing, shallow to very steep dip, open joints.		42.0	R-1		48%	4.4	88
			47.0	R-2		64%	3.8	76
			52.0	R-3		30%	3.3	66
			57.0	R-4		44%	2.7	54
				R-5		76%	4.5	90
	62.0'/El. 337.5							

BFE 370.25
BCA 368.25
TOR 362.50

◇ RQD % ◇
⊙ Soil/Rock Rec. % ⊙ (20 40 60 80)
▲ SPT (N_{60}) ▲ (10 20 30 40)

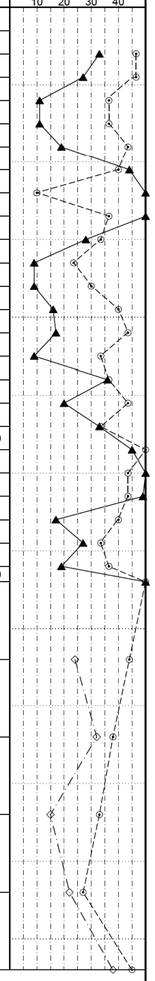

SUBSTRUCTURE UNIT: LOG 1 OF 2

SUBSTRUCTURE - ABUTMENT 2 AND ASSOCIATED WINGWALLS

BORING NUMBER:	BORING LOCATION	START: 12/08/2020 9:00 AM	HAMMER: AUTOMATIC
SB1-12	STATION: 40+12.5 OFFSET: 20.0 FT. RT.	FINISH: 12/08/2020 4:15 PM	EFFICIENCY: 0.8 ERa

DRILLING METHOD AND EQUIPMENT:	SIZE OF CORE:	VERTICAL SCALE:	TOP OF BORING ELEVATION:
DOUBLE TUBE WIRE LINE-NQ, AUTOMATIC, ACKER XLS TRACK MOUNT RIG	2.000 IN.	0 FT. 5 FT. [redacted]	398.8 FT.

DRILLING INSPECTOR: JEREMY COOK
DRILLER & DRILLING COMPANY: JASON GROFT
NAVARRO & WRIGHT

▽ 0 HR. READING - ELAPSED TIME: El. 367.6 ft. - 0.0 hr.
▼ 24 HR. READING - ELAPSED TIME: El. 350.8 ft. - 69.2 hr.

ELEV.	MATERIAL DESCRIPTION	AASHTO/ USCS	SAMPLE DEPTH	SAMPLE NO. **	BLOW COUNT ------- PP/T TSF	N 60 / %RQD	REC (ft.)	REC (%)
	BITUMINOUS CONCRETE. 0.6'/El. 398.2		1.5					
	SAND and **GRAVEL**, little Silt, medium dense, damp, homogeneous, well graded, angular to sub-angular, dark gray and light gray, fill. 4.0'/El. 394.8	a-1-b / gm	3.0	S-1	12-13-11	32	1.2	80
			4.5	S-2	8-7-7	19	1.5	100
	SILT, some Sand, little Gravel, medium dense to very dense, dry to moist, heterogeneous, poorly graded, angular, tan and orange brown, fill.	a-1-b / sm	6.0	S-3	9-9-7	21	1.4	93
			7.5	S-4	5-6-8	19	1.3	87
			9.0	S-5	9-11-12	31	1.4	93
			10.5	S-6	11-6-10	21	1.2	80
			11.0	S-7	23-50/.0'	>67	0.4	80
	12.0'/El. 386.8		12.0	S-8	50/.0'	>67	0.0	0
	CEMENT CONCRETE. 13.0'/El. 385.8		12.0	R-1		60%	1.0	66
	SILT and **CLAY**, little Sand, trace Gravel, medium dense to dense, moist, homogeneous, poorly graded, angular to sub-angular, low plastic fines, orange brown and tan, fill.	A-7-6 / CL	13.5	S-9	4-6-5	15	1.1	73
			15.0	S-10	5-3-6	12	0.7	47
			16.5	S-11	3-5-3	11	1.0	67
			18.0	S-12	3-6-4	13	1.0	67
			19.5	S-13	4-3-5	11	1.1	73
			21.0	S-14	3-4-4	11	1.4	93
			22.5	S-15	4-7-9	21	1.3	87
			24.0	S-16	6-7-19	35	1.3	87
			25.5	S-17	5-10-13	31	1.2	80
			27.0	S-18	8-13-14	36	1.3	87
			28.5	S-19	12-15-17	43	1.4	93
			30.0	S-20	9-10-12	29	1.2	80
			31.5	S-21	4-8-9	23	1.4	93
			33.0	S-22	8-8-10	24	1.3	87
			34.5	S-23	6-8-14 3.50	29	1.5	100
	30.0'/El. 368.8		36.0	S-24	5-8-10 2.50	24	1.5	100
	CLAY and **SILT**, trace Sand, trace Gravel, very stiff, damp, homogeneous, low plastic fines, orange brown.	A-7-6 / CL	37.5	S-25	50/.0'	>67	0.0	0
			42.0	R-2		43%	4.3	96
			47.0	R-3		22%	2.5	50
			52.0	R-4		0%	2.5	50
			57.0	R-5		52%	4.9	98
	37.5'/El. 361.3			R-6		34%	4.1	82
	LIMESTONE, light gray to blue gray, mineral veins, medium hard, slightly weathered to highly weathered, indistinct bedding, close to wide spacing, shallow to very steep dip, open joints.							
	62.0'/El. 336.8							

BFE 370.25
BCA 368.25
TOR 361.30

◇ RQD % ◇
⊙ Soil/Rock Rec. % ⊙ (20 40 60 80)
▲ SPT (N_{60}) ▲ (10 20 30 40)

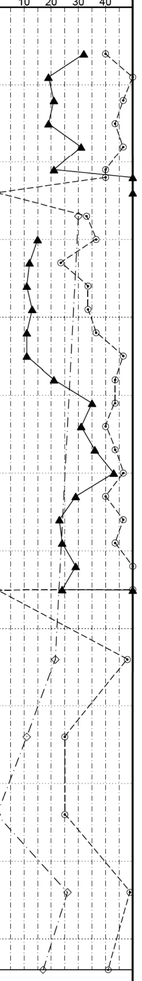

GENERAL NOTES

THIS SHEET IS INCLUDED FOR THE CONVENIENCE OF THE DEPARTMENT. REFER TO PUBLICATION 408 SECTION 102.05 FOR FURTHER INFORMATION.

FOR ADDITIONAL SOIL AND ROCK DESCRIPTIONS SEE PUBLICATION 222.

THE BORING LOGS AND RELATED INFORMATION DEPICT SUBSURFACE CONDITIONS ONLY AT THE SPECIFIC LOCATIONS AND DATES INDICATED. SUBSURFACE CONDITIONS MAY DIFFER FROM THE CONDITIONS REPORTED AT THE SPECIFIC LOCATIONS. ALSO, THE PASSAGE OF TIME MAY RESULT IN A CHANGE OF CONDITIONS AT THE BORING LOCATIONS.

LEGEND

PP	POCKET PENETROMETER
T	TORVANE
NTS	NOT TO SCALE
BCA	BOTTOM OF COARSE AGGREGATE
BFE	BOTTOM OF FOOTING ELEVATION
TOR	ESTIMATED TOP OF ROCK ELEVATION

THE DESCRIPTIONS OF THE MATERIALS ENCOUNTERED HAVE BEEN VERIFIED.
ME

SR 3013 PREVIOUSLY KNOWN AS LR 22075
BMS STR ID: 22-3013-0020-0291 MPMS/ECMS PROJ: 97828 BRKEY: 67416

COMMONWEALTH OF PENNSYLVANIA
DEPARTMENT OF TRANSPORTATION

DAUPHIN COUNTY
SR 0083 SECTION 079
SEG 0020 OFFSET 0291
SR 3013 (29TH STREET) STA 37+78.24 OVER
SR 0083 & NORFOLK SOUTHERN RAILWAY COMPANY
3-SPAN CONTINUOUS COMPOSITE P/S CONCRETE
PA BULB-TEE BEAM BRIDGE
STRUCTURE BORINGS - 6

COMMONWEALTH OF PENNSYLVANIA REGISTERED PROFESSIONAL MARK T. EVANS GEOLOGIST PG005251

S - 39451

PENNDOT STRUCTURE BORING LOG - PENNDOT GINT VERSION 12.23 9-21-2016 GDT - 5/12/21 13:02 - N:\PROJECTS\36002 (SR 83, SEC 079) - RIVER TO EISENHOWER\B1, SEC 079\GEOTECHNICAL\FIELD DATA\LOGS\TYPED LOGS\GINTS R 0083 SEC 079 TYPED LOGS.GPJ
\\fileserver\SCI-NET\01Projects\36002 (SR 83, Sec 079 - River to Eisenhower)\SR 83, Sec 079\GEOTECHNICAL\CADD\WORKING FILES\TEST BORING SHEETS\B1\36002-079_TB.B1.dgn
3/4/2022 11:29:31 AM rrichards

LABORATORY TEST SUMMARY - SOILS

BORING NUMBER	STATION & OFFSET	SAMPLE #	TEST DEPTH (FT.)	NATURAL MOISTURE %	% GRAIN SIZE DISTRIBUTION (AASHTO) GRAVEL %	SAND %	COARSE SAND %	FINE SAND %	FINES %	SILT %	CLAY %	CLASSIFICATION AASHTO	USCS	S.G.	PLASTICITY PARAMETERS LIQUID LIMIT	PLASTIC LIMIT	P. I.	SHEAR STRENGTH C (TSF)	Φ (DEG.)	C' (TSF)	Φ' (DEG)	TEST METHOD
SB1-04	37+00.0 23 ft. RT.	S-11 to 15	16.5 to 24.0	30.7	2.7	10.1	4.3	5.8	87.2	40.8	46.3	A-7-6	CL		49	25	24					
SB1-06	37+67.0 20 ft. RT.	S-5 to 9	7.5 to 15.0	9.9	48.5	32.0	19.5	12.6	19.3	14.4	4.9	A-1-b	SM									
SB1-07	38+79.0 10 ft. LT.	S-12 to 16	18.0 to 25.5	21.6	1.6	8.9	3.1	5.8	89.5	51.1	38.5	A-6	CL		39	20	19					
SB1-12	40+12.5 20 ft. RT.	S-15 to 19	22.5 to 30.0	20.2	3.0	15.7	7.4	8.3	81.4	43.0	38.3	A-7-6	CL		41	22	19					
SB1-12	40+12.5 20 ft. RT.	S-20 to 24	30.0 to 37.5	28.8	0.6	6.8	2.5	4.3	92.7	41.8	50.9	A-7-6	CL		47	24	23	0.235	24.5			DIR. SHR.-CD

LABORATORY TEST SUMMARY - ELECTROCHEMICAL

BORING NUMBER	STATION & OFFSET	SAMPLE #	TEST DEPTH (FT.)	SAMPLE SOURCE	pH	MINIMUM RESISTIVITY (ohm-cm)	CHLORIDE CONTENT (ppm)	SULFATE CONTENT (ppm)	HIGH ORGANIC CONTENT?	CORROSIVE FOR CONCRETE?	CORROSIVE FOR STEEL?
SB1-04	37+00.0 23 ft. RT.	S-11 to 15	16.5 to 24.0	GROUNDWATER SOIL	5.3	2,821	394	22	No	No No	No pH,Resist.w/Chlor.
SB1-06	37+67.0 20 ft. RT.	S-5 to 9	7.5 to 15.0	GROUNDWATER SOIL	7.9	3,818	105	18	No	No No	No Resist.w/Chlor.
SB1-07	38+79.0 10 ft. LT.	S-12 to 16	18.0 to 25.5	GROUNDWATER SOIL	6.0	2,505	701	275	No	No No	No Resist.w/Sulf.,Resist.w/Chlor.
SB1-12	40+12.5 20 ft. RT.	S-15 to 19	22.5 to 30.0	GROUNDWATER SOIL	6.3	2,631	615	14	No	No No	No Resist.w/Chlor.

GENERAL NOTES

THIS SHEET IS INCLUDED FOR THE CONVENIENCE OF THE DEPARTMENT. REFER TO PUBLICATION 408 SECTION 102.05 FOR FURTHER INFORMATION.

FOR ADDITIONAL SOIL AND ROCK DESCRIPTIONS SEE PUBLICATION 222.

THE BORING LOGS AND RELATED INFORMATION DEPICT SUBSURFACE CONDITIONS ONLY AT THE SPECIFIC LOCATIONS AND DATES INDICATED. SUBSURFACE CONDITIONS MAY DIFFER FROM THE CONDITIONS REPORTED AT THE SPECIFIC LOCATIONS. ALSO, THE PASSAGE OF TIME MAY RESULT IN A CHANGE OF CONDITIONS AT THE BORING LOCATIONS.

LEGEND

PP	POCKET PENETROMETER
T	TORVANE
NTS	NOT TO SCALE
BCA	BOTTOM OF COARSE AGGREGATE
BFE	BOTTOM OF FOOTING ELEVATION
TOR	ESTIMATED TOP OF ROCK ELEVATION

THE DESCRIPTIONS OF the MATERIALS ENCOUNTERED HAVE BEEN VERIFIED.
ME

SR 3013 PREVIOUSLY KNOWN AS LR 22075
BMS STR ID: 22-3013-0020-0291 MPMS/ECMS PROJ: 97828 BRKEY: 67416

COMMONWEALTH OF PENNSYLVANIA
DEPARTMENT OF TRANSPORTATION

DAUPHIN COUNTY
SR 0083 SECTION 079
SEG 0020 OFFSET 0291
SR 3013 (29TH STREET) STA 37+78.24 OVER
SR 0083 & NORFOLK SOUTHERN RAILWAY COMPANY
3-SPAN CONTINUOUS COMPOSITE P/S CONCRETE
PA BULB-TEE BEAM BRIDGE
STRUCTURE BORINGS - 7

COMMONWEALTH OF PENNSYLVANIA REGISTERED PROFESSIONAL MARK T. EVANS GEOLOGIST PG005251

S - 39451

\\fileserver\SCI-NET\QIProjects\36002 (SR 83, Sec 079 - River to Eisenhower)\SR 83, Sec 079\GEOTECHNICAL\CADD\WORKING FILES\TEST BORING SHEETS\B1\36002-079_TB_B1.dgn
3/4/2022 11:29:34 AM rrichards

LABORATORY TEST SUMMARY - ROCK CORE

BORING NUMBER	STATION & OFFSET	SAMPLE #	TEST DEPTH (FT.)	TEST	STRENGTH	JAR SLAKE TEST PERFORMED?	SLAKE DURABILITY INDEX & TYPE	ROCK RECOVERY %	RQD %	BEDROCK LITHOLOGY	STRATIGRAPHIC UNIT
SB1-02	36+42.0 25 ft. RT.	R-2	18.0 to 18.6	UNCONFINED COMPRESSIVE TEST	14910.3 PSI / 1,073.5 TSF	NO		38	15	LIMESTONE	
SB1-02	36+42.0 25 ft. RT.	R-4	27.0 to 27.7	UNCONFINED COMPRESSIVE TEST	12698.6 PSI / 914.3 TSF	NO		96	46	LIMESTONE	
SB1-03	36+80.0 16 ft. LT.	R-2	35.5 to 36.0	UNCONFINED COMPRESSIVE TEST	16568.0 PSI / 1,192.9 TSF	NO		96	24	LIMESTONE	
SB1-03	36+80.0 16 ft. LT.	R-3	38.0 to 38.7	UNCONFINED COMPRESSIVE TEST	10265.6 PSI / 739.1 TSF	NO		100	76	LIMESTONE	
SB1-04	37+00.0 23 ft. RT.	R-2	32.4 to 33.0	UNCONFINED COMPRESSIVE TEST	16625.1 PSI / 1,197.0 TSF	NO		64	26	LIMESTONE	
SB1-04	37+00.0 23 ft. RT.	R-3	37.5 to 38.0	UNCONFINED COMPRESSIVE TEST	10866.9 PSI / 782.4 TSF	NO		96	50	LIMESTONE	
SB1-05	37+69.0 11 ft. LT.	R-2	29.0 to 29.5	UNCONFINED COMPRESSIVE TEST	11240.0 PSI / 809.3 TSF	NO		94	62	LIMESTONE	
SB1-05	37+69.0 11 ft. LT.	R-2	29.5 to 30.0	UNCONFINED COMPRESSIVE TEST	13546.3 PSI / 975.3 TSF	NO		94	62	LIMESTONE	
SB1-06	37+67.0 20 ft. RT.	R-3	26.0 to 27.0	UNCONFINED COMPRESSIVE TEST	15290.3 PSI / 1,100.9 TSF	NO		98	64	LIMESTONE	
SB1-06	37+67.0 20 ft. RT.	R-4	31.2 to 31.9	UNCONFINED COMPRESSIVE TEST	12523.2 PSI / 901.7 TSF	NO		100	46	LIMESTONE	
SB1-07	38+79.0 10 ft. LT.	R-2	32.0 to 32.5	UNCONFINED COMPRESSIVE TEST	21193.9 PSI / 1,526.0 TSF	NO		100	44	LIMESTONE	
SB1-07	38+79.0 10 ft. LT.	R-2	32.8 to 33.3	UNCONFINED COMPRESSIVE TEST	10085.1 PSI / 726.1 TSF	NO		100	44	LIMESTONE	
SB1-08	38+77.0 20 ft. RT.	R-2	30.0 to 31.2	UNCONFINED COMPRESSIVE TEST	12155.3 PSI / 875.2 TSF	NO		93	57	LIMESTONE	
SB1-08	38+77.0 20 ft. RT.	R-3	34.1 to 35.2	UNCONFINED COMPRESSIVE TEST	17207.7 PSI / 1,239.0 TSF	NO		94	84	LIMESTONE	
SB1-11	40+11.0 13 ft. LT.	R-1	37.0 to 37.9	UNCONFINED COMPRESSIVE TEST	18362.5 PSI / 1,322.1 TSF	NO		88	48	LIMESTONE	
SB1-11	40+11.0 13 ft. LT.	R-1	37.9 to 38.9	UNCONFINED COMPRESSIVE TEST	14809.6 PSI / 1,066.3 TSF	NO		88	48	LIMESTONE	
SB1-12	40+12.5 20 ft. RT.	R-2	40.4 to 41.1	UNCONFINED COMPRESSIVE TEST	10117.9 PSI / 728.5 TSF	NO		96	43	LIMESTONE	
SB1-12	40+12.5 20 ft. RT.	R-2	41.1 to 41.7	UNCONFINED COMPRESSIVE TEST	11807.5 PSI / 850.1 TSF	NO		96	43	LIMESTONE	

GENERAL NOTES

THIS SHEET IS INCLUDED FOR THE CONVENIENCE OF THE DEPARTMENT. REFER TO PUBLICATION 408 SECTION 102.05 FOR FURTHER INFORMATION.

FOR ADDITIONAL SOIL AND ROCK DESCRIPTIONS SEE PUBLICATION 222.

THE BORING LOGS AND RELATED INFORMATION DEPICT SUBSURFACE CONDITIONS ONLY AT THE SPECIFIC LOCATIONS AND DATES INDICATED. SUBSURFACE CONDITIONS MAY DIFFER FROM THE CONDITIONS REPORTED AT THE SPECIFIC LOCATIONS. ALSO, THE PASSAGE OF TIME MAY RESULT IN A CHANGE OF CONDITIONS AT THE BORING LOCATIONS.

LEGEND

PP	POCKET PENETROMETER
T	TORVANE
NTS	NOT TO SCALE
BCA	BOTTOM OF COARSE AGGREGATE
BFE	BOTTOM OF FOOTING ELEVATION
TOR	ESTIMATED TOP OF ROCK ELEVATION

SR 3013 PREVIOUSLY KNOWN AS LR 22075
BMS STR ID:22-3013-0020-0291 MPMS/ECMS PROJ:97828 BRKEY:67416

COMMONWEALTH OF PENNSYLVANIA
DEPARTMENT OF TRANSPORTATION

DAUPHIN COUNTY
SR 0083 SECTION 079
SEG 0020 OFFSET 0291
SR 3013 (29TH STREET) STA 37+78.24 OVER
SR 0083 & NORFOLK SOUTHERN RAILWAY COMPANY
3-SPAN CONTINUOUS COMPOSITE P/S CONCRETE
PA BULB-TEE BEAM BRIDGE
STRUCTURE BORINGS - 8

COMMONWEALTH OF PENNSYLVANIA
REGISTERED PROFESSIONAL
MARK T. EVANS
GEOLOGIST
PG005251

S - 39451

DISTRICT	COUNTY	ROUTE	SECTION	SHEET
8-0	DAUPHIN	0083	079	1 OF 125
		0230	045	
		3007	020	
		3013	009	

CITY OF HARRISBURG, SWATARA TWP, PAXTANG BOROUGH

REVISION NUMBER	REVISIONS	DATE	BY

SHEET INDEX BLOCK

DESCRIPTION	SHEET
INDEX MAP	1-3
GENERAL DETAILS	4-7
SIGNING TABS	8-33
PAVEMENT MARKING AND DELINEATION TABS	34-75
PLAN SHEETS	76-112
SIGN STRUCTURE PLANS	113-118
SIGN FABRICATION DETAILS	119-125

LEGEND

- PLAN

NOTES

PER PENNDOT PUB 408 SECTION 901.3(h), RESET EXISTING SEGMENT MARKERS FROM EXISTING MILE MARKERS SIGN POSTS ON PROPOSED CORRESPONDING MILE MARKER POST.

PER PUBLICATION 236, ALL D10-5 SIGNS ARE TO USE NORTH OR SOUTH (IN THE APPROPRIATE DIRECTION) USING AN INTERSTATE 83 SHIELD.

PLAN SHEETS LEGEND

- W/4" - WHITE LINE/WIDTH
- W/6" - WHITE LINE/WIDTH
- W/8" - WHITE LINE/WIDTH
- W/24" - WHITE LINE/WIDTH
- BW/6" - BROKEN WHITE LANE LINE/WIDTH
- AW/8" - AUXILIARY WHITE LANE LINE/WIDTH
- DEW/6" - DOTTED EXTENSION WHITE LINE/WIDTH
- DEY/4" - DOTTED EXTENSION YELLOW LINE/WIDTH
- Y/4" - YELLOW LINE/WIDTH
- Y/24" - YELLOW LINE/WIDTH
- DY/4" - DOUBLE YELLOW LINE/WIDTH
- BY/4" - BROKEN YELLOW LINE/WIDTH
- SNOWPLOWABLE RAISED PAVEMENT MARKER TWO WAY HOLDER WITH REFLECTOR (W/B)
- SNOWPLOWABLE RAISED PAVEMENT MARKER TWO WAY HOLDER WITH REFLECTOR (W/R)
- SNOWPLOWABLE RAISED PAVEMENT MARKER TWO WAY HOLDER WITH REFLECTOR (Y/R)
- SNOWPLOWABLE RAISED PAVEMENT MARKER TWO WAY HOLDER WITH REFLECTOR (Y/B)
- SNOWPLOWABLE RAISED PAVEMENT MARKER TWO WAY HOLDER WITH REFLECTOR (Y/Y)
- FLEXIBLE DELINEATOR POST, GROUND-MOUNT TYPE GM-1, RED POST WITH WHITE SHEETING
- FLEXIBLE DELINEATOR POST, GROUND-MOUNT TYPE GM-2, WHITE POST WITH WHITE/BLANK SHEETING
- FLEXIBLE DELINEATOR POST, GROUND-MOUNT TYPE GM-2, YELLOW POST WITH YELLOW/BLANK SHEETING
- FLEXIBLE DELINEATOR POST, GROUND-MOUNT TYPE GM-2, YELLOW POST WITH YELLOW/RED SHEETING
- FLEXIBLE DELINEATOR POST, GROUND-MOUNT TYPE GM-2, WHITE POST WITH WHITE/RED SHEETING
- FLEXIBLE DELINEATOR POST, SURFACE-MOUNT TYPE SM-2, WHITE POST WITH WHITE/BLANK SHEETING
- FLEXIBLE DELINEATOR POST, SURFACE-MOUNT TYPE SM-2, YELLOW POST WITH YELLOW/RED SHEETING
- FLEXIBLE DELINEATOR POST, SURFACE-MOUNT TYPE SM-2, YELLOW POST WITH YELLOW/BLANK SHEETING
- TYPE B AND D W/R GUIDE RAIL MOUNT OR TYPE R W/R BARRIER MOUNT
- TYPE B AND D W/B GUIDE RAIL MOUNT OR TYPE R W/B BARRIER MOUNT
- BARRIER MOUNTED DELINEATOR, SIDE-MOUNT TYPE O, (Y/B)
- BARRIER MOUNTED DELINEATOR, SIDE-MOUNT TYPE R, (Y/R)
- BARRIER MOUNTED DELINEATOR, SIDE-MOUNT TYPE R, (Y/Y)
- PROPOSED GROUND MOUNTED SIGN
- PROPOSED HIGHWAY LIGHTING
- PROPOSED UNDERPASS LIGHTING
- DETAIL PLAN SHEET/ FAB SIGN NUMBER/ MOUNTING
- PROPOSED OVERHEAD STRUCTURE MOUNTED SIGN
- EXISTING GROUND MOUNTED SIGN
- TRAFFIC FLOW ARROW
- BIKE LANE

SCALE

0 150 300 FEET

INDEX MAP SHEET 1 OF 3

SIGNING AND PAVEMENT MARKING PLAN

RECOMMENDED 02-13-2023

Christopher C. Flad, P.E.
2023.02.13 15:22:23 -05'00'

DISTRICT TRAFFIC ENGINEER

PREPARED BY: JOHNSON, MIRMIRAN and THOMPSON, INC. 220 ST. CHARLES WAY, SUITE 200 YORK, PA 17402

COMMONWEALTH OF PENNSYLVANIA REGISTERED PROFESSIONAL ENGINEER EVAN M. LIGDA PE-087865 12/01/2022

PREPARED BY: HNTB CORPORATION 4507 NORTH FRONT STREET SUITE 300 HARRISBURG, PA 17110

COMMONWEALTH OF PENNSYLVANIA REGISTERED PROFESSIONAL ENGINEER CHRISTOPHER DEATS PE079050 12/01/22

12/1/2022
FILENAME: 63016_079-s-cv-idx01.dgn

SEE SHEET 112 OF 125

DISTRICT	COUNTY	ROUTE	SECTION	SHEET
8-0	DAUPHIN	0083	079	91 OF 125
		0230	045	
		3007	020	
		3013	009	

CITY OF HARRISBURG, SWATARA TWP, PAXTANG BOROUGH

REVISION NUMBER	REVISIONS	DATE	BY

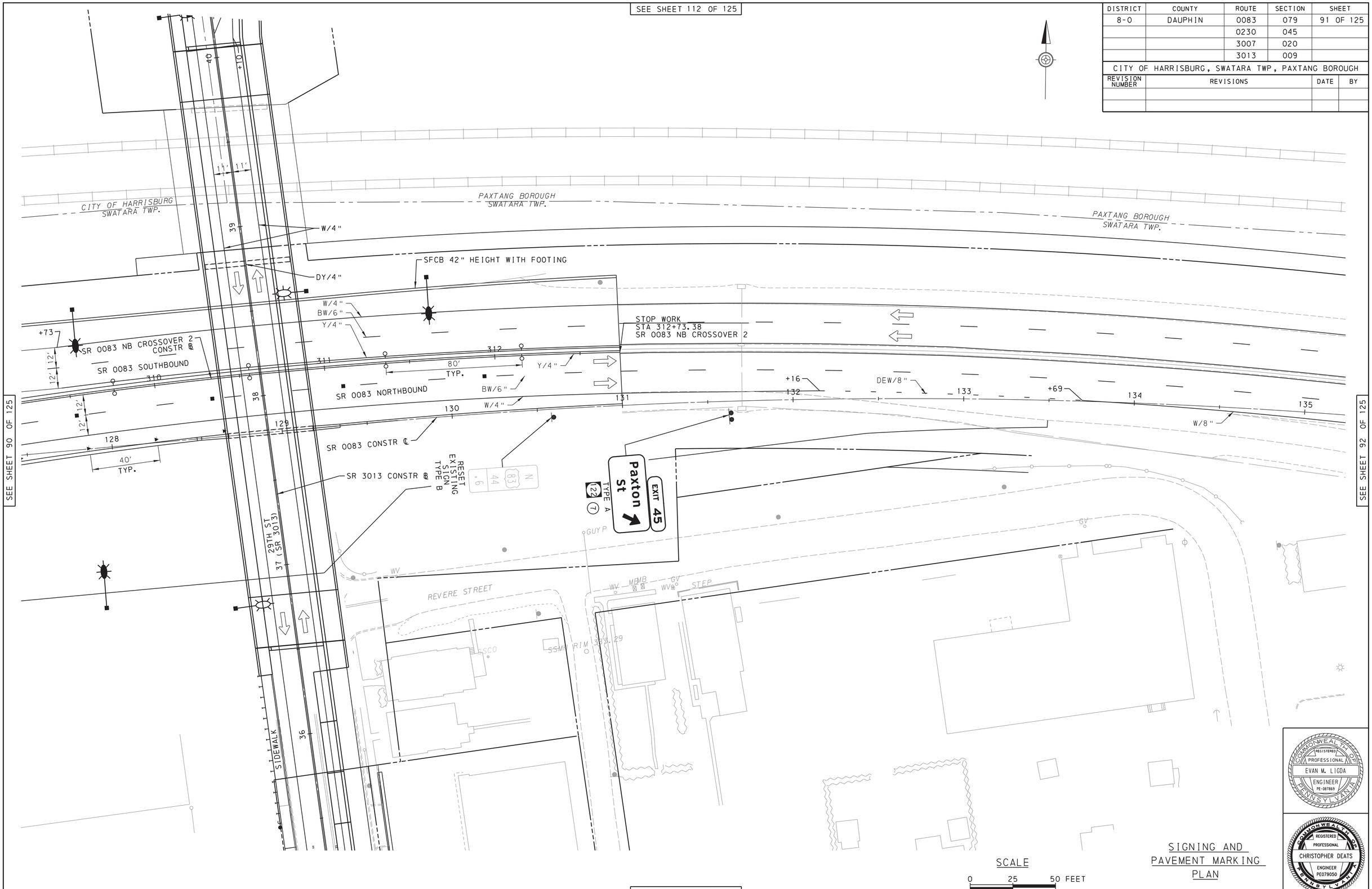

SCALE

0 25 50 FEET

SIGNING AND PAVEMENT MARKING PLAN

COMMONWEALTH OF PENNSYLVANIA
REGISTERED PROFESSIONAL
EVAN M. LIGDA
ENGINEER
PE-087869

COMMONWEALTH OF PENNSYLVANIA
REGISTERED PROFESSIONAL
CHRISTOPHER DEATS
ENGINEER
PE079050

12/1/2022
FILENAME: 63016.079-s-cv-pln16.dgn

DISTRICT	COUNTY	ROUTE	SECTION	SHEET
8-0	DAUPHIN	0083	079	112 OF 125
		0230	045	
		3007	020	
		3013	009	

CITY OF HARRISBURG, SWATARA TWP, PAXTANG BOROUGH

REVISION NUMBER	REVISIONS	DATE	BY

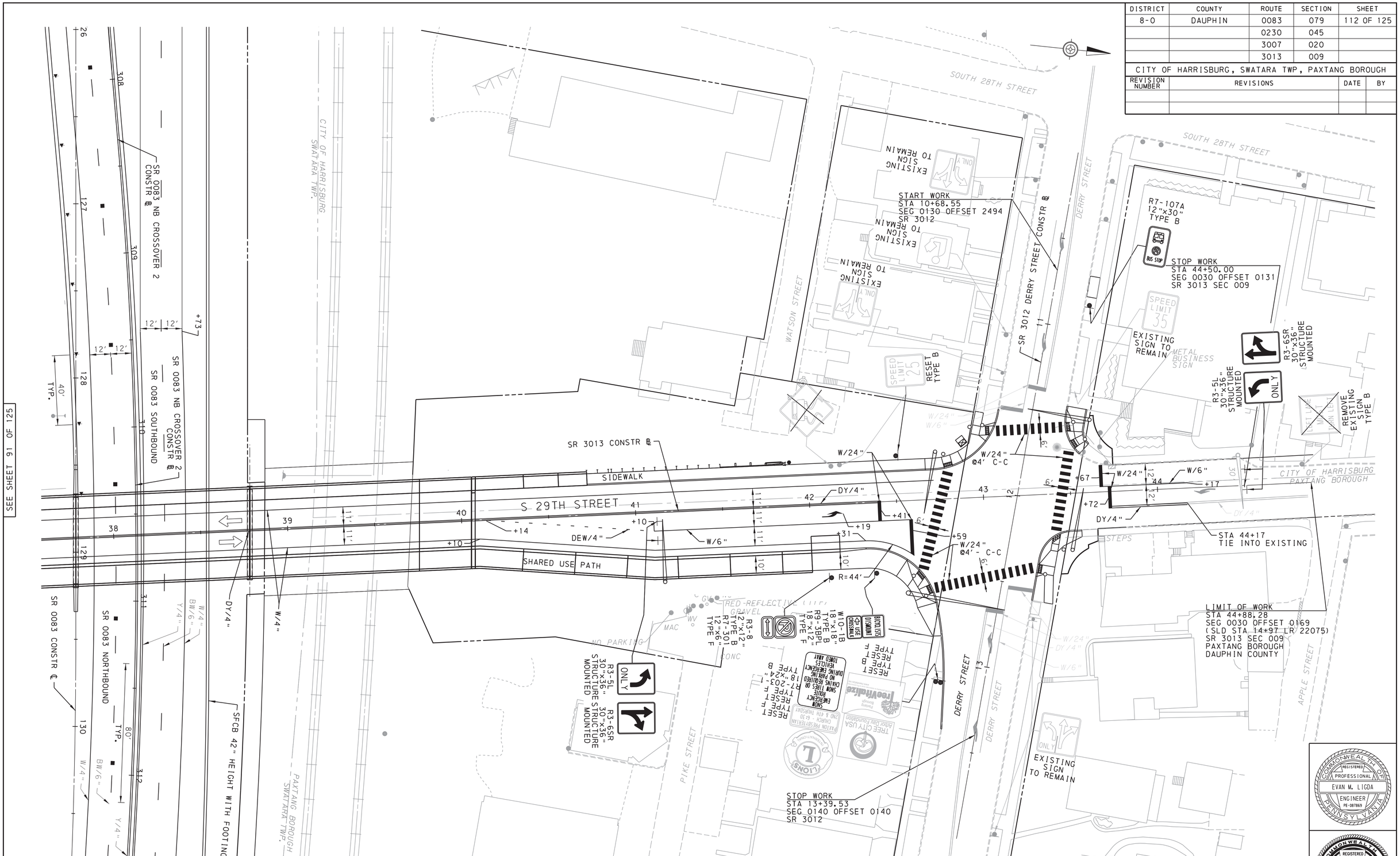

SIGNING AND PAVEMENT MARKING PLAN (S 29TH ST & DERRY ST)

COMMONWEALTH OF PENNSYLVANIA REGISTERED PROFESSIONAL ENGINEER EVAN M. LIGDA PE-087869

COMMONWEALTH OF PENNSYLVANIA REGISTERED PROFESSIONAL ENGINEER CHRISTOPHER DEATS PE079050

12/1/2022
FILENAME: 63016_079-s-cv-pln31.dgn

DISTRICT	COUNTY	ROUTE	SECTION	SHEET
8-0	DAUPHIN	0083	079	1 OF 85
		0230	045	
		3007	020	
		3013	009	
CITY OF HARRISBURG, PAXTANG BOROUGH, SWATARA TWP				

REVISION NUMBER	REVISIONS	DATE	BY

CONSTRUCTION SEQUENCE

STAGE 1

1. SHIFT TRAFFIC TO THE LEFT AND CONSTRUCT SR 0230 (CAMERON STREET) NB WIDENING FROM STA 11+90 TO STA 44+50 RT AND INTERCHANGE RAMPS (RAMPS OP & QR) AS SHOWN. INSTALL TEMPORARY TRAFFIC SIGNAL AT THE INTERSECTION OF SR 0230 (CAMERON STREET) AND SR 3009 / SR 3010 (PAXTON STREET).

2. DETOUR SR 0083 FOR DEMOLITION AND CLEAN-UP OF THE SR 3013 (29TH STREET) BRIDGE.

   DETOUR SR 3013 (29TH STREET) AND CONSTRUCT SR 3013 (29TH STREET) BRIDGE AND FULL DEPTH ROADWAY FROM STA 34+50 TO STA 43+00. INSTALL TEMPORARY TRAFFIC SIGNAL AT THE INTERSECTION OF SR 3012 (DERRY STREET) AND SR 3013 (29TH STREET). WHILE DETOUR IS IN PLACE, MAINTAIN ACCESS TO ALL BUSINESSES DURING BUSINESS HOURS AND CONSTRUCT WIDENING AS FOLLOWS:

   STAGE 1A - SHIFT SR 3013 (29TH STREET) TRAFFIC AND CONSTRUCT WIDENING FROM STA 30+00 TO STA 34+50 LT
   STAGE 1B - RECONSTRUCT WAYNE STREET TIE-IN (RIGHT SIDE) BY MAINTAINING TRAFFIC IN ACCORDANCE WITH PUB. 213 GENERAL APPLICATION 6-46.
   STAGE 1C - RECONSTRUCT 8-FOOT SECTION OF SR 3013 RT FROM STA 32+50 TO STA 34+00.
   STAGE 1D - SHIFT SR 3013 (29TH STREET) TRAFFIC AND CONSTRUCT WIDENING FROM STA 30+00 TO STA 34+50 RT RECONSTRUCT WAYNE STREET TIE-IN (LEFT SIDE).

4. CLOSE THE EXISTING SR 0083 NB SHOULDER AND CONSTRUCT PROPOSED SR 0083 NB LANES FROM STA 97+00 TO STA 131+00.

   - CONSTRUCT NB SIGN STRUCTURE AT STA 99+85.
   - CONSTRUCT NB SIGN STRUCTURE AT STA 110+64.
   - CONSTRUCT NB OUTSIDE (RT) SHOULDER FOOTING AND BASE FOR SIGN STRUCTURE AT STA 122+23.

5. CONSTRUCT FULL DEPTH TEMPORARY SHOULDER FROM STA 121+73 TO STA 132+72 LT, SR 0083 SB IN ACCORDANCE WITH PATA 401-A

6. CONSTRUCT FULL DEPTH TEMPORARY PAVEMENT TIE-IN AT SR 0083 NB LIMIT OF WORK FROM STA 129+50 TO STA 133+50 RT

7. CONSRUCT FULL DEPTH WIDENING FOR TEMPORARY CROSSOVER FROM STA 98+20 TO STA 109+57 AS SHOWN IN THE DETAIL. COMPLETE TIE-IN OF TEMPORARY CROSSOVER TO THE EXISTING SR 0083 NB LANES IN ACCORDANCE WITH PATA 401-A.

STAGE 2

1. SHIFT TRAFFIC TO THE RIGHT AND CONSTRUCT SR 0230 (CAMERON STREET) SB WIDENING FROM STA 11+90 TO STA 44+50 LT REVISE TEMPORARY TRAFFIC SIGNAL AT THE INTERSECTION OF SR 0230 (CAMERON STREET) AND SR 3009 / 3010 (PAXTON STREET) AND INSTALL TEMPORARY TRAFFIC SIGNAL AT THE INTERSECTION OF SR 0230 AND SYCAMORE STREET

2. AFTER SR 3013 (29TH STREET) IS OPEN TO TRAFFIC, DETOUR SR 0083 FOR DEMOLITION AND CLEAN-UP OF THE SR 3007 (19TH STREET) BRIDGE.

3. DETOUR AND CONSTRUCT SR 3007 (19TH STREET) BRIDGE, SR 8021 INTERCHANGE, ALL RETAINING WALLS, AND FULL DEPTH ROADWAY FROM STA 93+40 TO STA 106+00. INSTALL TEMPORARY TRAFFIC SIGNAL AT THE INTERSECTION OF SR 3010 (PAXTON STREET) AND SR 3007 (19TH STREET).

4. DURING DETOUR OF SR 8021 INTERCHANGE, CONSTRUCT PROPOSED SR 0083 NB LANES STA 77+20 TO STA 97+00 AND TEMPORARY RAMP U TIE-IN.

5. TRANSITION SR 0083 NB TRAFFIC ONTO PROPOSED LANES USING THE TEMPORARY CROSSOVER.

6. SHIFT SR 0083 SB TRAFFIC ONTO RECONSTRUCTED SHOULDER AND CONSTRUCT REMAINING SR 0083 NB AND PARTIAL SB LANES FROM STA 97+00 TO STA 131+00.
   - CONSTRUCT MEDIAN FOOTING AND BASE OF SB SIGN STRUCTURE AT STA 118+17.
   - CONSTRUCT MEDIAN FOOTING AND COMPLETE NB SIGN STRUCTURE AT STA 122+23.
   - PARTIALLY DEMOLISH ABANDONED RAILROAD BRIDGE UNDER SR 0083 (STA 120+00 TO STA 122+00) IN ACCORDANCE WITH THE BRIDGE REMOVAL PLAN IN THE CONSTRUCTION PLAN DETAILS.

7. REMOVE EXISTING SR 0083 MEDIAN BARRIER AND CONSTRUCT FULL DEPTH TEMPORARY PAVEMENT IN THE EXISTING MEDIAN FOR TEMPORARY CROSSOVER FROM STA 90+75 TO STA 98+50 IN ACCORDANCE WITH THE DETAIL AND PATA 401-B.

STAGE 3

1. COMPLETE FINAL OVERLAY AND PAVEMENT MARKINGS ON SR 0230 (CAMERON STREET) AND SHIFT TRAFFIC INTO PROPOSED LANE LOCATIONS. CLOSE TURN LANES ONTO RAMPS AS SHOWN.

2. CLOSE AND DETOUR 13TH STREET SB RAMPS AND COMPLETE CONSTRUCTION OF SB RAMPS TO SR 0230 (CAMERON STREET)

3. CONSTRUCT NB RAMPS TO SR 0230 (CAMERON STREET) AS FOLLOWS:

   STAGE 3A - COMPLETE CONSTRUCTION AND TIE-IN OF NB EXIT RAMP TO SR 0230 WHILE 13TH STREET NB INTERCHANGE REMAINS OPEN TO TRAFFIC.

   STAGE 3B - OPEN NB EXIT RAMP TO SR 0230 AND CLOSE NB EXIT RAMP TO 13TH STREET. COMPLETE CONSTRUCTION OF NB ENTRANCE RAMP FROM SR 0230 WHILE ENTRANCE RAMP FROM 13TH STREET REMAINS OPEN. COMPLETE FINAL SECTION OF RAMP FOLLOWING OPENING RAMP R TO TRAFFIC AND CLOSING EXISTING RAMP C.

4. SHIFT SR 0083 NB TRAFFIC ONTO PROPOSED NB LANES BETWEEN STA 75+00 AND STA 82+00.

5. REMOVE SECTION OF EXISTING MEDIAN BARRIER AND COMPLETE PAVING AND INSTALLATION OF PROPOSED TEMPORARY BARRIER FOR CROSSOVER 1 (SR 0083 STA 73+50 TO STA 83+00).

6. OPEN SR 8021 (19TH STREET) INTERCHANGE AND SR 3007 TO TRAFFIC. SR 3007 BRIDGE CAN BE COMPLETED IN STAGE 3, IF NECESSARY, BUT INTERCHANGE RAMPS AND CONNECTION TO SR 3010 (PAXTON STREET) MUST BE OPENED TO TRAFFIC.

7. CONSTRUCT REMAINING SR 0083 NB SHOULDER STA 88+00 TO STA 98+00.

8. SHIFT SR 0083 SB TRAFFIC ONTO NEW SR 0083 NB ROADWAY STA 108+00 TO STA 131+00. UTILIZE THE EXISTING CROSSOVER (STA 97+00 TO STA 108+00) USED FOR NB TRAFFIC IN STAGE 2.

9. COMPLETE CONSTRUCTION OF SR 0083 SB LANES STA 113+30 TO STA 131+00. COMPLETE DEMOLITION AND REMOVAL OF ABANDONED RAILROAD BRIDGE UNDER SR 0083 (STA 120+00 TO STA 122+00) IN ACCORDANCE WITH THE BRIDGE REMOVAL PLAN IN THE CONSTRUCTION PLAN DETAILS.

STAGE 4

1. SHIFT SR 0083 SB TRAFFIC INTO PROPOSED LANE LOCATIONS. MAINTAIN PATTERN FOR SR 0083 NB TRAFFIC AND CONSTRUCT REMAINING PORTION OF SR 0083 NB IN THE AREA OF THE TEMPORARY CROSSOVER (STA 98+00 TO STA 109+57).

2. PLACE FINAL OVERLAY AND PAVEMENT MARKINGS ON SR 0083.

SHEET INDEX

DESCRIPTION	SHEET
GENERAL NOTES	1
INDEX SHEETS	2 - 3
TABULATION SHEETS	4 - 6
DETAIL SHEETS	7 - 9
DETOUR PLAN SHEETS	10 - 25
TRAFFIC CONTROL PLAN SHEETS	26 - 70
TEMPORARY TRAFFIC SIGNAL PLANS	71 - 85

GENERAL NOTES

THIS WORK CONSISTS OF THE MAINTENANCE OF TRAFFIC AND THE PROTECTION OF THE TRAVELING PUBLIC APPROACHING THE CONSTRUCTION AREA AND WITHIN THE LIMITS OF CONSTRUCTION.

FURNISH, ERECT, PLACE AND MAINTAIN TRAFFIC CONTROL SIGNS AND DEVICES AND MAINTAIN TRAFFIC DURING HOURS OF CONSTRUCTION AND AT ALL OTHER TIMES IN ACCORDANCE WITH THE METHODS INDICATED ON THESE DRAWINGS AND,

1. THE SPECIAL PROVISIONS OF THE CONTRACT.
2. PA CODE, TITLE 67, CHAPTER 212, OFFICIAL TRAFFIC CONTROL DEVICES.
3. PDT PUBLICATION 213, TEMPORARY TRAFFIC CONTROL GUIDELINES.
4. PDT PUBLICATION 35, APPROVED CONSTRUCTION MATERIALS (BULLETIN 15).
5. PDT PUBLICATION 408, SPECIFICATIONS.
6. FEDERAL HIGHWAY ADMINISTRATION MANUAL ON UNIFORM TRAFFIC CONTROL DEVICES (MUTCD).
7. PDT PUBLICATION 236, HANDBOOK OF APPROVED SIGNS.
8. PDT PUBLICATION 111, TRAFFIC CONTROL PAVEMENT MARKING AND SIGNING STANDARDS.

IMMEDIATELY UPON COMPLETION OF THE WORK, REMOVE THE DEVICES. THE DEPARTMENT WILL REMOVE ANY TRAFFIC CONTROL DEVICES ERECTED BY DEPARTMENT FORCES.

COVER OR REMOVE ALL SIGNS NOT IN USE.

ALL SIGNS SHOWN ON PLANS ARE TO REMAIN UNLESS OTHERWISE STATED.

TRAFFIC CONTROL PLAN

RECOMMENDED MARCH 8 20 23
Christopher C. Flad, P.E.
2023.03.08 16:55:33 -05'00'
DISTRICT TRAFFIC ENGINEER

RECOMMENDED March 13, 2023
ADE - CONSTRUCTION

PREPARED BY:
JOHNSON, MIRMIRAN and THOMPSON, INC.
220 ST. CHARLES WAY
SUITE 200
YORK, PA 17402

COMMONWEALTH OF PENNSYLVANIA
REGISTERED PROFESSIONAL
DREW F. DALLAM
ENGINEER
PE-054775-E

28 November 2022

11/28/2022
FILENAME: 63016-s-tr-tcp-079-gen

DISTRICT	COUNTY	ROUTE	SECTION	SHEET
8-0	DAUPHIN	0083	079	29 OF 85
		0230	045	
		3007	020	
		3013	009	

CITY OF HARRISBURG AND SWATARA TOWNSHIP

REVISION NUMBER	REVISIONS	DATE	BY

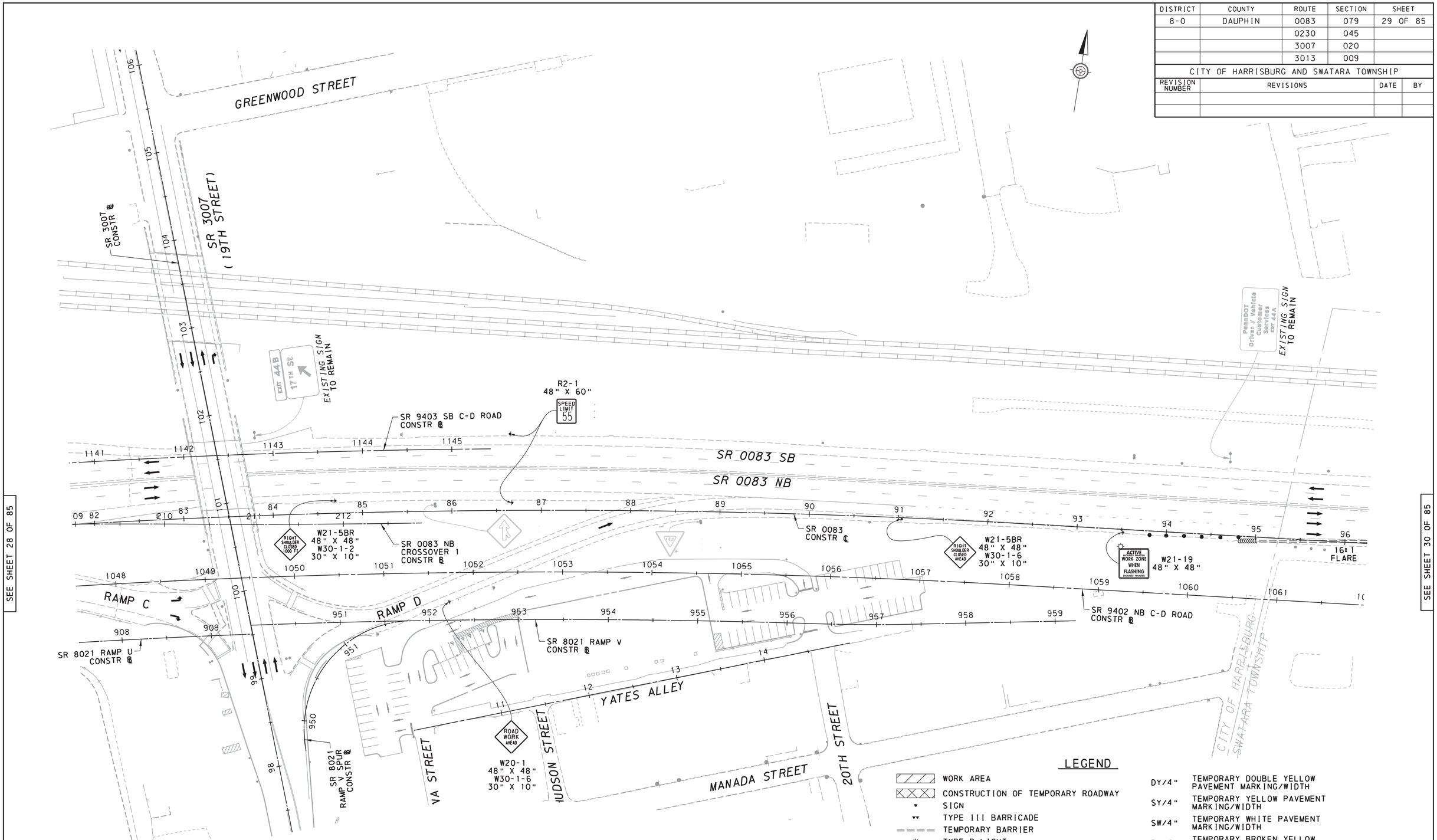

SCALE

0 50 100 FEET

TRAFFIC CONTROL PLAN
STAGE 1

LEGEND

	WORK AREA
	CONSTRUCTION OF TEMPORARY ROADWAY
	SIGN
	TYPE III BARRICADE
	TEMPORARY BARRIER
	TYPE B LIGHT
	CHANNELIZING DEVICE
	TEMPORARY IMPACT ATTENUATING DEVICE, TYPE V (REUSABLE), TEST LEVEL 3
	LANE FLOW ARROW
	ARROW PANEL
PCMS	PORTABLE CHANGEABLE MESSAGE SIGN

DY/4"	TEMPORARY DOUBLE YELLOW PAVEMENT MARKING/WIDTH
SY/4"	TEMPORARY YELLOW PAVEMENT MARKING/WIDTH
SW/4"	TEMPORARY WHITE PAVEMENT MARKING/WIDTH
BY/4"	TEMPORARY BROKEN YELLOW PAVEMENT MARKING/WIDTH
BW/6"	TEMPORARY BROKEN WHITE PAVEMENT MARKING/WIDTH
AW/8"	TEMPORARY AUXILIARY WHITE PAVEMENT MARKING/WIDTH
WDE/4"	TEMPORARY WHITE DOTTED EXTENSION PAVEMENT MARKING/WIDTH

COMMONWEALTH OF PENNSYLVANIA
REGISTERED PROFESSIONAL
DREW F. DALLAM
ENGINEER
PE-054775-E

11/28/2022
FILENAME: 63016-s-tr-tcp01-07.dgn

DISTRICT	COUNTY	ROUTE	SECTION	SHEET
8-0	DAUPHIN	0083	079	32 OF 85
		0230	045	
		3007	020	
		3013	009	

CITY OF HARRISBURG, PAXTANG BOROUGH AND SWATARA TWP

REVISION NUMBER	REVISIONS	DATE	BY

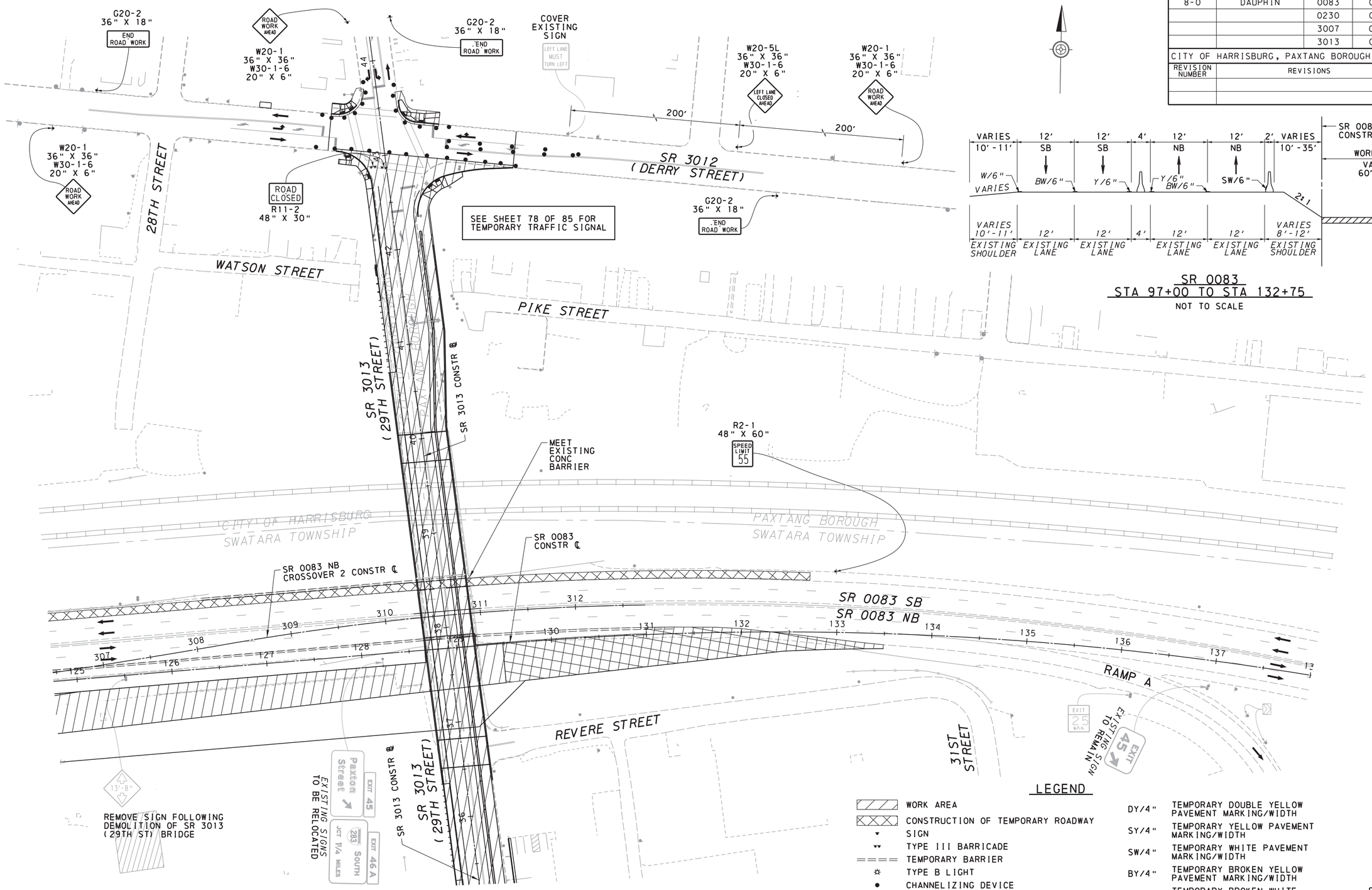

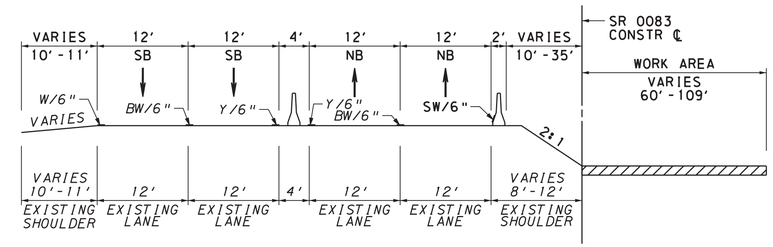

SR 0083
STA 97+00 TO STA 132+75
NOT TO SCALE

SCALE
0 50 100 FEET

TRAFFIC CONTROL PLAN
STAGE 1

FOR STAGE 1A, SEE SHEET 36 OF 85	FOR STAGE 1C, SEE SHEET 38 OF 85
FOR STAGE 1B, SEE SHEET 37 OF 85	FOR STAGE 1D, SEE SHEET 39 OF 85

LEGEND

	WORK AREA
	CONSTRUCTION OF TEMPORARY ROADWAY
	SIGN
	TYPE III BARRICADE
	TEMPORARY BARRIER
	TYPE B LIGHT
	CHANNELIZING DEVICE
	TEMPORARY IMPACT ATTENUATING DEVICE, TYPE V (REUSABLE), TEST LEVEL 3
	LANE FLOW ARROW
	ARROW PANEL
PCMS	PORTABLE CHANGEABLE MESSAGE SIGN

DY/4"	TEMPORARY DOUBLE YELLOW PAVEMENT MARKING/WIDTH
SY/4"	TEMPORARY YELLOW PAVEMENT MARKING/WIDTH
SW/4"	TEMPORARY WHITE PAVEMENT MARKING/WIDTH
BY/4"	TEMPORARY BROKEN YELLOW PAVEMENT MARKING/WIDTH
BW/6"	TEMPORARY BROKEN WHITE PAVEMENT MARKING/WIDTH
AW/8"	TEMPORARY AUXILIARY WHITE PAVEMENT MARKING/WIDTH
WDE/4"	TEMPORARY WHITE DOTTED EXTENSION PAVEMENT MARKING/WIDTH

COMMONWEALTH OF PENNSYLVANIA
REGISTERED PROFESSIONAL
DREW F. DALLAM
ENGINEER
PE-054175-E

SEE SHEET 31 OF 85
SEE SHEET 33 OF 85

11/28/2022
FILENAME: 63016-s-tr-tcp01-10.dgn

DISTRICT	COUNTY	ROUTE	SECTION	SHEET
8-0	DAUPHIN	0083	079	46 OF 85
		0230	045	
		3007	020	
		3013	009	

CITY OF HARRISBURG, PAXTANG BOROUGH, SWATARA TWP

REVISION NUMBER	REVISIONS	DATE	BY

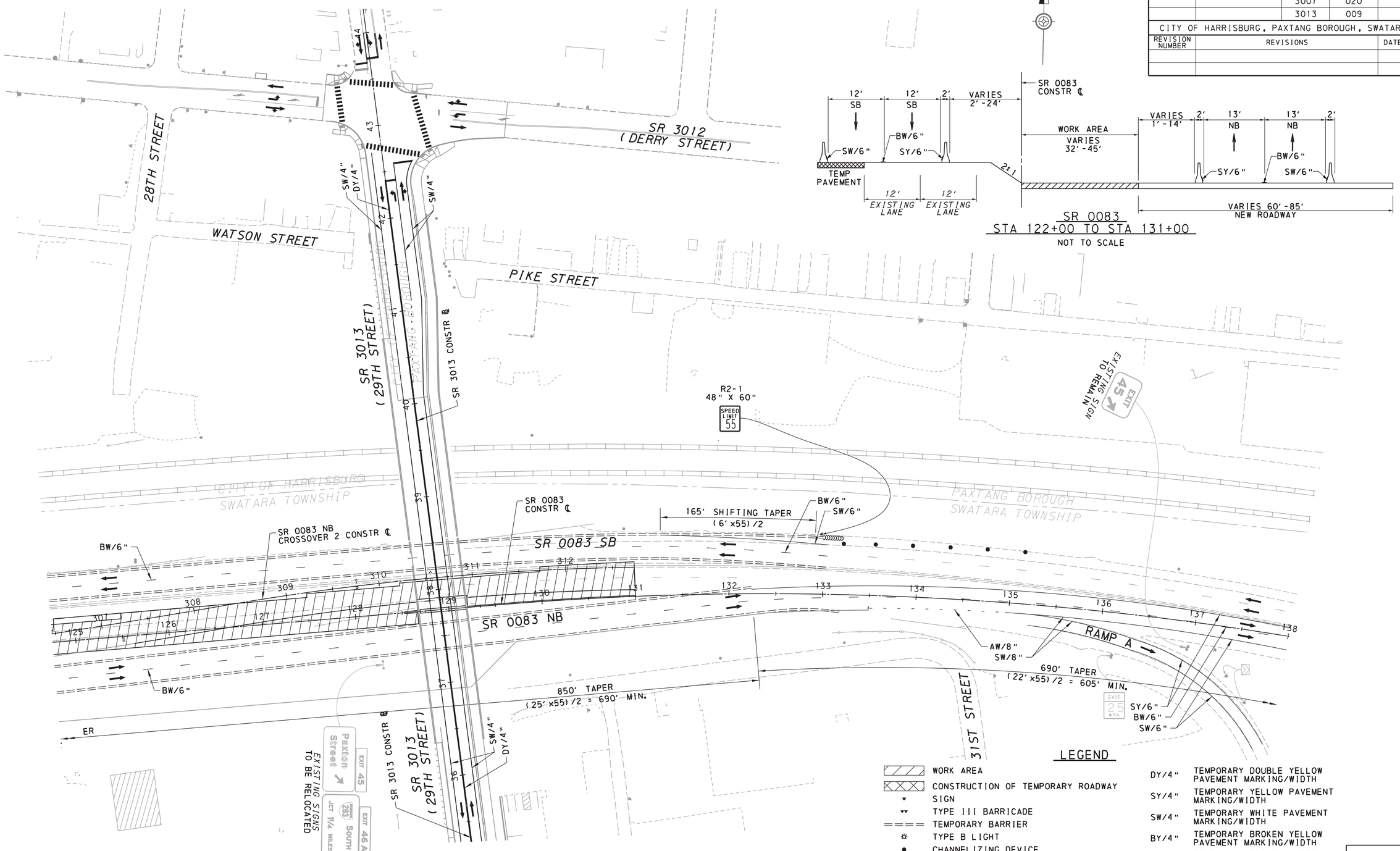

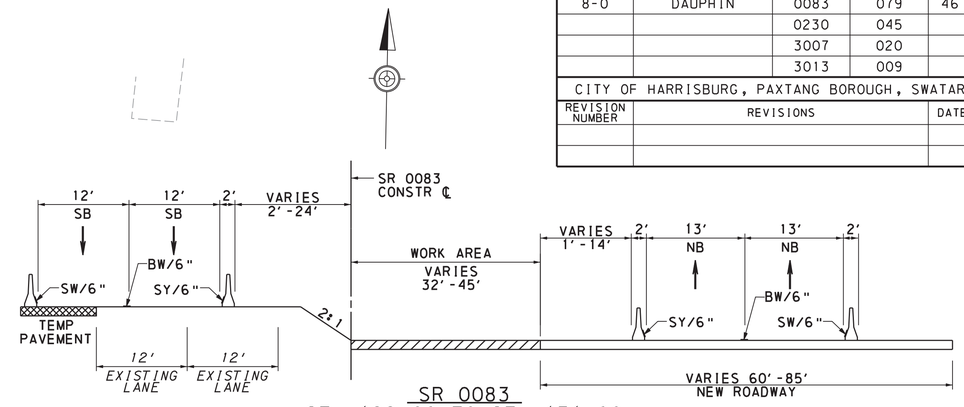

SR 0083
STA 122+00 TO STA 131+00
NOT TO SCALE

SCALE
0 50 100 FEET

TRAFFIC CONTROL PLAN
STAGE 2

LEGEND

	WORK AREA
	CONSTRUCTION OF TEMPORARY ROADWAY
	SIGN
	TYPE III BARRICADE
	TEMPORARY BARRIER
	TYPE B LIGHT
	CHANNELIZING DEVICE
	TEMPORARY IMPACT ATTENUATING DEVICE, TYPE V (REUSABLE), TEST LEVEL 3
	LANE FLOW ARROW
	ARROW PANEL
PCMS	PORTABLE CHANGEABLE MESSAGE SIGN

DY/4"	TEMPORARY DOUBLE YELLOW PAVEMENT MARKING/WIDTH
SY/4"	TEMPORARY YELLOW PAVEMENT MARKING/WIDTH
SW/4"	TEMPORARY WHITE PAVEMENT MARKING/WIDTH
BY/4"	TEMPORARY BROKEN YELLOW PAVEMENT MARKING/WIDTH
BW/6"	TEMPORARY BROKEN WHITE PAVEMENT MARKING/WIDTH
AW/8"	TEMPORARY AUXILIARY WHITE PAVEMENT MARKING/WIDTH
WDE/4"	TEMPORARY WHITE DOTTED EXTENSION PAVEMENT MARKING/WIDTH

COMMONWEALTH OF PENNSYLVANIA
REGISTERED PROFESSIONAL
DREW F. DALLAM
ENGINEER
PE-054775-E

11/28/2022
FILENAME: 63016-s-tr-tcp02-10.dgn

DISTRICT	COUNTY	ROUTE	SECTION	SHEET
8-0	DAUPHIN	0083	079	57 OF 85
		0230	045	
		3007	020	
		3013	009	

CITY OF HARRISBURG, PAXTANG BOROUGH, SWATARA TWP

REVISION NUMBER	REVISIONS	DATE	BY

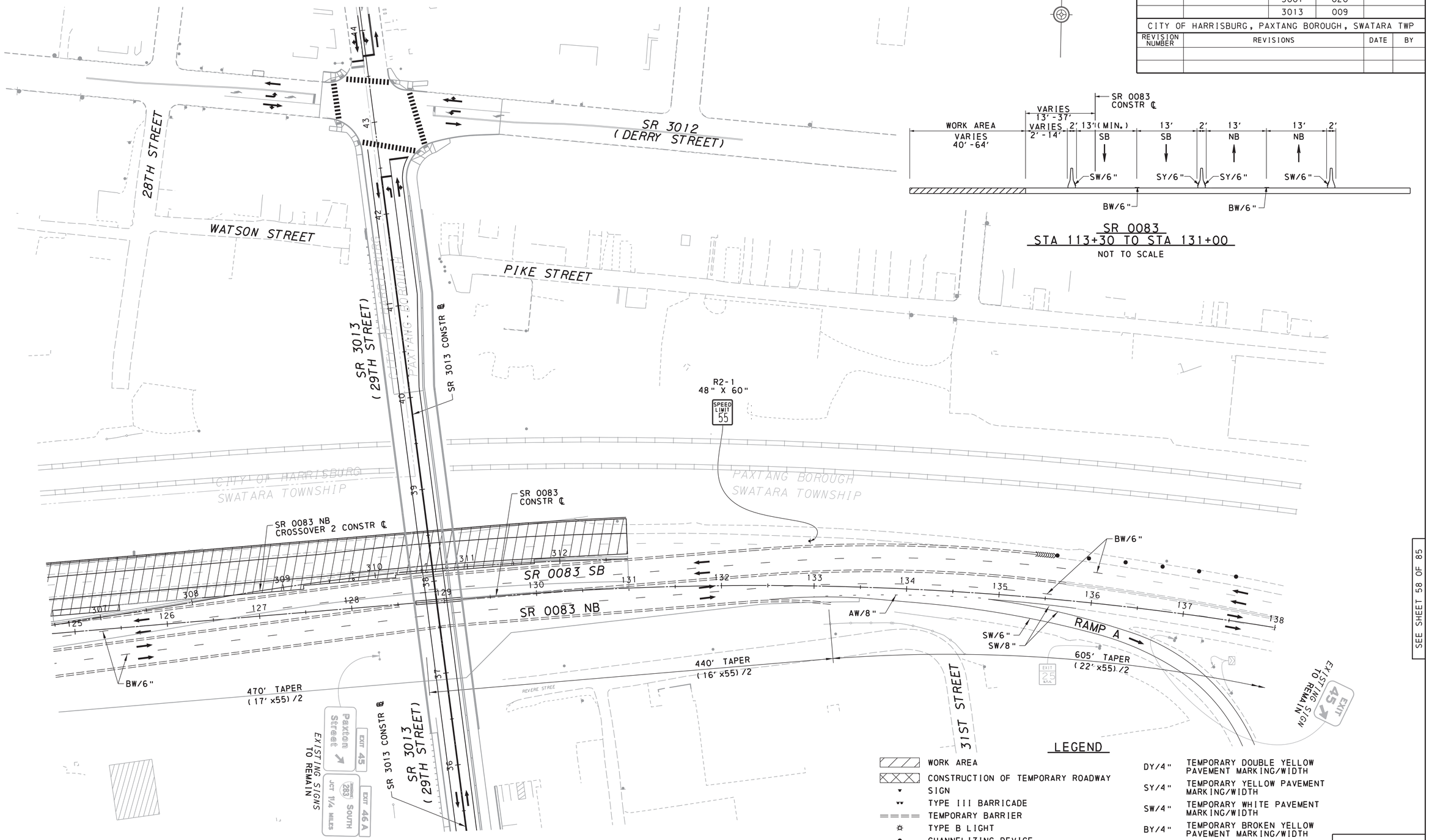

SR 0083
STA 113+30 TO STA 131+00
NOT TO SCALE

TRAFFIC CONTROL PLAN
STAGE 3

LEGEND

	WORK AREA
	CONSTRUCTION OF TEMPORARY ROADWAY
	SIGN
	TYPE III BARRICADE
	TEMPORARY BARRIER
	TYPE B LIGHT
	CHANNELIZING DEVICE
	TEMPORARY IMPACT ATTENUATING DEVICE, TYPE V (REUSABLE), TEST LEVEL 3
	LANE FLOW ARROW
	ARROW PANEL
PCMS	PORTABLE CHANGEABLE MESSAGE SIGN

DY/4"	TEMPORARY DOUBLE YELLOW PAVEMENT MARKING/WIDTH
SY/4"	TEMPORARY YELLOW PAVEMENT MARKING/WIDTH
SW/4"	TEMPORARY WHITE PAVEMENT MARKING/WIDTH
BY/4"	TEMPORARY BROKEN YELLOW PAVEMENT MARKING/WIDTH
BW/6"	TEMPORARY BROKEN WHITE PAVEMENT MARKING/WIDTH
AW/8"	TEMPORARY AUXILIARY WHITE PAVEMENT MARKING/WIDTH
WDE/4"	TEMPORARY WHITE DOTTED EXTENSION PAVEMENT MARKING/WIDTH

COMMONWEALTH OF PENNSYLVANIA
REGISTERED PROFESSIONAL
DREW F. DALLAM
ENGINEER
PE-054775-E

SEE SHEET 56 OF 85

SEE SHEET 58 OF 85

11/28/2022
FILENAME: 63016-s-tr-tcp03-10.dgn

DISTRICT	COUNTY	ROUTE	SECTION	SHEET
8-0	DAUPHIN	0083	079	1 OF 340
		0230	045	
		3007	020	
		3013	009	

CITY OF HARRISBURG, SWATARA TWP, PAXTANG BOROUGH

REVISION NUMBER	REVISIONS	DATE	BY

DAUPHIN COUNTY

SR 0083 SECTION 079

SR 0083 STA 39+50.00 TO STA 140+00.00 (LIMITS OF WORK)
TOTAL SHEETS 340

CROSS SECTIONS

SR 0083 NB CROSSOVER 1 - STA 200+68.00 TO STA 212+88.00 (SHEETS 2 THRU 18)
SR 0083 - STA 85+67.00 TO STA 118+25.00 (SHEETS 19 THRU 63)
SR 0083 NB CROSSOVER 2 - STA 300+00.00 TO STA 312+73.00 (SHEETS 64 THRU 81)
SR 0083 - STA 131+25.00 TO STA 136+00.00 (SHEETS 82 THRU 88)
BUNDLE 1 OF 3

CROSS SECTIONS

SR 0230 A - STA 7+02.00 TO STA 17+64.00 (SHEETS 90 THRU 104)
SR 0230 B - STA 17+64.00 TO STA 44+50.00 (SHEETS 105 THRU 142)
SR 8017 RAMP O TEMP - STA 598+77.00 TO STA 602+25.00 (SHEETS 143 THRU 147)
SR 8017 RAMP O - STA 602+41.00 TO STA 604+25.00 (SHEETS 148 THRU 150)
SR 8017 RAMP OP - STA 604+25.00 TO STA 609+00.00 (SHEETS 151 THRU 160)
SR 8017 RAMP OP SPUR - STA 620+00.00 TO STA 622+24.00 (SHEETS 161 THRU 164)
SR 8017 RAMP P - STA 650+00.00 TO STA 652+37.00 (SHEETS 165 THRU 170)
SR 8017 RAMP P TEMP - STA 652+37.00 TO STA 653+50.00 (SHEETS 171 THRU 173)
SR 8017 RAMP Q TEMP - STA 699+00.00 TO STA 701+24.00 (SHEETS 174 THRU 179)
SR 8017 RAMP Q - STA 701+24.00 TO STA 703+19.00 (SHEETS 180 THRU 186)
SR 8017 RAMP QR - STA 703+19.00 TO STA 706+25.00 (SHEETS 187 THRU 198)
SR 8017 RAMP QR SPUR - STA 720+00.00 TO STA 722+35.00 (SHEETS 199 THRU 203)
SR 8017 RAMP R - STA 750+00.00 TO STA 753+36.00 (SHEETS 204 THRU 212)
SR 8017 RAMP R TEMP - STA 753+36.00 TO STA 762+56.00 (SHEETS 213 THRU 226)
BUNDLE 2 OF 3

CROSS SECTIONS

SR 3007 - STA 93+25.00 TO STA 106+00.00 (SHEETS 228 THRU 246)
SR 3007 TEMP ACCESS - STA 10+00.00 TO STA 14+64.00 (SHEETS 247 THRU 253)
SR 8021 RAMP U TEMP - STA 899+07.00 TO STA 902+91.00 (SHEETS 254 THRU 259)
SR 8021 RAMP U - STA 902+91.00 TO STA 909+00.00 (SHEETS 260 THRU 268)
SR 8021 RAMP V - STA 950+50.00 TO STA 959+23.00 (SHEETS 269 THRU 281)
SR 8021 RAMP V SPUR - STA 949+66.00 TO STA 951+00.00 (SHEETS 282 THRU 284)
SR 9402 NB C-D ROAD - STA 1029+50.00 TO STA 1039+00.00 (SHEETS 285 THRU 303)
SR 9402 NB C-D ROAD - STA 1059+00.00 TO STA 1065+38.00 (SHEETS 304 THRU 312)
YATES ALLEY - STA 10+00.00 TO STA 14+75.00 (SHEETS 313 THRU 319)
SR 3013 - STA 29+92.00 TO STA 43+50.00 (SHEETS 320 THRU 338)
16TH STREET A - STA 23+25.00 TO 24+00.00 (SHEETS 339 THRU 340)
BUNDLE 3 OF 3

SCALE
0 10 20 FEET

PREPARED BY:
HNTB CORPORATION
4507 N FRONT STREET
SUITE 300
HARRISBURG, PA 17110

COMMONWEALTH OF PENNSYLVANIA
REGISTERED PROFESSIONAL
CHRISTOPHER M. DEATS
ENGINEER
PE079050

Christopher Deats

DATE: 3/21/23

3/21/2023
FILENAME: 63016_079-s-cv-xs03.1

PENNSYLVANIA DEPARTMENT OF TRANSPORTATION

CROSS SECTIONS

DISTRICT	COUNTY	ROUTE	SECTION	Prelim. Bk. No.	Final Bk. No.	SHEET
8-0	DAUPHIN	0083	079			328 OF 340

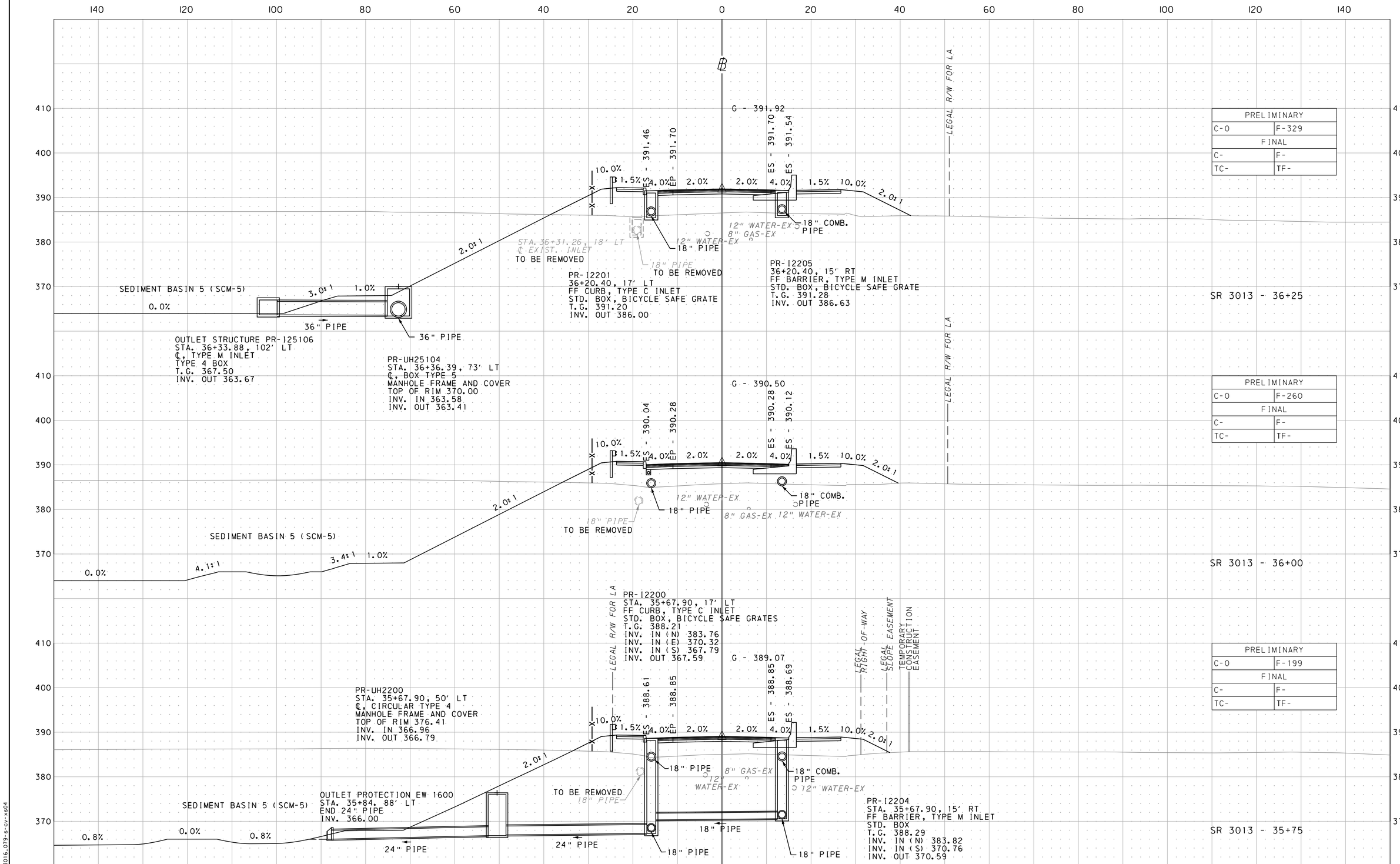

SCALE: 1INCH = 10 FEET

3/20/2023
FILENAME: 63016_079-s-cv-xs04

PENNSYLVANIA DEPARTMENT OF TRANSPORTATION

CROSS SECTIONS

DISTRICT	COUNTY	ROUTE	SECTION	Prelim. Bk. No.	Final Bk. No.	SHEET
8-0	DAUPHIN	0083	079			329 OF 340

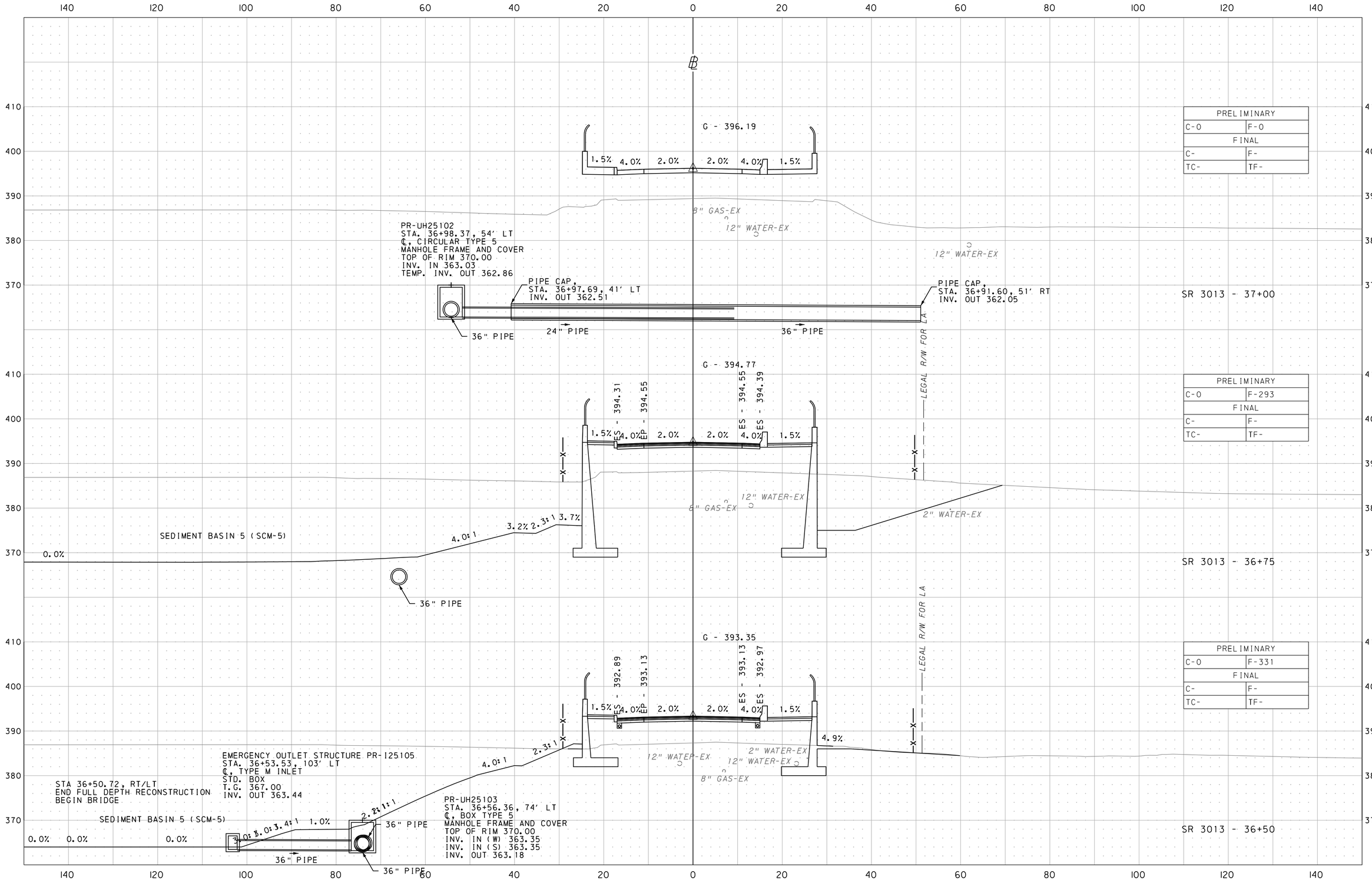

SCALE: 1 INCH = 10 FEET

3/20/2023
FILENAME: 63016_079-s-cv-xs04

PENNSYLVANIA DEPARTMENT OF TRANSPORTATION

CROSS SECTIONS

DISTRICT	COUNTY	ROUTE	SECTION	Prelim. Bk. No.	Final Bk. No.	SHEET
8-0	DAUPHIN	0083	079			330 OF 340

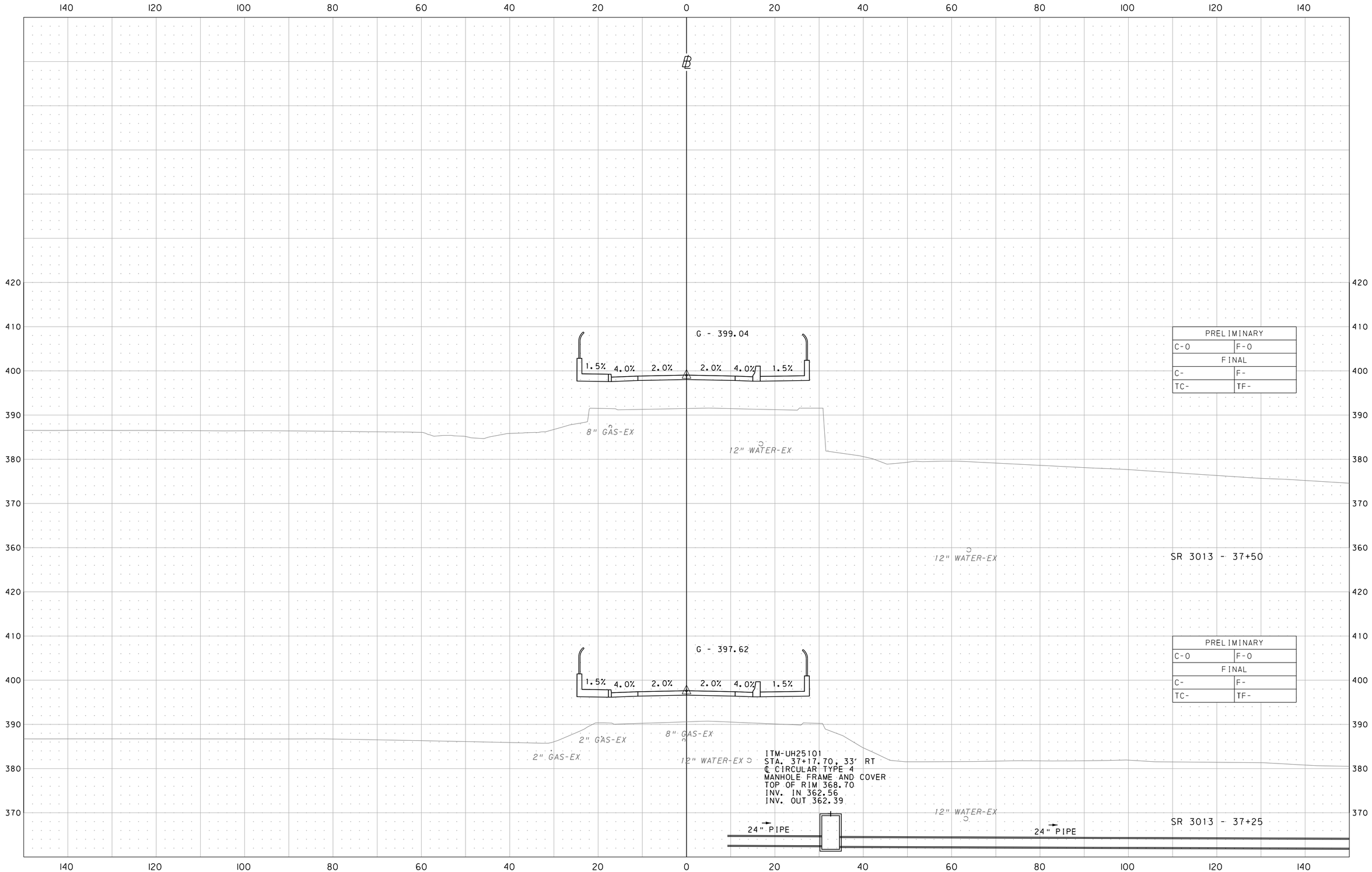

3/20/2023
FILENAME: 63016_079-s-cv-xs04

PENNSYLVANIA DEPARTMENT OF TRANSPORTATION

CROSS SECTIONS

DISTRICT	COUNTY	ROUTE	SECTION	Prelim. Bk. No.	Final Bk. No.	SHEET
8-0	DAUPHIN	0083	079			331 OF 340

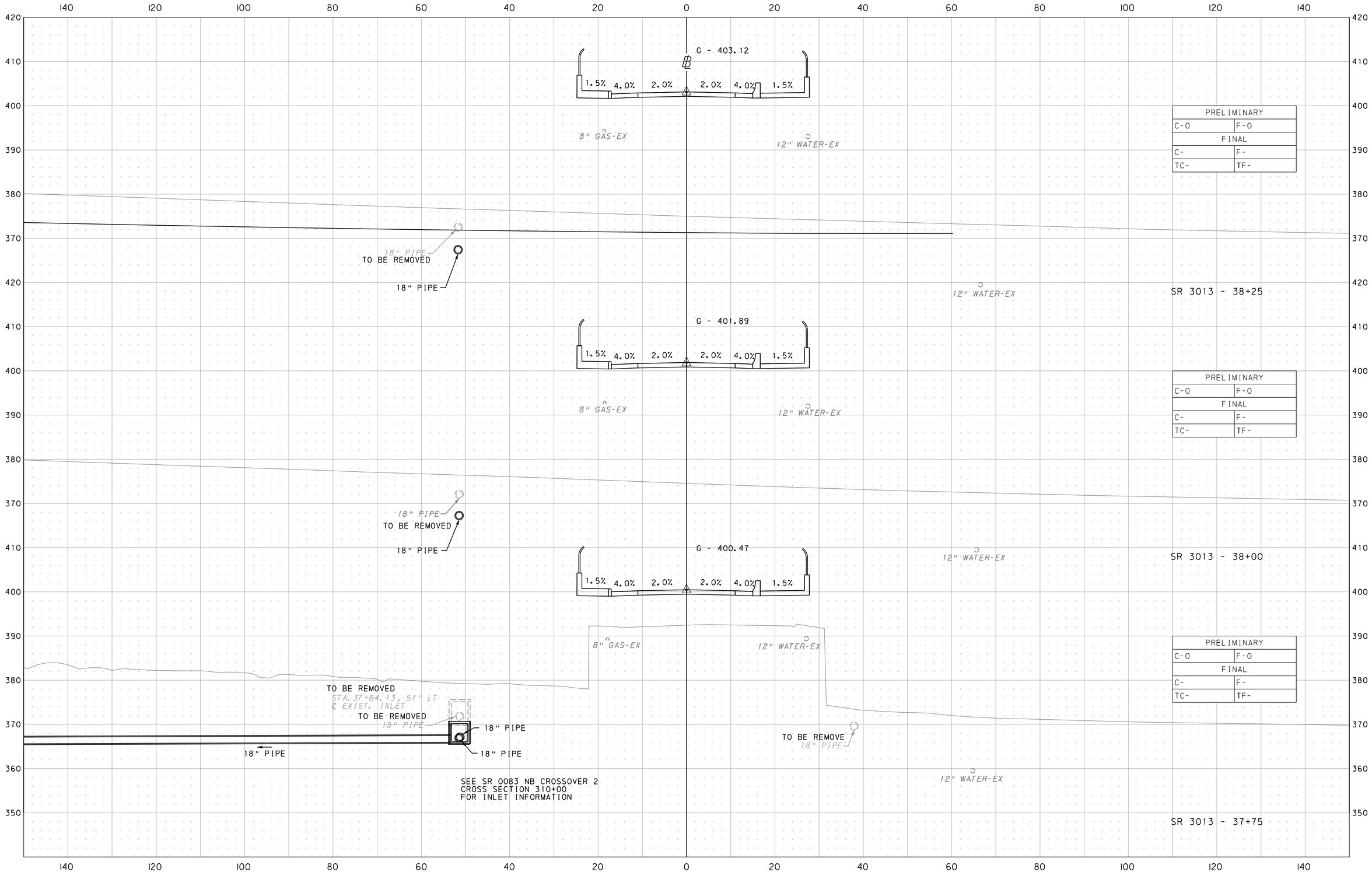

3/20/2023
FILENAME: 63016_079-s-cv-xs04

PENNSYLVANIA DEPARTMENT OF TRANSPORTATION

CROSS SECTIONS

DISTRICT	COUNTY	ROUTE	SECTION	Prelim. Bk. No.	Final Bk. No.	SHEET
8-0	DAUPHIN	0083	079			332 OF 340

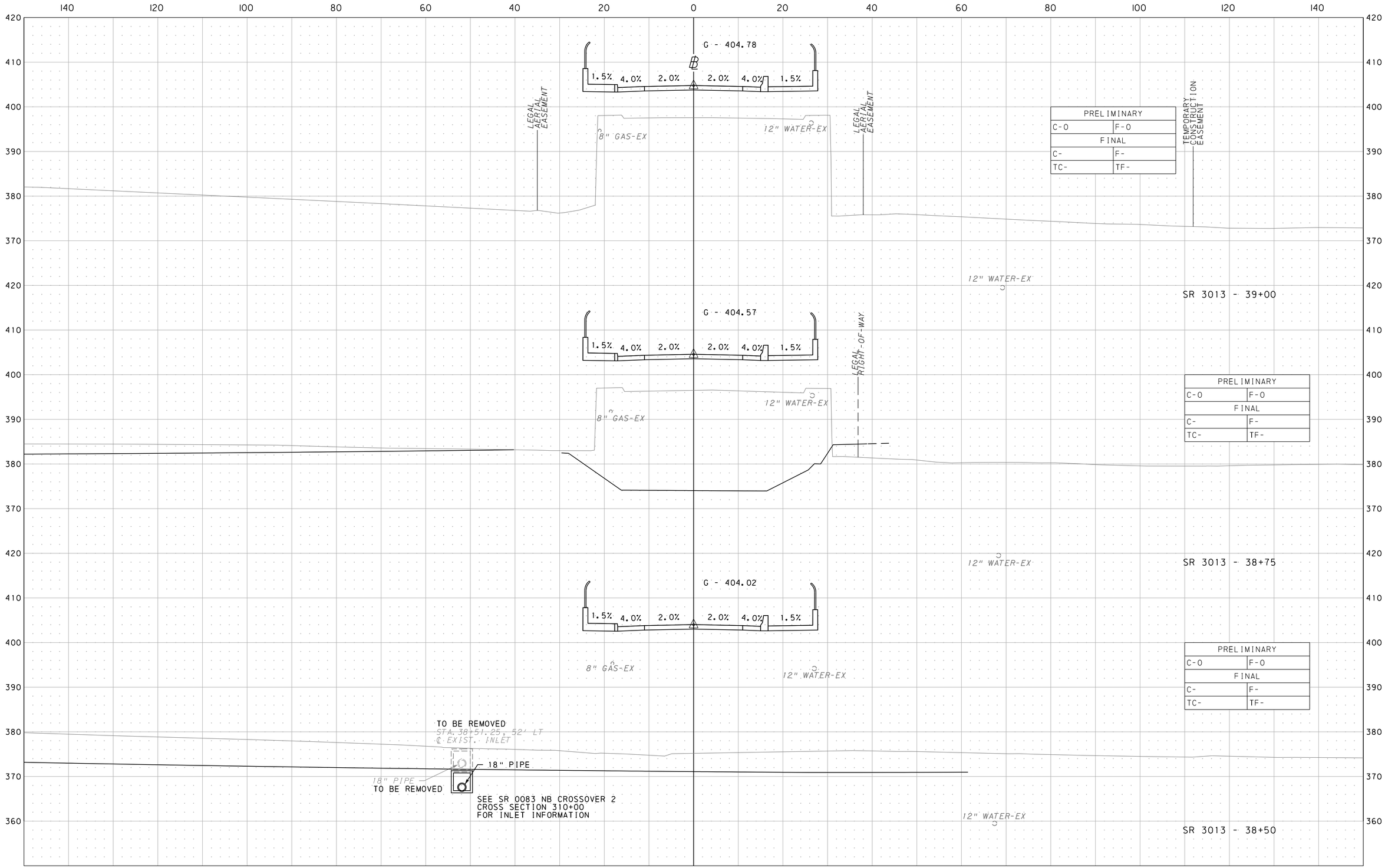

SCALE: 1 INCH = 10 FEET

3/20/2023
FILENAME: 63016_079-s-cv-xs04

PENNSYLVANIA DEPARTMENT OF TRANSPORTATION

CROSS SECTIONS

DISTRICT	COUNTY	ROUTE	SECTION	Prelim. Bk. No.	Final Bk. No.	SHEET
8-0	DAUPHIN	0083	079			333 OF 340

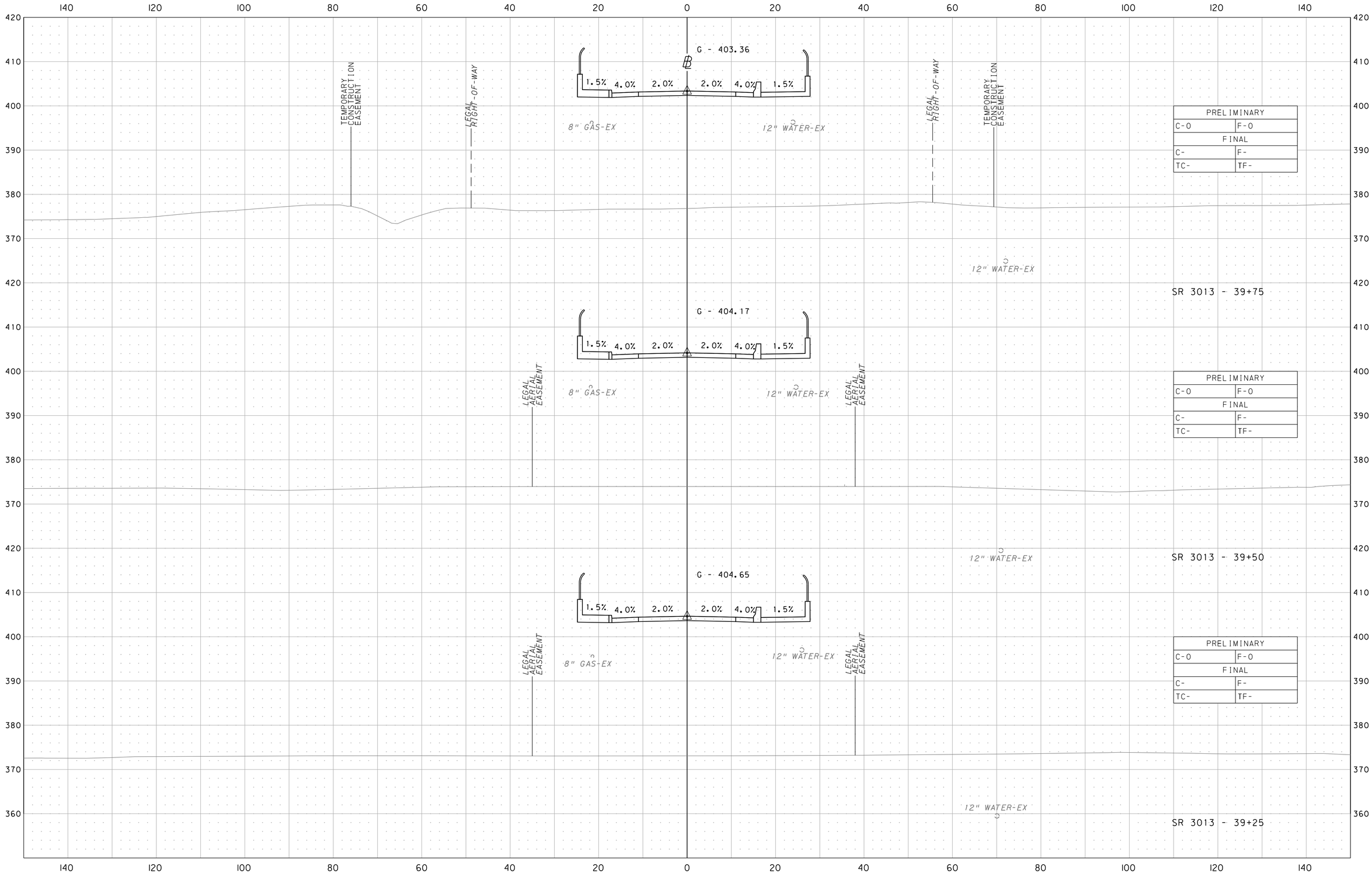

SCALE: 1 INCH = 10 FEET

3/20/2023
FILENAME: 63016_079-s-cv-xs04

PENNSYLVANIA DEPARTMENT OF TRANSPORTATION

CROSS SECTIONS

DISTRICT	COUNTY	ROUTE	SECTION	Prelim. Bk. No.	Final Bk. No.	SHEET
8-0	DAUPHIN	0083	079			334 OF 340

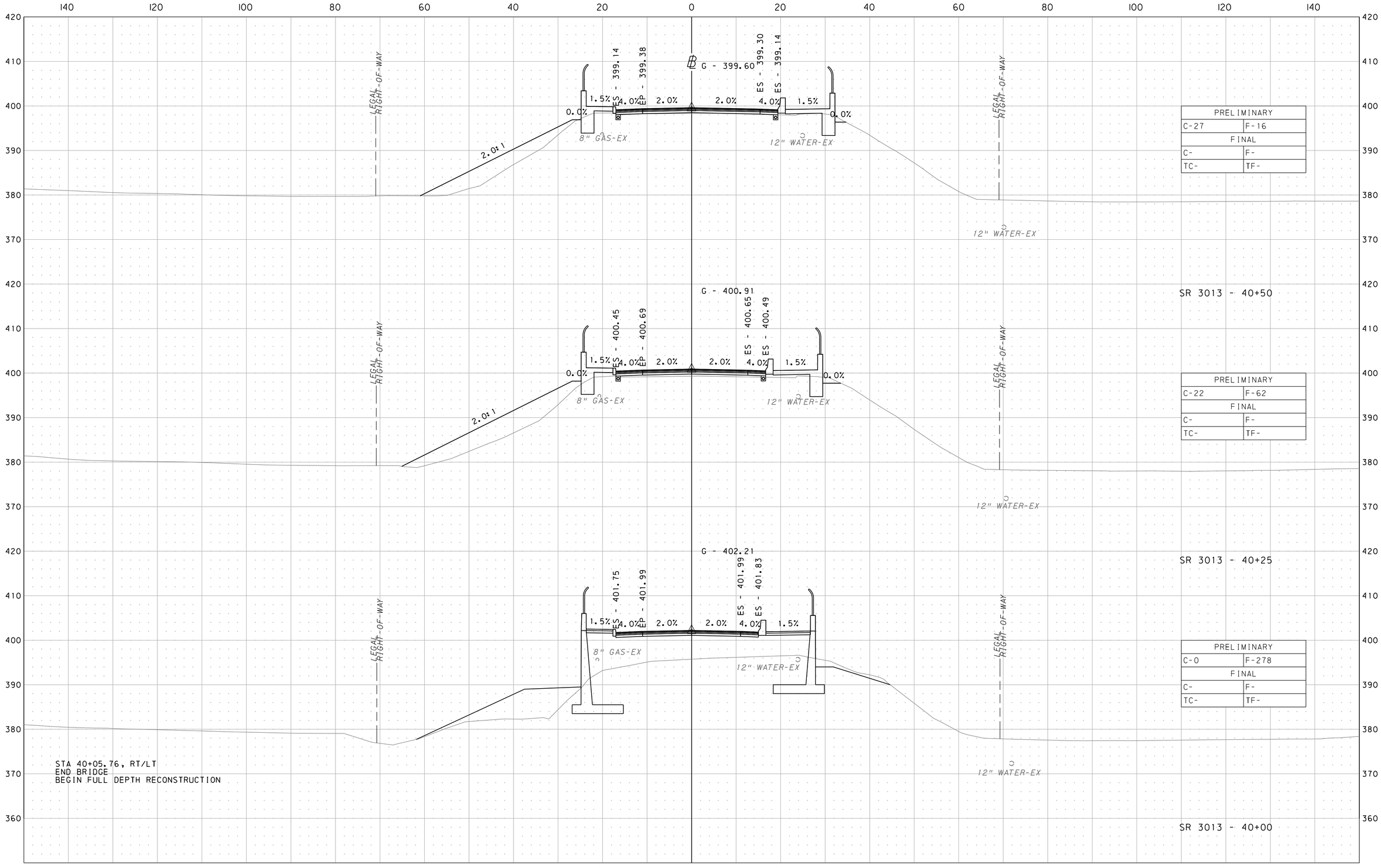

SCALE: 1 INCH = 10 FEET

3/20/2023
FILENAME: 63016_079-s-cv-xs04