PLAN PREPARATION
PENNDOT PROJECT MANAGER - MICHELLE L. MAYS, P.E.

CERTIFIED CORRECT PLANS
Professional Engineer
Approved by Bureau of Technical Utility Services
PA PUBLIC UTILITY COMMISSION
03/19/2024
ATTEST Secretary
Docket: A-2022-3036477

DISTRICT	COUNTY	BOROUGH	TOWNSHIP	ROUTE	SECTION	TOTAL SHEETS
2-0	CLEARFIELD		LAWRENCE	1001	MTF	9

ECMS NO. 115877

ALSO INCLUDED:

TRAFFIC CONTROL PLAN	2 SHEETS
TABULATION SHEETS	2 SHEETS
SIGNING AND PAVEMENT MARKING PLAN	1 SHEET
EROSION AND SEDIMENT POLLUTION CONTROL PLAN	8 SHEETS
STRUCTURE PLAN S-1001RJC	54 SHEETS
RAILROAD PLANS	6 SHEETS
CROSS SECTIONS	9 SHEETS
AIDS TO NAVIGATION PLAN	10 SHEETS

COMMONWEALTH OF PENNSYLVANIA

DEPARTMENT OF TRANSPORTATION

DRAWINGS
FOR
CONSTRUCTION
OF

STATE ROUTE 1001 SECTION MTF
IN CLEARFIELD COUNTY

FROM STA. 15+00.00 TO STA. 22+75.00 LENGTH 675.00 FT. 0.128 MI.
FROM SEG. 0132 OFFSET 0330 TO SEG. 0132 OFFSET 1105

SCALE
HORIZONTAL 0 25 50 FEET
VERTICAL 0 5 10 FEET

LIMITS OF SIGNING
FROM SEG. 0112 OFFSET 0886 TO SEG. 0140 OFFSET 0396

PUC APPLICATION DOCKET NUMBER A-2022-3036477

DESIGN DESIGNATION - SR 1001

HIGHWAY CLASSIFICATION	- MINOR ARTERIAL - URBAN
TYPOLOGY	- COMMUNITY ARTERIAL - RURAL PLACES
DESIGN SPEED	- 35 MPH
PAVEMENT WIDTH	- 2 LANES @ 11'-0"
SHOULDER WIDTH	- 2'-0" RT

TRAFFIC DATA

CURRENT YEAR A.D.T.	- 4.815 (2023)
DESIGN YEAR A.D.T.	- 4,815 (2045)
D.H.V.	- 530 (2045)
D	- 55 %
T	- 2 %

PREPARED BY:
HNTB CORPORATION
4507 N FRONT STREET,
SUITE 300
HARRISBURG, PA 17110

COMMONWEALTH OF PENNSYLVANIA REGISTERED PROFESSIONAL ANDREA LEANNE REEDE ENGINEER 056076-E

DATE: 1/17/24

APPROVED DATE: Jan 24, 2024
R. J. CORMAN RAILROAD

RECOMMENDED DATE: Feb 05, 2024
DISTRICT EXECUTIVE

RECOMMENDED DATE: 02/07/2024
DEPUTY SECRETARY

APPROVED DATE: 02/12/2024
SECRETARY OF TRANSPORTATION
(ON BEHALF OF THE GOVERNOR
AS WELL AS THE SECRETARY)

DISTRICT	COUNTY	ROUTE	SECTION	SHEET
2-0	CLEARFIELD	1001	MTF	2 OF 9
LAWRENCE TOWNSHIP				

REVISION NUMBER	REVISIONS	DATE	BY	APPROVED

LIST OF EXISTING ROADWAY TYPES

ROUTE		TYPE
SR 1001	LIMIT OF WORK TO SEG 0132 OFFSET 0950	22' OF 2" SUPERPAVE HMA WEARING COURSE, 64-22, 9.5 MM; ON: 22' OF 1.25" BITUMINOUS WEARING COURSE; ON: 1' OF 1" BITUMINOUS WEARING COURSE ON 4" BITUMINOUS CONCRETE BASE (EACH SHOULDER); AND: 20' OF 6.75" BITUMINOUS WEARING COURSE; ON: 3' OF 8" CRUSHED AGGREGATE BASE COURSE (EACH SHOULDER); AND: 14' OF 1" BITUMINOUS WEARING COURSE; ON: 14' OF 6" NATIVE STONE GRANULAR SUBBASE
	SEG 0132 OFFSET 0950 TO LIMIT OF WORK	22' OF 2" SUPERPAVE HMA WEARING COURSE, 64-22, 9.5 MM; ON: 22' OF 1.25" BITUMINOUS WEARING COURSE; ON: 1' OF 1" BITUMINOUS WEARING COURSE ON 4" BITUMINOUS CONCRETE BASE (EACH SHOULDER); AND: 20' OF 7.25" BITUMINOUS WEARING COURSE; ON: 20' OF 10" CRUSHED AGGREGATE BASE COURSE

NOTE: THE DEPTHS OF MATERIALS SHOWN ARE FOR DESIGN PURPOSES ONLY. ANY RISK OF UNANTICIPATED COST ASSOCIATED WITH DIFFERENCES BETWEEN THE LISTED DEPTHS AND THE ACTUAL DEPTHS SHALL BE ACCEPTED BY THE CONTRACTOR.

LIST OF SEGMENT EQUALITIES

SR 1001
LIMIT OF SIGNING
SEG 0112 OFFSET 0886 = STA 7+60.00
SEG 0132 OFFSET 0000 = STA 11+70.00
LIMIT OF WORK
SEG 0132 OFFSET 0330 = STA 15+00.00
SEG 0132 OFFSET 0701 = STA 18+71.90
SEG 0132 OFFSET 1030 = STA 22+00.00
LIMIT OF WORK
SEG 0140 OFFSET 0000 = STA 28+34.00
SEG 0140 OFFSET 0396 = STA 32+30.00
LIMIT OF SIGNING

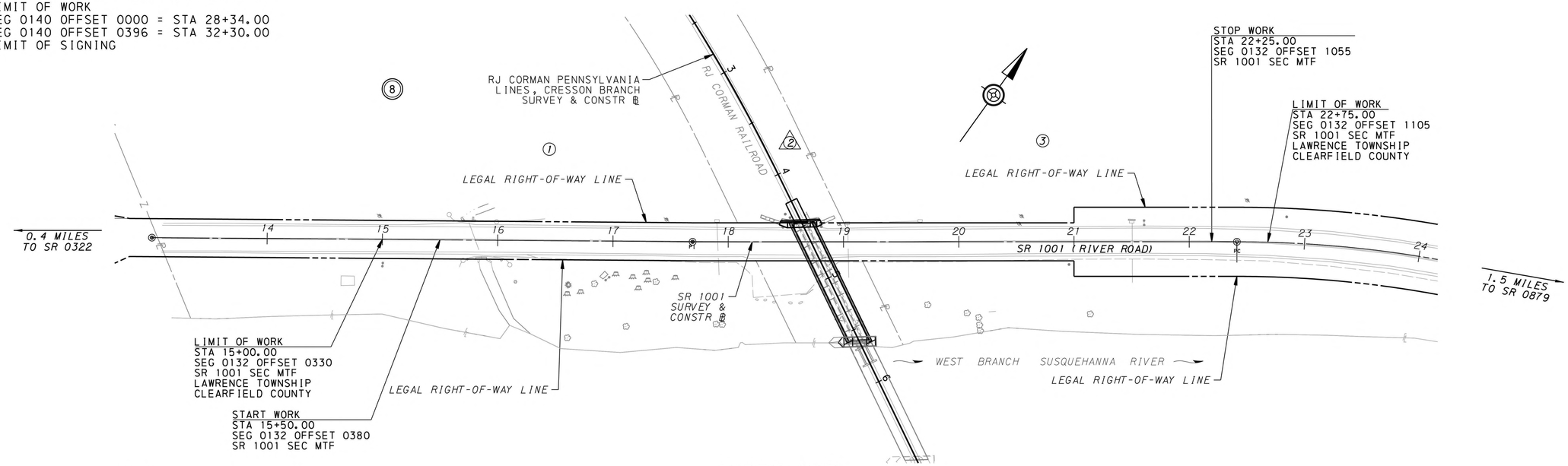

INDEX MAP

SCALE
0 50 100 FEET

LEGEND

- PLAN
- PARCEL IDENTIFICATION NUMBER
- PARCEL IDENTIFICATION NUMBER (NO TAKE)

LIST OF PROPERTY OWNERS

(1) *MICHAEL L. TIBBENS AND DAWN M. TIBBENS, HUSBAND AND WIFE*

(2) *RJ CORMAN RAILROAD COMPANY/PENNSYLVANIA LINES INC., A CORPORATION OF THE COMMONWEALTH OF PENNSYLVANIA*

(3) *BRIAN LYNN HUBLER, SR., AN INDIVIDUAL, ELIZABETH L. HUBLER, AN INDIVIDUAL, AND WALTER LEE HUBLER, JR., AN INDIVIDUAL AS TENANTS IN COMMON*

SHEET INDEX BLOCK

DESCRIPTION	SHEET
TITLE SHEET	1
INDEX MAP	2
GENERAL NOTES AND LOCATION MAP	3
TYPICAL SECTION	4
SUMMARY SHEET	5
TAB SHEETS	6-7
CONSTRUCTION PLAN	8
PROFILE SHEET	9

COMMONWEALTH OF PENNSYLVANIA REGISTERED PROFESSIONAL ENGINEER ANDREA HEATHER REEDE 050070-E

8/4/2023
FILENAME: 63948-W036-s-cv-idx01.dgn

DISTRICT	COUNTY	ROUTE	SECTION	SHEET
2-0	CLEARFIELD	1001	MTF	3 OF 9
LAWRENCE TOWNSHIP				

REVISION NUMBER	REVISIONS	DATE	BY	APPROVED

TABULATION OF OVERALL LENGTH

SR 1001 STA 15+00.00 TO STA 22+75.00 = 775.00 FT = 0.147 MI

TABULATION OF CONSTRUCTION LENGTH

SR 1001 STA 15+50.00 TO STA 22+25.00 = 675.00 FT = 0.128 MI

EQUALITIES

NONE

LIST OF PUBLIC UTILITIES

E	PENELEC	820 SOUTH FOURTH STREET CLEARFIELD, PA 16830	CODY TRABERT	PHONE: 814-421-9617 EMAIL: CTRABERT@FIRSTENERGYCORP.COM
T, TU	VERIZON PENNSYLVANIA, LLC	1119 16TH STREET ALTOONA, PA 16601	RICHARD LAMPENFELD	PHONE: 814-946-5909 EMAIL: RICHARD.M.LAMPENFELD@VERIZON.COM
CTV	BREEZELINE	313½ E. CHERRY STREET CLEARFIELD, PA 16830	MATT JOHNSTON	PHONE: 814-288-7856 EMAIL: MJOHNSTON@BREEZELINE.COM
G	UGI UTILITIES, INC	511 EAST NORTHAMPTON STREET WILKES-BARRE, PA 18711	ROY CARR	PHONE: 570-829-8967 EMAIL: RCARR@UGI.COM
W, S	CLEARFIELD MUNICIPAL AUTHORITY	107 E. MARKET STREET CLEARFIELD, PA 16830	RICHARD LOPEZ	PHONE: 814-765-9609 EMAIL: RLOPEZ@CLEARFIELDWATERSEWER.COM

THE PA ONE CALL NOTIFICATIONS PERFORMED DURING PROJECT DEVELOPMENT ARE AS FOLLOWS:

PRELIMINARY DESIGN SERIAL NO. 20210140975 ON JANUARY 14, 2021 FOR LAWRENCE TOWNSHIP.

PRELIMINARY DESIGN SERIAL NO. 20210140988 ON JANUARY 14, 2021 FOR CLEARFIELD BOROUGH.

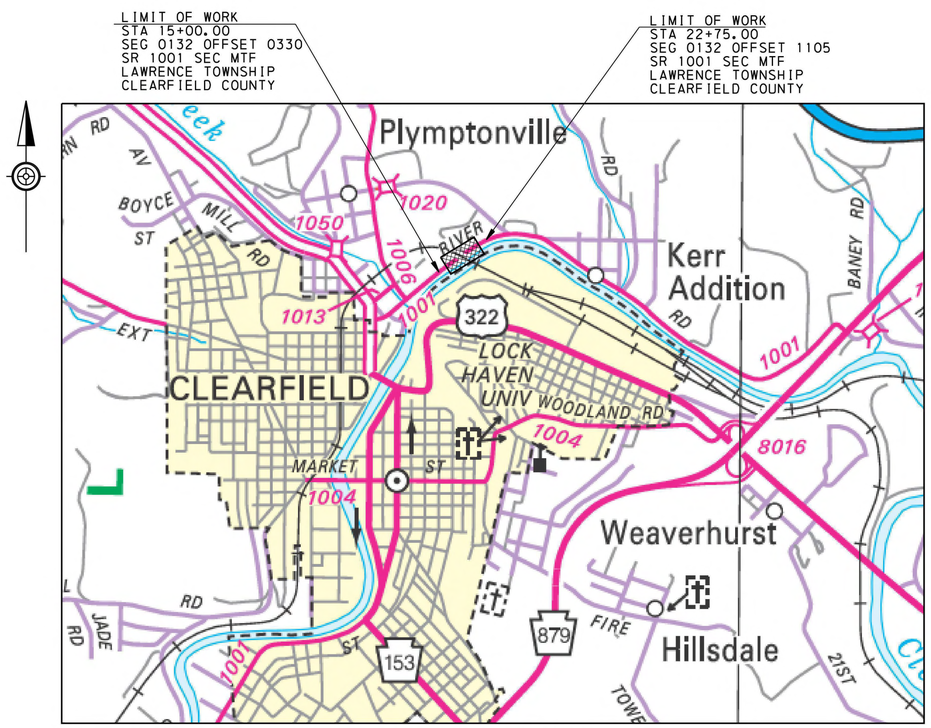

LOCATION MAP

SCALE IN MILES

1/4 0 1/4 1/2

LEGEND

- PROJECT AREA
- STATE HIGHWAY
- LOCAL ROAD
- MUNICIPAL BOUNDARY

SUMMARY OF PROJECT COORDINATES

BASED ON PENNSYLVANIA STATE PLANE COORDINATE SYSTEM (NORTH ZONE), NORTH AMERICAN DATUM (NAD) 1983 (2011)

RTE	POINT	STATION	COORDINATES NORTH	COORDINATES EAST	BEARING
RJ CORMAN PENNSYLVANIA LINES, CRESSON BRANCH SURVEY & CONSTR ℄	POB (PC)	0+00.00	316485.616	1779353.4183	
					S 82°14'16" E
	PI(C)	0+85.00	316474.1346	1779437.6461	
					S 71°39'21" E
	CS	1+69.53	316447.3811	1779518.3332	
					S 71°39'21" E
	PI(S)	1+98.67	316438.2093	1779545.0045	
					S 68°22'41" E
	SC	2+31.53	316426.0957	1779576.5558	
					S 68°22'41" E
	PI(C)	2+89.74	316404.6411	1779630.6755	
					S 63°20'13" E
	CS	3+47.88	316378.5201	1779682.7010	
					S 63°20'13" E
	PI(S)	3+78.89	316364.6075	1779710.4077	
					S 61°19'21" E
	ST	4+40.88	316334.853	1779764.8060	
					S 61°19'21" E
	POE	6+86.30	316217.0833	1779980.1175	

RTE	POINT	STATION	COORDINATES NORTH	COORDINATES EAST	BEARING
SR 1001 SURVEY & CONSTR ℄	POB	13+00.00	315994.2892	1779318.3454	
					N 54°57'37" E
	PI	17+69.12	316263.6347	1779702.4418	
					N 54°31'17" E
	PC	22+41.32	316537.6967	1780086.9667	
					N 54°31'17" E
	PI	25+79.60	316734.0362	1780362.4424	
					S 87°59'23" E
	PT	28+93.58	316722.1694	1780700.5181	
					S 87°59'23" E
	PC	29+77.33	316719.1855	1780785.5258	
					S 87°59'23" E
	PI	30+45.60	316716.7904	1780853.7612	
					S 80°29'34" E
	PT	31+13.69	316705.5128	1780921.1008	

NOTE: FOUR (4) PLACE COORDINATES ARE USED FOR COMPUTATIONAL PURPOSES ONLY AND DO NOT IMPLY A PRECISION BEYOND TWO (2) PLACES.

EARTHWORK SUMMARY ENTIRE PROJECT

THE INFORMATION ON ESTIMATED AMOUNTS OF EARTHWORK HAS BEEN USED IN THE 90% ESTIMATE. DO NOT USE AS A WAIVER OF ANY PROVISIONS OF THE SPECIFICATIONS AND CONTRACTS.

CUBIC YARDS OF EXCAVATION						CUBIC YARDS OF TEMPORARY CAUSEWAY****	CUBIC YARDS OF SELECT BORROW	CUBIC YARDS OF WASTE
CLASS 1*	CLASS 1A	CLASS 1B	CLASS 2*	CLASS 3***	CLASS 4			
2743	-	-	35	220	-	2743	-	2743

* INCLUDES ALL EXCAVATION PERTINENT TO TEMPORARY CAUSEWAY REMOVAL
** INCLUDES ALL EXCAVATION PERTINENT TO REMOVAL OF TEMPORARY PIPE EXTENSIONS
*** 220 CY PART OF LUMP SUM STRUCTURE ITEM
**** INCLUDES ROCK, CLASS R-7, CHOKED WITH ROCK, CLASS R-3, OVERLAID WITH 4" NO. 57 STONE FOR THE CONSTRUCTION OF TEMPORARY CAUSEWAY

GENERAL NOTES

THE LEGAL RIGHT-OF-WAY ON SR 1001, FORMERLY KNOWN AS LR 17052, ALSO KNOWN AS RIVER ROAD IS 33 FEET IN WIDTH FROM STATION 13+00.00 TO STATION 21+00.00 BASED ON ROAD DOCKET NO. 5 DATED NOVEMBER 1808, QUARTER SESSIONS DOCKET NO. 2, PAGE 43. CONFIRMED BY COURT NOVEMBER 27, 1807, EXCEPT AS DESCRIBED IN THE FOLLOWING NOTE.

THE LEGAL RIGHT-OF-WAY ON SR 1001, FORMERLY KNOWN AS LR 17052, ALSO KNOWN AS RIVER ROAD IS 28 FEET ON THE LEFT FROM STATION 15+56.00 TO STATION 16+47.00, AND 28 FEET ON THR RIGHT FROM STATION 15+62.00 TO STATION 16+17.00 BASED ON THE PLAN FOR SR 1001, SECTION MTF, SIGNED BY THE ACTING SECRETARY OF TRANSPORTATION ON FEBRUARY 15, 2023, AND RECORDED MARCH 15, 2023 IN THE CLEARFIELD COUNTY RECORDER OF DEEDS OFFICE AS INSTRUMENT NUMBER 202302926.

THE LEGAL RIGHT-OF-WAY ON SR 1001, FORMERLY KNOWN AS LR 17052, ALSO KNOWN AS RIVER ROAD IS VARIABLE IN WIDTH FROM STATION 21+00.00 TO STATION 31+13.69 BASED ON THE PLAN FOR LR 17052 SECTION NO. 6, SIGNED BY THE GOVERNOR ON AUGUST 14, 1964 AND RECORDED IN THE CLEARFIELD RECORDERS OF DEEDS ON AUGUST 21, 1964.

DRAINAGE EASEMENT. AN EASEMENT FOR THE CONSTRUCTION, INSPECTION, MAINTENANCE, REPAIR, RECONSTRUCTION AND ALTERATION OF HIGHWAY DRAINAGE FACILITIES. THE EASEMENT SHALL NOT PREVENT THE PROPERTY OWNER FROM MAKING ANY LEGAL USE OF THE AREA WHICH IS NOT DETRIMENTAL TO THE NECESSARY FLOW OF WATER. HOWEVER, NO STRUCTURE OF ANY KIND MAY BE ERECTED IN THE AREA, NOR MAY ANY PIPE OR DITCH BE CONNECTED TO THE DEPARTMENT'S PIPE OR DITCH WITHOUT ADVANCED WRITTEN APPROVAL BY THE DEPARTMENT OF TRANSPORTATION.

TEMPORARY CONSTRUCTION EASEMENT. AN EASEMENT TO USE THE LAND AS NECESSARY DURING CONSTRUCTION OF THE PROJECT. THE EASEMENT IS REQUIRED ONLY UNTIL THE CONSTRUCTION OR WORK INDICATED BY THE PLAN IS COMPLETED, UNLESS SOONER RELINQUISHED IN WRITING BY THE DEPARTMENT.

DO NOT INTERFERE WITH THE OPERATION OF ANY FIRE HYDRANT, FIRE CALL BOX OR POLICE CALL BOX.

THREE TO TEN WORKING DAYS PRIOR TO EXCAVATION BASED ON THE COMPLEXITY OF THE PROJECT, THE CONTRACTOR MUST CONTACT THE PA ONE CALL SYSTEM, INC., PHONE 1-800-242-1776, SERIAL NO. ---------- FOR LAWRENCE TOWNSHIP. ADDITIONAL INFORMATION IS AVAILABLE AT https://www.palcall.org/PA811/Public/.

THE CONTRACTOR IS REQUIRED TO NOTIFY THE DEPARTMENT AND SUBMIT AN ALLEGED VIOLATION REPORT (AVR) TO THE PA PUBLIC UTILITY COMMISSION THROUGH THE PA ONE CALL SYSTEM, WWW.PA1CALL.ORG, WITHIN TEN (10) BUSINESS DAYS AFTER A UTILITY LINE IS STRUCK, DAMAGED, OR PREVIOUS DAMAGE IS DISCOVERED AS REQUIRED BY PENNSYLVANIA'S UNDERGROUND UTILITY LINE PROTECTION LAW ACT 5 (P.L.852, NO. 287 AMENDED OCT. 30, 2017).

THE HORIZONTAL CONTROL IS TIED TO THE PENNSYLVANIA STATE PLANE COORDINATE SYSTEM (NORTH ZONE), NORTH AMERICAN DATUM (NAD) 1983 (2011), BASED ON GPS OBSERVATIONS FEBRUARY 2021.

ROADWAY ALIGNMENTS ARE ARC DEFINITION, AND RAILROAD ALIGNMENTS ARE CHORD DEFINITION.

THE VERTICAL DATUM IS NAVD 1988, AS ESTABLISHED BY GPS OBSERVATIONS FEBRUARY 2021.

AVERAGE COMBINED FACTOR = 0.99993189

THE PENNSYLVANIA DEPARTMENT OF TRANSPORTATION DOES NOT GUARANTEE THE ACCURACY OF THE LOCATION OF THE EXISTING SUBSURFACE UTILITY STRUCTURES SHOWN ON THE PLANS. NEITHER DOES THE DEPARTMENT GUARANTEE THAT ALL SUBSURFACE STRUCTURES ARE SHOWN.

WEST BRANCH SUSQUEHANNA RIVER IS A NAVIGABLE WATERWAY THROUGHOUT THE LIMITS OF THIS PROJECT. THE PROJECT AREA MAY BE INSPECTED AT ANY TIME BY THE PENNSYLVANIA FISH AND BOAT COMMISSION TO ENSURE COMPLIANCE WITH THE ATON PLAN.

DETAILS, OTHER THAN THOSE INDICATED, ARE ON THE FOLLOWING STANDARD DRAWINGS:

BC-734M	FEB 19, 2021
BC-735M	SEP 30, 2016
BC-736M	NOV 23, 2022
BC-751M	JAN 31, 2019
BC-788M	NOV 23, 2022
RC-10M	JUN 01, 2010
RC-11M	JUN 01, 2010
RC-12M	NOV 01, 2022
RC-14M	NOV 01, 2022
RC-32M	JUN 01, 2010
RC-70M	FEB 08, 2019
RC-72M	FEB 08, 2019
RC-84M	JUN 01, 2010
TC-8701S	JUN 13, 2013
TC-8702B	JUN 13, 2013
TC-8716	JUN 13, 2013
TC-8717	JUN 13, 2013

COMMONWEALTH OF PENNSYLVANIA REGISTERED PROFESSIONAL ANDREA HEATHER REEDE ENGINEER 056076-E

2/15/2024
FILENAME: 63948-W036-s-cv-gen01.dgn

DISTRICT	COUNTY	ROUTE	SECTION	SHEET
2-0	CLEARFIELD	1001	MTF	4 OF 9
LAWRENCE TOWNSHIP				

REVISION NUMBER	REVISIONS	DATE	BY	APPROVED

LEGEND

Ⓐ SUPERPAVE ASPHALT MIXTURE DESIGN, WEARING COURSE, PG 64S-22, 0.3 TO <3 MILLION ESALS, 9.5 MM MIX, 1 1/2" DEPTH, SRL-H

Ⓑ SUPERPAVE ASPHALT MIXTURE DESIGN, WEARING COURSE (SCRATCH), PG 64S-22, 0.3 TO <3 MILLION ESALS, 9.5 MM MIX, SRL-H (1/2" DEPTH)

Ⓒ MILLING OF ASPHALT PAVEMENT SURFACE, 2" DEPTH, MILLED MATERIAL RETAINED BY CONTRACTOR

NOTE: PROVIDE TACK COAT BETWEEN EACH PAVEMENT LAYER IN ACCORDANCE WITH PUB. 408, SEC. 460.

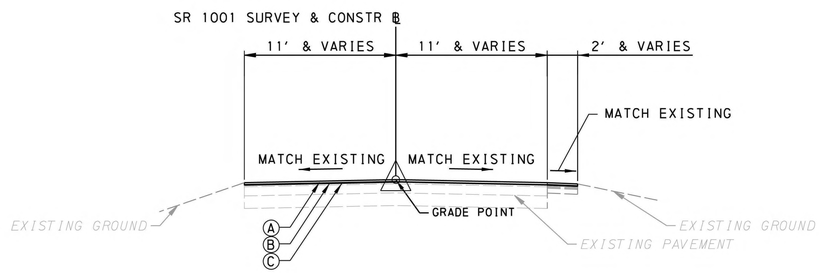

SR 1001 (RIVER ROAD)
STA 16+50.00 TO STA 22+00.00
NOT TO SCALE

TYPICAL SECTION
SR 1001

COMMONWEALTH OF PENNSYLVANIA
REGISTERED PROFESSIONAL
ANDREA HEATHER REEDE
ENGINEER
069079-E

8/4/2023
FILENAME: 63948-WO36-s-cv-typ01.dgn

TCP = TRAFFIC CONTROL PLAN
STR = STRUCTURE PLAN
TK = TRACK PLAN
♦ - SEE SPECIAL PROVISIONS

SUMMARY

ATON = AIDS TO NAVIGATION PLAN

REVISION NO	REVISIONS	DATE	BY	DISTRICT	COUNTY	ROUTE	SECTION	SHEET
				02	CLEARFIELD	1001	MTF	5 OF 9
				LAWRENCE TOWNSHIP				

QUANTITY	ITEM NO / UNIT	DESCRIPTION	DESIGN NO	FOR TAB SEE SHEET	QUANTITY	ITEM NO / UNIT	DESCRIPTION	DESIGN NO	FOR TAB SEE SHEET	QUANTITY	ITEM NO / UNIT	DESCRIPTION	DESIGN NO	FOR TAB SEE SHEET	QUANTITY	ITEM NO / UNIT	DESCRIPTION	DESIGN NO	FOR TAB SEE SHEET
	4201 0001 LS	CLEARING AND GRUBBING, EXCLUDING TOPSOIL REMOVAL ♦		NO TAB	146	0804 0025 LB	SEEDING AND SOIL SUPPLEMENTS - FORMULA B RESIDENTIAL MIX, INCLUDING MULCH		7	OR	8100 0001 LS	STEEL BRIDGE STRUCTURE ♦	1	STR					
2743	0203 0001 CY	CLASS 1 EXCAVATION		7	10	0804 0032 LB	SEEDING - FORMULA T TEMPORARY GRASS MIX, INCLUDING MULCH		7										
35	0204 0001 CY	CLASS 2 EXCAVATION		7	10	0810 0052 EACH	SELECTIVE TREE REMOVAL		6	30	9000 0001 LF	TRACK CONSTRUCTION, BALLASTED TRACK FULL DEPTH CONSTRUCTION ♦		TK					
6714	0212 0014 SY	GEOTEXTILE, CLASS 4, TYPE A		7	1000	0845 0001 DOLLA	UNFORESEEN WATER POLLUTION CONTROL		NO TAB	30	9000 0002 LF	TRACK CONSTRUCTION, BALLASTED TRACK PARTIAL DEPTH CONSTRUCTION ♦		TK					
					2	0849 0010 EACH	ROCK CONSTRUCTION ENTRANCE		7	122	9000 0003 LF	TRACK CONSTRUCTION, DIRECT FIXATION TRACK CONSTRUCTION ♦		TK					
134	0316 0434 SY	SUPERPAVE ASPHALT MIXTURE DESIGN, FLEXIBLE BASE REPLACEMENT, PG 64S-22, 0.3 TO < 3 MILLION ESALS, 25.0 MM MIX, 10" DEPTH		6	848	0850 0031 CY	ROCK, CLASS R-3		7	376	9000 0004 LF	TRACK CONSTRUCTION, RAIL REPLACEMENT ♦		TK					
1436	0413 0245 SY	SUPERPAVE ASPHALT MIXTURE DESIGN, WEARING COURSE, PG 64S-22, 0.3 TO < 3 MILLION ESALS, 9.5 MM MIX, 1 1/2" DEPTH, SRL-H		6	1570	0850 0035 CY	ROCK, CLASS R-7		7		9000 0005 LS	TRACK CONSTRUCTION, FINAL TRACK SURFACING ♦		TK					
43	0413 1021 TON	SUPERPAVE ASPHALT MIXTURE DESIGN, WEARING COURSE (SCRATCH), PG 64S-22, 0.3 TO < 3 MILLION ESALS, 9.5 MM MIX, SRL-H		6	1	0855 0003 EACH	PUMPED WATER FILTER BAG		7		9000 0006 LS	TRACK CONSTRUCTION, OPEN DECK TRACK CONSTRUCTION ♦		TK					
3142	0460 0001 SY	ASPHALT TACK COAT		6	3	0860 0000 EACH	INLET FILTER BAG FOR TYPE M INLET		7		9000 0007 LS	IMPLEMENT AND MAINTAIN AIDS TO NAVIGATION (ATON) PLAN ♦		ATON					
1436	0491 0013 SY	MILLING OF ASPHALT PAVEMENT SURFACE, 2" DEPTH, MILLED MATERIAL RETAINED BY CONTRACTOR		6	1	0860 0002 EACH	INLET FILTER BAG FOR TYPE C INLET		7	12	9000 0008 EACH	UTILITY TEST PIT ♦		NO TAB					
					540	0867 0018 LF	COMPOST FILTER SOCK, 18" DIAMETER		7	307	9000 0010 LF	5" SCHEDULE 40 PVC CONDUIT, INCLUDING TRENCH AND BACKFILL ♦		6					
41	0601 0352 LF	15" THERMOPLASTIC PIPE, GROUP III, 8'-2' FILL		7							9203 0101 LS	TEMPORARY EXCAVATION SUPPORT AND PROTECTION SYSTEM, S-1001RJC ♦		STR					
141	0601 0353 LF	18" THERMOPLASTIC PIPE, GROUP III, 8'-2' FILL		7		0901 0001 LS	MAINTENANCE AND PROTECTION OF TRAFFIC DURING CONSTRUCTION ♦		NO TAB										
	0608 0001 LS	MOBILIZATION		NO TAB	28	0901 0231 DAY	ADDITIONAL WARNING LIGHTS, TYPE B		TCP										
	0609 0007 LS	INSPECTOR'S FIELD OFFICE AND INSPECTION FACILITIES, TYPE B		NO TAB	100	0901 0240 SF	ADDITIONAL TRAFFIC CONTROL SIGNS		TCP										
	0609 0009 LS	EQUIPMENT PACKAGE ♦		NO TAB	6	0931 0001 SF	POST MOUNTED SIGNS, TYPE B		SPM										
1	0618 0021 EACH	CONCRETE COLLAR FOR 15" PIPE EXTENSION		7	1	0941 0001 EACH	RESET POST MOUNTED SIGNS, TYPE B		SPM										
2	0618 0022 EACH	CONCRETE COLLAR FOR 18" PIPE EXTENSION		7	2200	0962 1000 LF	4" WHITE WATERBORNE PAVEMENT MARKINGS		SPM										
	0686 0050 LS	CONSTRUCTION SURVEYING, TYPE D		NO TAB	2200	0962 1005 LF	4" YELLOW WATERBORNE PAVEMENT MARKINGS		SPM										
	0689 0003 LS	CPM SCHEDULE		NO TAB	6	0971 0001 EACH	REMOVE POST MOUNTED SIGNS, TYPE B		SPM										
1000	0690 0001 DOLLA	INTERNAL FACILITATION		NO TAB	2	0972 0001 EACH	REMOVE POST MOUNTED SIGNS, TYPE C		SPM										
340	0703 0025 CY	NO. 57 COARSE AGGREGATE		7	EITHER	8120 0001 LS	BRIDGE STRUCTURE, AS DESIGNED, S-1001RJC ♦	1	STR										
					AND 700	1002 0073 LB	REINFORCEMENT BARS, GALVANIZED	1	STR										

COMMONWEALTH OF PENNSYLVANIA
REGISTERED PROFESSIONAL
ANDREA HEATHER REEDE
ENGINEER
054076-E

TABULATION OF QUANTITIES

ROADWAY

REVISION NO	REVISIONS	DATE	BY	DISTRICT	COUNTY	ROUTE	SECTION	SHEET
				02	CLEARFIELD	1001	MTF	6 OF 9
				LAWRENCE TOWNSHIP				

COMMONWEALTH OF PENNSYLVANIA
REGISTERED PROFESSIONAL ENGINEER
ANDREA HEATHER REEDE
056076-E

0316 0434 SY	0413 0245 SY	0413 1021 TON	0460 0001 SY	0491 0013 SY	0810 0052 EACH	9000 0010 LF	ITEM NUMBER / UNIT	REMARKS	SIDE	STATIONS
SUPERPAVE ASPHALT MIXTURE DESIGN, FLEXIBLE BASE REPLACEMENT, PG 64S-22, 0.3 TO < 3 MILLION ESALS, 25.0 MM MIX, 10" DEPTH	SUPERPAVE ASPHALT MIXTURE DESIGN, WEARING COURSE, PG 64S-22, 0.3 TO < 3 MILLION ESALS, 9.5 MM MIX, 1 1/2" DEPTH, SRL-H	SUPERPAVE ASPHALT MIXTURE DESIGN, WEARING COURSE (SCRATCH), PG 64S-22, 0.3 TO < 3 MILLION ESALS, 9.5 MM MIX, SRL-H	ASPHALT TACK COAT	MILLING OF ASPHALT PAVEMENT SURFACE, 2" DEPTH, MILLED MATERIAL RETAINED BY CONTRACTOR	SELECTIVE TREE REMOVAL	5" SCHEDULE 40 PVC CONDUIT, INCLUDING TRENCH AND BACKFILL				
								SR 1001		
	1436	43	3142	1436				MILL AND OVERLAY	LT / RT	16+50.00 to 22+00.00
					10			TREE REMOVAL	RT	17+00.00 to 21+20.00
134						307			LT	17+45.00 to 20+50.00
134	1436	43	3142	1436	10	307		TOTALS		

PROJECT ID: 5132 MPMS: 115877 ECMS: 115877 2/14/2024 12:12:26 PM

TABULATION OF QUANTITIES
EROSION AND SEDIMENT POLLUTION CONTROL

REVISION NO	REVISIONS	DATE	BY	DISTRICT	COUNTY	ROUTE	SECTION	SHEET
				02	CLEARFIELD	1001	MTF	7 OF 9
				LAWRENCE TOWNSHIP				

COMMONWEALTH OF PENNSYLVANIA
REGISTERED PROFESSIONAL
KENNETH PAUL OTT
ENGINEER
PE081015

CLASS 1 EXCAVATION		CLASS 2 EXCAVATION		GEOTEXTILE, CLASS 4, TYPE A		15" THERMOPLASTIC PIPE, GROUP III, 8'-2' FILL		18" THERMOPLASTIC PIPE, GROUP III, 8'-2' FILL		CONCRETE COLLAR FOR 15" PIPE EXTENSION		CONCRETE COLLAR FOR 18" PIPE EXTENSION		NO. 57 COARSE AGGREGATE		SEEDING AND SOIL SUPPLEMENTS - FORMULA B RESIDENTIAL MIX, INCLUDING MULCH		SEEDING - FORMULA T TEMPORARY GRASS MIX, INCLUDING MULCH		ROCK CONSTRUCTION ENTRANCE		ROCK, CLASS R-3		ROCK, CLASS R-7		PUMPED WATER FILTER BAG		INLET FILTER BAG FOR TYPE M INLET		INLET FILTER BAG FOR TYPE C INLET		COMPOST FILTER SOCK, 18" DIAMETER		REMARKS	SIDE	STATIONS
0203 0001	CY	0204 0001	CY	0212 0014	SY	0601 0352	LF	0601 0353	LF	0618 0021	EACH	0618 0022	EACH	0703 0025	CY	0804 0025	LB	0804 0032	LB	0849 0010	EACH	0850 0031	CY	0850 0035	CY	0855 0003	EACH	0860 0000	EACH	0860 0002	EACH	0867 0018	LF	ITEM NUMBER / UNIT		
																																		SR 1001		
																146		10								1								ENTIRE PROJECT	RT	16+78.00 to 21+88.00
																																540			RT	16+89.00 to 21+99.00
2743				6666										340								847		1556										TEMPORARY CAUSEWAY INSTALLATION AND REMOVAL	RT	17+00.00 to 21+62.00
																				1															RT	17+40.00
																												1							LT	17+90.00
				17																				5										ROCK OUTLET	RT	17+92.00
		12				62			1																									TEMPORARY PIPE INSTALLATION AND REMOVAL	RT	17+92.00 to 18+10.00
																												1							LT	19+03.00
		25																						9										ROCK OUTLET	RT	19+04.00
		16				79			1																									TEMPORARY PIPE INSTALLATION AND REMOVAL	RT	19+04.00 to 19+61.00
																												1							LT	19+66.00
																				1															RT	19+88.00
		7				41				1																								TEMPORARY PIPE INSTALLATION AND REMOVAL	RT	21+50.00 to 21+50.00
																														1					LT	21+51.00
				6																		1												ROCK OUTLET	RT	21+51.00
2743	35	6714	41	141	1	2	340	146	10	2	848	1570	1	3	1	540																		TOTALS		

PROJECT ID: 5132 MPMS: 115877 ECMS: 115877 8/1/2023 2:40:29 PM

DISTRICT	COUNTY	ROUTE	SECTION	SHEET
2-0	CLEARFIELD	1001	MTF	8 OF 9
LAWRENCE TOWNSHIP				

REVISION NUMBER	REVISIONS	DATE	BY	APPROVED

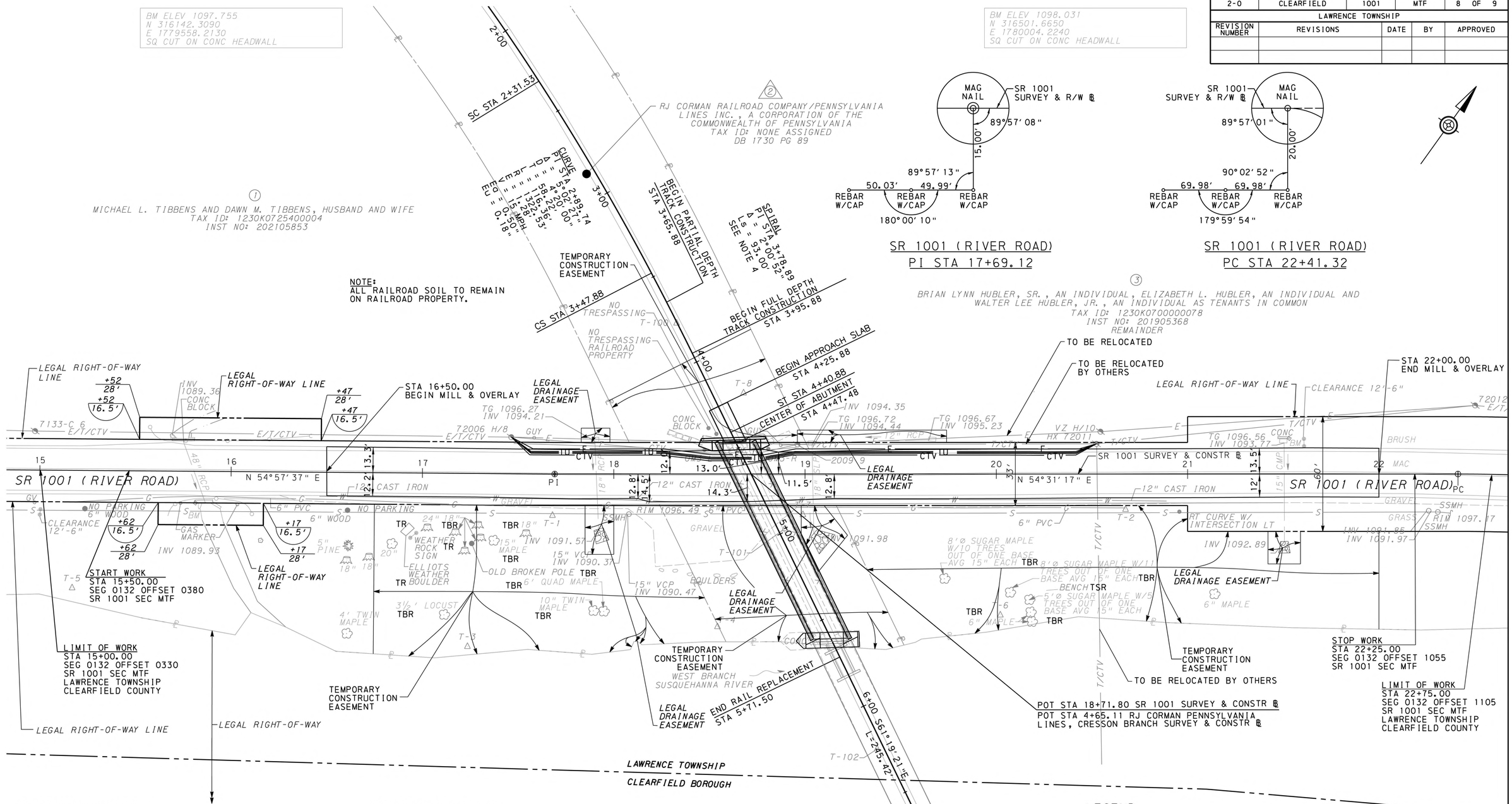

PROPOSED STRUCTURE DATA

RJ CORMAN RAILROAD COMPANY OEVR
SR 1001 (RIVER ROAD)
STATION: 4+65.11
TYPE OF STRUCTURE: 3-SPAN STEEL THROUGH PLATE GIRDER & STEEL THROUGH TRUSS BRIDGE
SPAN LENGTHS:
SPAN 1= 112'-1 5/8"
SPAN 2= 111'-11 1/2"
SPAN 3= 111'-11 1/2"
VERTICAL CLEAR:
SR 1001 = 14'-7"
SKEW: 66°00'00"
STRUCTURE NO: S-1001RJC

EXISTING STRUCTURE DATA

RJ CORMAN RAILROAD COMPANY SR 1001 (RIVER ROAD)
STATION: 4+65.11
TYPE OF STRUCTURE: 3-SPAN STEEL THROUGH TRUSS BRIDGE
SPAN LENGTHS:
SPAN 1= 111'-11 1/2"
SPAN 2= 111'-11 1/2"
SPAN 3= 111'-11 1/2"
VERTICAL CLEAR:
SR 1001= 12'-7 1/4"
SKEW: 66°00'00"
STRUCTURE NO: N/A

LEGEND

TBR TO BE REMOVED
TR TO REMAIN AND BE PROTECTED
TSR TO BE REMOVED, STORED, AND REINSTALLED
ROCK APRON

SCALE
0 25 50 FEET

REGISTERED PROFESSIONAL ENGINEER
ANDREA HEATHER REEDE
ENGINEER 056076-E

SURVEY BOOK NO. 24838

FOR PROFILE, SEE SHEET 9

2/14/2024
FILENAME: 63948-W036-s-cv-pln101.dgn

DISTRICT	COUNTY	ROUTE	SECTION	SHEET
2-0	CLEARFIELD	1001	MTF	9 OF 9
LAWRENCE TOWNSHIP				

REVISION NUMBER	REVISIONS	DATE	BY	APPROVED

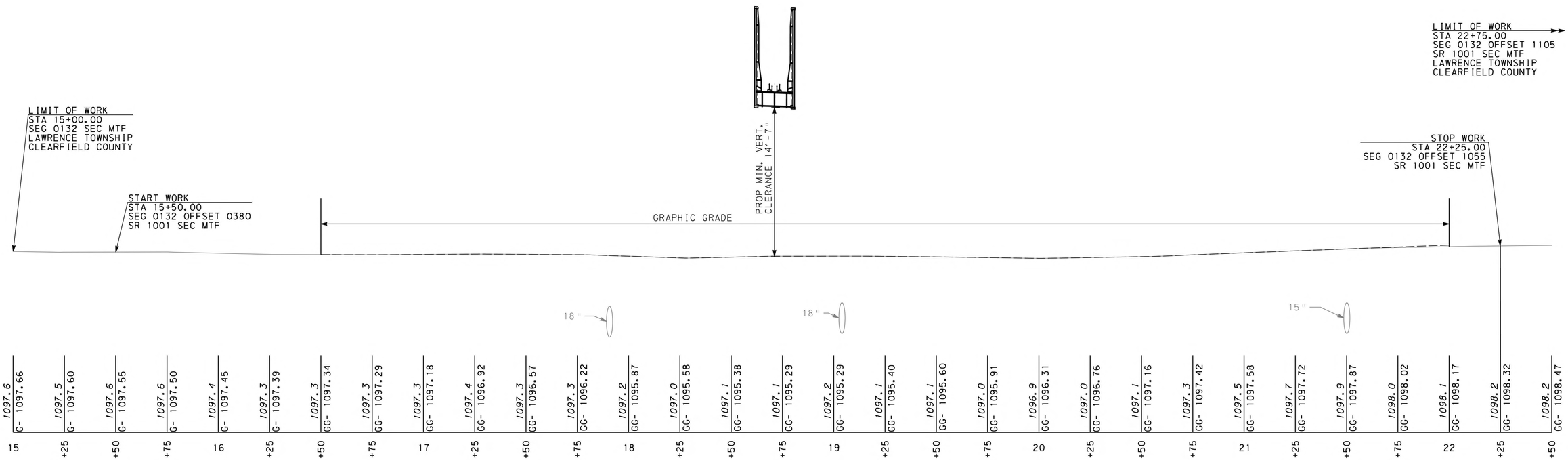

SR 1001

SCALE

0 25 50 FEET

FOR PLAN, SEE SHEET 8

8/4/2023
FILENAME: 63948-W036-s-cv-prf101.dgn

DISTRICT	COUNTY	ROUTE	SECTION	SHEET
2-0	CLEARFIELD	1001	MTF	1 OF 2
LAWRENCE TOWNSHIP				

REVISION NUMBER	REVISIONS	DATE	BY	APPROVED

GENERAL NOTES:

THIS WORK CONSISTS OF THE MAINTENANCE OF TRAFFIC AND THE PROTECTION OF THE TRAVELING PUBLIC APPROACHING THE CONSTRUCTION AREA, WITHIN THE LIMITS OF CONSTRUCTION, AND ON APPROVED DETOURS.

FURNISH, ERECT, PLACE, AND MAINTAIN THE TRAFFIC CONTROL SIGNS AND DEVICES, AND MAINTAIN TRAFFIC DURING HOURS OF CONSTRUCTION AND AT ALL OTHER TIMES IN ACCORDANCE WITH THE METHODS INDICATED ON THESE DRAWINGS AND:

1. THE SPECIAL PROVISIONS OF THE CONTRACT
2. PA CODE, TITLE 67, CHAPTER 212, OFFICIAL TRAFFIC CONTROL DEVICES
3. PENNDOT PUBLICATION 213, TEMPORARY TRAFFIC CONTROL GUIDELINES
4. PENNDOT PUBLICATION 35, QUALIFIED PRODUCTS LIST FOR CONSTRUCTION (BULLETIN 15)
5. PENNDOT PUBLICATION 408/2020, SPECIFICATIONS AND CURRENT INTERIMS
6. FEDERAL HIGHWAY ADMINISTRATION, MANUAL ON UNIFORM TRAFFIC CONTROL DEVICES (MUTCD)
7. PENNDOT PUBLICATION 236, HANDBOOK OF APPROVED SIGNS
8. PENNDOT PUBLICATION 111, TRAFFIC CONTROL PAVEMENT MARKINGS AND SIGNING STANDARDS

IMMEDIATELY UPON COMPLETION OF THE WORK, REMOVE THE DEVICES. UNLESS OTHERWISE SPECIFIED, THEY REMAIN THE PROPERTY OF THE CONTRACTOR. THE DEPARTMENT WILL REMOVE ANY TRAFFIC CONTROL DEVICES ERECTED BY DEPARTMENT FORCES.

THE DISTRICT CONSTRUCTION ENGINEER OR REPRESENTATIVE WILL INSPECT ALL TRAFFIC CONTROL DEVICES PRIOR TO THE START OF WORK.

VEHICLE WIDTH RESTRICTION AND ROUTE MARKER SIGNS WILL BE INSTALLED AT THE BEGINNING OF THE PROJECT. THE INSTALLATION LOCATIONS ARE TO BE APPROVED BY THE DISTRICT CONSTRUCTION ENGINEER OR REPRESENTATIVE.

COVER OR REMOVE ALL SIGNS NOT IN USE OR CONFLICTING TO THE OPERATION BEING PERFORMED. WHEN COVERING EXISTING SIGNS, USE MATERIALS AND PROCEDURES CONSISTENT WITH PUBLICATION 408 SECTION 901.3(a) AND (cc).

THIS TRAFFIC CONTROL PLAN DOES NOT RELIEVE THE CONTRACTOR OF THEIR RESPONSIBILITY AS SPECIFIED IN SECTION 901.3(a) OF PUBLICATION 408.

ALL TRAFFIC CONTROL DEVICES SHALL BE NEW OR IN LIKE NEW CONDITION AND MAINTAINED AS SUCH.

REMOVE CONFLICTING PAVEMENT MARKINGS IN ACCORDANCE WITH PUBLICATION 408 SECTION 963.

INVENTORY AND DOCUMENT ALL EXISTING SIGNS AND PAVEMENT MARKING PATTERNS PRIOR TO THE BEGINNING OF CONSTRUCTION WITH THE PROJECT ENGINEER OR REPRESENTATIVE.

PLACE TEMPORARY NON-PLOWABLE RAISED PAVEMENT MARKERS AT 5' SPACING TO SUPPLEMENT PAINT LINES IN TRANSITIONS AND LANE SHIFTS.

MAINTAIN ONE LANE TRAFFIC WHILE INSTALLING CROSS PIPES AND PAVEMENT PATCHING UNDERCUTS. ONLY EXCAVATE WHAT CAN BE BACKFILLED BEFORE THE END OF THE WORKDAY. REFER TO PENNDOT PUBLICATION 408, SECTION 901(j) FOR MAINTENANCE OF CREATED DROP-OFF CONDITIONS.

CONTACT THE DISTRICT TRAFFIC ENGINEER PRIOR TO OPENING THE ROAD TO TRAFFIC TO REVIEW SIGNS AND PAVEMENT MARKING PATTERNS.

ALL POST MOUNTED SIGNS MUST BE MOUNTED ON BREAKAWAY STEEL POSTS AS SPECIFIED IN SECTION 1103.08 OF PUBLICATION 408.

INSTALL SIGNS ON FREEWAY AND EXPRESSWAY AS PER GA 07-A, 07-B, AND 07-C.

TWO (2) WEEKS PRIOR TO IMPLEMENTING TRAFFIC PATTERN CHANGES, CONTACT: EMERGENCY SERVICES (POLICE, FIRE, MEDICAL, ETC.), LOCAL BUSINESSES, LOCAL MUNICIPALITIES, LOCAL POSTMASTER, COUNTY MAINTENANCE, SCHOOL DISTRICT, POSTED AND BONDED ROADS COORDINATOR. COORDINATE A PRESS RELEASE WITH PENNDOT COMMUNITY RELATIONS COORDINATOR PRIOR TO THE START OF WORK AND/OR START OF A NEW CONSTRUCTION PHASE.

NOTIFY THE DISTRICT CONSTRUCTION UNIT/PERMITS ENGINEER, IN WRITING (FORM M-937R) (BRIDGE/ROUTE RESTRICTION), AT LEAST 14 DAYS (EXCLUDING WEEKENDS AND HOLIDAYS) BEFORE IMPLEMENTING, CHANGING, OR EXTENDING ANY RESTRICTION OR CLOSURE. NOTIFY THE DISTRICT CONSTRUCTION UNIT, IN WRITING (FORM M-937RO) (ROUTE/BRIDGE RESTRICTION OPENING), AT LEAST SEVEN (7) DAYS (EXCLUDING WEEKENDS AND HOLIDAYS) BEFORE REMOVING ANY RESTRICTION OR CLOSURE.

WHEN WORK IMPACTS A SIGNALIZED INTERSECTION, THE SIGNAL MUST BE PUT INTO FLASH BY THE LOCAL MUNICIPALITY AND THE INTERSECTION CONTROLLED BY FLAGGER USING A RED FLAG.

MAINTAIN ACCESS TO SIDE ROADS, PRIVATE DRIVEWAYS, AND BUSINESSES AT ALL TIMES.

CONTACT THE TRAFFIC MANAGEMENT CENTER (TMC) AT LEAST 15 MINUTES PRIOR TO BEGINNING WORK WITHIN ANY STATE OWNED ROADWAY INCLUDING INTERSTATE AND LIMITED ACCESS. REPORT THE WORK LOCATION, BEGINNING TIME OF TRAFFIC RESTRICTIONS, WHAT TRAFFIC RESTRICTIONS DRIVERS WILL ENCOUNTER, THE EXPECTED TIME THAT TRAFFIC PATTERNS WILL RETURN TO NORMAL, AND WHAT PATA NUMBER IS BEING UTILIZED. UPON CONCLUSION OF THE TRAFFIC RESTRICTION, NOTIFY THE TMC IMMEDIATELY (814) 768-0725.

IF IT BECOMES NECESSARY FOR A CONSTRUCTION PROJECT TO EXTEND INTO WINTER MONTHS, THE PROJECT APPLICANT AND CONTRACTOR ARE RESPONSIBLE TO ENSURE THAT THE TEMPORARY TRAFFIC CONTROL DEVICES PROVIDE A 13'-15' LANE WIDTH (THIS CAN INCLUDE AVAILABLE SHOULDER AREA) FOR MAINTENANCE ACTIVITIES, SUCH AS SNOW PLOWING OPERATIONS. THE CONTRACTOR SHALL REVIEW THE TRAFFIC CONTROL SET UP AND TEMPORARY TRAFFIC CONTROL DEVICES THROUGHOUT THE INCLEMENT WEATHER OR STORM EVENT AND BE RESPONSIBLE FOR MAINTAINING AND RESETTING ANY TRAFFIC CONTROL DEVICES WHENEVER NEEDED. ALL TRAFFIC CONTROL DEVICES SHALL BE KEPT CLEAN AND IN THE UPRIGHT POSITION. THE PENNDOT COUNTY MAINTENANCE OFFICE SHALL BE NOTIFIED, AND PENNDOT COUNTY MAINTENANCE PERSONNEL WILL EVALUATE SNOW REMOVAL REQUIREMENTS THROUGHOUT THE WORK ZONE. IF THE MAINTAINING OF DEVICES OR WINTER OPERATIONS BECOMES AN ISSUE A DIFFERENT TRAFFIC CONTROL SET UP AND SCHEME WILL BE REQUIRED, OR THE WORK ZONE WILL NEED TO BE OPENED TO TRAFFIC WITH NO RESTRICTIONS.

GENERAL NOTES (CONTINUED):

DETAILS OTHER THAN THOSE INDICATED ARE ON THE FOLLOWING STANDARD DRAWINGS.:

TC-8700C JUNE 13, 2013
TC-8716 JUNE 13, 2013
TC-8717 JUNE 13, 2013

SHORT TERM TRAFFIC CONTROL REQUIRED FOR SITE PREPARATION WORK SHALL BE IN ACCORDANCE WITH THE FOLLOWING PATA FIGURES FROM PENNDOT PUBLICATION 213:

A. PATA 101-A
B. PATA 102
C. PATA 103
D. PATA 106

CERTIFIED CORRECT PLANS
Professional Engineer
Approved by Bureau of Technical Utility Services
PA PUBLIC UTILITY COMMISSION
03/19/2024
ATTEST Secretary
Docket: A-2022-3036477

SHEET INDEX

DESCRIPTION	SHEET
GENERAL NOTES AND SIGN TABULATION	1
DETOUR PLAN	2

TABULATION OF QUANTITIES
TRAFFIC CONTROL PLAN

0901 0231 ADDITIONAL WARNING LIGHTS, TYPE B DAY	0901 0240 ADDITIONAL TRAFFIC CONTROL SIGNS SF			REMARKS	SIDE	STATIONS
28	100			ENTIRE PROJECT	LT/RT	-

TABULATION OF TRAFFIC CONTROL DEVICES INCLUDED IN ITEM 0901-0001
(FOR INFORMATION ONLY)

SERIES DESIGNATION	DESCRIPTION	SIZE ▲	QUANTITY
M4-8A	END DETOUR	24"X18"	2
M4-9L	DETOUR, LEFT	30"X24"	2
M4-9R	DETOUR, RIGHT	30"X24"	2
M4-9S	DETOUR, STRAIGHT	30"X24"	4
M4-9SL	LEFT ADVANCE DETOUR	30"X24"	2
M4-9SR	RIGHT ADVANCE DETOUR	30"X24"	2
M4-10L	DETOUR ARROW, LEFT	48"X18"	1
M4-10R	DETOUR ARROW, RIGHT	48"X18"	2
R11-2	ROAD CLOSED	48"X30"	4
R11-3A	ROAD CLOSED-LOCAL TRAFFIC ONLY	60"X30"	1
W20-2	ADVANCE DETOUR	36"X36"	3
W23-101	THIS STREET TO BE CLOSED FOR CONSTRUCTION	96"X48"	2
W30-1-2	DISTANCE (1000 FT) (PANEL)	20"X6"	1
W30-1-3	DISTANCE (1500 FT) (PANEL)	20"X6"	1
W30-1-6	DISTANCE (AHEAD) (PANEL)	20"X6"	1
	TYPE III BARRICADE		7
	TYPE B YELLOW FLASHING LIGHT		13

▲ THE SIZES SHOWN ARE MINIMUM REQUIREMENTS

SEQUENCE OF CONSTRUCTION:

THE CONSTRUCTION SEQUENCE SHOWN AND DESCRIBED IN THESE DRAWINGS IS A SUGGESTED SEQUENCE. ITS INCLUSION IN THESE DRAWINGS DOES NOT IMPLY THAT THIS SEQUENCE OR METHOD IS MANDATED. HOWEVER, ANY PROPOSED CONSTRUCTION SEQUENCE MUST COMPLY WITH THE MAXIMUM TRACK OUTAGE LENGTH DEFINED BY THE OWNER, WHICH IS FOUR (4) CALENDAR DAYS OR 96 TOTAL HOURS.

PRE-CONSTRUCTION

ALL AERIAL ELECTRIC AND TELECOMMUNICATION UTILITIES ARE TO BE RELOCATED BY THE UTILITY COMPANY PRIOR TO SITE PREPARATION WORK.

STAGE 1:*

UTILIZE SHORT TERM TRAFFIC CONTROL AS REQUIRED TO PREPARE THE SITE.

1. INSTALL E&S CONTROL MEASURES.
2. PERFORM ALL NECESSARY TREE REMOVAL / CLEARING AND GRUBBING (SUBJECT TO ALL ENVIRONMENTAL DATE RESTRICTIONS NOTED IN THE CONTRACT DOCUMENTS).
3. EXTEND EXISTING DRAINAGE PIPES.
4. INSTALL ATON SIGNAGE AND CONSTRUCT TEMPORARY CAUSEWAY.
5. PERFORM MASONRY CRACK REPAIRS ON THE PIER AND ABUTMENT.
6. INSTALL TEMPORARY AGGREGATE FILL TO ESTABLISH NEAR-LEVEL GRADE IN THE WORK AREA, PROTECTING UNDERGROUND UTILITIES AS REQUIRED.
7. INSTALL TEMPORARY SHORING ADJACENT TO RIVER ROAD TO THE NORTH OF THE BRIDGE FOR ASSEMBLY OF THE NEW STRUCTURE AND TO THE SOUTH OF THE BRIDGE FOR DISASSEMBLY OF THE EXISTING STRUCTURE.
8. CONSTRUCT NEW THROUGH-GIRDER SPAN ON THE TEMPORARY SHORING AND STAGE ALL NECESSARY CONSTRUCTION MATERIALS.
9. MOBILIZE AND STAGE THE SELF-PROPELLED MODULAR TRANSPORTERS (SPMT).

STAGE 2A:

DETOUR SR 1001 (RIVER ROAD) TO PERFORM THIS WORK.

1. TAKE THE RAILROAD OUT OF SERVICE AND REMOVE THE TRACKS ACROSS SPAN 1 AND THE WESTERN BRIDGE APPROACH.
2. USE SPMT TO LIFT AND REMOVE THE EXISTING TRUSS SPAN. MOVE THE EXISTING SPAN TO THE TEMPORARY SHORING (DO NOT DEMOLISH THE STRUCTURE ON RIVER ROAD) AND BEGIN DISASSEMBLY. DEMOLITION OF THE STRUCTURE MAY CONTINUE BEYOND THIS STAGE OF CONSTRUCTION.
3. EXCAVATE BEHIND THE ABUTMENT WALL AND REMOVE PORTIONS OF THE ABUTMENT.

STAGE 2B:

DETOUR SR 1001 (RIVER ROAD) TO PERFORM THIS WORK.

4. PERFORM ALL REMAINING SUBSTRUCTURE WORK AT THE EXISTING ABUTMENT AND PIER AS INDICATED ON THE STRUCTURE PLANS.
5. INSTALL BACKFILL / GEOSYNTHETIC REINFORCED SOIL / APPROACH SLAB, AND CONSTRUCT BALLASTED TRACK BEHIND THE EXISTING ABUTMENT.
6. USE SPMT TO MOVE THE NEW BRIDGE SPAN FROM THE STAGING AREA TO FINAL ALIGNMENT.
7. INSTALL RAIL THROUGH THE WORK AREA; RESTORE TRAIN SERVICE.

STAGE 3:*

UTILIZE SHORT TERM TRAFFIC CONTROL AS REQUIRED TO RESTORE THE SITE TO PRE-CONSTRUCTION CONDITIONS.

1. RESTORE THE SITE TO PRE-CONSTRUCTION CONDITIONS.
2. REMOVE PIPE EXTENSIONS AND INSTALL PERMANENT ROCK APRONS AT THE END OF THE EXISTING STORM DRAIN PIPES.
3. RESEED THE TOPSOIL AND ESTABLISH VEGETATIVE COVER.
4. MILL AND OVERLAY PAVEMENT.
5. INSTALL PERMANENT PAVEMENT MARKINGS.
6. REMOVE EXISTING AND INSTALL NEW SIGNS.

* TO PROVIDE FLEXIBILITY IN SITE PREPARATION / RESTORATION AND TO FACILITATE THE BRIDGE CONSTRUCTION CRITICALLY IMPACTING THE TRACK OUTAGE, SR 1001 (RIVER ROAD) MAY BE DETOURED AS SHOWN IN THESE PLANS IN ADVANCE OF AND/OR FOLLOWING THE TRACK OUTAGE (STAGE 2). THE SPECIFIC TIME FRAME TO BE UTILIZED IS AT THE DISCRETION OF THE CONTRACTOR, BUT THE MAXIMUM CUMULATIVE TIME RIVER ROAD IS DETOURED SHALL NOT EXCEED FIFTEEN (15) CALENDAR DAYS, AFTER WHICH THE CONTRACTOR IS SUBJECT TO ROAD USERS LIQUIDATED DAMAGES.

PREPARED BY:
HNTB CORPORATION
4507 N. FRONT ST.
SUITE 300
HARRISBURG
PA 17110

COMMONWEALTH OF PENNSYLVANIA
REGISTERED PROFESSIONAL
BRANDON JEFFREY HESS
ENGINEER
No. PE088810
04/28/2023

TRAFFIC CONTROL PLAN
GENERAL NOTES

RECOMMENDED _____ 20___

DISTRICT TRAFFIC ENGINEER

4/28/2023
FILENAME: 77861-W013-s-tr-pln201.dgn

DISTRICT	COUNTY	ROUTE	SECTION	SHEET
2-0	CLEARFIELD	1001	MTF	2 OF 2
LAWRENCE TOWNSHIP				

REVISION NUMBER	REVISIONS	DATE	BY	APPROVED

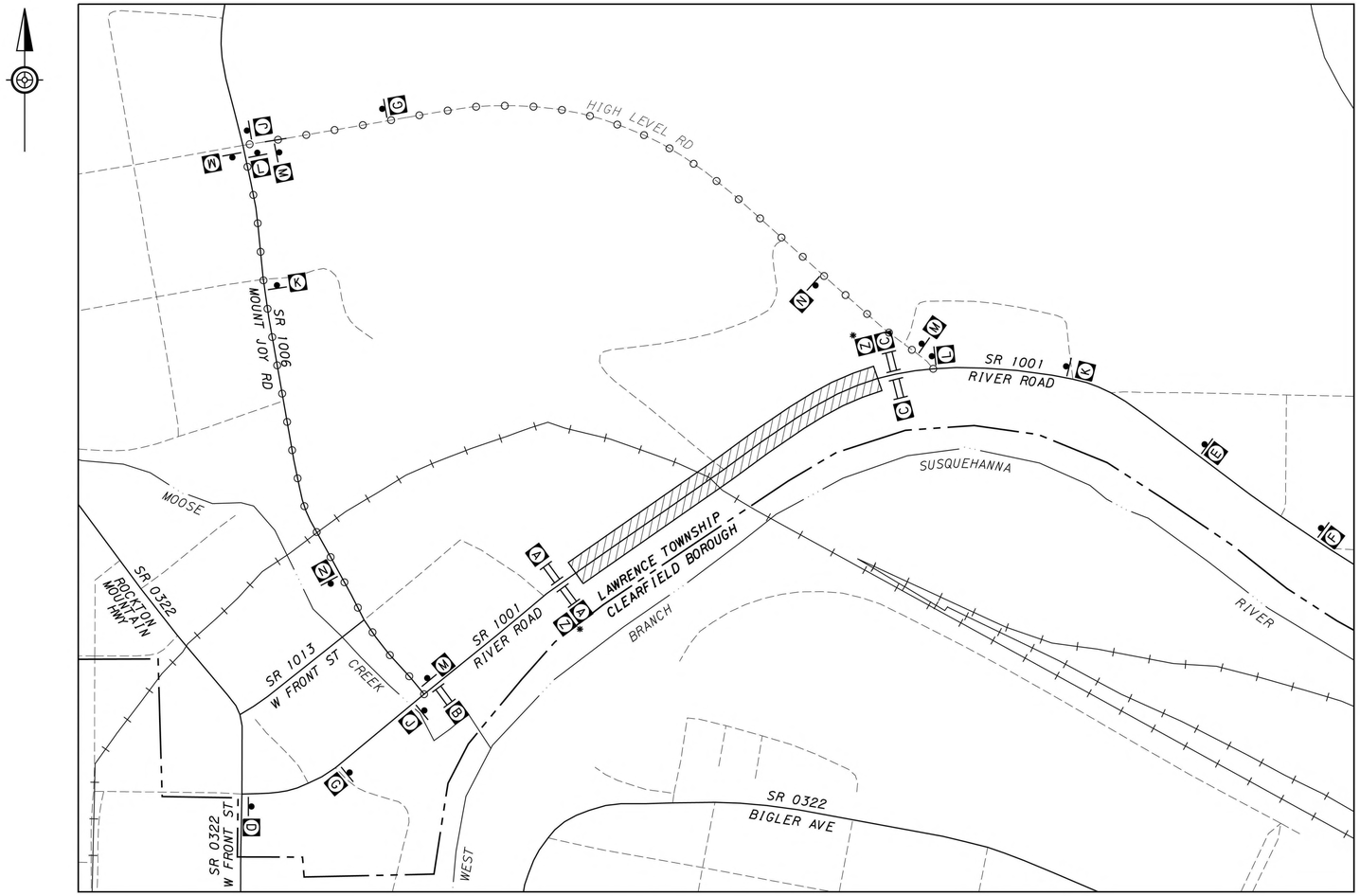

LEGEND

- DETOUR ROUTE
- STATE ROUTE
- OTHER ROAD
- MUNICIPAL BOUNDARY
- STREAM
- RAILROAD
- WORK AREA
- SIGN
- TYPE III BARRICADE WITH SIGN
- TYPE B FLASHING LIGHT (YELLOW)

SCALE

0 250 500 FEET

DETOUR MAP

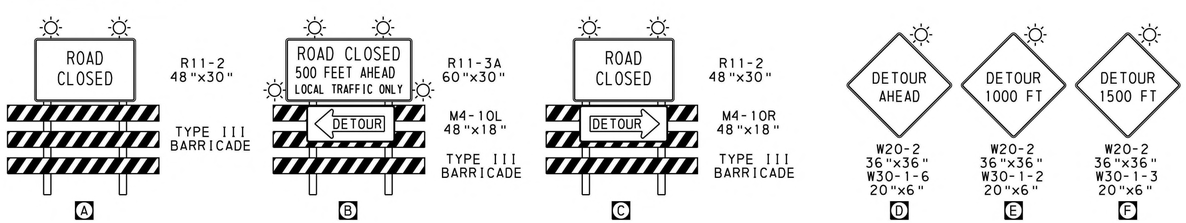

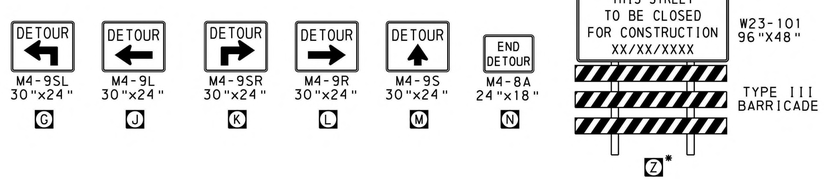

* INSTALL W23-101 SIGNS TWO WEEKS PRIOR TO IMPLEMENTATION OF THE DETOUR WITH AN APPROPRIATE DATE LISTED ON THE SIGN. PLACE ONE (1) SIGN ADJACENT TO THE SHOULDER OF SR 1001 ON BOTH SIDES OF THE RAILROAD BRIDGE. REMOVE SIGNS ONCE DETOUR IS IMPLEMENTED.

NOTES

1. OVERALL DETOUR LENGTH = 0.9 MILES
2. ALL SIGNS GREATER THAN NINE SQUARE FEET MUST BE MOUNTED ON TYPE III BARRICADES OR GROUND MOUNTED TYPE B POSTS. REFER TO TC-8717, NOTE 2.
3. STRIPES ON BARRICADE RAILS MUST BE SLOPING DOWNWARD AT AN ANGLE OF 45 DEGREES IN THE DIRECTION ROAD USERS ARE TO PASS.
4. SIGN SPACING TO BE AS INDICATED IN PENNDOT PUBLICATION 213, PATA 215. SIGN PLACEMENT MAY BE ADJUSTED TO ACCOMMODATE FIELD CONDITIONS.

COMMONWEALTH OF PENNSYLVANIA
REGISTERED PROFESSIONAL ENGINEER
BRANDON JEFFREY HESS
No. PE088812

TRAFFIC CONTROL PLAN
SR 1001 DETOUR

8/4/2023
FILENAME: 77861-W013-s-tr-pln202.dgn

DISTRICT	COUNTY	ROUTE	SECTION	SHEET
2-0	CLEARFIELD	1001	MTF	1 OF 2
LAWRENCE TOWNSHIP				

REVISION NUMBER	REVISIONS	DATE	BY

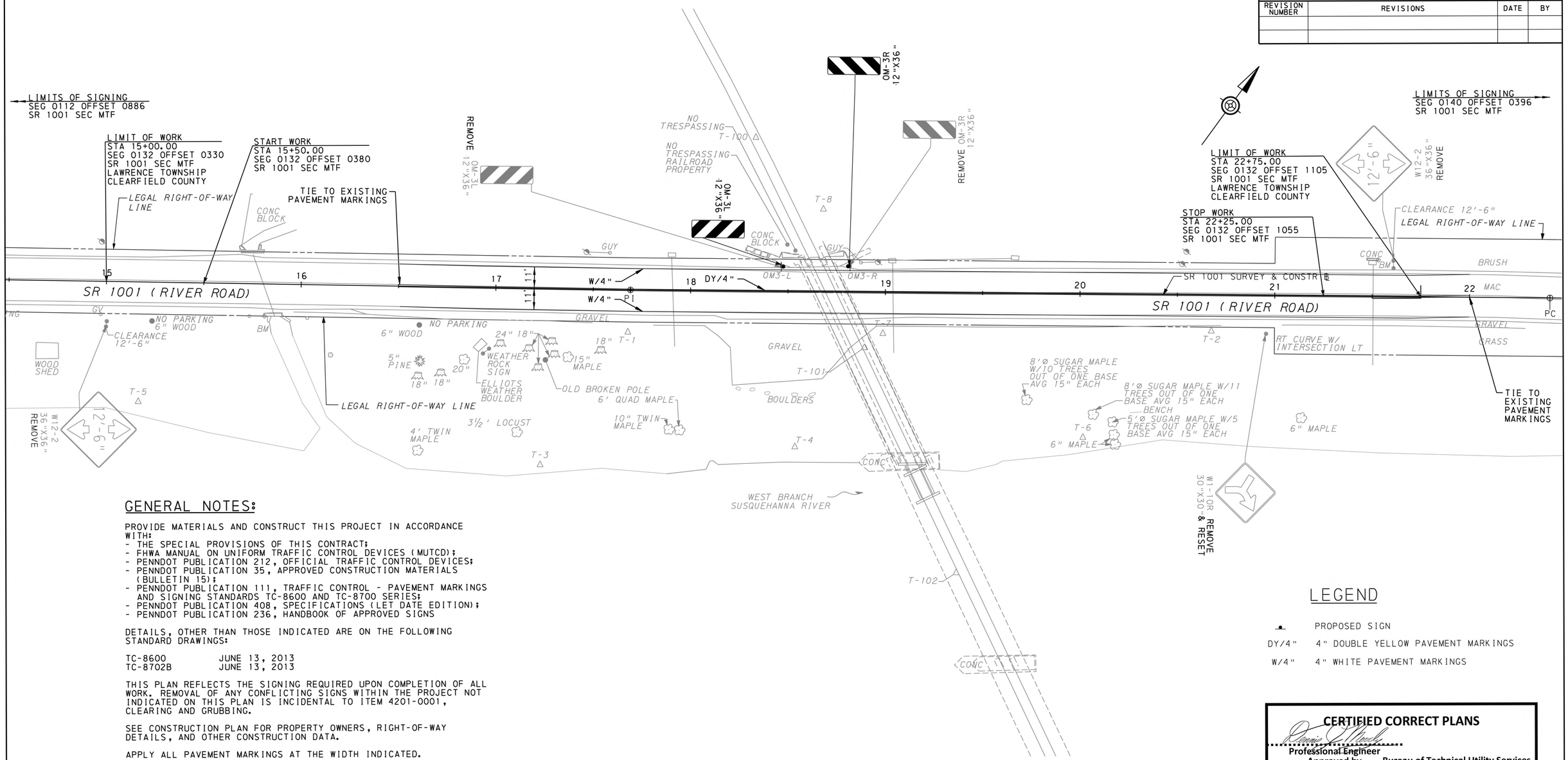

GENERAL NOTES:

PROVIDE MATERIALS AND CONSTRUCT THIS PROJECT IN ACCORDANCE WITH:
- THE SPECIAL PROVISIONS OF THIS CONTRACT;
- FHWA MANUAL ON UNIFORM TRAFFIC CONTROL DEVICES (MUTCD);
- PENNDOT PUBLICATION 212, OFFICIAL TRAFFIC CONTROL DEVICES;
- PENNDOT PUBLICATION 35, APPROVED CONSTRUCTION MATERIALS (BULLETIN 15);
- PENNDOT PUBLICATION 111, TRAFFIC CONTROL - PAVEMENT MARKINGS AND SIGNING STANDARDS TC-8600 AND TC-8700 SERIES;
- PENNDOT PUBLICATION 408, SPECIFICATIONS (LET DATE EDITION);
- PENNDOT PUBLICATION 236, HANDBOOK OF APPROVED SIGNS

DETAILS, OTHER THAN THOSE INDICATED ARE ON THE FOLLOWING STANDARD DRAWINGS:

TC-8600 JUNE 13, 2013
TC-8702B JUNE 13, 2013

THIS PLAN REFLECTS THE SIGNING REQUIRED UPON COMPLETION OF ALL WORK. REMOVAL OF ANY CONFLICTING SIGNS WITHIN THE PROJECT NOT INDICATED ON THIS PLAN IS INCIDENTAL TO ITEM 4201-0001, CLEARING AND GRUBBING.

SEE CONSTRUCTION PLAN FOR PROPERTY OWNERS, RIGHT-OF-WAY DETAILS, AND OTHER CONSTRUCTION DATA.

APPLY ALL PAVEMENT MARKINGS AT THE WIDTH INDICATED.

ALL WATERBORNE PAINT WILL BE APPLIED WITH A DOUBLE LAYER.

USE WATERBORNE PAINT FOR ALL LONGITUDINAL LINES.

REMOVE CONFLICTING EXISTING PAVEMENT MARKINGS, WHEN REQUIRED.

MATCH ALL PROPOSED PAVEMENT MARKINGS AT LIMITS OF PAVING TO EXISTING PAVEMENT MARKINGS WHERE APPLICABLE.

EXISTING SIGNS NOT SHOWN ARE TO REMAIN, UNLESS OTHERWISE NOTED.

PROVIDE LATERAL SIGN CLEARANCE FROM EDGE OF ROADWAY TO POST MOUNTED SIGNS IN ACCORDANCE WITH TC-8702B.

EXACT LOCATION OF SIGNS MY BE FIELD ADJUSTED TO MAINTAIN SIGHT DISTANCE AND AVOID UTILITIES.

SCALE

0 25 50 FEET

IN ADDITION TO THE PROPOSED SIGNS SHOWN ON THIS SHEET, REMOVE EXISTING SIGNS AS FOLLOWS:

SERIES	DESCRIPTION	ACTION	STA	SIDE
W12-2	LOW CLEARANCE	REMOVE, TYPE B	7+60	RT
W16-103P	DISTANCE PLAQUE			
W12-2	LOW CLEARANCE	REMOVE, TYPE B	25+30	LT
W16-103P	DISTANCE PLAQUE			
SPECIAL	CLEARANCE DETOUR	REMOVE, TYPE C	25+70	LT
SPECIAL	CLEARANCE DETOUR	REMOVE, TYPE C	32+30	LT

LEGEND

●	PROPOSED SIGN
DY/4"	4" DOUBLE YELLOW PAVEMENT MARKINGS
W/4"	4" WHITE PAVEMENT MARKINGS

CERTIFIED CORRECT PLANS

Professional Engineer

Approved by Bureau of Technical Utility Services

PA PUBLIC UTILITY COMMISSION

03/19/2024

ATTEST Secretary

Docket: A-2022-3036477

PREPARED BY:
HNTB CORPORATION
4507 NORTH FRONT STREET
SUITE 300
HARRISBURG, PA 17110

COMMONWEALTH OF PENNSYLVANIA
REGISTERED PROFESSIONAL
ANDREA HEATHER REEDE
ENGINEER
056076-E

SIGNING AND PAVEMENT MARKING PLAN

8/4/2023
FILENAME: 63948-W036-s-spm-pln01.dgn

TABULATION OF QUANTITIES

SIGNING AND PAVEMENT MARKING PLAN

REVISION NO	REVISIONS	DATE	BY	DISTRICT	COUNTY	ROUTE	SECTION	SHEET
				02	CLEARFIELD	1001	MTF	2 OF 2
				LAWRENCE TOWNSHIP				

COMMONWEALTH OF PENNSYLVANIA
REGISTERED PROFESSIONAL
ANDREA HEATHER REEDE
ENGINEER
056076-E

POST MOUNTED SIGNS, TYPE B		RESET POST MOUNTED SIGNS, TYPE B		4" WHITE WATERBORNE PAVEMENT MARKINGS		4" YELLOW WATERBORNE PAVEMENT MARKINGS		REMOVE POST MOUNTED SIGNS, TYPE B		REMOVE POST MOUNTED SIGNS, TYPE C		REMARKS	SIDE	STATIONS
0931 0001	SF	0941 0001	EACH	0962 1000	LF	0962 1005	LF	0971 0001	EACH	0972 0001	EACH	ITEM NUMBER / UNIT		
												SR1001		
								1				W12-2, DISTANCE AHEAD PLAQUE	RT	7+60.00
								1				W12-2	RT	15+00.00
				1100								EDGE LINE	LT	16+50.00 to 22+00.00
						2200						DOUBLE YELLOW	LT / RT	16+50.00 to 22+00.00
				1100								EDGE LINE	RT	16+50.00 to 22+00.00
3								1				OM-3L	LT	18+48.00
3								1				OM-3R	LT	18+81.00
	1											W1-10R	RT	20+95.00
								1				W12-2	LT	21+61.00
								1				W12-2, DISTANCE AHEAD PLAQUE	LT	25+30.00
										1		LOW CLEARANCE DETOUR SIGN	LT	25+70.00
										1		LOW CLEARANCE DETOUR SIGN	LT	32+30.00
6	1	2200		2200		6		2				TOTALS		

PROJECT ID: 5132 MPMS: 115877 ECMS: 115877 8/1/2023 2:34:17 PM

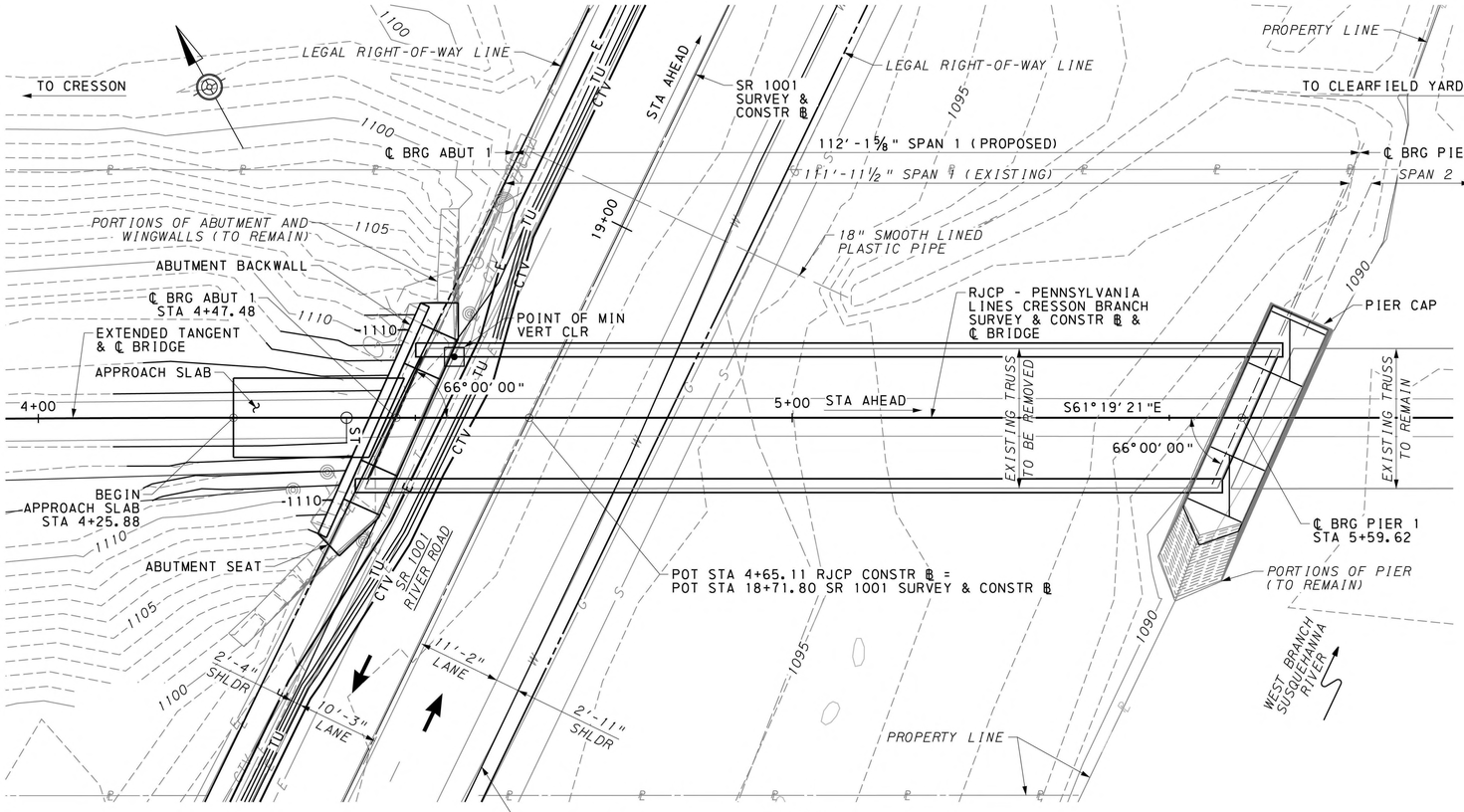

PLAN

5 0 5 10 FEET

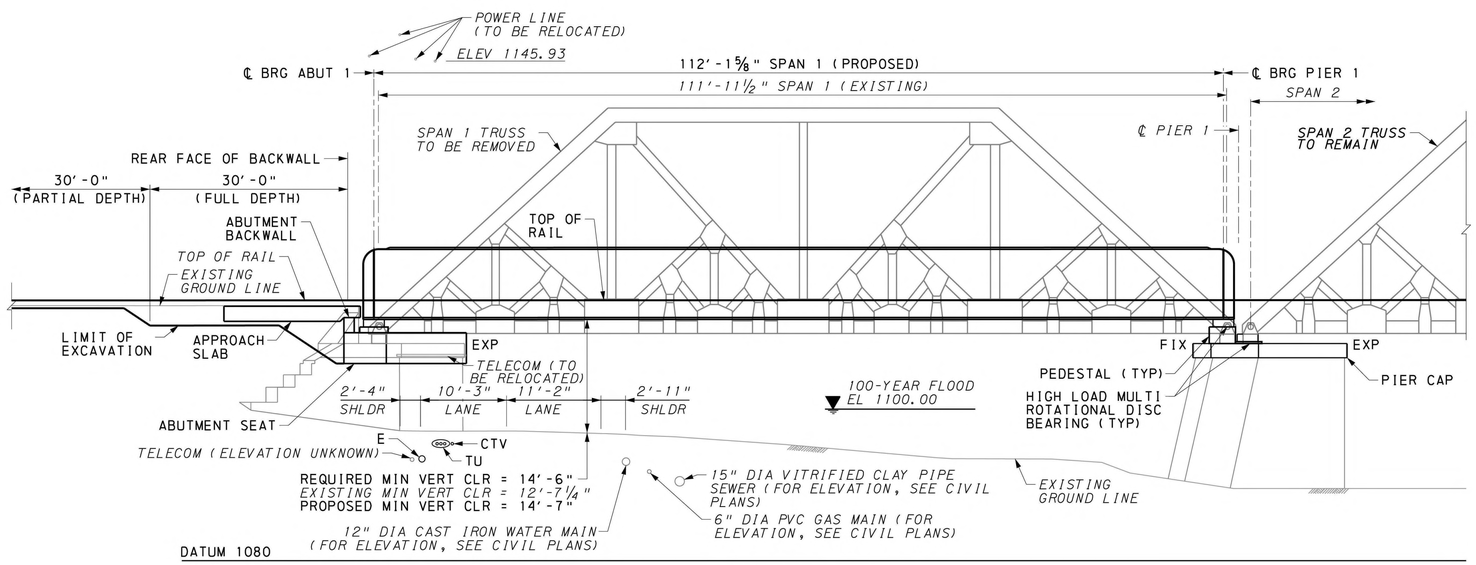

ELEVATION

5 0 5 10 FEET

LEGEND

→	DIRECTION OF TRAFFIC
200	PROPOSED TEMPORARY CONTOUR
200	*EXISTING CONTOUR*
	LEGAL RIGHT-OF-WAY
CTV	*EXISTING CABLE TELEVISION*
E	*EXISTING ELECTRIC*
W	*EXISTING WATER*
S	*EXISTING SANITARY SEWER*
TU	*EXISTING TELEPHONE UNDERGROUND*
G	*EXISTING GAS*
CTV	PROPOSED CABLE TELEVISION
E	PROPOSED ELECTRIC UNDERGROUND
TU	PROPOSED TELEPHONE UNDERGROUND

NOTES:

1. FOR SUPPLEMENTAL DRAWINGS, SEE SHEET 2.

CERTIFIED CORRECT PLANS

Professional Engineer
Approved by Bureau of Technical Utility Services

PA PUBLIC UTILITY COMMISSION

ATTEST Secretary

03/19/2024

Docket: A-2022-3036477

INDEX OF DRAWINGS

SHEET NUMBER	TITLE
1	GENERAL PLAN & ELEVATION
2	GENERAL NOTES 1
3	GENERAL NOTES 2
4	TYPICAL SECTION & DETAILS
5	SUMMARY OF QUANTITIES
6	STAKE-OUT PLAN
7	GRS & SUBSTRUCTURE DETAILS
8	ABUTMENT 1 REPAIR & DEMO DETAILS
9	ABUTMENT 1 PLAN & ELEVATION
10	ABUTMENT 1 SECTION & DETAILS
11	ABUTMENT 1 APPROACH SLAB
12	PIER 1 REPAIR & DEMO DETAILS
13	PIER 1 PLAN & ELEVATION
14	PIER 1 SECTION & DETAILS
15	FRAMING PLAN & GIRDER ELEVATION
16	GIRDER & FRAMING DETAILS 1 OF 16
17	GIRDER & FRAMING DETAILS 2 OF 16
18	GIRDER & FRAMING DETAILS 3 OF 16
19	GIRDER & FRAMING DETAILS 4 OF 16
20	GIRDER & FRAMING DETAILS 5 OF 16
21	GIRDER & FRAMING DETAILS 6 OF 16
22	GIRDER & FRAMING DETAILS 7 OF 16
23	GIRDER & FRAMING DETAILS 8 OF 16
24	GIRDER & FRAMING DETAILS 9 OF 16
25	GIRDER & FRAMING DETAILS 10 OF 16
26	GIRDER & FRAMING DETAILS 11 OF 16
27	GIRDER & FRAMING DETAILS 12 OF 16
28	GIRDER & FRAMING DETAILS 13 OF 16
29	GIRDER & FRAMING DETAILS 14 OF 16
30	GIRDER & FRAMING DETAILS 15 OF 16
31	GIRDER & FRAMING DETAILS 16 OF 16
32	BEARING DESIGN DATA AND NOTES
33	EXPANSION BEARING DETAILS 1 OF 3
34	EXPANSION BEARING DETAILS 2 OF 3
35	EXPANSION BEARING DETAILS 3 OF 3
36	FIXED BEARING DETAILS
37	END BRACKET BEARING DETAILS
38	DECK PLAN & DETAILS 1 OF 5
39	DECK PLAN & DETAILS 2 OF 5
40	DECK PLAN & DETAILS 3 OF 5
41	DECK PLAN & DETAILS 4 OF 5
42	DECK PLAN & DETAILS 5 OF 5
43	DECK WATERPROOFING & DRAINAGE
44	EXISTING SPAN 1 DEMO DETAILS
45	EXISTING SPAN 2 RETROFIT DETAILS
46	CONCEPTUAL TRUSS JACKING DETAILS
47	CAMBER DIAGRAM & MISC DETAILS
48	STAGING PLAN & ELEVATION 1 OF 3
49	STAGING PLAN & ELEVATION 2 OF 3
50	STAGING PLAN & ELEVATION 3 OF 3
51-54	STRUCTURE BORINGS

Mark	Description	By	Chk'd	Recm'd	Date

REVISIONS

MPMS/ECMS PROJ: 115877

HNTB

COMMONWEALTH OF PENNSYLVANIA
REGISTERED PROFESSIONAL ULYSSES C. KOUTSOGIANNIS ENGINEER PE073912

REG PROF ENGINEER
DATE 10/12/2023

PREPARED BY:
HNTB CORPORATION
4507 NORTH FRONT STREET
SUITE 300
HARRISBURG, PA 17110

COMMONWEALTH OF PENNSYLVANIA
DEPARTMENT OF TRANSPORTATION

CLEARFIELD COUNTY
SR 1001 SECTION MTF

SEG 0132 OFFSET 0701
CR 65.60 (CRESSON BRANCH) STA 4+65.11
OVER SR 1001 (RIVER ROAD)
STEEL THROUGH PLATE GIRDER & STEEL THROUGH TRUSS BRIDGE

GENERAL PLAN & ELEVATION

RECOMMENDED

SHEET 1 OF 54
+ SUPPLEMENTAL DRAWINGS

S-1001RJC

DES: JAC	DES CKD: MJR	DWG: JTM	DWG CKD: JAC

2/12/2024
FILENAME: 77861-W013-s-br-gpa01.dgn

GENERAL NOTES

CONSTRUCTION SPECIFICATIONS:

1. PROVIDE MATERIALS AND PERFORM WORK IN ACCORDANCE WITH SPECIFICATIONS, PENNDOT PUBLICATION 408/2020, AASHTO/AWS D1.5M/D1.5: 2015 BRIDGE WELDING CODE, AND CONTRACT SPECIAL PROVISIONS. USE AASHTO/AWS D1.1/D1.1M: 2015 FOR WELDING NOT COVERED IN AASHTO/AWS D1.5M/D1.5: 2015.

DESIGN SPECIFICATIONS:

1. AMERICAN RAILWAY ENGINEERING AND MAINTENANCE-OF-WAY ASSOCIATION (AREMA) MANUAL FOR RAILWAY ENGINEERING, 2021.
2. AASHTO LRFD BRIDGE DESIGN SPECIFICATIONS, 8TH EDITION, 2017, AND AS SUPPLEMENTED BY DESIGN MANUAL, PART 4, DECEMBER 2019 (INCLUDING REVISIONS THROUGH DECEMBER 2020).
3. AMERICAN INSTITUTE OF STEEL CONSTRUCTION (AISC) STEEL CONSTRUCTION MANUAL, 14TH EDITION, 2011 AND AISC 360-10.
4. LIVE LOAD DISTRIBUTION TO GIRDERS IS BASED UPON THREE-DIMENSIONAL FINITE ELEMENT ANALYSIS METHOD.
5. STEEL DESIGN IS IN ACCORDANCE WITH ALLOWABLE STRESS DESIGN (ASD) METHOD, AREMA CHAPTER 15, SECTION 1.4.
6. REINFORCED CONCRETE DESIGN IS IN ACCORDANCE WITH LOAD FACTOR DESIGN (LFD) METHOD, AREMA CHAPTER 8, SECTION 2.2.4c.

DESIGN LIVE LOADS:

1. VERTICAL AND LONGITUDINAL LOAD (SUPERSTRUCTURE AND PRECAST SUBSTRUCTURE): COOPER E80 OR ALTERNATE LIVE LOAD ON 4 AXLES WITH LIVE LOAD IMPACT FOR ROLLING EQUIPMENT WITHOUT HAMMER BLOW, WHICHEVER PRODUCES THE GREATEST MEMBER STRESS. FOR SERVICEABILITY DEFLECTION REQUIREMENTS, ONLY COOPER E80 LIVE LOAD USED.
2. THE PRECAST APPROACH SLAB IS DESIGNED FOR COOPER E80 WITH 100% LIVE LOAD IMPACT.
3. THIS IS A SUPERSTRUCTURE REPLACEMENT PROJECT. THE EXISTING SUBSTRUCTURE TO REMAIN WAS NOT ANALYZED AS PART OF THIS DESIGN. THE STRUCTURE SHALL CARRY THE SAME APPLIED LIVE LOADING AFTER SPAN 1 REPLACEMENT AS BEFORE.
4. DESIGN TRAIN SPEED IS 15 MPH. EXISTING RAIL GEOMETRY SUPPORTS 15 MPH.
5. FATIGUE DESIGN IS BASED UPON AREMA CHAPTER 15, SECTION 1.3.13.

DEAD LOADS:

1. STEEL DEAD LOAD: 490 PCF.
2. NORMAL WEIGHT REINFORCED CONCRETE: 150 PCF.
3. TRACK RAILS, INSIDE GUARDRAILS, AND FASTENINGS: 200 PLF PER TRACK.
4. DIRECT FIXATION FASTENER ALLOWANCE: 49 LBS PER FASTENER.
5. NO UTILITY LOAD ALLOWANCE.

GENERAL:

1. VERIFY ALL DIMENSIONS AND GEOMETRY OF THE EXISTING STRUCTURE IN THE FIELD AS NECESSARY FOR PROPER FIT OF THE PROPOSED CONSTRUCTION. FIELD VERIFY ALL DIMENSIONS ON THE PLAN SHEETS.
2. ALL DIMENSIONS SHOWN ARE HORIZONTAL, EXCEPT AS NOTED.
3. SUPERSTRUCTURE DIMENSIONS SHOWN ARE FOR A NORMAL TEMPERATURE OF 68 DEGREES F.
4. STATIONS AND ELEVATIONS ARE IN FEET. ALL OTHER DIMENSIONS ARE IN FEET AND INCHES.
5. RAIL SHALL BE 132RE.
6. DIRECT FIXATION FASTENERS SHALL BE PROGRESS RAIL LMTT8. SEE PROJECT SPECIFICATIONS FOR DIRECTION FIXATION FASTENER SPECIFICATIONS.
7. FOR RAIL ANCHORING SCHEME, REFER TO TRACK PLANS.
8. IF RAIL SIZE, DIRECT FIXATION FASTENER TYPE, OR RAIL CLIP BEHAVIOR IS ALTERED BY THE CONTRACTOR, THE ENGINEER OF RECORD SHALL BE CONTACTED FOR APPROVAL.
9. DO NOT STAGE EQUIPMENT OR STOCKPILE MATERIALS ON THE BRIDGE UNLESS WRITTEN REQUEST HAS BEEN SUBMITTED AND ACCEPTED BY THE REPRESENTATIVE.
10. DO NOT USE ADHESIVE ANCHORS IN A TENSION APPLICATION FOR PERMANENT INSTALLATIONS. THIS REQUIREMENT PERTAINS TO CONSTRUCTION OF THE BRIDGE SPAN.
11. DO NOT USE ADHESIVE ANCHORS IN A SUSTAINED TENSION APPLICATION FOR TEMPORARY INSTALLATIONS, INCLUDING DURING CONSTRUCTION. THIS REQUIREMENT PERTAINS TO CONSTRUCTION OF THE BRIDGE SPAN.
12. NOTIFY THE REGIONAL HEADQUARTERS OF THE FISH COMMISSION PRIOR TO CONSTRUCTION AND COOPERATE WITH FISH COMMISSION DURING CONSTRUCTION.

    WILLIAM C. BROCK
    595 EAST ROLLING RIDGE DRIVE
    BELLEFONTE, PA 16823
    (814) 359-5254

REINFORCED CONCRETE NOTES:

1. PROVIDE 2" CONCRETE COVER ON REINFORCEMENT BARS, EXCEPT AS NOTED.
2. PRECAST SUBSTRUCTURE CONCRETE (PIER CAP, ABUTMENT SEAT, ABUTMENT BACKWALL, PEDESTALS, APPROACH SLAB) SHALL HAVE A MINIMUM COMPRESSIVE STRENGTH (F'C) AT 28 DAYS OF 5,000 PSI. PROVIDE A MINIMUM COMPRESSIVE STRENGTH (F'C) AT TIME OF STRIPPING OF 4,000 PSI.
3. USE CLASS AAA CEMENT CONCRETE ACCELERATED, 5 KSI IN ABUTMENT AND PIER GROUT POCKETS.
4. A HIGHER CLASS CONCRETE MAY BE SUBSTITUTED FOR A LOWER CLASS CONCRETE AT NO ADDITIONAL COST TO THE DEPARTMENT, IF APPROVED BY THE DISTRICT BRIDGE ENGINEER.
5. PROVIDE GRADE 60 REINFORCING STEEL BARS THAT MEET THE REQUIREMENTS OF ASTM A 615/A 615M, A 996/A 996M OR A 706/A 706M. DO NOT WELD GRADE 60 REINFORCING STEEL BARS UNLESS SPECIFIED. GRADE 40 REINFORCING STEEL BARS MAY BE SUBSTITUTED WITH A PROPORTIONAL INCREASE IN CROSS-SECTIONAL AREA, IF APPROVED BY THE CHIEF BRIDGE ENGINEER. DO NOT USE RAIL STEEL A 996/A 996M REINFORCEMENT BARS IN BRIDGE PIERS, ABUTMENTS OR WHERE BENDING OR WELDING OF THE REINFORCEMENT BARS IS INDICATED.
6. REINFORCEMENT BARS SHALL BE EPOXY-COATED UNLESS NOTED OTHERWISE. EPOXY COATED REINFORCEMENT SHALL BE STORED, HANDLED, AND PLACED IN ACCORDANCE WITH PUBLICATION 408, SECTION 1002.3G(1).
7. DETAIL AND FABRICATE REINFORCEMENT IN ACCORDANCE WITH AREMA MANUAL FOR RAILWAY ENGINEERING, CHAPTER 8.
8. WELDING OF REINFORCEMENT BARS DURING FABRICATION OR CONSTRUCTION IS NOT PERMITTED UNLESS SPECIFIED. IF SPECIFIED, WELDING SHALL CONFORM TO THE WELDING REQUIREMENTS OF AWS D1.4
9. GALVANIZED REINFORCING STEEL BARS MAY BE SUBSTITUTED FOR EPOXY-COATED REINFORCING STEEL BARS AT NO ADDITIONAL COST TO THE DEPARTMENT.
10. SET ANCHOR BOLTS IN PREFORMED HOLES. DO NOT DRILL UNLESS SPECIFICALLY INDICATED ON PLANS. FILL THE PREFORMED HOLES WITH NON-SHRINK GROUT. FILL THE CLEARANCE BETWEEN ANCHOR BOLTS AND HOLES IN MASONRY PLATES WITH APPROVED NON-HARDENING CAULKING COMPOUND CONFORMING TO PUBLICATION 408, SECTION 705.8.
11. PROVIDE DOWELS CONFORMING TO ASTM A615, GRADE 60. ALL DOWELS SHALL BE HOT-DIPPED GALVANIZED IN ACCORDANCE WITH ASTM A767. GROUT DOWELS IN PLACE WITH EPOXY GROUT IN ACCORDANCE WITH SPECIFICATIONS.
12. RAKE-FINISH ALL HORIZONTAL CONSTRUCTION JOINTS, TO ¼" AMPLITUDE EXCEPT AS INDICATED.
13. CHAMFER EXPOSED CONCRETE EDGES ¾" BY ¾", EXCEPT AS NOTED.

SEE GENERAL NOTES (CONTINUED) NEXT SHEET

HORIZONTAL ALIGNMENT DATA

SR 1001 RIVER ROAD

TANGENT
N54° 31' 17" E

VERTICAL ALIGNMENT DATA

SR 1001 RIVER ROAD

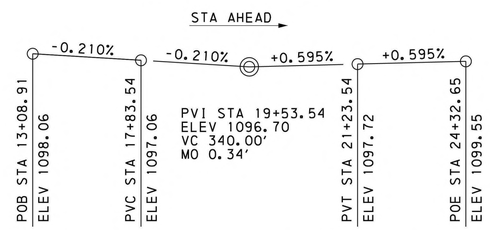

RJCP-PENNSYLVANIA LINES CRESSON BRANCH

SPIRAL
SPI STA 3+78.89
Δ = 2°00'52" RT
L = 93.00'
CS STA 3+47.48
ST STA 4+40.88

TANGENT
ST STA 4+40.88
POE STA 6+86.30
S 61°19'21" E
L = 245.42'

RJCP-PENNSYLVANIA LINES CRESSON BRANCH

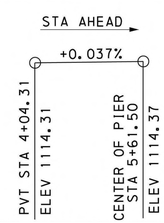

REINFORCEMENT BAR FABRICATION DETAILS	BC-736M	JAN 31, 2019
BRIDGE DRAINAGE	BC-751M	JAN 31, 2019
STEEL GIRDER DETAILS	BC-753M	JAN 31, 2019
BEARINGS	BC-755M	JAN 31, 2019
HIGH LOAD MULTI ROTATIONAL POT BEARINGS	BC-756M	SEPT 30, 2016
TYPICAL WATERPROOFING AND EXPANSION DETAILS	BC-788M	JAN 31, 2019
CLASSIFICATION OF EARTHWORK FOR STRUCTURES	RC-11M	JUN 01, 2010
BACKFILL AT STRUCTURES	RC-12M	FEB 08, 2019
GEOSYNTHETIC REINFORCED SOIL SLOPE	RC-14M	SEPT 15, 2016
GEOSYNTHETIC STABILIZED BRIDGE APPROACH	RC-15M	NOV 1, 2022
DESCRIPTION	DWG NO.	DATE

SUPPLEMENTAL DRAWINGS

LEGEND ABBREVIATIONS

ABUT	=	ABUTMENT
APPR	=	APPROACH
APPROX	=	APPROXIMATE
AHD	=	AHEAD
ARCH TREAT	=	ARCHITECTURAL TREATMENT
AST	=	ARCHITECTURAL SURFACE TREATMENT
℄	=	BASELINE
BOT	=	BOTTOM
BRG	=	BEARING
C TO C	=	CENTER TO CENTER
℄	=	CENTERLINE
CONC	=	CONCRETE
CONN	=	CONNECTION
CONSTR	=	CONSTRUCTION
CLR	=	CLEAR
DF	=	DIRECT FIXATION
DIA	=	DIAMETER
EA	=	EACH
EF	=	EACH FACE
EL/ELEV	=	ELEVATION
EQ	=	EQUAL
EXIST	=	EXISTING
FCM	=	FRACTURE CRITICAL MEMBER
FF	=	FRONT FACE
GALV	=	GALVANIZED
HORIZ	=	HORIZONTAL
INTER	=	INTERMEDIATE
INV	=	INVERT
JT	=	JOINT
MAX	=	MAXIMUM
MIN	=	MINIMUM
MISC	=	MISCELLANEOUS
NB	=	NORTHBOUND
NO	=	NUMBER
NTS	=	NOT TO SCALE
OD	=	OUTSIDE DIAMETER
ℙ	=	PLATE
PROP	=	PROPOSED
R/RAD	=	RADIUS
R/W	=	RIGHT-OF-WAY
RDWY	=	ROADWAY
REINF	=	REINFORCEMENT
REQ'D	=	REQUIRED
RF	=	REAR FACE
SB	=	SOUTHBOUND
SHLDR	=	SHOULDER
SPA	=	SPACE/SPACED
SPMT	=	SELF-PROPELLED MODULAR TRANSPORTER
STA	=	STATION
STD	=	STANDARD
ST	=	STREET
SUBSTR	=	SUBSTRUCTURE
SUPERSTR	=	SUPERSTRUCTURE
T&B	=	TOP AND BOTTOM
TPG	=	THROUGH PLATE GIRDER
TYP	=	TYPICAL
UNO	=	UNLESS NOTED OTHERWISE
VERT	=	VERTICAL
WP	=	WORK POINT

Mark	Description	By	Chk'd	Recm'd	Date
REVISIONS					

MPMS/ECMS PROJ: 115877

HNTB

COMMONWEALTH OF PENNSYLVANIA
REGISTERED PROFESSIONAL
ULYSSES C. KOUTSOGIANNIS
ENGINEER
PE073912

PREPARED BY:
HNTB CORPORATION
4507 NORTH FRONT STREET
SUITE 300
HARRISBURG, PA 17110

COMMONWEALTH OF PENNSYLVANIA
DEPARTMENT OF TRANSPORTATION

CLEARFIELD COUNTY
SR 1001 SECTION MTF
SEG 0132 OFFSET 0701
CR 65.60 (CRESSON BRANCH) STA 4+65.11
OVER SR 1001 (RIVER ROAD)
STEEL THROUGH PLATE GIRDER & STEEL THROUGH TRUSS BRIDGE
GENERAL NOTES 1

RECOMMENDED _____

SHEET 2 OF 54

S-1001RJC

2/12/2024
FILENAME: 77861-#013-s-br-gen01.dgn

DES: JAC	DES CKD: MJR	DWG: DAC	DWG CKD: JAC

GENERAL NOTES (CONTINUED)

STRUCTURAL STEEL NOTES:

1. FABRICATE AND ERECT STEEL IN ACCORDANCE WITH AREMA MANUAL FOR RAILWAY ENGINEERING, CHAPTER 15.
2. PROVIDE STRUCTURAL STEEL CONFORMING TO ASTM A709 GRADE 50 DESIGNATION, EXCEPT WHEN NOTED OTHERWISE.
3. GIRDER FIELD SPLICES WILL NOT BE PERMITTED. HAULING PERMIT IS REQUIRED FOR LENGTHS AS SHOWN ON THE PLANS.
4. DO NOT USE SUPPORT SYSTEMS THAT WILL CAUSE UNACCEPTABLE OVERSTRESS OR DEFORMATION TO PERMANENT BRIDGE MEMBERS.
5. ALL FASTENERS ARE 7/8" DIAMETER H.S. BOLTS IN 15/16" DIAMETER OPEN HOLES, EXCEPT AS NOTED. WHEN 1" DIAMETER H.S. BOLTS ARE SPECIFIED, USE 1 1/16" DIAMETER OPEN HOLES.
6. ALL FASTENERS SHALL BE IN ACCORDANCE WITH ASTM F3125 GRADE A325 TYPE 1 (SLIP CRITICAL CLASS B) UNLESS NOTED OTHERWISE. ALL A325 FASTENERS SHALL BE MECHANICALLY GALVANIZED IN ACCORDANCE WITH ASTM B695. ALL A490 FASTENERS SHALL BE COATED IN ACCORDANCE WITH ASTM F1136. ALL FASTENERS SHALL HAVE AN UNTHREADED SHANK OF SUFFICIENT LENGTH TO NOT ALLOW ANY THREADS TO EXIST IN THE PLANE BETWEEN THE TWO CONNECTED PARTS (SHEAR PLANE).
7. USE DIRECT TENSION INDICATORS (DTI'S) CONFORMING TO ASTM F959 TO ENSURE PROPER INSTALLATION OF HIGH STRENGTH BOLTS. OTHER METHODS TO VERIFY PROPER INSTALLATION OF HIGH STRENGTH BOLTS MAY BE USED UPON APPROVAL. THE MINIMUM TENSION OF INSTALLED BOLTS SHALL BE IN ACCORDANCE WITH AREMA TABLE 15-1-12, UNLESS NOTED OTHERWISE.
8. REAM SUBDRILLED OR SUBPUNCHED HOLES FOR FIELD SPLICES IN THE FABRICATION SHOP.
9. DO NOT MAKE WELDS BY MANUAL SHIELDED METAL ARC PROCESS FOR PRIMARY GIRDER WELDS, SUCH AS FLANGE-TO-WEB OR FOR SHOP SPLICES OF WEBS AND FLANGES.
10. DO NOT WELD ATTACHMENTS TO THROUGH GIRDER, FLOORBEAM, OR END BEAM BOTTOM FLANGES (TENSION ZONES) EXCEPT AS SHOWN.
11. PAINT STRUCTURAL STEEL IN ACCORDANCE WITH PUBLICATION 408, SECTION 1060. THE FINISH PAINT COAT OF ALL FABRICATED STRUCTURAL STEEL MEMBERS IS TO MATCH THE COLOR OF THE EXISTING ADJACENT TRUSS TO REMAIN. SUBMIT THREE (3) COLOR SAMPLES TO THE DEPARTMENT FOR ACCEPTANCE BY THE DISTRICT BRIDGE ENGINEER PRIOR TO APPLICATION.
12. PROVIDE CLASS B COATING ON THE FAYING SURFACES OF HIGH STRENGTH BOLTED CONNECTIONS. CLASS B COATINGS PROVIDE A MEAN SLIP COEFFICIENT NOT LESS THAN 0.50 FOR BOLTED CONNECTIONS PER AREMA TABLE 15-1-11A.
13. PREPARE BEARING AREAS AS SPECIFIED IN PUBLICATION 408, SECTION 1001.3(K)9.
14. PROVIDE CHARPY V-NOTCH (CVN) TESTING FOR ZONE 2 IN ACCORDANCE WITH PUBLICATION 408, SECTION 1105.02(A)5. TEST THE FOLLOWING COMPONENTS SUBJECT TO TENSILE STRESS IN ACCORDANCE WITH THESE REQUIREMENTS:
    A. THROUGH GIRDER WEBS
    B. THROUGH GIRDER BOTTOM FLANGE
    C. END BEAM WEB
    D. END BEAM BOTTOM FLANGE
    E. FLOORBEAMS
    F. CONNECTION PLATES AND ANGLES
15. FABRICATE ALL MEMBERS OR MEMBER COMPONENTS DESIGNATED AS FRACTURE CRITICAL MEMBERS (FCM) TO CONFORM TO THE REQUIREMENTS OF DESIGN MANUAL, PART 4, SECTION 6, ARTICLE D6.6.2, AASHTO LRFD BRIDGE DESIGN SPECIFICATIONS, ARTICLE 6.6.2, AND PUBLICATION 408, SECTIONS 1105.02(A)5 AND 1105.03(M)9. MEET THE BASE METAL CHARPY V-NOTCH (CVN) REQUIREMENTS FOR ZONE 2. THE FOLLOWING MEMBERS ARE DESIGNATED AS FCM:
    A. THROUGH GIRDERS
    B. END BEAMS
16. STABILITY OF PARTIAL GIRDERS AND COMPLETE GIRDERS IS TO BE MAINTAINED BY THE CONTRACTOR DURING ERECTION UNTIL ALL GIRDERS AND DIAPHRAGMS ARE IN-PLACE AND ALL BOLTS ARE PROPERLY INSTALLED. ERECTION LOADS INCLUDING SELF WEIGHT OF THE STEEL MEMBERS, WIND LOADING AND CONSTRUCTION LIVE LOAD EFFECTS ARE TO BE EVALUATED BY THE CONTRACTOR FOR STABILITY, STRESSES AND DEFLECTIONS ON THE STEEL MEMBERS DURING ANY STAGE OF ERECTION.
17. HEAT-CURVED OR HEAT CAMBERED GIRDERS ARE NOT PERMITTED.
18. THE STEEL SUPERSTRUCTURE SHALL BE DETAILED AND FABRICATED FOR TOTAL DEAD LOAD FIT (TDLF). THE CONTRACTOR SHALL ACCOUNT FOR DEFLECTIONS AND ROTATIONS OF THE GIRDERS DURING ERECTION SUCH THAT, AFTER PLACEMENT OF THE FULL DEAD LOAD AT THE END OF CONSTRUCTION, GIRDER WEBS ARE VERTICAL AND BEARING STIFFENERS ARE PLUMB.
19. BLAST CLEAN THE FAYING SURFACES OF SPLICES AND CONNECTIONS OF ALL STRUCTURAL ELEMENTS IN ACCORDANCE WITH PUBLICATION 408 SECTION 1060.3(B)3. REBLAST UNPAINTED ELEMENTS THAT REMAIN UNASSEMBLED FOR A PERIOD OF 12 MONTHS OR MORE FOLLOWING THE INITIAL CLEANING.
20. SHAPE RE-ENTRANT CORNERS OF COPES WITH A RADIUS OF NOT LESS THAN 1" WITH A SMOOTH TRANSITION THAT MEETS THE ADJACENT EDGES WITHOUT OFFSET OR CUTTING PAST THE POINT OF TANGENCY. UNLESS NOTED OTHERWISE, PROVIDE A MINIMUM COPE RADIUS OF 1".
21. GRIND SURFACES OF ALL COPES AND RE-ENTRANT CORNERS SMOOTH TO A BRIGHT METAL SURFACE.
22. WELDING ELECTRODES SHALL BE E70XX IN ACCORDANCE WITH AWS CODE.
23. PROVIDE MINIMUM WELD SIZE ALLOWED PER AREMA FOR FILLET WELDS IF NO WELD SIZE IS SHOWN ON THE PLANS.
24. ALL WELDS SHALL BE SHOP WELDS. FIELD WELDING IS NOT PERMITTED UNLESS NOTED OTHERWISE.
25. ANCHOR BOLTS SHALL BE ASTM F1554, GRADE 105.
26. STEEL SHALL NOT BE CUT BY SHEARING UNLESS APPROVED BY THE ENGINEER OF RECORD.
27. CORRUGATED STEEL PIPE FOR DOWEL POCKETS SHALL BE HOT-DIPPED GALVANIZED IN ACCORDANCE WITH ASTM A123.
28. STRUCTURAL STEEL DECK PLATE SHALL BE HOT-DIPPED GALVANIZED IN ACCORDANCE WITH ASTM A123.
29. FUTURE GROUT INJECTION PORTS FOR THE PRECAST CONCRETE APPROACH SLAB SHALL CONFORM TO ASTM A53 AND SHALL BE HOT-DIPPED GALVANIZED PER ASTM A123. THE PORTS SHALL BE SCHEDULE 40 PIPE WITH NOMINAL DIAMETER OF 2".

EXCAVATION NOTES:

1. SITE CLASS IS NOT CLASS E OR F.
2. EXCAVATE ACCORDING TO CURRENT OSHA OR OTHER APPLICABLE LOCAL, STATE, AND FEDERAL REGULATIONS. PROVIDE TEMPORARY SHORING OF EXCAVATED AREAS AS NECESSARY. IT IS THE CONTRACTORS RESPONSIBILITY TO ENSURE STABILITY OF THE EXCAVATIONS.
3. THE CONTRACTOR IS RESPONSIBLE FOR THE CONTROL OF DRAINAGE DURING CONSTRUCTION. DIRECT RUNOFF AWAY FROM THE EXISTING FOUNDATION FOOTPRINT. SEE E&S PLANS FOR MORE DETAIL.
4. NOTIFY THE DISTRICT GEOTECHNICAL SPECIALIST IF ANY DEVIATIONS FROM THE NOTED SUBSURFACE CONDITIONS ARE ENCOUNTERED DURING CONSTRUCTION.
5. EXCAVATION WILL NOT BE PAID BEYOND THE EXCAVATION PAY LIMITS SHOWN ON SHEET 5.
6. THE CONTRACTOR SHALL NOT USE VIBRATORY COMPACTION FOR THE PLACEMENT OF TEMPORARY FILL.

UTILITY NOTES:

1. COORDINATE, LOCATE, AND CONDUCT ALL WORK RELATED TO PUBLIC AND PRIVATE UTILITIES IN ACCORDANCE WITH PUBLICATION 408, SECTIONS 105.06 AND 107.12.
2. THE CONTRACTOR SHALL VERIFY THAT CRANE AND SELF-PROPELLED MODULAR TRANSPORTER (SPMT) MOVEMENTS WILL NOT IMPACT SERVICE TO BURIED UTILITIES.

EXISTING STRUCTURE NOTES:

1. DO NOT CONSIDER ANY OF THE DATA ON THE EXISTING STRUCTURE SUPPLIED IN THE ORIGINAL DESIGN DRAWINGS OR MADE AVAILABLE TO YOU BY THE DEPARTMENT OR ITS AUTHORIZED AGENTS AS POSITIVE REPRESENTATIONS OF ANY OF THE CONDITIONS THAT YOU WILL ENCOUNTER IN THE FIELD.
2. VERIFY ALL DIMENSIONS AND GEOMETRY OF THE EXISTING STRUCTURE, UTILITIES, AND THEIR APPURTENANCES IN THE FIELD FOR PROPER FIT OF THE PROPOSED CONSTRUCTION. SUBMIT ALL FIELD DIMENSIONS PRIOR TO FABRICATION.
3. THE INFORMATION SHOWN ON THE PLANS FOR THE EXISTING BRIDGE IS NOT PART OF THE PLANS, PROPOSAL, OR CONTRACT AND IS NOT TO BE CONSIDERED A BASIS FOR COMPUTATION OF THE UNIT PRICES USED FOR BIDDING PURPOSES. THERE IS NO EXPRESSED OR IMPLIED AGREEMENT THAT INFORMATION IS CORRECTLY SHOWN. THE BIDDER IS NOT TO RELY ON THIS INFORMATION BUT IS TO ASSUME THE POSSIBILITY THAT CONDITIONS AFFECTING THE COST AND/OR QUANTITIES OF WORK TO BE PERFORMED MAY DIFFER FROM THOSE INDICATED. ORIGINAL DRAWINGS: NONE.
4. REMOVE EXISTING SPAN 1 IN ACCORDANCE WITH THE TRAFFIC CONTROL PLANS AND SPECIAL PROVISIONS.
5. THE EXISTING BRIDGE STRUCTURAL MEMBERS MAY CONTAIN LEAD PAINT AND OTHER TOXIC MATERIALS SUCH AS CADMIUM, CHROMIUM, ARSENIC, ETC.

FIELD WELDING NOTES (WHERE PERMITTED):

1. WELDING SPECIFICATIONS: AASHTO/AWS D1.5M/D1.5 BRIDGE WELDING CODE 2015 CONSISTENT WITH PUB 408 1105.03(M) AND THE CONTRACT SPECIAL PROVISIONS. DO NOT FIELD-WELD ON ANY PART OF THE EXISTING BRIDGE, EXCEPT WHERE SHOWN ON THE DRAWINGS, WITHOUT PRIOR APPROVAL OF THE DISTRICT BRIDGE ENGINEER.
2. WELDING OF EXISTING STRUCTURAL STEEL: USE THE SHIELDED METAL ARC PROCESS AND LOW HYDROGEN ELECTRODES THAT ARE COMPATIBLE WITH THE BASE METAL AS SPECIFIED, AND IN ACCORDANCE WITH AN APPROVED WELD PROCEDURE SPECIFICATION.
3. MAKE TACK WELDS WITH THE SAME TYPE OF ELECTRODE AND INCORPORATE IN THE FINAL WELD. NO OTHER TACK WELDING WILL BE PERMITTED.
4. DO NOT WELD WHEN SURFACES TO BE WELDED ARE MOIST OR EXPOSED TO RAIN, SNOW, OR WIND, OR WHEN WELDERS ARE EXPOSED TO INCLEMENT CONDITIONS THAT WILL ADVERSELY AFFECT THE QUALITY OF THE WORK.
5. DO NOT WELD OR BURN WHEN THE TEMPERATURE IS BELOW 0 DEGREES F. PREHEAT AND MAINTAIN THE TEMPERATURE OF THE METAL TO AT LEAST 70 DEGREES F WHEN THE TEMPERATURE OF THE METAL IS BETWEEN 0 DEGREES F AND 32 DEGREES F DURING WELDING OR BURNING.
6. PREHEAT THE STEEL TO THE SPECIFIED MINIMUM TEMPERATURE FOR A DISTANCE EQUAL TO THE THICKNESS OF THE PART BEING WELDED, BUT NOT LESS THAN 3" IN ALL DIRECTIONS FROM THE POINT OF WELDING.
7. REMOVE BY APPLICATION OF HEAT ANY MOISTURE PRESENT AT POINT OF WELD. PROVIDE WINDBREAKS FOR PROTECTION FROM DIRECT WIND.
8. PRIOR TO PLACING THE WELD, THOROUGHLY CLEAN ALL PORTIONS OF NEW AND EXISTING SURFACES TO RECEIVE WELDS OF ALL FOREIGN MATTER, INCLUDING PAINT FILM, FOR A DISTANCE OF 2" FROM EACH SIDE OF THE OUTSIDE LINES OF THE WELD.
9. TEST COMPLETED WELDS USING VISUAL AND NONDESTRUCTIVE METHODS IN ACCORDANCE WITH AASHTO/AWS D1.5M/D1.5 BRIDGE WELDING CODE CHAPTER 6.

CONSTRUCTION NOTES:

1. THE CONSTRUCTION SEQUENCE SHOWN AND DESCRIBED IN THESE DRAWINGS IS A SUGGESTED SEQUENCE. ITS INCLUSION IN THESE DRAWINGS DOES NOT IMPLY THAT THIS SEQUENCE OR METHOD IS MANDATED. HOWEVER, ANY PROPOSED CONSTRUCTION SEQUENCE MUST COMPLY WITH TRACK OUTAGE LIMITATIONS DEFINED BY THE OWNER. THE MAXIMUM OUTAGE LENGTH DEFINED BY THE OWNER FOR REPLACING THE STRUCTURE IS 96 HOURS.
2. THE CONTRACTOR SHALL SUBMIT A CONSTRUCTION SEQUENCE DETAILING THE SEQUENCE, MEANS, AND METHODS BY WHICH THE BRIDGE WILL BE CONSTRUCTED.
3. THE CONTRACTOR SHALL VERIFY THAT LIFTING AND HANDLING METHODS WILL NOT OVERSTRESS PREFABRICATED ELEMENTS.
4. THE CONTRACTOR IS RESPONSIBLE FOR THE FINAL DESIGN AND DETAILING OF THE TEMPORARY SUPPORT STRUCTURE FOR THE BRIDGE IN THE STAGING AREA, THE EQUIPMENT/FALSEWORK USED TO MOVE THE BRIDGE, THE JACKING SYSTEM REQUIRED TO JACK EXISTING SPAN 2, ANY STRENGTHENING OF EXISTING SPAN 1 REQUIRED FOR DEMOLITION, ANY STRENGTHENING OF EXISTING SPAN 2 REQUIRED FOR VERTICAL JACKING, CONNECTION TO EXISTING SPAN 2 FOR VERTICAL JACKING, THE FINAL LAYOUT OF THE SPMTS, AND VERIFICATION OF THE ADEQUACY OF THE PROPOSED TRAVEL PATH. DESIGN TEMPORARY SUPPORTS IN ACCORDANCE WITH THE AASHTO GUIDE DESIGN SPECIFICATIONS FOR BRIDGE TEMPORARY WORKS.
5. THE CONTRACTOR SHALL DESIGN AND DETAIL A SYSTEM TO MONITOR DEFLECTIONS AND TWIST OF THE BRIDGE SYSTEM DURING THE BRIDGE MOVE. THE MEASUREMENT SYSTEM SHALL BE CAPABLE OF BEING MONITORED CONTINUOUSLY DURING THE MOVE.
6. THE CONTRACTOR SHALL VERIFY THE ADEQUACY OF THE PROPOSED BRIDGE STRUCTURE WHEN USING SPMT LIFTING POINTS AS SHOWN IN THE PLANS. THE CONTRACTOR SHALL PROVIDE A FULL ANALYSIS OF THE BRIDGE STRUCTURE IF SPMT LIFTING POINTS ARE NOT CONSISTENT WITH THE ASSUMED LOCATIONS LISTED IN THE PLANS OR IF FALSEWORK DOES NOT PROVIDE SUPPORT THAT IS CONSISTENT WITH THE ASSUMED SUPPORT CONDITIONS.
7. THE CONTRACTOR SHALL EVALUATE THE GLOBAL STABILITY OF ABUTMENT 1 AND PIER 1 DURING THE REMOVAL OF THE EXISTING SPAN AND VERTICAL JACKING OF THE ADJACENT SPAN.
8. AT A MINIMUM, THE CONTRACTOR SHALL MONITOR THE STABILITY OF THE EXISTING STRUCTURE (ABUTMENT 1, PIER 1, SPAN 1, PIER 2, SPAN 2) DURING CONSTRUCTION OPERATIONS. CONSTRUCTION OPERATIONS SHALL BE HALTED IF CONDITIONS ARE DEEMED TO BE UNSAFE.
9. THE CONTRACTOR SHALL HAVE AN ENGINEER, REGISTERED IN THE COMMONWEALTH OF PENNSYLVANIA, OVERVIEW THE PREPARATION OF THE CALCULATIONS, DRAWINGS, AND DETAILS OF THE CONSTRUCTION SEQUENCE AND SEAL EACH ITEM SUBMITTED.
10. THE CONTRACTOR SHALL OBTAIN APPROVAL OF THE CONSTRUCTION SEQUENCE FROM THE OWNER, THE DEPARTMENT, AND THE ENGINEER OF RECORD BEFORE BEGINNING WORK ON THE BRIDGE.
11. THE CONTRACTOR BEARS FULL RESPONSIBILITY FOR THE CONSTRUCTION SEQUENCE EVEN IF THE SEQUENCE WITHIN THESE PLANS IS FOLLOWED.
12. WORK ON THIS STRUCTURE WILL BE NEAR AN ACTIVE RAILROAD TRACK. COORDINATE ALL OPERATIONS WITH THE OWNER PRIOR TO PERFORMING THIS WORK.
13. REFER TO PROJECT SPECIFICATIONS FOR GUIDANCE ON CONSTRUCTION OPERATIONS.
14. REFER TO E&S PLANS FOR TEMPORARY CAUSEWAY CONSTRUCTION.
15. THE BEARING CAPACITY OF THE BRIDGE STAGING AREA SHALL BE VERIFIED TO BE ADEQUATE BY THE CONTRACTOR FOR USE WITH THEIR CONSTRUCTION EQUIPMENT. THE CONTRACTOR SHALL VERIFY THE FINAL DIFFERENTIAL SETTLEMENTS OF THE TEMPORARY FALSEWORK TO BE ADEQUATE FOR THE SUPPORTED STRUCTURES WITHIN THE BRIDGE STAGING AREA. THE CONTRACTOR IS RESPONSIBLE FOR DETERMINING THE IMPACTS ON THE EXISTING UTILITIES DUE TO SPMT AND OTHER CONSTRUCTION EQUIPMENT USE.

Mark	Description	By	Chk'd	Recm'd	Date
REVISIONS					

MPMS/ECMS PROJ: 115877

HNTB

COMMONWEALTH OF PENNSYLVANIA
REGISTERED PROFESSIONAL
ULYSSES C. KOUTSOGIANNIS
ENGINEER
PE073912

COMMONWEALTH OF PENNSYLVANIA
DEPARTMENT OF TRANSPORTATION

CLEARFIELD COUNTY
SR 1001 SECTION MTF
SEG 0132 OFFSET 0701
CR 65.60 (CRESSON BRANCH) STA 4+65.11
OVER SR 1001 (RIVER ROAD)
STEEL THROUGH PLATE GIRDER & STEEL THROUGH TRUSS BRIDGE
GENERAL NOTES 2

PREPARED BY:
HNTB CORPORATION
4507 NORTH FRONT STREET
SUITE 300
HARRISBURG, PA 17110

RECOMMENDED _____

SHEET 3 OF 54

S-1001RJC

2/12/2024
FILENAME: 77861-W013-s-br-gen02.dgn

DES: JAC | DES CKD: MJR | DWG: DAC | DWG CKD: JAC

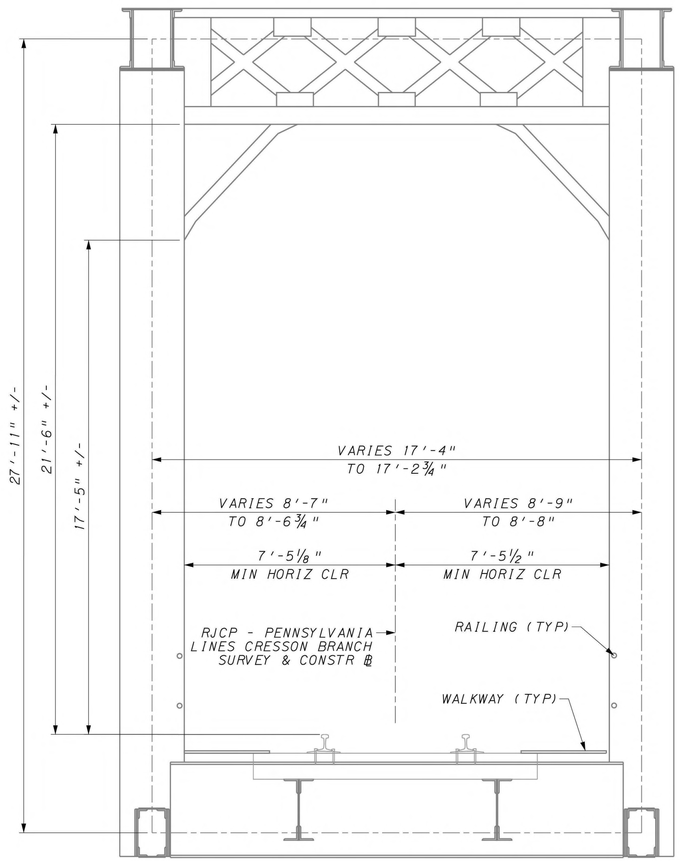

EXISTING TYPICAL SECTION

1 0 1 2 3 FEET

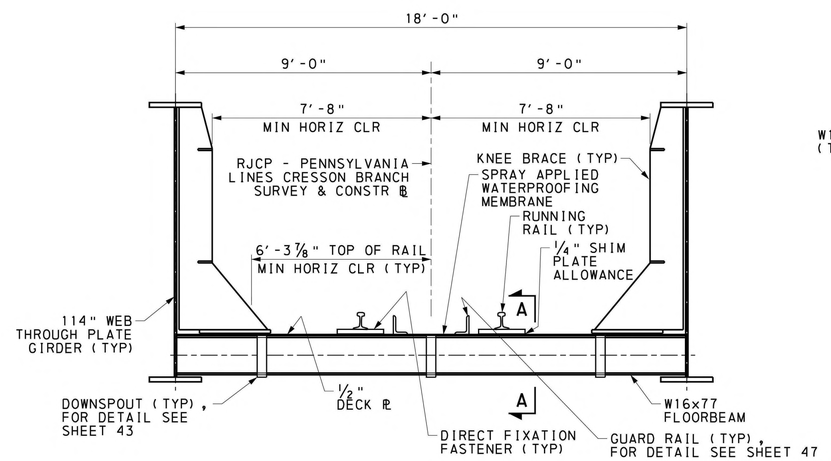

PROPOSED TYPICAL SECTION

1 0 1 2 3 FEET

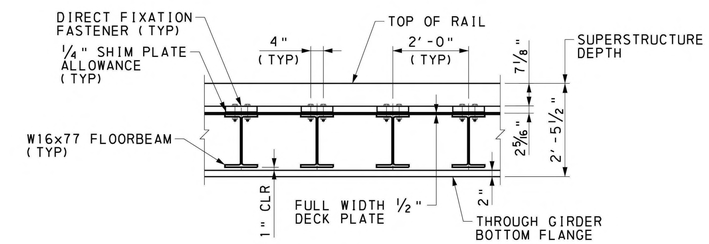

SECTION A-A

1 0 1 2 FEET

NOTE:

1. FOR VERTICAL CLEARANCE CALCULATIONS, A SHIM ALLOWANCE OF ¼" WAS USED.

Mark	Description	By	Chk'd	Recm'd	Date
REVISIONS					

MPMS/ECMS PROJ: 115877

HNTB

COMMONWEALTH OF PENNSYLVANIA
DEPARTMENT OF TRANSPORTATION

CLEARFIELD COUNTY
SR 1001 SECTION MTF
SEG 0132 OFFSET 0701
CR 65.60 (CRESSON BRANCH) STA 4+65.11
OVER SR 1001 (RIVER ROAD)
STEEL THROUGH PLATE GIRDER & STEEL THROUGH TRUSS BRIDGE
TYPICAL SECTION & DETAILS

COMMONWEALTH OF PENNSYLVANIA
REGISTERED PROFESSIONAL
ULYSSES C. KOUTSOGIANNIS
ENGINEER
PE073912

PREPARED BY:
HNTB CORPORATION
4507 NORTH FRONT STREET
SUITE 300
HARRISBURG, PA 17110

RECOMMENDED _____

SHEET 4 OF 54

S-1001RJC

2/12/2024
FILENAME 77861-W013-s-br-typ01.dgn

DES: JAC	DES CKD: MJR	DWG: JTM	DWG CKD: JAC

TABULATION OF BRIDGE BID ITEMS & APPROXIMATE QUANTITIES

QUANTITY	ITEM NUMBER / UNIT	QUANTITY & UNIT	DESCRIPTION	APPR SLAB	ABUT 1	PIER 1	SUPER
LS	8120 0001 / LS	BRIDGE STRUCTURE, AS-DESIGNED, S-1001RJC (SEE NOTE 1)					
		220 CY	CLASS 3 EXCAVATION		220		
		35 SY	MEMBRANE WATERPROOFING SYSTEM INSTALLED ON OTHER SURFACES		35		
		2 CY	CLASS AAA CEMENT CONCRETE ACCELERATED, 5 KSI (SEE NOTE 1)		1	1	
		56 EA	DOWEL HOLES, 28" DEEP		24	32	
		1,276 LF	PRESSURE MORTAR POINTING		460	816	
		LS	REMOVAL OF PORTION OF EXISTING BRIDGE (SEE NOTES 1 & 7)				
		117 SY	PROTECTIVE COATING FOR REINFORCED CONCRETE SURFACES (PENETRATING SEALERS, REINFORCED CONCRETE SUBSTRUCTURE SURFACES) (SEE NOTE 10)	24	38	55	
		374,400 LB	FABRICATED STRUCTURAL STEEL (SEE NOTE 3)				374400
		2 EA	HIGH LOAD MULTI-ROTATIONAL BEARINGS - FIXED				2
		4 EA	HIGH LOAD MULTI-ROTATIONAL BEARINGS - NON-GUIDED EXPANSION				4
		2 EA	LAMINATED NEOPRENE BEARING PAD				2
		23 LF	DOWNSPOUTING (SEE NOTE 9)				23
		9 LF	EPOXY INJECTION CRACK SEAL, STONE MASONRY (SEE NOTE 1)		5	4	
		1 EA	PRECAST CONCRETE, ABUTMENT CAP (SEE NOTES 1 & 5)		1		
		1 EA	PRECAST CONCRETE, PIER CAP (SEE NOTES 1 & 6)			1	
		1 EA	PRECAST CONCRETE, APPROACH SLAB (SEE NOTES 1 & 11)	1			
		390 SY	SPRAY APPLIED WATERPROOFING MEMBRANE - SUPERSTRUCTURE (SEE NOTE 1)				390
		100 CF	NON-SHRINK GROUT (SEE NOTE 1)		50	50	
		LS	JACKING BRIDGE SUPERSTRUCTURE (SEE NOTE 1)				
		LS	JACKING BRIDGE SUPERSTRUCTURE, ENGINEERING (SEE NOTE 1)				
		LS	GEOSYNTHETIC REINFORCED SOIL BACKFILL (SEE NOTES 1 & 4)				
		LS	SELF PROPELLED MODULAR TRANSPORTER, ENGINEERING (SEE NOTE 1)				
		LS	SELF PROPELLED MODULAR TRANSPORTER, TEMPORARY SUBSTRUCTURES (SEE NOTE 1)				
		LS	SELF PROPELLED MODULAR TRANSPORTER, SUPERSTRUCTURE INSTALLATION (SEE NOTE 1)				
		LS	SELF PROPELLED MODULAR TRANSPORTER, EXISTING SUPERSTRUCTURE REMOVAL (SEE NOTE 1)				
AND 700	1002 0073 / LB	REINFORCEMENT BARS, GALVANIZED			300	400	
LS	9203 0101 / LS	TEMPORARY EXCAVATION SUPPORT AND PROTECTION SYSTEM, S-1001RJC (SEE NOTES 1 AND 8)					

QUANTITY NOTES:

1. REFER TO CONTRACT SPECIAL PROVISIONS.
2. FOR AS DESIGNED STRUCTURE, FOR ALTERNATE DESIGNS, INCLUDE IN STRUCTURE LUMP SUM BID ITEM.
3. PAINTING AND GALVANIZING IS INCIDENTAL TO THIS ITEM. STEEL DECK PLATE SHALL BE GALVANIZED.
4. GEOSYNTHETIC REINFORCED SOIL BACKFILL: INCLUDES 220 CY AASHTO NO. 8 STONE AND 1,700 SY GEOTEXTILE, CLASS 4, TYPE C.
5. PRECAST CONCRETE, ABUTMENT CAP: INCLUDES 35 CY 5 KSI CEMENT CONCRETE AND 7,400 LB OF REINFORCEMENT BARS, EPOXY COATED.
6. PRECAST CONCRETE, PIER CAP: INCLUDES 33 CY 5 KSI CEMENT CONCRETE AND 4,700 LB OF REINFORCEMENT BARS, EPOXY COATED.
7. REMOVAL OF PORTION OF EXISTING BRIDGE: INCLUDES 2,300 SF OF EXISTING BRIDGE TO BE REMOVED. THIS ITEM INCLUDES ENGINEERING EFFORT.
8. TEMPORARY EXCAVATION SUPPORT AND PROTECTION SYSTEM: INCLUDES 3,000 SF OF EXPOSED SURFACE AREA.
9. 4" DIAMETER SCHEDULE 40 PIPE. CAULKING/SEALANT INCIDENTAL TO THIS ITEM.
10. PROTECTIVE COATING SHALL BE APPLIED TO THE TOP, FRONT, BACK, AND SIDE FACES OF THE ABUTMENT SEAT/BACKWALL AND PIER CAP. PROTECTIVE COATING SHALL BE APPLIED TO TOP SURFACE OF APPROACH SLAB.
11. PRECAST CONCRETE, APPROACH SLAB: INCLUDES 16 CY 5 KSI CEMENT CONCRETE AND 3,500 LB OF REINFORCEMENT BARS, EPOXY COATED.
12. FOR TRACKWORK QUANTITIES AND INFORMATION, INCLUDING BUT NOT LIMITED TO DF FASTENERS, RAIL, AND GUARD RAIL, SEE TRACK QUANTITIES, PLANS, AND SPECIFICATIONS.

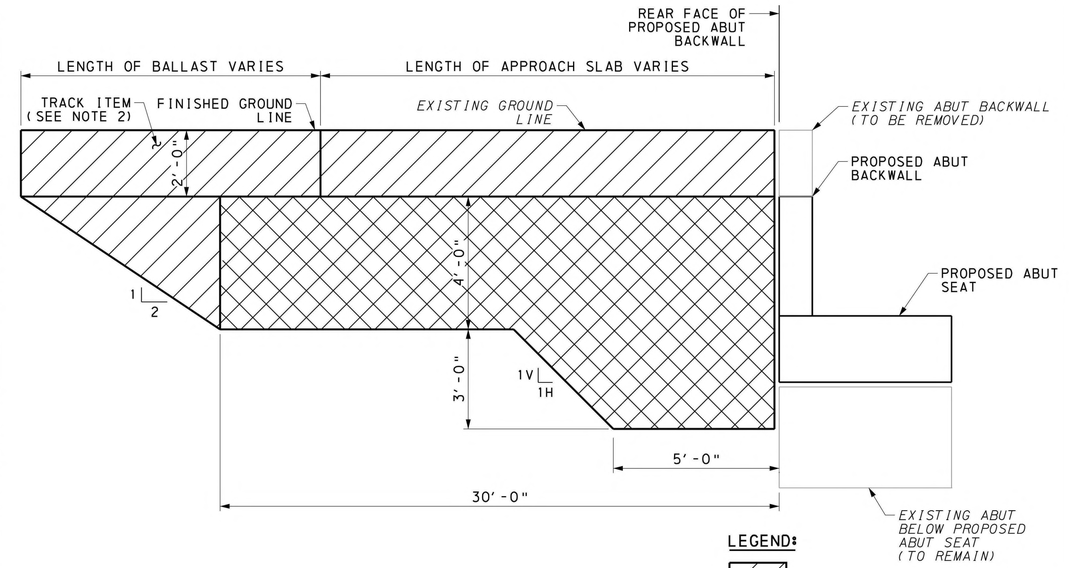

LEGEND:

LIMITS OF CLASS 3 EXCAVATION

LIMITS OF STRUCTURE BACKFILL (GEOSYNTHETIC REINFORCED SOIL BACKFILL)

EXCAVATION PAY LIMITS

NOT TO SCALE
(SEE NOTE 1)

EXCAVATION PAY LIMITS NOTES:

1. FOR MORE DETAIL ON EXCAVATION, SEE GRS & SUBSTRUCTURE DETAILS, SHEET 7.
2. EXCAVATION WITHIN THE BALLAST REGION IS INCLUDED IN CLASS 3 EXCAVATION. BALLAST TO BE USED FOR TRACK RECONSTRUCTION INCLUDED WITHIN TRACK QUANTITIES.

ALTERNATE STRUCTURE ITEMS

ITEM NUMBER	DESCRIPTION	UNIT	TOTAL
8120-0001	BRIDGE STRUCTURE AS DESIGNED, S-1001RJC (SEE NOTE 1)	LS	LUMP SUM
8100-0001	STEEL BRIDGE STRUCTURE (SEE NOTE 1)	LS	LUMP SUM

Mark	Description	By	Chk'd	Recm'd	Date

REVISIONS

MPMS/ECMS PROJ: 115877

HNTB

COMMONWEALTH OF PENNSYLVANIA
REGISTERED PROFESSIONAL
ULYSSES C. KOUTSOGIANNIS
ENGINEER
PE073912

PREPARED BY:
HNTB CORPORATION
4507 NORTH FRONT STREET
SUITE 300
HARRISBURG, PA 17110

COMMONWEALTH OF PENNSYLVANIA
DEPARTMENT OF TRANSPORTATION

CLEARFIELD COUNTY
SR 1001 SECTION MTF
SEG 0132 OFFSET 0701
CR 65.60 (CRESSON BRANCH) STA 4+65.11
OVER SR 1001 (RIVER ROAD)
STEEL THROUGH PLATE GIRDER & STEEL THROUGH TRUSS BRIDGE
SUMMARY OF QUANTITIES

RECOMMENDED _____

SHEET 5 OF 54

S-1001RJC

DES: TED | DES CKD: EMG | DWG: DAC | DWG CKD: JAC

2/12/2024
FILENAME: 77861-M013-s-br-sum01.dgn

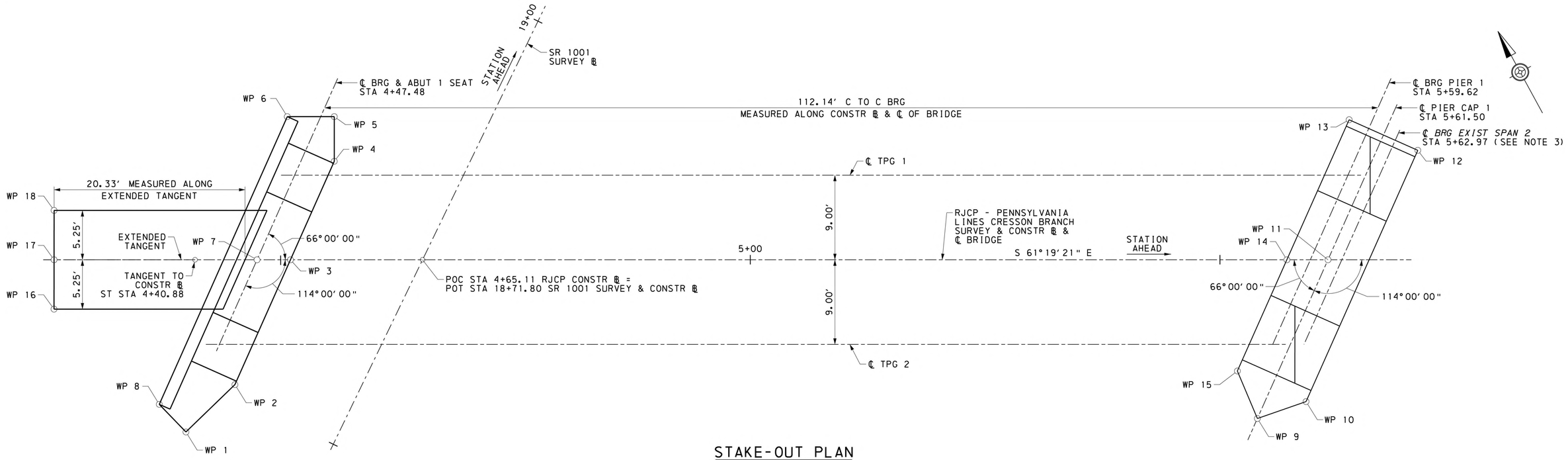

STAKE-OUT PLAN

2 0 2 4 6 FEET

SR 1001 SURVEY & CONSTR ℄ COORDINATES				
POINT	STATION	NORTHING	EASTING	BEARING
PI	17+69.12	316263.6347	1779702.4418	N 54°31'17" E
PC	22+41.32	316537.6967	1780086.9667	

RJCP-PENNSYLVANIA LINES CRESSON BRANCH SURVEY & CONSTR ℄				
POINT	STATION	NORTHING	EASTING	BEARING
CS	3+47.88	316378.5201	1779682.7010	
$PI_{(S)}$	3+78.89	316364.6075	1779710.4077	
ST	4+40.88	316334.8530	1779764.8060	
POT	6+86.30	316217.0833	1779980.1175	S 61°19'21" E

STAKE-OUT COORDINATES					
WP	BASELINE	STATION	OFFSET	NORTHING	EASTING
1	RJCP BL	4+39.92	18.31' RT	1779755.1670	316319.2501
2	RJCP BL	4+45.13	13.28' RT	1779762.1593	316321.1659
3	RJCP BL	4+51.04	0.00'	1779773.7174	316329.9781
4	RJCP BL	4+55.71	10.47' LT	1779782.8354	316336.9298
5	RJCP BL	4+55.71	15.22' LT	1779785.1148	316341.0971
6	RJCP BL	4+50.71	15.22' LT	1779780.7278	316343.4967
7	RJCP BL	4+47.48	0.00'	1779770.5962	316331.6853
8	RJCP BL	4+37.08	15.38' RT	1779754.0885	316323.1863
9	RJCP BL	5+53.98	16.88' RT	1779855.9289	316265.7700
10	RJCP BL	5+53.98	15.08' RT	1779861.3362	316264.8627
11	RJCP BL	5+61.50	0.00'	1779870.6234	316276.9734
12	RJCP BL	5+71.06	11.64' LT	1779884.5968	316282.5970
13	RJCP BL	5+63.75	14.89' LT	1779879.7464	316288.9589
14	RJCP BL	5+57.12	0.00'	1779866.7819	316279.0745
15	RJCP BL	5+51.85	11.83' RT	1779856.4858	316271.2246
16	RJCP BL	4+25.87	5.25' RT	1779749.1157	316337.4505
17	RJCP BL	4+25.88	0.00'	1779751.6382	316342.0548
18	RJCP BL	4+25.88	5.25' LT	1779754.1607	316346.6591

FOUR PLACE COORDINATES ARE FOR COMPUTATIONAL PURPOSES ONLY AND DO NOT IMPLY A PRECISION BEYOND TWO DECIMAL POINTS.

WORK POINT CLOSURE DISTANCES	
WP TO WP	DISTANCE
1 TO 13	128.21'
5 TO 15	99.88'

NOTES:

1. ALL STATIONS ARE GIVEN ALONG RJCP-PENNSYLVANIA LINES CRESSON BRANCH SURVEY & CONSTR ℄.
2. ℄ BRIDGE CORRESPONDS TO TANGENT AND EXTENDED TANGENT OF RJCP-PENNSYLVANIA LINES CRESSON BRANCH SURVEY & CONSTR ℄.
3. CONTRACTOR SHALL FIELD VERIFY STATION OF EXISTING SPAN 2 CENTERLINE OF BEARING.
4. WP 17 IS LOCATED AT THE INTERSECTION OF EXTENDED TANGENT AND WEST END OF APPROACH SLAB AT ℄ OF APPROACH SLAB.

Mark	Description	By	Chk'd	Recm'd	Date
REVISIONS					

MPMS/ECMS PROJ: 115877

HNTB

COMMONWEALTH OF PENNSYLVANIA
DEPARTMENT OF TRANSPORTATION

COMMONWEALTH OF PENNSYLVANIA
REGISTERED PROFESSIONAL
ULYSSES C. KOUTSOGIANNIS
ENGINEER
PE073912

CLEARFIELD COUNTY
SR 1001 SECTION MTF
SEG 0132 OFFSET 0701
CR 65.60 (CRESSON BRANCH) STA 4+65.11
OVER SR 1001 (RIVER ROAD)
STEEL THROUGH PLATE GIRDER & STEEL THROUGH TRUSS BRIDGE
STAKE-OUT PLAN

PREPARED BY:
HNTB CORPORATION
4507 NORTH FRONT STREET
SUITE 300
HARRISBURG, PA 17110

RECOMMENDED _____

SHEET 6 OF 54

S-1001RJC

2/12/2024
FILENAME: 17861-W013-s-br-sop01.dgn

DES: JAC	DES CKD: UCK	DWG: JTM	DWG CKD: JAC

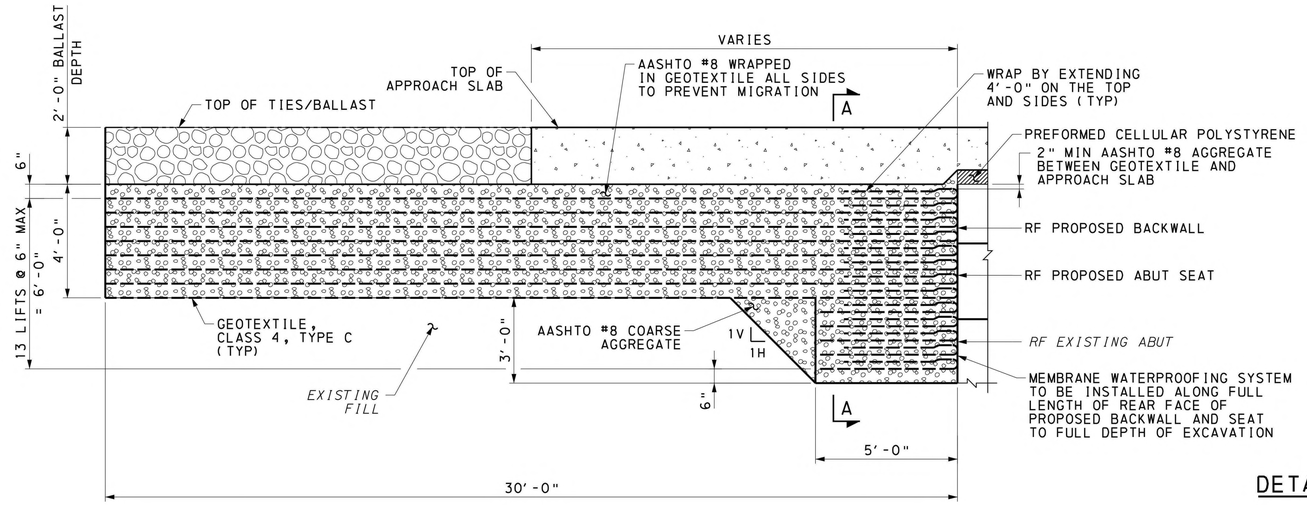

GEOSYNTHETIC REINFORCED SOIL DETAIL

1 0 1 2 3

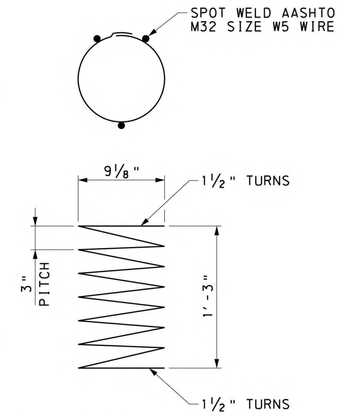

DETAIL OF SIZE W5 WIRE

NOT TO SCALE

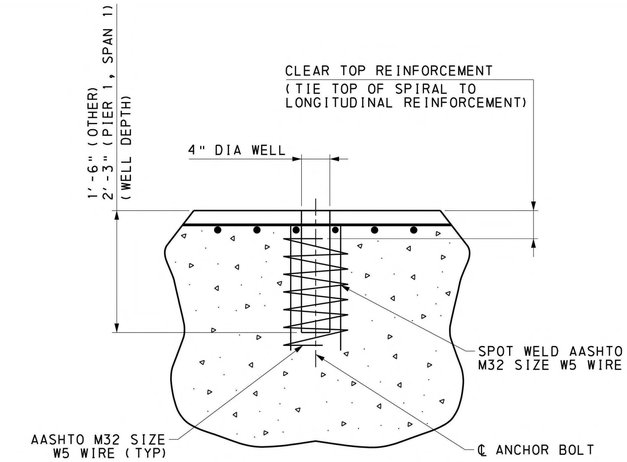

DETAIL OF ANCHOR BOLT WELL

NOT TO SCALE

ANCHOR BOLT WELL AND DOWEL POCKET NOTES:

1. ALL REINFORCING BARS IN THE TOP OF THE ABUTMENT SEAT OR PIER CAP SHALL BE SPACED TO CLEAR ANCHOR BOLT WELLS FOR BEARINGS AND DOWEL POCKETS BY AT LEAST 1/2".
2. FOR STIRRUPS, WHERE MAXIMUM SPACINGS CREATE CONFLICT WITH ANCHOR BOLT WELLS OR DOWEL POCKETS, A STIRRUP MAY BE SHIFTED UP TO ONE MAXIMUM SPACING OR BUNDLED WITH NEIGHBORING STIRRUPS. IN NO CASE SHALL THE SPACE BETWEEN NEIGHBORING SETS OF STIRRUPS EXCEED TWICE THE MAXIMUM SPACING. IF SPACING EXCEEDS TWICE THE MAXIMUM SPACING, THE CONTRACTOR SHALL CONTACT THE ENGINEER OF RECORD FOR APPROVAL.
3. SEE GENERAL NOTES FOR ANCHOR BOLT INSTALLATION PROCEDURE.
4. ANCHOR BOLT WELLS SHALL NOT BE FORMED WITH GALVANIZED CORRUGATED STEEL PIPE.

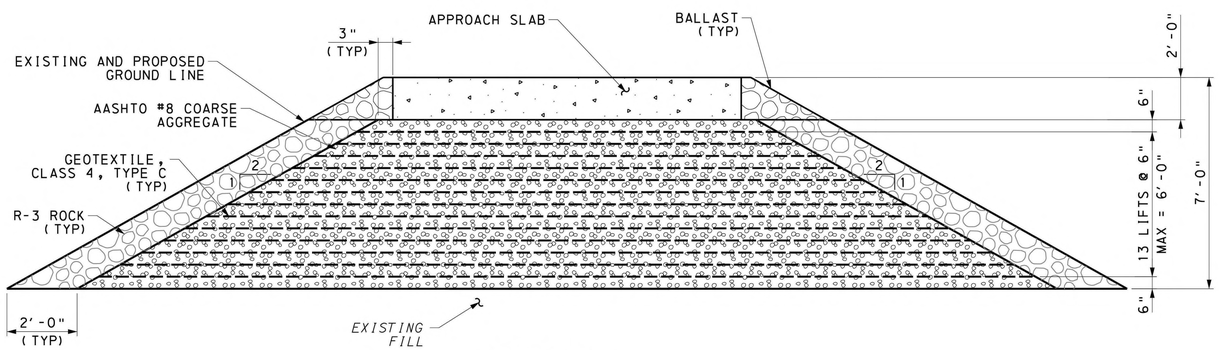

SECTION A-A

NOT TO SCALE

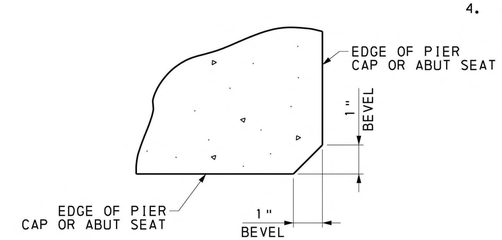

PIER CAP & ABUT SEAT CHAMFER DETAIL

NOT TO SCALE

GRS NOTES:

1. CONSTRUCT GRS UTILIZING CLASS 4, TYPE C GEOTEXTILE IN ACCORDANCE WITH PUBLICATION 408, SECTION 735 AND 212 WITH A MINIMUM ULTIMATE STRENGTH OF 4,800LB/FT. THE GEOTEXTILE SHALL BE SPACED AT A VERTICAL SPACING OF 6 INCHES.
2. UTILIZE AASHTO #8 FOR THE SPECIFIED BACKFILL OF THE GRS.
3. COMPACTION: COMPACT BACKFILL TO A MINIMUM OF 95% OF THE MAXIMUM DRY DENSITY ACCORDING TO AASHTO-T-99 AND ± 2% OPTIMUM MOISTURE CONTENT. THE COMPACTED THICKNESS SHALL BE 6" PER LIFT IN REINFORCED BACKFILL. ONLY HAND OPERATED COMPACTION EQUIPMENT IS ALLOWED WITHIN 3 FEET OF THE REAR FACE OF ABUTMENT. COMPACT OPEN-GRADED MATERIAL TO OBTAIN A STATE OF NON-MOVEMENT AND A MINIMUM OF 3 PASSES OF VIBRATION EQUIPMENT.
4. GEOSYNTHETIC REINFORCEMENT PLACEMENT: PLACE FIRST LAYER OF GEOTEXTILE 6 INCHES FROM BOTTOM OF EXCAVATION. PULL THE GEOSYNTHETIC TAUT TO REMOVE ANY WRINKLES AND LAY FLAT PRIOR TO PLACING AND COMPACTING THE BACKFILL MATERIAL. WRAPPED CORNERS NEED TO BE TIGHT WITHOUT EXPOSED SOIL. STAGGER SPLICES AT LEAST 24" APART. NO EQUIPMENT IS ALLOWED DIRECTLY ON THE GEOSYNTHETIC. PLACE A MINIMUM OF 6" LAYER OF GRANULAR FILL PRIOR TO OPERATING ONLY RUBBER-TIRED EQUIPMENT OVER THE GEOSYNTHETIC AT SPEEDS LESS THAN 5 MILES PER HOUR WITH NO SUDDEN BRAKING OR SHARP TURNING. THE TOP FINAL WRAP SHOULD BE A MIN OF 2" BELOW THE TOP OF THE FINAL LAYER TO ALLOW AT LEAST 2" OF AGGREGATE BASE COVER OVER THE GEOSYNTHETIC.
5. PLACE A MINIMUM OF 2 FEET, MEASURED HORIZONTALLY, OF R-3 ROCK ALONG THE EDGES OF THE EMBANKMENT ACCORDING TO PENNDOT PUB 408, SECTION 206.

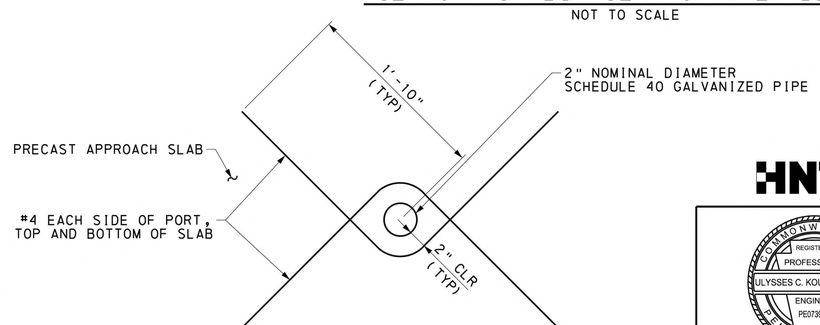

FUTURE GROUT INJECTION PORT DETAIL

NOT TO SCALE

Mark	Description	By	Chk'd	Recm'd	Date

REVISIONS

MPMS/ECMS PROJ: 115877

HNTB

COMMONWEALTH OF PENNSYLVANIA
DEPARTMENT OF TRANSPORTATION

CLEARFIELD COUNTY
SR 1001 SECTION MTF
SEG 0132 OFFSET 0701
CR 65.60 (CRESSON BRANCH) STA 4+65.11
OVER SR 1001 (RIVER ROAD)
STEEL THROUGH PLATE GIRDER & STEEL THROUGH TRUSS BRIDGE
GRS & SUBSTRUCTURE DETAILS

COMMONWEALTH OF PENNSYLVANIA
REGISTERED PROFESSIONAL
ULYSSES C. KOUTSOGIANNIS
ENGINEER
PE073912

PREPARED BY:
HNTB CORPORATION
4507 NORTH FRONT STREET
SUITE 300
HARRISBURG, PA 17110

RECOMMENDED _____

SHEET 7 OF 54

S-1001RJC

2/12/2024
FILENAME: 77861-M013-s-br-det01.dgn

DES: JAC	DES CKD: UCK	DWG: DAC	DWG CKD: JAC

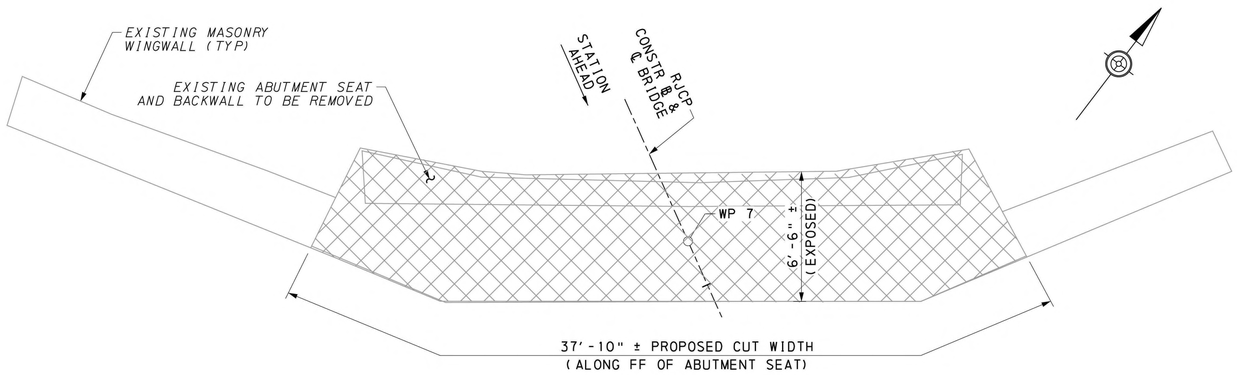

EXISTING ABUTMENT 1 - PLAN

2 0 2 4 FEET

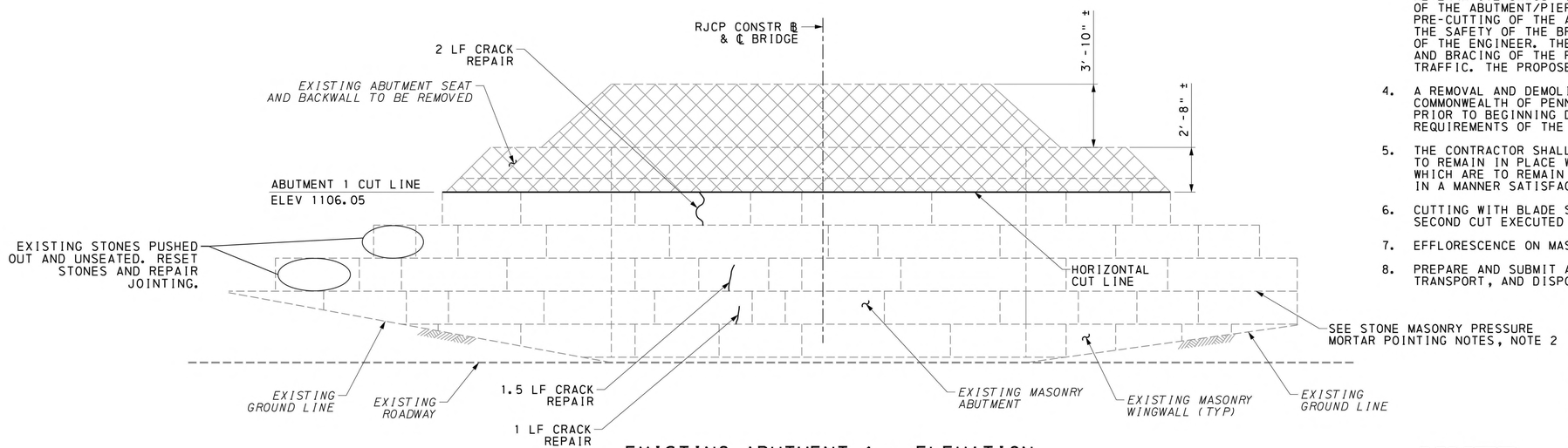

EXISTING ABUTMENT 1 - ELEVATION

2 0 2 4 FEET

(ALONG FF WALL)

LEGEND:

REMOVE EXISTING CONCRETE

EPOXY INJECTION CRACK SEAL

STONE MASONRY PRESSURE MORTAR POINTING NOTES:

1. MASONRY JOINTS WITHIN THE LIMITS SHOWN SHALL BE INSPECTED FOR DETERIORATION. ALL DETERIORATED MORTAR SHALL BE REPOINTED.
2. BASED ON A FIELD EVALUATION OF THE EXISTING MASONRY JOINTS, APPROX 80% OF THE MASONRY JOINTS AT ABUTMENT 1 AND 70% OF MASONRY JOINTS AT PIER 1 WILL REQUIRE REPOINTING.
3. VEGETATION GROWING IN JOINTS SHALL BE SUFFICIENTLY REMOVED TO ALLOW FOR INSTALLATION OF POINTING.
4. REMOVE ALL DETERIORATED AND LOOSE MORTAR A MINIMUM OF 2 TIMES THE WIDTH OF THE JOINT OR UNTIL SOUND MORTAR IS REACHED TO ENSURE ADEQUATE BOND.
5. CLEAN MORTAR JOINTS USING HAND TOOLS OR PNEUMATIC CHISEL, LEAVING SQUARE CUTS AT REAR OF JOINT IF POSSIBLE. DEBRIS SHALL BE REMOVED FROM JOINT USING COMPRESSED AIR.
6. BEFORE REPOINTING MORTAR, DAMPEN MASONRY SURFACES AND JOINTS. ENSURE NO STANDING WATER IS PRESENT.
7. FINISH POINT THE MASONRY USING A POINTING TOOL.
8. NEW POINTING SHALL MATCH THE WIDTH AND FINISH OF THE ADJACENT MORTAR JOINTS.

CRACK REPAIR NOTES:

1. CRACKS SHALL BE REPAIRED USING LOW-PRESSURE INJECTED EPOXY AS DESCRIBED IN THE SPECIFICATIONS.
2. CRACKS SHALL BE CLEANED FROM ALL DEBRIS USING COMPRESSED AIR.
3. INSTALL INJECTION PORTS AS REQUIRED BY EQUIPMENT MANUFACTURER. SPACING OF PORT DEVICES SHALL BE ACCOMPLISHED AS REQUIRED TO ACHIEVE TRAVEL OF EPOXY RESIN FOR THE PRESSURE INJECTION GROUTING BETWEEN PORTS AND FILL THE CRACKS TO THE MAXIMUM.
4. AFTER EPOXY RESIN ADHESIVE HAS CURED, PORTING DEVICES (AND SEALANTS) SHALL BE REMOVED AND SUBSTRATE CLEANED AS REQUIRED BY THE ENGINEER.

SUBSTRUCTURE REMOVAL NOTES:

1. EXISTING SUBSTRUCTURES SHALL BE PARTIALLY REMOVED WITHIN THE LIMITS SHOWN ON THIS SHEET AND SHEET 12. COORDINATE REMOVAL WITH SUGGESTED CONSTRUCTION SEQUENCE ON STAGING PLAN & ELEVATION SHEETS.
2. ALL SUBSTRUCTURE REMOVAL SHALL BE DONE BY SAWCUTTING AND LIFTING OUT. CUT SURFACES SHALL BE LOCATED AS SHOWN ON THE PLANS WITHIN A TOLERANCE OF ± 1/2". SURVEY THE ELEVATION OF THE CUT LINES AT EVERY 5 FEET AND SUBMIT FOR THE ENGINEER'S REVIEW. ALL CUT SURFACES SHALL BE LEVEL.
3. EXISTING SUBSTRUCTURE SHALL BE REMOVED BY SAWCUTTING. USE OF WALLSAWS OR OTHER ALTERNATIVE SAWCUTTING METHODS MAY BE USED TO ACHIEVE A FULL DEPTH, LEVEL CUT OF THE ABUTMENT/PIER AT THE NOTED ELEVATIONS. TO MEET THE ACCELERATED SCHEDULE, PRE-CUTTING OF THE ABUTMENT/PIER IN SECTIONS AND/OR TO DEPTHS THAT DO NOT AFFECT THE SAFETY OF THE BRIDGE TO CARRY TRAFFIC COULD BE CARRIED OUT SUBJECT TO APPROVAL OF THE ENGINEER. THE REMOVAL AND DEMOLITION PLAN SHALL DETAIL THE PLANNED SHIMMING AND BRACING OF THE PRE-CUT SECTION TO MAINTAIN STABILITY AND SAFETY WHEN CARRYING TRAFFIC. THE PROPOSED PRE-CUTTING SHALL BE DETAILED IN THE REMOVAL PLAN SUBMITTAL.
4. A REMOVAL AND DEMOLITION PLAN, SIGNED BY A REGISTERED PROFESSIONAL ENGINEER IN THE COMMONWEALTH OF PENNSYLVANIA, SHALL BE SUBMITTED TO THE ENGINEER THIRTY (30) DAYS PRIOR TO BEGINNING DEMOLITION. THE REMOVAL AND DEMOLITION PLAN/METHOD SHALL MEET THE REQUIREMENTS OF THE REPLACEMENT SCHEDULE.
5. THE CONTRACTOR SHALL PERFORM ALL WORK WITH CARE SO THAT ANY MATERIALS WHICH ARE TO REMAIN IN PLACE WILL NOT BE DAMAGED. IF THE CONTRACTOR DAMAGES ANY MATERIALS WHICH ARE TO REMAIN IN PLACE, THE DAMAGED MATERIALS SHALL BE REPAIRED OR REPLACED IN A MANNER SATISFACTORY TO THE ENGINEER AT THE EXPENSE OF THE CONTRACTOR.
6. CUTTING WITH BLADE SAWS MAY NEED ACCESS TO BOTH SIDES OF THE ABUTMENT, WITH THE SECOND CUT EXECUTED AFTER BACKFILL EXCAVATION.
7. EFFLORESCENCE ON MASONRY BLOCKS TO REMAIN SHALL BE REMOVED.
8. PREPARE AND SUBMIT ALL DOCUMENTS TO OBTAIN PERMITS AND APPROVALS NECESSARY TO REMOVE, TRANSPORT, AND DISPOSE OF THE DEMOLISHED STRUCTURE.

Mark	Description	By	Chk'd	Recm'd	Date
REVISIONS					

MPMS/ECMS PROJ: 115877

HNTB

COMMONWEALTH OF PENNSYLVANIA
REGISTERED PROFESSIONAL
ULYSSES C. KOUTSOGIANNIS
ENGINEER
PE073912

COMMONWEALTH OF PENNSYLVANIA
DEPARTMENT OF TRANSPORTATION

CLEARFIELD COUNTY
SR 1001 SECTION MTF
SEG 0132 OFFSET 0701
CR 65.60 (CRESSON BRANCH) STA 4+65.11
OVER SR 1001 (RIVER ROAD)
STEEL THROUGH PLATE GIRDER & STEEL THROUGH TRUSS BRIDGE

ABUTMENT 1 REPAIR & DEMO DETAILS

PREPARED BY:
HNTB CORPORATION
4507 NORTH FRONT STREET
SUITE 300
HARRISBURG, PA 17110

RECOMMENDED _____

SHEET 8 OF 54

S-1001RJC

2/12/2024
FILENAME: 77861-W013-s-br-dem01.dgn

DES: JAC	DES CKD: UCK	DWG: DAC	DWG CKD: JAC

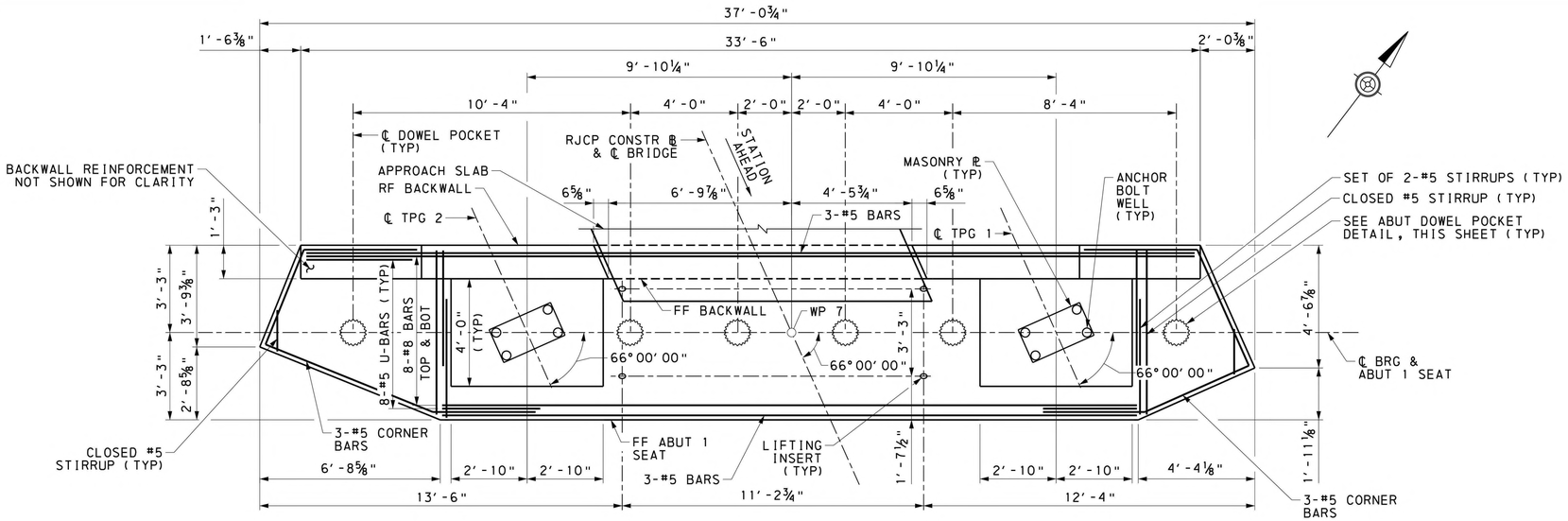

ABUTMENT 1 - PLAN OF SEAT AND BACKWALL

1 0 1 2 3 FEET

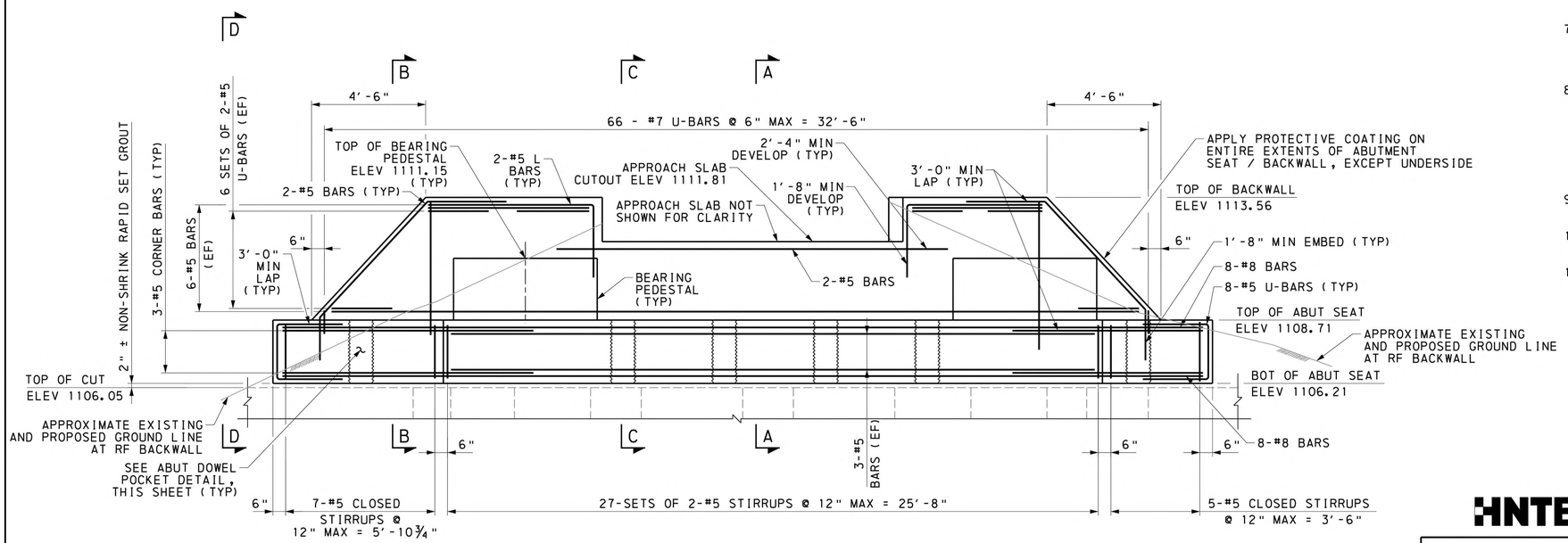

ABUTMENT 1 - ELEVATION

1 0 1 2 3 FEET

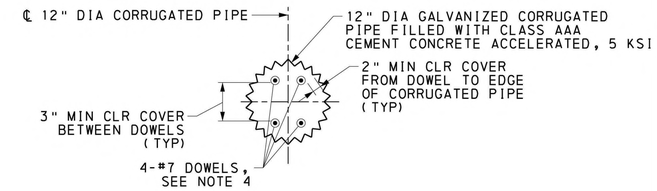

ABUT DOWEL POCKET DETAIL

3 0 3 INCHES

NOTES:

1. FOR STAKE-OUT PLAN, SEE SHEET 6.
2. FOR ABUTMENT 1 SECTIONS & DETAILS, SEE SHEET 10.
3. DOWELS SHALL BE GALVANIZED. DOWELS SHALL BE DRILLED AND INSTALLED AFTER THE PRECAST ABUTMENT SEAT IS ERECTED ON TOP OF THE EXISTING ABUTMENT TO REMAIN.
4. CORRUGATED STEEL PIPE USED FOR THE DOWEL POCKET DETAIL SHALL BE GALVANIZED BASED ON PROJECT SPECIFICATIONS.
5. SEE SHEET 7 FOR SUBSTRUCTURE DETAILS.
6. NON-SHRINK GROUT BED SHALL BE ADJUSTED AS APPROVED BY THE ENGINEER TO MEET INSTALLED TOP OF PRECAST ELEVATIONS AS INDICATED ON THE PLANS.
7. LIFTING INSERTS AND 12" DIA CORRUGATED PIPE ARE INCIDENTAL TO THE ITEM "PRECAST CONCRETE, ABUTMENT CAP". LIFTING INSERTS PROVIDED BY THE CONTRACTOR SHALL BE FILLED WITH NON-SHRINK GROUT AFTER INSTALLATION.
8. THE CONTRACTOR SHALL SUBMIT SHOP DRAWINGS AND ANY SUPPLEMENTAL CALCULATIONS FOR THE PRECAST ABUTMENT SEAT. THE SHOP DRAWINGS AND CALCULATIONS SHALL BE SIGNED AND SEALED BY A PROFESSIONAL ENGINEERING LICENSED IN THE COMMONWEALTH OF PENNSYLVANIA. BASED ON SITE CONSTRAINTS AND CRANE CAPACITIES, THE CONTRACTOR MAY ELECT TO ERECT THE PRECAST ABUTMENT AS MULTIPLE SEGMENTS. IF MULTIPLE SEGMENTS ARE PROVIDED, TRANSVERSE CONTINUITY SHALL BE MADE WITH SHEAR KEY / COUPLER SYSTEMS.
9. THE CONTRACTOR SHALL VERIFY THE ADEQUACY OF THE PRECAST SECTION FOR TRANSPORTATION FROM CASTING YARD TO SITE.
10. THE CONTRACTOR SHALL VERIFY THE ADEQUACY OF LIFTING INSERTS AND PROVIDE ANY SUPPLEMENTARY REINFORCEMENT WHEN NECESSARY.
11. FOR ABUTMENT 1 APPROACH SLAB, SEE SHEET 11.

Mark	Description	By	Chk'd	Recm'd	Date
REVISIONS					

MPMS/ECMS PROJ: 115877

HNTB

COMMONWEALTH OF PENNSYLVANIA REGISTERED PROFESSIONAL ULYSSES C. KOUTSOGIANNIS ENGINEER PE073912

PREPARED BY:
HNTB CORPORATION
4507 NORTH FRONT STREET
SUITE 300
HARRISBURG, PA 17110

COMMONWEALTH OF PENNSYLVANIA
DEPARTMENT OF TRANSPORTATION

CLEARFIELD COUNTY
SR 1001 SECTION MTF
SEG 0132 OFFSET 0701
CR 65.60 (CRESSON BRANCH) STA 4+65.11
OVER SR 1001 (RIVER ROAD)
STEEL THROUGH PLATE GIRDER & STEEL THROUGH TRUSS BRIDGE
ABUTMENT 1 PLAN & ELEVATION

RECOMMENDED _____

SHEET 9 OF 54

S-1001RJC

2/12/2024
FILENAME: 77861-W013-s-br-ab111.dgn

DES: TED | DES CKD: JAC | DWG: DAC | DWG CKD: JAC

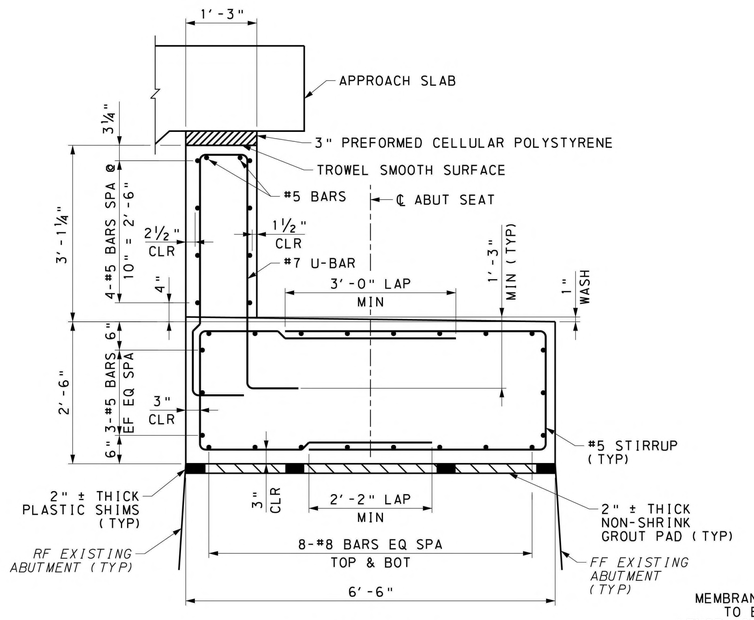

SECTION A-A

12 0 12 INCHES

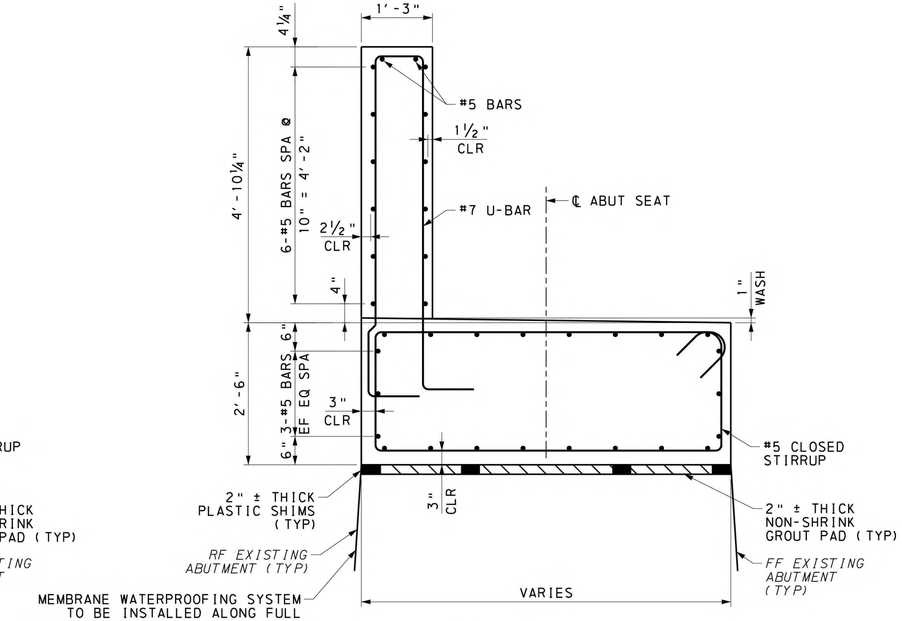

SECTION B-B

12 0 12 INCHES

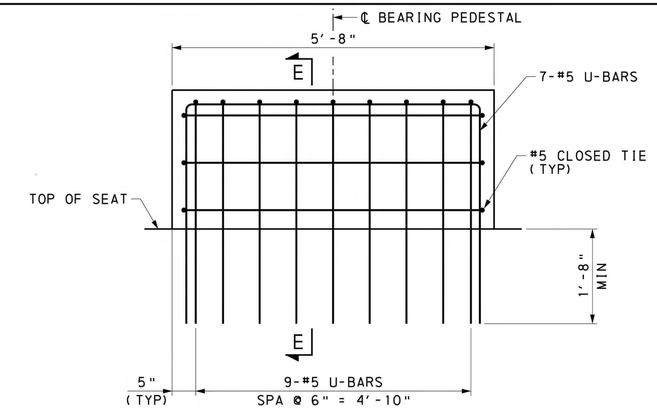

ABUTMENT 1 PEDESTAL ELEVATION

12 0 12 INCHES

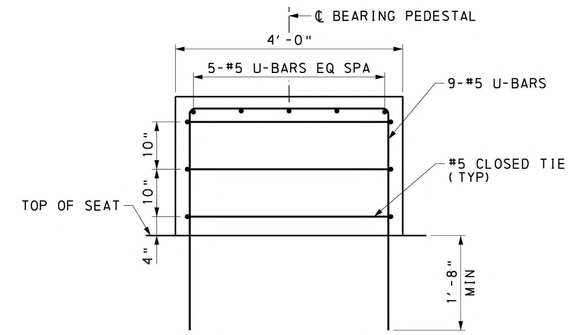

SECTION E-E

12 0 12 INCHES

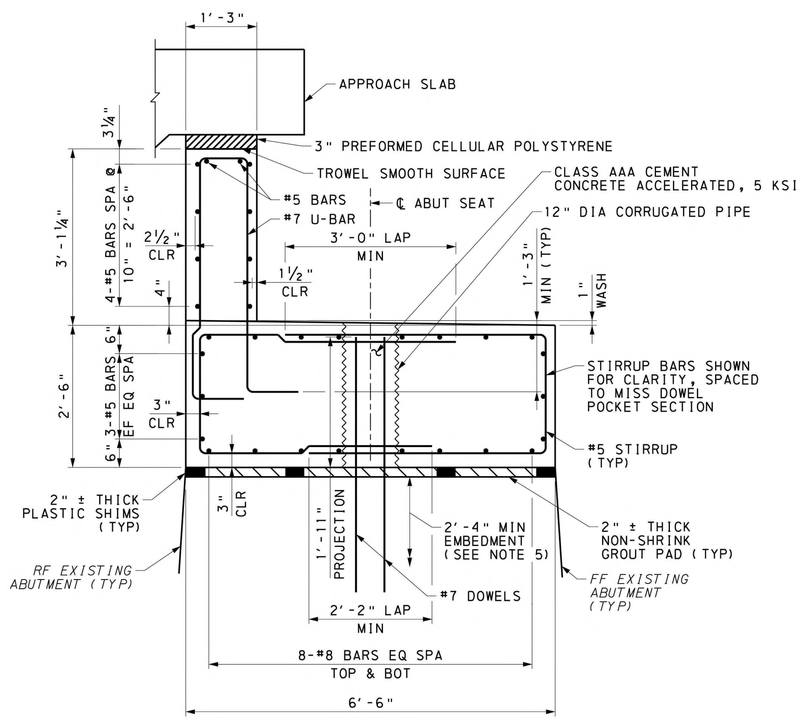

SECTION C-C

12 0 12 INCHES

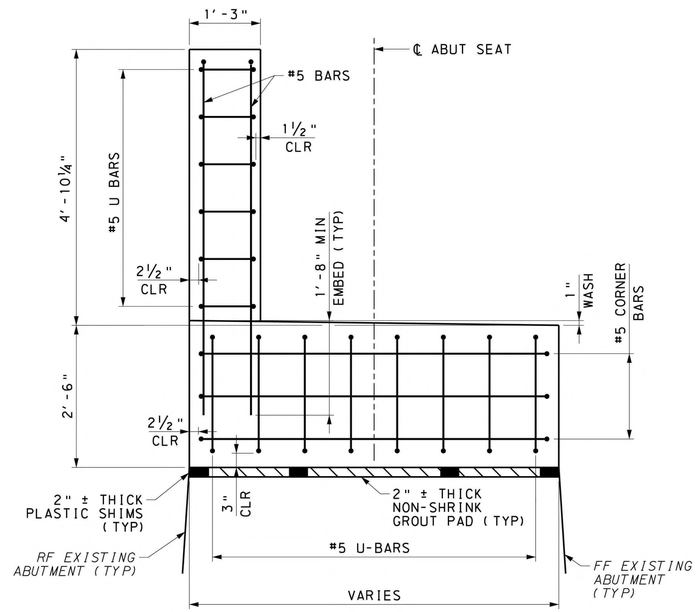

SECTION D-D

12 0 12 INCHES

NOTES:

1. FOR STAKE-OUT PLAN, SEE SHEET 6.
2. FOR ABUTMENT 1 PLAN & ELEVATION, SEE SHEET 9.
3. FOR ABUTMENT 1 APPROACH SLAB, SEE SHEET 11.
4. CLOSED TIE INDICATES A CONTINUOUS TIE WITH A 135 DEGREE BEND TO TERMINATE.
5. CONTRACTOR SHALL VERIFY THE INTEGRITY OF THE EXISTING MASONRY TO REMAIN BELOW THE ABUTMENT SEAT. MINIMUM EMBEDMENT IS BASED ON EMBEDMENT INTO COMPETENT MASONRY. IF LOOSE, CRACKED, MISSING, UNSOUND, OR RUBBLE MASONRY IS OBSERVED DURING THE DRILLING PROCESS, THE CONTRACTOR SHALL NOTIFY THE ENGINEER OF RECORD.

Mark	Description	By	Chk'd	Recm'd	Date
REVISIONS					

MPMS/ECMS PROJ: 115877

HNTB

COMMONWEALTH OF PENNSYLVANIA
REGISTERED PROFESSIONAL
ULYSSES C. KOUTSOGIANNIS
ENGINEER
PE073912

COMMONWEALTH OF PENNSYLVANIA
DEPARTMENT OF TRANSPORTATION

CLEARFIELD COUNTY
SR 1001 SECTION MTF
SEG 0132 OFFSET 0701
CR 65.60 (CRESSON BRANCH) STA 4+65.11
OVER SR 1001 (RIVER ROAD)
STEEL THROUGH PLATE GIRDER & STEEL THROUGH TRUSS BRIDGE

ABUTMENT 1 SECTION & DETAILS

PREPARED BY:
HNTB CORPORATION
4507 NORTH FRONT STREET
SUITE 300
HARRISBURG, PA 17110

RECOMMENDED _____

SHEET 10 OF 54

S-1001RJC

2/12/2024
FILENAME: 77861-#013-s-br-ab112.dgn

DES: TED	DES CKD: JAC	DWG: DAC	DWG CKD: JAC

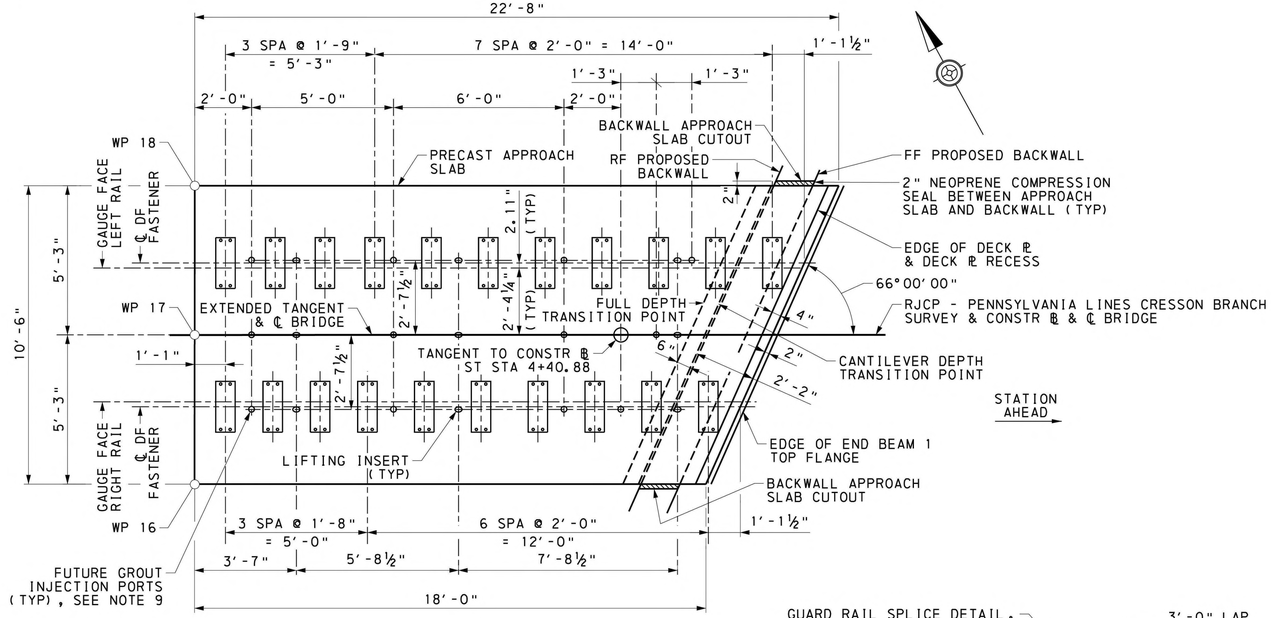

APPROACH SLAB-PLAN

1 0 1 2 3 FEET

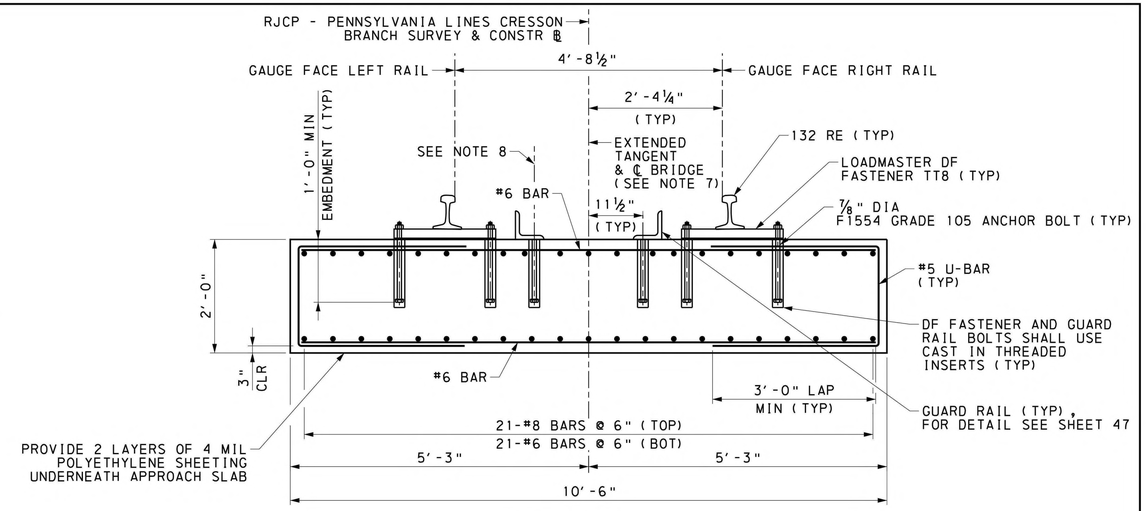

SECTION A-A

12 0 12 INCHES

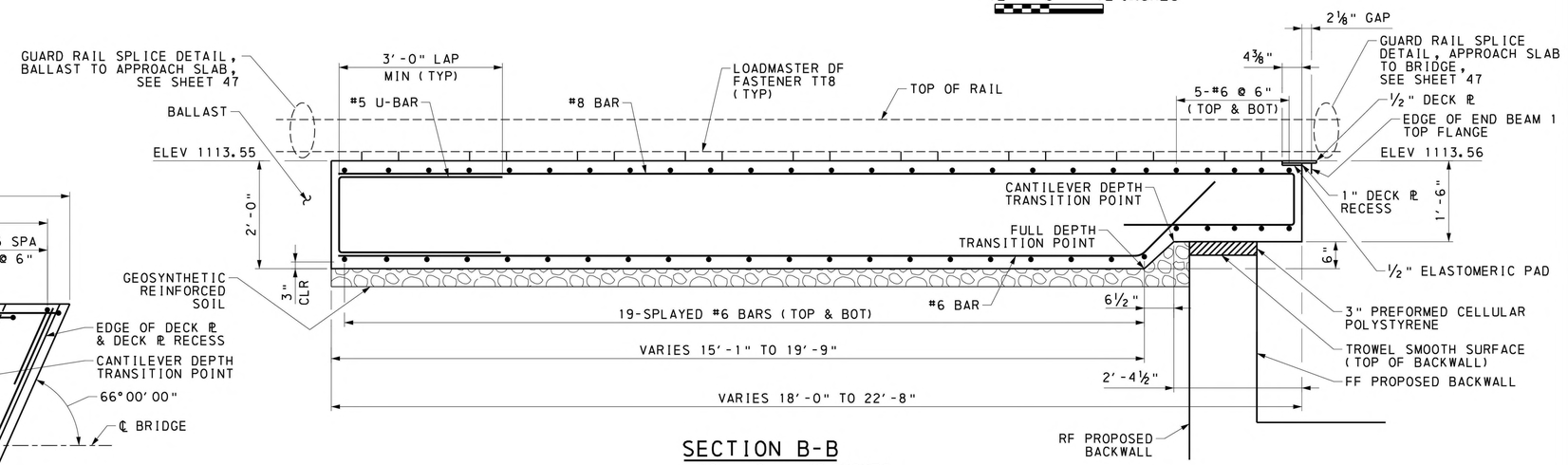

SECTION B-B

12 0 12 INCHES

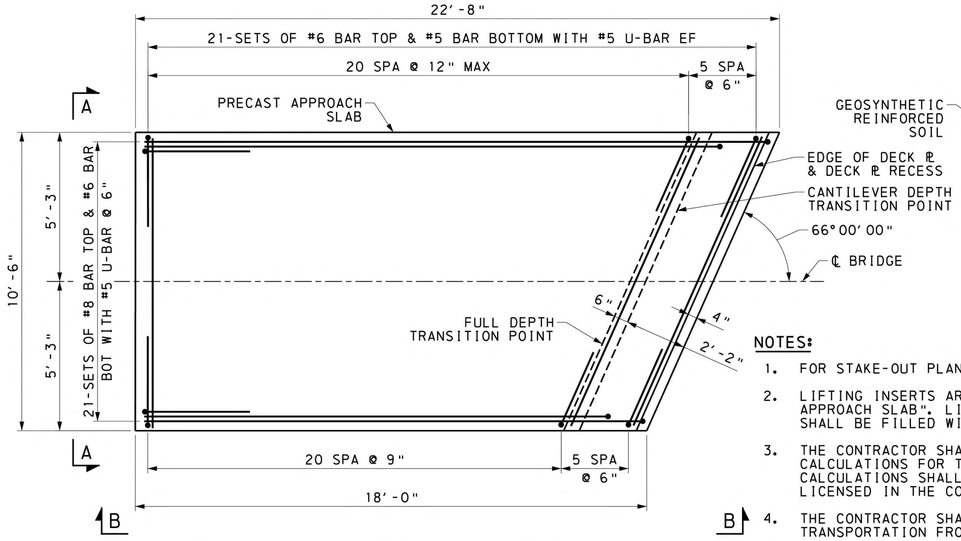

APPROACH SLAB-REINFORCEMENT PLAN

1 0 1 2 3 FEET

NOTES:

1. FOR STAKE-OUT PLAN, SEE SHEET 6.
2. LIFTING INSERTS ARE INCIDENTAL TO THE ITEM "PRECAST CONCRETE, APPROACH SLAB". LIFTING INSERTS PROVIDED BY THE CONTRACTOR SHALL BE FILLED WITH NON-SHRINK GROUT AFTER INSTALLATION.
3. THE CONTRACTOR SHALL SUBMIT SHOP DRAWINGS AND ANY SUPPLEMENTAL CALCULATIONS FOR THE PRECAST APPROACH SLAB. THE SHOP DRAWINGS AND CALCULATIONS SHALL BE SIGNED AND SEALED BY A PROFESSIONAL ENGINEER LICENSED IN THE COMMONWEALTH OF PENNSYLVANIA.
4. THE CONTRACTOR SHALL VERIFY THE ADEQUACY OF THE PRECAST SECTION FOR TRANSPORTATION FROM CASTING YARD TO SITE.
5. THE CONTRACTOR SHALL VERIFY THE ADEQUACY OF LIFTING INSERTS AND PROVIDE ANY SUPPLEMENTARY REINFORCEMENT WHEN NECESSARY.
6. FOR DIRECT FIXATION FASTENER BOLT PATTERN, SEE GIRDER & FRAMING DETAILS, SHEET 24.
7. AT WESTERN END OF APPROACH SLAB, THE CONSTR ℙ DEVIATES FROM THE ℄ BRIDGE & EXTENDED TANGENT BY APPROX 1/16". THEREFORE, WITH APPROVAL OF THE FASTENER MANUFACTURER, TRANSVERSELY SPACE THE DF FASTENERS ALONG THE ℄ BRIDGE & EXTENDED TANGENT FOR THE FULL LENGTH OF THE APPROACH SLAB.
8. FOR GUARD RAIL DETAILS, INCLUDING SPACING OF ANCHOR BOLTS, SEE SHEET 47.
9. FUTURE GROUT INJECTION PORTS SHALL BE 2" NOMINAL DIAMETER SCHEDULE 40 GALVANIZED PIPE. PORTS SHALL BE CAST INTO THE APPROACH SLAB AND PENETRATE THE FULL SLAB DEPTH. PORTS SHALL REMAIN UNGROUTED AT END OF CONSTRUCTION FOR USE DURING THE SERVICE LIFE OF THE STRUCTURE. PORTS SHALL BE CAPPED WITH REMOVABLE CAPS TO PREVENT WATER AND MATERIAL INTRUSION BEFORE THEIR POSSIBLE USE. FUTURE GROUT INJECTION PORTS ARE INCIDENTAL TO THE ITEM "PRECAST CONCRETE, APPROACH SLAB". SEE SHEET 7 FOR FUTURE GROUT INJECTION PORT DETAIL.

Mark	Description	By	Chk'd	Recm'd	Date

REVISIONS

MPMS/ECMS PROJ: 115877

HNTB

COMMONWEALTH OF PENNSYLVANIA
REGISTERED PROFESSIONAL
ULYSSES C. KOUTSOGIANNIS
ENGINEER
PE073912

PREPARED BY:
HNTB CORPORATION
4507 NORTH FRONT STREET
SUITE 300
HARRISBURG, PA 17110

COMMONWEALTH OF PENNSYLVANIA
DEPARTMENT OF TRANSPORTATION

CLEARFIELD COUNTY
SR 1001 SECTION MTF
SEG 0132 OFFSET 0701
CR 65.60 (CRESSON BRANCH) STA 4+65.11
OVER SR 1001 (RIVER ROAD)
STEEL THROUGH PLATE GIRDER & STEEL THROUGH TRUSS BRIDGE
ABUTMENT 1 APPROACH SLAB

RECOMMENDED _____

SHEET 11 OF 54

S-1001RJC

DES: MDB	DES CKD: JAC	DWG: DAC	DWG CKD: JAC

2/12/2024
FILENAME: 77861-M013-s-br-ab113.dgn

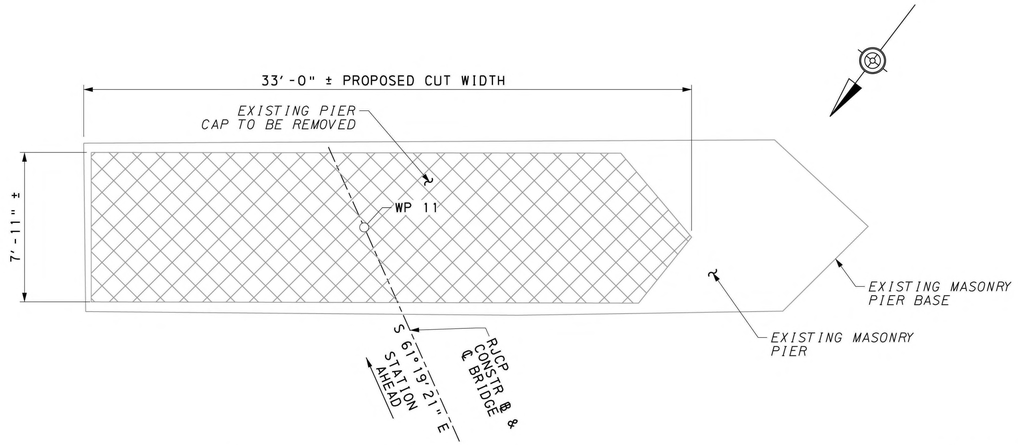

EXISTING PIER 1 - PLAN

2 0 2 4 FEET

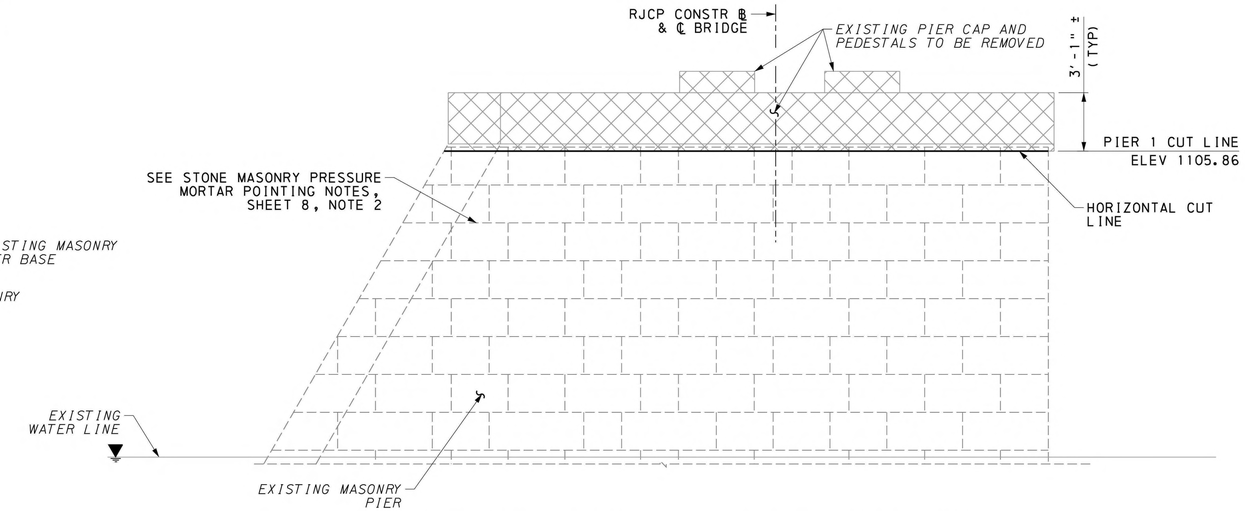

EXISTING PIER 1 - EAST FACE ELEVATION

2 0 2 4 FEET

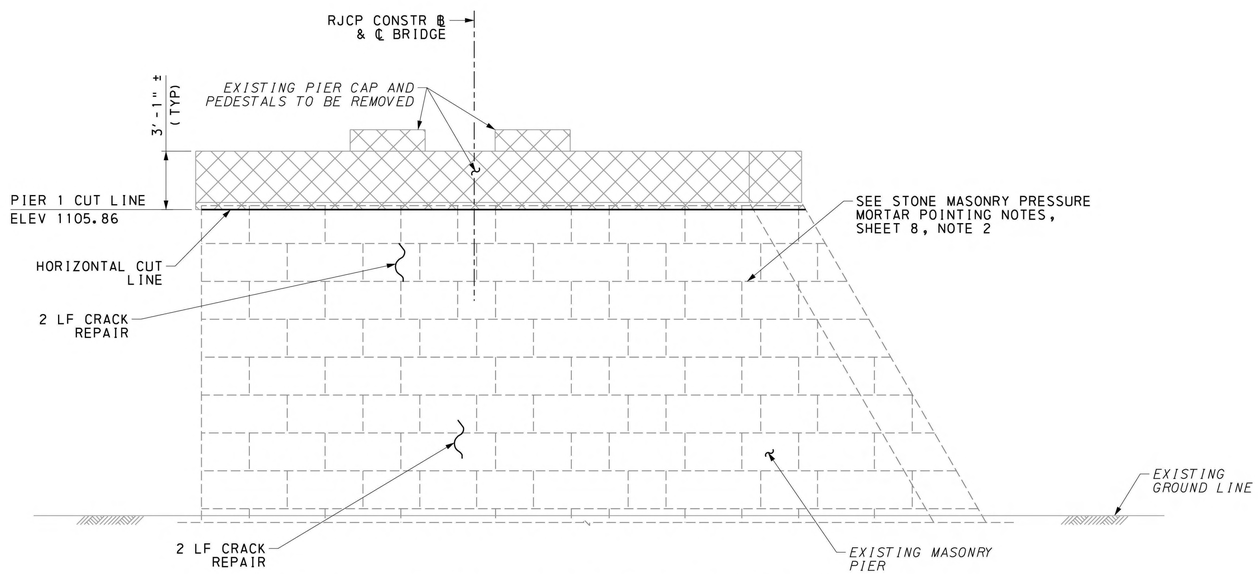

EXISTING PIER 1 - WEST FACE ELEVATION

2 0 2 4 FEET

LEGEND:

- REMOVE EXISTING CONCRETE
- EPOXY INJECTION CRACK SEAL

NOTES:

1. FOR STONE MASONRY PRESSURE MORTAR POINTING, CRACK REPAIR, AND REMOVAL NOTES, SEE SHEET 8.

Mark	Description	By	Chk'd	Recm'd	Date
REVISIONS					

MPMS/ECMS PROJ: 115877

HNTB

COMMONWEALTH OF PENNSYLVANIA
DEPARTMENT OF TRANSPORTATION

CLEARFIELD COUNTY
SR 1001 SECTION MTF
SEG 0132 OFFSET 0701
CR 65.60 (CRESSON BRANCH) STA 4+65.11
OVER SR 1001 (RIVER ROAD)
STEEL THROUGH PLATE GIRDER & STEEL THROUGH TRUSS BRIDGE

PIER 1 REPAIR & DEMO DETAILS

COMMONWEALTH OF PENNSYLVANIA
REGISTERED PROFESSIONAL
ULYSSES C. KOUTSOGIANNIS
ENGINEER
PE073912

PREPARED BY:
HNTB CORPORATION
4507 NORTH FRONT STREET
SUITE 300
HARRISBURG, PA 17110

RECOMMENDED _____

SHEET 12 OF 54

S-1001RJC

2/12/2024
FILENAME: 77861-W013-s-br-dam02.dgn

DES: JAC	DES CKD: UCK	DWG: DAC	DWG CKD: JAC

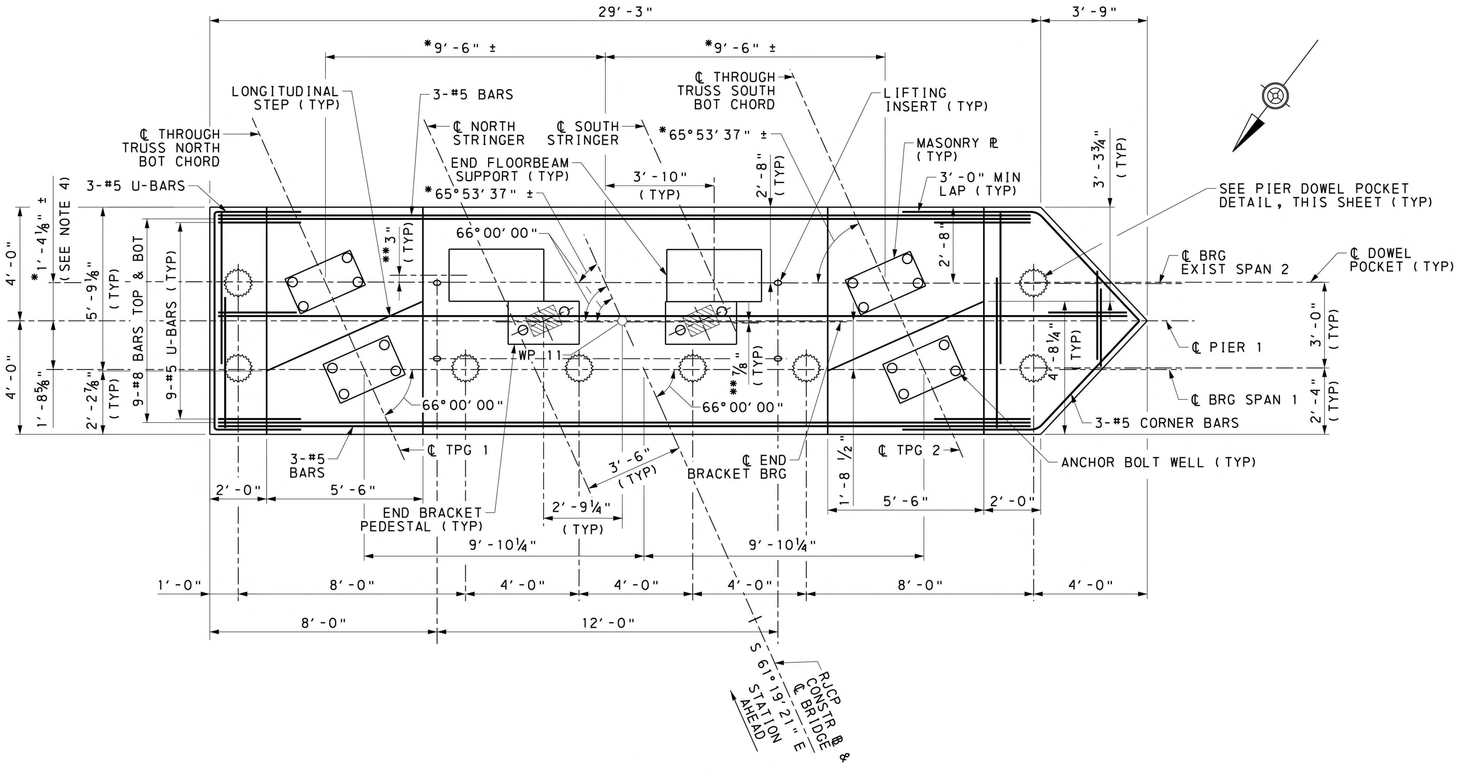

PIER 1 - PLAN OF CAP

1 0 1 2 3 FEET

*CONTRACTOR SHALL FIELD VERIFY DIMENSIONS/ANGLES ASSOCIATED WITH THE SPAN 2 EXISTING BEARINGS TO BE REPLACED AND SUPERSTRUCTURE TO REMAIN BEFORE FABRICATION OF THE PIER CAP, BEARINGS, AND SPAN 1 SUPERSTRUCTURE.

**TO CENTERLINE OF PEDESTAL/SUPPORT, MEASURED PERPENDICULAR TO RESPECTIVE CL BEARING.

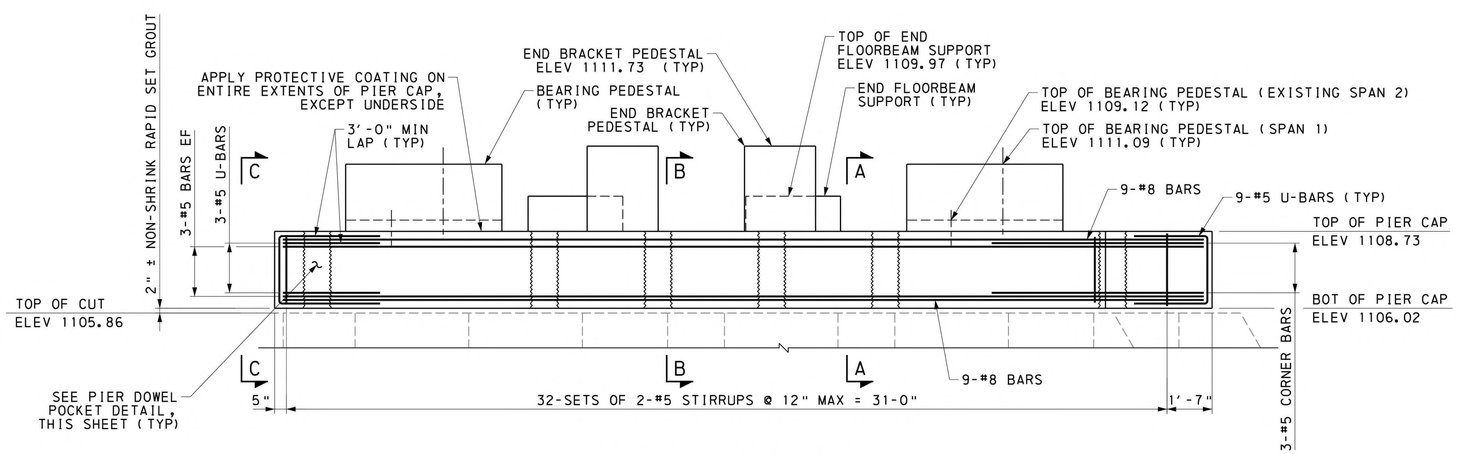

PIER 1 - ELEVATION

1 0 1 2 3 FEET

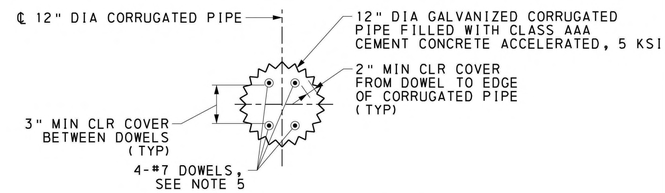

PIER DOWEL POCKET DETAIL

3 0 3 INCHES

NOTES:

1. FOR STAKE-OUT PLAN, SEE SHEET 6.
2. FOR PIER 1 SECTIONS & DETAILS, SEE SHEET 14.
3. EXISTING SPAN 2 END FLOORBEAM SHALL BE IN CONTACT WITH END FLOORBEAM SUPPORTS TO RESTORE STRUCTURAL SYSTEM TO EXISTING CONDITION.
4. OFFSET OF BEARING CENTERLINE TO PIER CENTERLINE TAKEN FROM INTERSECTION OF CONSTRUCTION BASELINE AND CL OF RESPECTIVE BEARING TO PIER CENTERLINE.
5. DOWELS SHALL BE GALVANIZED. DOWELS SHALL BE DRILLED AND INSTALLED AFTER THE PRECAST PIER CAP IS ERECTED ON TOP OF THE EXISTING PIER TO REMAIN.
6. CORRUGATED STEEL PIPE USED FOR THE DOWEL POCKET DETAIL SHALL BE GALVANIZED BASED ON PROJECT SPECIFICATIONS.
7. SEE SHEET 7 FOR SUBSTRUCTURE DETAILS.
8. NON-SHRINK GROUT BED SHALL BE ADJUSTED AS APPROVED BY THE ENGINEER TO MEET INSTALLED TOP OF PRECAST ELEVATIONS AS INDICATED ON THE PLANS.
9. LIFTING INSERTS AND 12" DIA CORRUGATED PIPE ARE INCIDENTAL TO THE ITEM "PRECAST CONCRETE, PIER CAP". LIFTING INSERTS PROVIDED BY THE CONTRACTOR SHALL BE FILLED WITH NON-SHRINK GROUT AFTER INSTALLATION.
10. THE CONTRACTOR SHALL SUBMIT SHOP DRAWINGS AND ANY SUPPLEMENTAL CALCULATIONS FOR THE PRECAST PIER CAP. THE SHOP DRAWINGS AND CALCULATIONS SHALL BE SIGNED AND SEALED BY A PROFESSIONAL ENGINEERING LICENSED IN THE COMMONWEALTH OF PENNSYLVANIA. BASED ON SITE CONSTRAINTS AND CRANE CAPACITIES, THE CONTRACTOR MAY ELECT TO ERECT THE PRECAST PIER CAP AS MULTIPLE SEGMENTS. IF MULTIPLE SEGMENTS ARE PROVIDED, TRANSVERSE CONTINUITY SHALL BE MADE WITH SHEAR KEY / COUPLER SYSTEMS.
11. THE CONTRACTOR SHALL VERIFY THE ADEQUACY OF THE PRECAST SECTION FOR TRANSPORTATION FROM CASTING YARD TO SITE.
12. THE CONTRACTOR SHALL VERIFY THE ADEQUACY OF LIFTING INSERTS AND PROVIDE ANY SUPPLEMENTARY REINFORCEMENT WHEN NECESSARY.

Mark	Description	By	Chk'd	Recm'd	Date
REVISIONS					

MPMS/ECMS PROJ: 115877

HNTB

COMMONWEALTH OF PENNSYLVANIA
DEPARTMENT OF TRANSPORTATION

COMMONWEALTH OF PENNSYLVANIA REGISTERED PROFESSIONAL ULYSSES C. KOUTSOGIANNIS ENGINEER PE073912

CLEARFIELD COUNTY
SR 1001 SECTION MTF
SEG 0132 OFFSET 0701
CR 65.60 (CRESSON BRANCH) STA 4+65.11
OVER SR 1001 (RIVER ROAD)
STEEL THROUGH PLATE GIRDER & STEEL THROUGH TRUSS BRIDGE
PIER 1 PLAN & ELEVATION

PREPARED BY:
HNTB CORPORATION
4507 NORTH FRONT STREET
SUITE 300
HARRISBURG, PA 17110

RECOMMENDED _____

SHEET 13 OF 54

S-1001RJC

DES: TED	DES CKD: JAC	DWG: DAC	DWG CKD: JAC

2/12/2024
FILENAME: 77861-W013-s-br-prsll.dgn

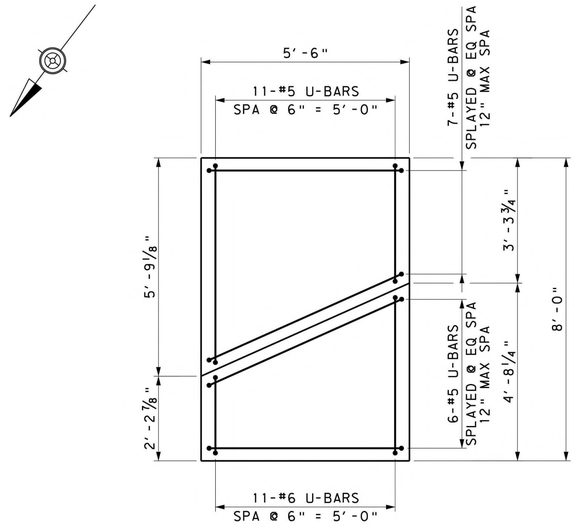

PIER 1 BEARING PEDESTAL PLAN

1 0 1 2 FEET

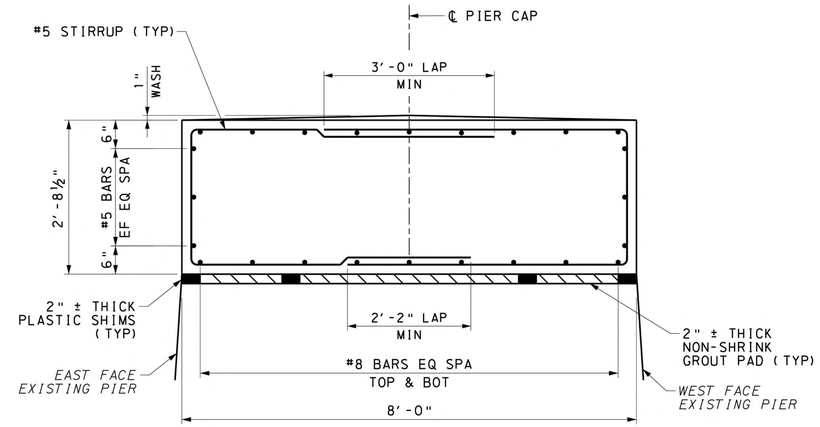

SECTION A-A

12 0 12 INCHES

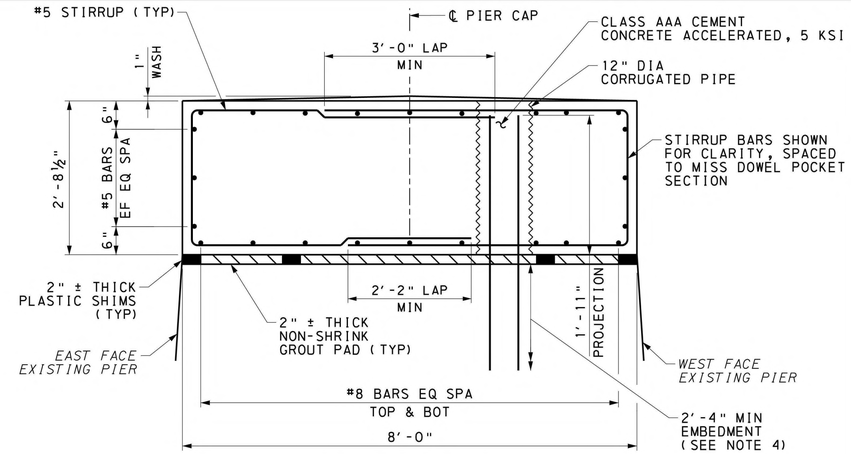

SECTION B-B

12 0 12 INCHES

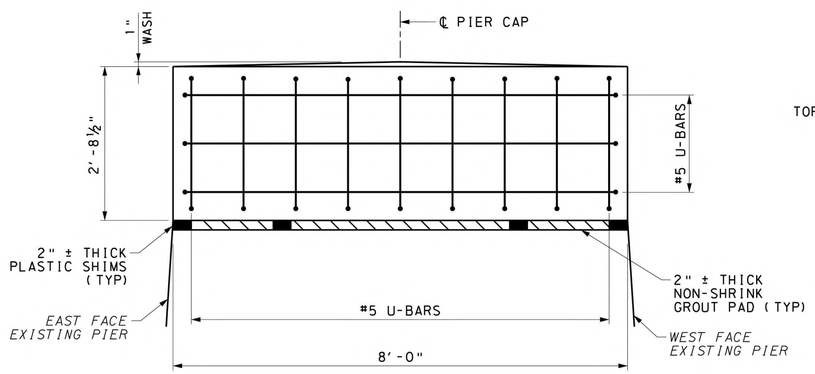

SECTION C-C

12 0 12 INCHES

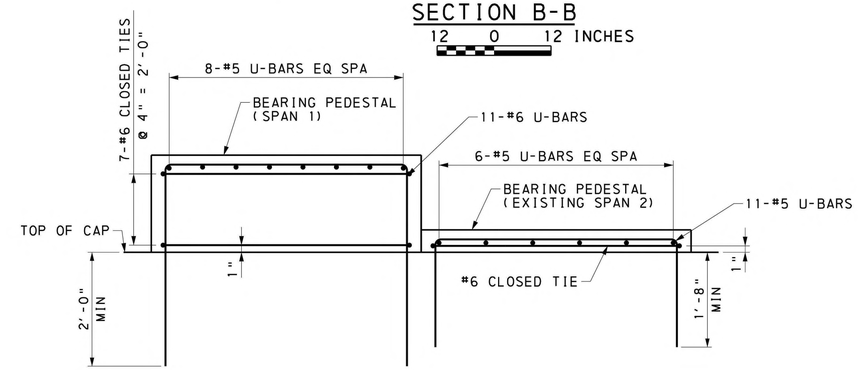

SECTION D-D

12 0 12 INCHES

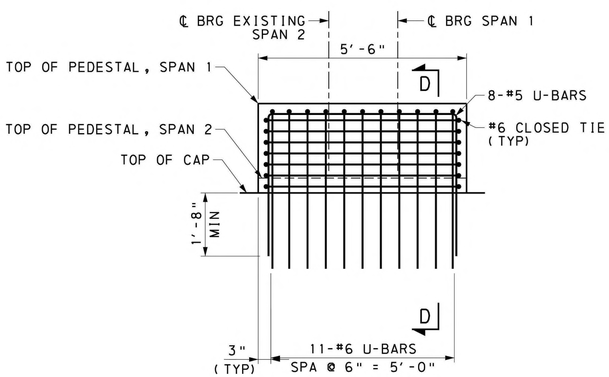

PIER 1 BEARING PEDESTAL ELEVATION

1 0 1 2 FEET

NOTES:

1. FOR STAKE-OUT PLAN, SEE SHEET 6.
2. FOR PIER 1 PLAN & ELEVATION, SEE SHEET 13.
3. CLOSED TIE INDICATES A CONTINUOUS TIE WITH A 135 DEGREE BEND TO TERMINATE.
4. CONTRACTOR SHALL VERIFY THE INTEGRITY OF THE EXISTING MASONRY TO REMAIN BELOW THE PIER CAP. MINIMUM EMBEDMENT IS BASED ON EMBEDMENT INTO COMPETENT MASONRY. IF LOOSE, CRACKED, MISSING, UNSOUND, OR RUBBLE MASONRY IS OBSERVED DURING THE DRILLING PROCESS, THE CONTRACTOR SHALL NOTIFY THE ENGINEER OF RECORD.

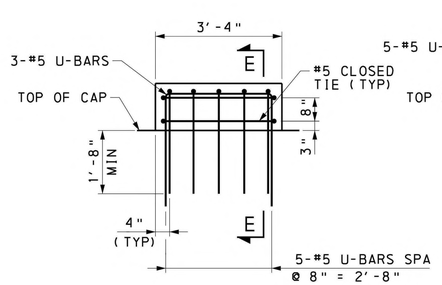

PIER 1-END FLOORBEAM SUPPORT

1 0 1 2 FEET

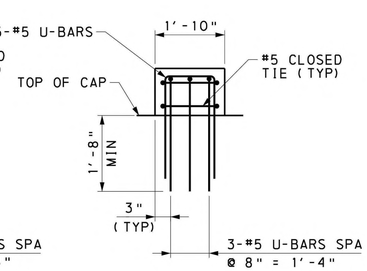

SECTION E-E

1 0 1 2 FEET

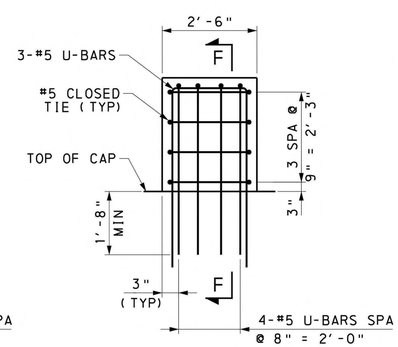

PIER 1-END BRACKET PEDESTAL

1 0 1 2 FEET

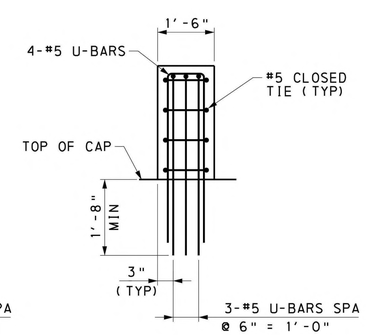

SECTION F-F

1 0 1 2 FEET

Mark	Description	By	Chk'd	Recm'd	Date
REVISIONS					

MPMS/ECMS PROJ: 115877

HNTB

COMMONWEALTH OF PENNSYLVANIA
REGISTERED PROFESSIONAL
ULYSSES C. KOUTSOGIANNIS
ENGINEER
PE073912

COMMONWEALTH OF PENNSYLVANIA
DEPARTMENT OF TRANSPORTATION

CLEARFIELD COUNTY
SR 1001 SECTION MTF
SEG 0132 OFFSET 0701
CR 65.60 (CRESSON BRANCH) STA 4+65.11
OVER SR 1001 (RIVER ROAD)
STEEL THROUGH PLATE GIRDER & STEEL
THROUGH TRUSS BRIDGE
PIER 1 SECTION & DETAILS

PREPARED BY:
HNTB CORPORATION
4507 NORTH FRONT STREET
SUITE 300
HARRISBURG, PA 17110

RECOMMENDED _____

SHEET 14 OF 54

S-1001RJC

2/12/2024
FILENAME: 77861-W013-S-BR-PRS12.dgn

DES: TED	DES CKD: JAC	DWG: DAC	DWG CKD: JAC

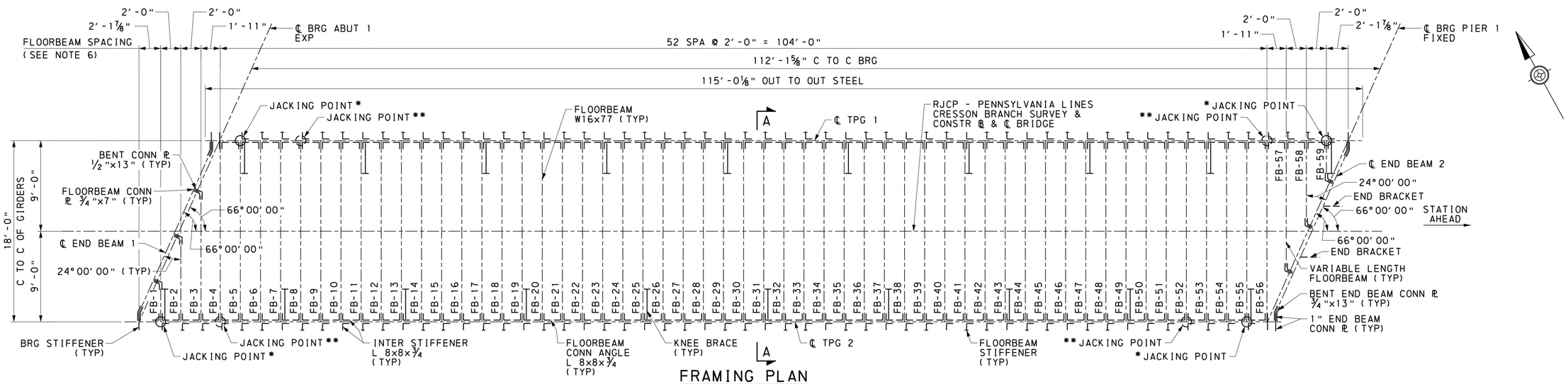

FRAMING PLAN

2 0 2 4 6 FEET

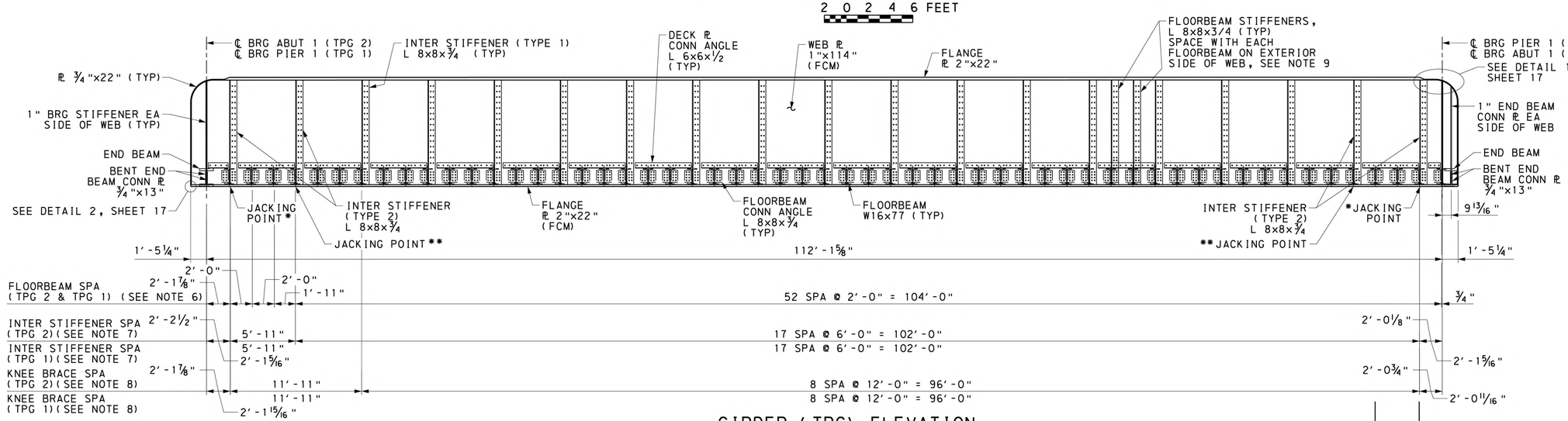

GIRDER (TPG) ELEVATION

2 0 2 4 6 FEET

Mark	Description	By	Chk'd	Recm'd	Date
REVISIONS					

MPMS/ECMS PROJ: 115877

NOTES:

1. FOR STAKE-OUT PLAN, SEE SHEET 6.
2. FOR GIRDER & FRAMING DETAILS, SEE SHEETS 16-31.
3. FOR DECK PLAN & DETAILS, SEE SHEETS 38-42.
4. GIRDER ELEVATION SHOWS TPG 2, EXTERIOR FACE. HIDDEN FLOORBEAMS, END BEAMS & CONNECTION PLATES/ANGLES ARE SHOWN FOR CLARITY. HIDDEN KNEEBRACES ARE NOT SHOWN FOR CLARITY. TPG 1 IS SIMILAR.
5. THROUGH PLATE GIRDERS SHALL BE FABRICATED IN ACCORDANCE WITH THE CAMBER DIAGRAM SHOWN ON SHEET 47.
6. FLOORBEAM SPACING MEASURED TO CENTERLINE OF FLOORBEAM. DIMENSIONS TAKEN FROM ℄ BRG STIFFENER TO ℄ OF BRG STIFFENER.
7. INTER STIFFENER SPACING MEASURED TO MID-THICKNESS OF OUTSTANDING LEG. NOTE FOR BOTH TPG 1 AND TPG 2 THAT THE INTER STIFFENER LEG AGAINST THE TPG WEB IS ORIENTED POINTING STATION AHEAD, SEE FRAMING PLAN. DIMENSIONS TAKEN FROM ℄ BRG STIFFENER TO ℄ OF BRG STIFFENER.
8. KNEE BRACE SPACING MEASURED TO CENTERLINE OF KNEE BRACE WEB. DIMENSIONS TAKEN FROM ℄ BRG STIFFENER TO ℄ OF BRG STIFFENER.
9. FLOORBEAM STIFFENERS ARE SPACED WITH EACH FLOORBEAM ON THE EXTERIOR SIDE OF THE WEB ONLY. TPG ELEVATION SHOWS ONLY TWO FLOORBEAM STIFFENERS FOR CLARITY. NOTE FOR BOTH TPG 1 AND TPG2 THAT THE FLOORBEAM STIFFENER LEG AGAINST THE TPG WEB IS ORIENTED POINTING STATION AHEAD, SEE FRAMING PLAN.

* VERTICAL JACKING POINT FOR BEARING REPLACEMENT.

** VERTICAL JACKING POINT FOR SPMT MOVE. THE CONTRACTOR SHALL VERIFY THE ADEQUACY OF THE PROPOSED BRIDGE STRUCTURE WHEN USING THE SPMT LIFTING POINTS AS SHOWN IN THE PLANS. REFER TO SPECIAL PROVISIONS FOR MORE DETAIL.

DES: JAC	DES CKD: MDB	DWG: JTM	DWG CKD: JAC

2/12/2024
FILENAME: 77861-W013-s-br-frp01.dgn

HNTB

COMMONWEALTH OF PENNSYLVANIA
REGISTERED PROFESSIONAL
ULYSSES C. KOUTSOGIANNIS
ENGINEER
PE073912

PREPARED BY:
HNTB CORPORATION
4507 NORTH FRONT STREET
SUITE 300
HARRISBURG, PA 17110

COMMONWEALTH OF PENNSYLVANIA
DEPARTMENT OF TRANSPORTATION

CLEARFIELD COUNTY
SR 1001 SECTION MTF
SEG 0132 OFFSET 0701
CR 65.60 (CRESSON BRANCH) STA 4+65.11
OVER SR 1001 (RIVER ROAD)
STEEL THROUGH PLATE GIRDER & STEEL THROUGH TRUSS BRIDGE

FRAMING PLAN & GIRDER ELEVATION

RECOMMENDED _____

SHEET 15 OF 54

S-1001RJC

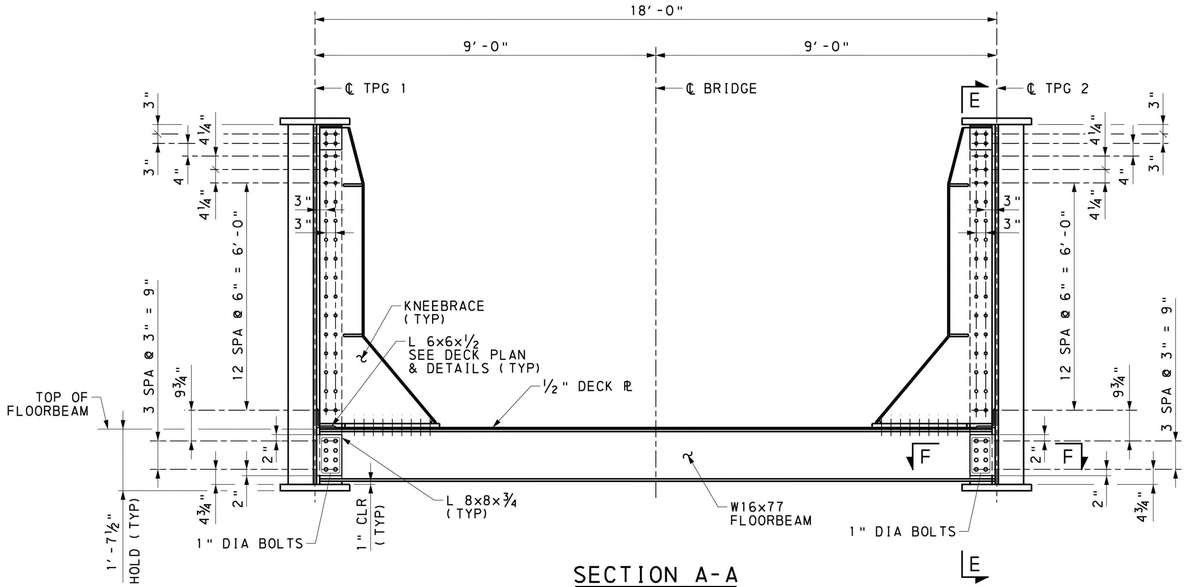

SECTION A-A
1 0 1 2 FEET

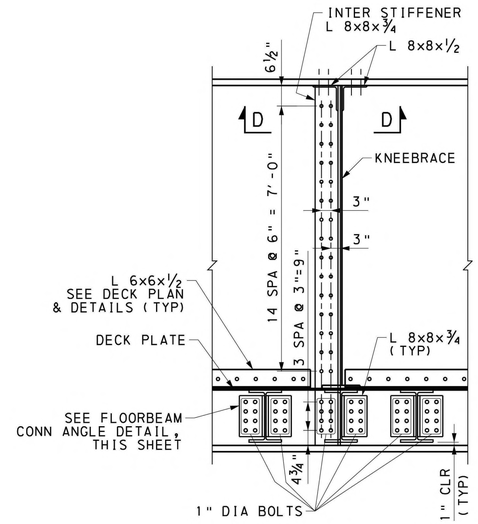

SECTION E-E
1 0 1 2 FEET

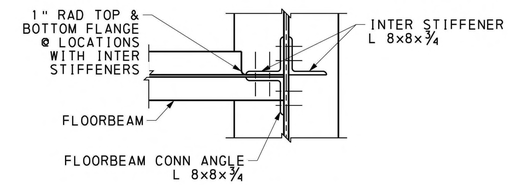

SECTION F-F
12 0 12 INCHES

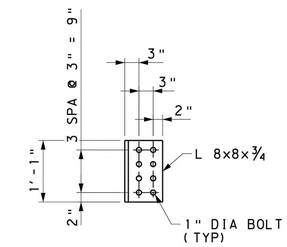

FLOORBEAM CONN ANGLE DETAIL
12 0 12 INCHES

(BOTH LEGS OF ANGLE DETAILED AS SHOWN ABOVE)

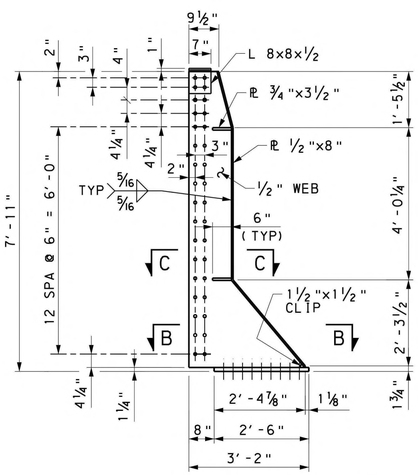

KNEEBRACE DETAIL
1 0 1 2 FEET

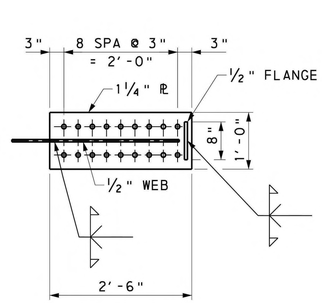

SECTION B-B
12 0 12 INCHES

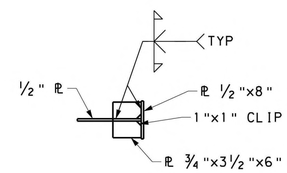

SECTION C-C
12 0 12 INCHES

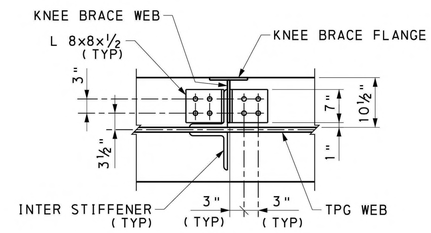

SECTION D-D
12 0 12 INCHES

NOTES:

1. FOR STAKE-OUT PLAN, SEE SHEET 6.
2. FOR FRAMING PLAN & GIRDER ELEVATION, SEE SHEET 15.
3. FOR GIRDER & FRAMING DETAILS, SEE SHEETS 17-31.
4. FOR DECK PLAN & DETAILS, SEE SHEETS 38-42.

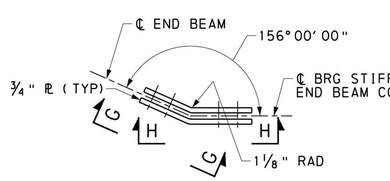

BENT END BEAM CONN PLATE DETAIL
6 0 6 12 INCHES

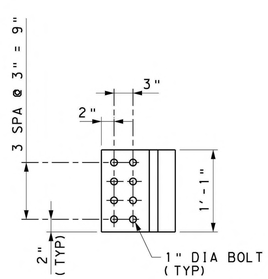

SECTION G-G
6 0 6 12 INCHES

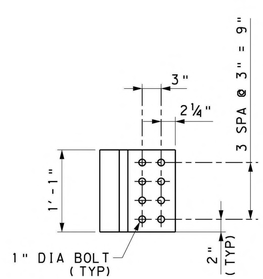

SECTION H-H
6 0 6 12 INCHES

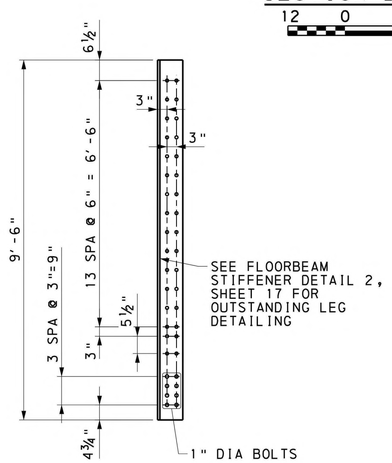

FLOORBEAM STIFFENER DETAIL 1
1 0 1 2 FEET

Mark	Description	By	Chk'd	Recm'd	Date
REVISIONS					

MPMS/ECMS PROJ: 115877

HNTB

PREPARED BY:
HNTB CORPORATION
4507 NORTH FRONT STREET
SUITE 300
HARRISBURG, PA 17110

COMMONWEALTH OF PENNSYLVANIA
REGISTERED PROFESSIONAL
ULYSSES C. KOUTSOGIANNIS
ENGINEER
PE073912

COMMONWEALTH OF PENNSYLVANIA
DEPARTMENT OF TRANSPORTATION

CLEARFIELD COUNTY
SR 1001 SECTION MTF
SEG 0132 OFFSET 0701
CR 65.60 (CRESSON BRANCH) STA 4+65.11
OVER SR 1001 (RIVER ROAD)
STEEL THROUGH PLATE GIRDER & STEEL THROUGH TRUSS BRIDGE
GIRDER & FRAMING DETAILS 1 OF 16

RECOMMENDED _____

SHEET 16 OF 54

S-1001RJC

2/12/2024
FILENAME: 77861-W013-s-br-frd01.dgn

DES: JAC	DES CKD: MDB	DWG: DAC	DWG CKD: JAC

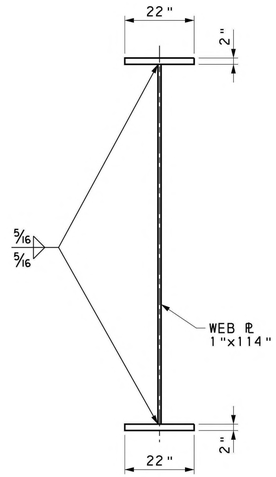

TYPICAL THROUGH GIRDER SECTION

1 0 1 2 FEET

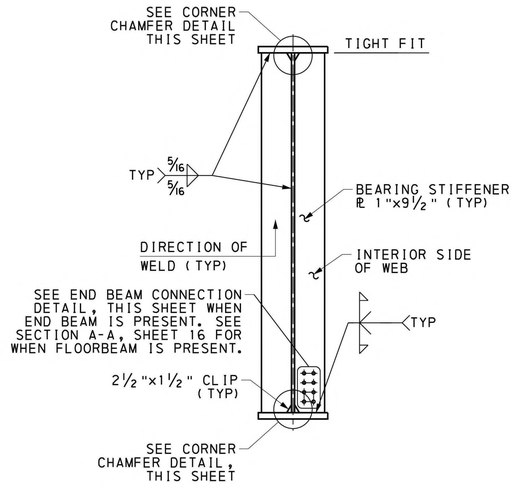

BEARING STIFFENER

1 0 1 2 FEET

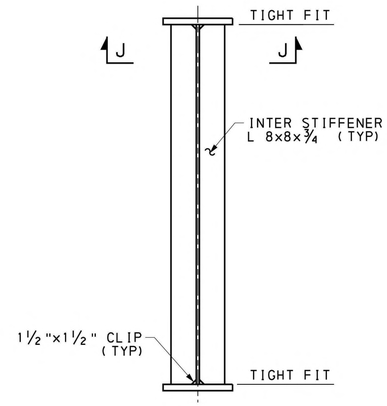

INTERMEDIATE STIFFENER TYPE 1

(HOLES FOR FLOORBEAM AND/OR KNEEBRACE CONNECTIONS NOT SHOWN FOR CLARITY, SEE GIRDER AND FRAMING DETAILS, SECTIONS A-A & E-E)

1 0 1 2 FEET

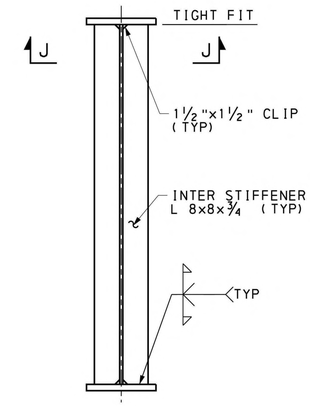

INTERMEDIATE STIFFENER TYPE 2

(HOLES FOR FLOORBEAM AND/OR KNEEBRACE CONNECTIONS NOT SHOWN FOR CLARITY, SEE GIRDER AND FRAMING DETAILS, SECTIONS A-A & E-E)

1 0 1 2 FEET

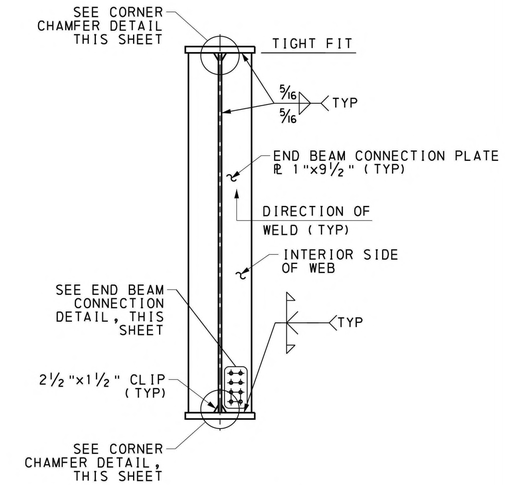

END BEAM CONNECTION PLATE

1 0 1 2 FEET

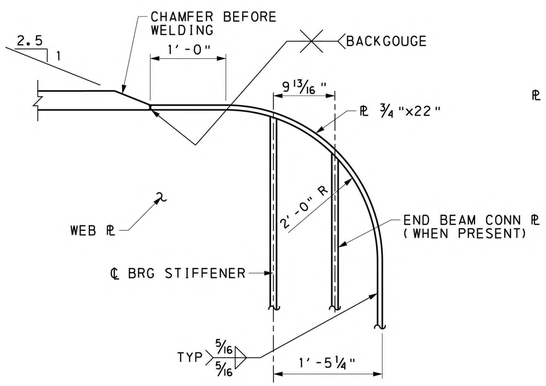

DETAIL 1

6 0 6 12 INCHES

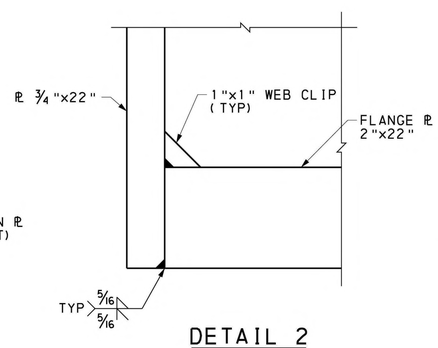

DETAIL 2

NOT TO SCALE

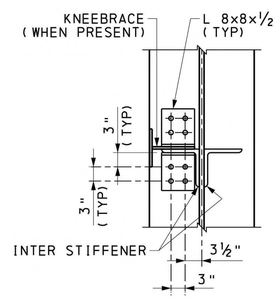

SECTION J-J

(CONNECTION L'S TYPICAL AT ALL TRACK SIDE INTERMEDIATE STIFFENER LOCATIONS)

12 0 12 INCHES

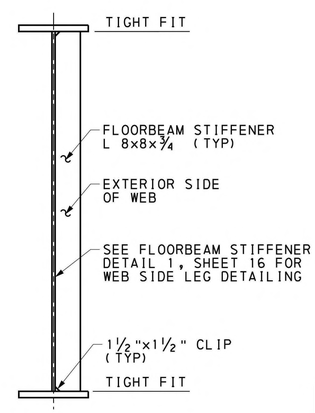

FLOORBEAM STIFFENER DETAIL 2

1 0 1 2 FEET

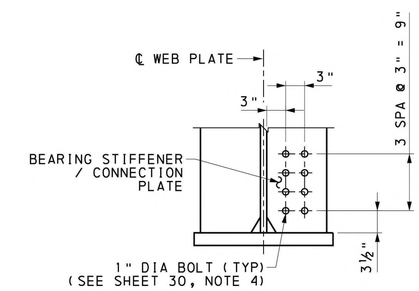

END BEAM CONNECTION DETAIL

6 0 6 12 INCHES

Mark	Description	By	Chk'd	Recm'd	Date

REVISIONS

MPMS/ECMS PROJ: 115877

NOTES:

1. FOR STAKE-OUT PLAN, SEE SHEET 6.
2. FOR FRAMING PLAN & GIRDER ELEVATION, SEE SHEET 15.
3. FOR GIRDER & FRAMING DETAILS, SEE SHEETS 16 & 18-31.
4. FOR DECK PLAN & DETAILS, SEE SHEETS 38-42.

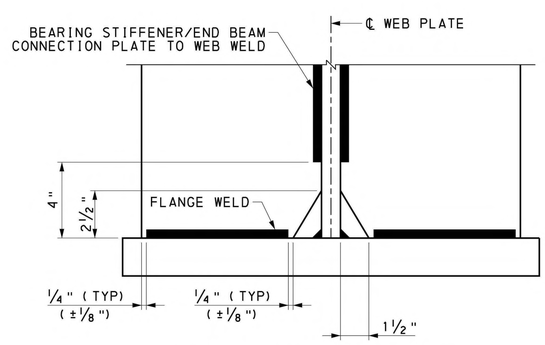

CORNER CHAMFER DETAIL

NOT TO SCALE

HNTB

COMMONWEALTH OF PENNSYLVANIA REGISTERED PROFESSIONAL ULYSSES C. KOUTSOGIANNIS ENGINEER PE073912

PREPARED BY:
HNTB CORPORATION
4507 NORTH FRONT STREET
SUITE 300
HARRISBURG, PA 17110

COMMONWEALTH OF PENNSYLVANIA
DEPARTMENT OF TRANSPORTATION

CLEARFIELD COUNTY
SR 1001 SECTION MTF
SEG 0132 OFFSET 0701
CR 65.60 (CRESSON BRANCH) STA 4+65.11
OVER SR 1001 (RIVER ROAD)
STEEL THROUGH PLATE GIRDER & STEEL THROUGH TRUSS BRIDGE
GIRDER & FRAMING DETAILS 2 OF 16

RECOMMENDED _____

SHEET 17 OF 54

S-1001RJC

2/12/2024
FILENAME: 77861-M013-s-br-frd02.dgn

DES: JAC	DES CKD: MDB	DWG: DAC	DWG CKD: JAC

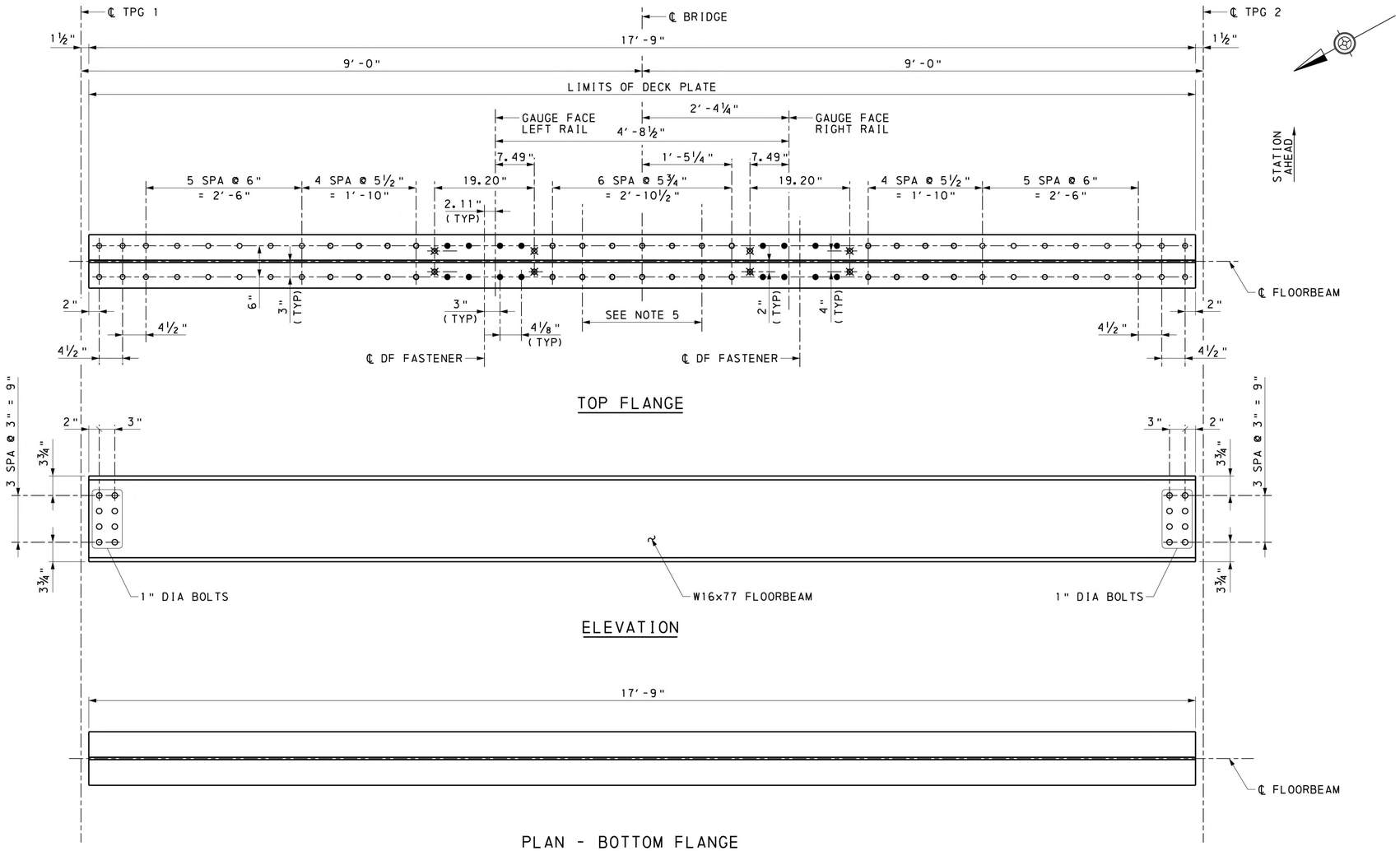

TYPE 1 FLOORBEAM DETAIL

6 0 6 12 INCHES

FULL LENGTH FLOORBEAM TABLE		
APPLICABLE FLOORBEAM NAME	FLOORBEAM TYPE	DESCRIPTION
FB-6, FB-9, FB-12, FB-15, FB-18, FB-21, FB-24, FB-27, FB-30, FB-33, FB-36, FB-39, FB-42, FB-45, FB-48, FB-51, FB-54	TYPE 1	REGULAR FLOORBEAM
FB-8, FB-14, FB-20, FB-26, FB-32, FB-38, FB-44, FB-50	TYPE 2A	LEFT SIDE INTERMEDIATE STIFFENER & COPED
FB-5, FB-11, FB-17, FB-23, FB-29, FB-35, FB-41, FB-47, FB-53	TYPE 2B	LEFT SIDE INTERMEDIATE STIFFENER, KNEE BRACE & COPED
FB-10, FB-16, FB-22, FB-28, FB-34, FB-40, FB-46, FB-52	TYPE 3A	RIGHT SIDE INTERMEDIATE STIFFENER & COPED
FB-7, FB-13, FB-19, FB-25, FB-31, FB-37, FB-43, FB-49, FB-55	TYPE 3B	RIGHT SIDE INTERMEDIATE STIFFENER, KNEE BRACE & COPED
FB-4	FB-4	FB-4
FB-56	FB-56	FB-56

NOTES:

1. FOR STAKE-OUT PLAN, SEE SHEET 6.
2. FOR FRAMING PLAN & GIRDER ELEVATION, SEE SHEET 15.
3. FOR GIRDER & FRAMING DETAILS, SEE SHEETS 16-17 & 19-31.
4. FOR DECK PLAN & DETAILS, SEE SHEETS 38-42.
5. BOLTS SHALL BE USED TO FASTEN GUARD RAIL TO STRUCTURE. FOR GUARD RAIL DETAILS, SEE SHEET 47.

LEGEND:

ALL BOLTS A325 UNLESS NOTED OTHERWISE

- o HEX HEAD BOLT
- ● COUNTERSUNK BOLT
- ⊠ DIRECT FIXATION FASTENER BOLT

Mark	Description	By	Chk'd	Recm'd	Date
REVISIONS					

MPMS/ECMS PROJ: 115877

HNTB

COMMONWEALTH OF PENNSYLVANIA
DEPARTMENT OF TRANSPORTATION

COMMONWEALTH OF PENNSYLVANIA REGISTERED PROFESSIONAL ULYSSES C. KOUTSOGIANNIS ENGINEER PE073912

CLEARFIELD COUNTY
SR 1001 SECTION MTF
SEG 0132 OFFSET 0701
CR 65.60 (CRESSON BRANCH) STA 4+65.11
OVER SR 1001 (RIVER ROAD)
STEEL THROUGH PLATE GIRDER & STEEL THROUGH TRUSS BRIDGE
GIRDER & FRAMING DETAILS 3 OF 16

PREPARED BY:
HNTB CORPORATION
4507 NORTH FRONT STREET
SUITE 300
HARRISBURG, PA 17110

RECOMMENDED _____

SHEET 18 OF 54

S-1001RJC

2/12/2024
FILENAME: 77861-M013-s-br-frd03.dgn

DES: JAC	DES CKD: MDB	DWG: DAC	DWG CKD: JAC

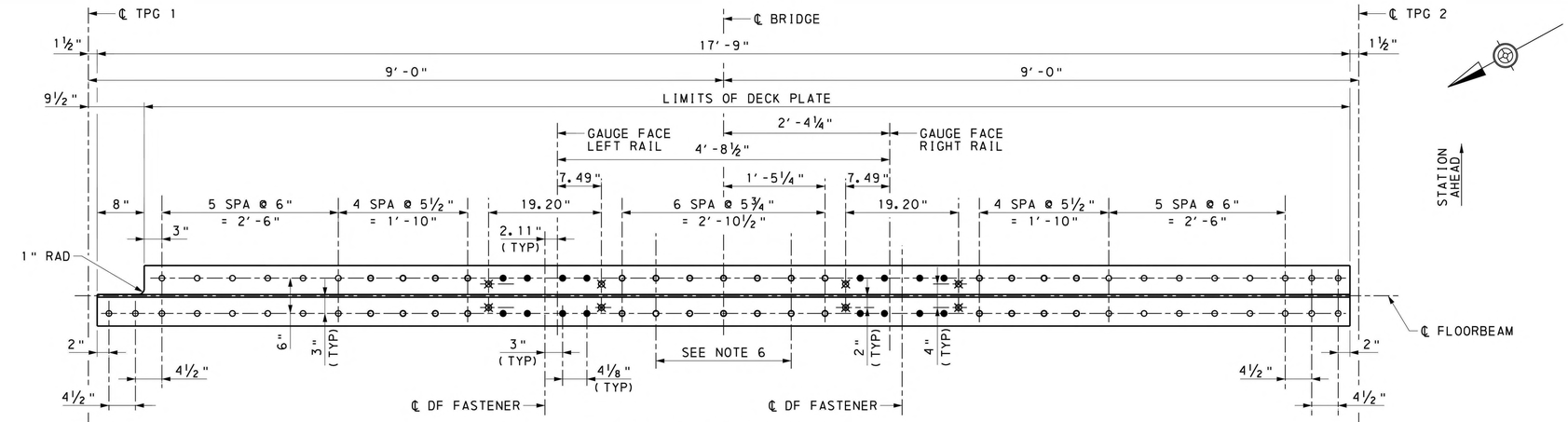

TYPE 2A - TOP FLANGE

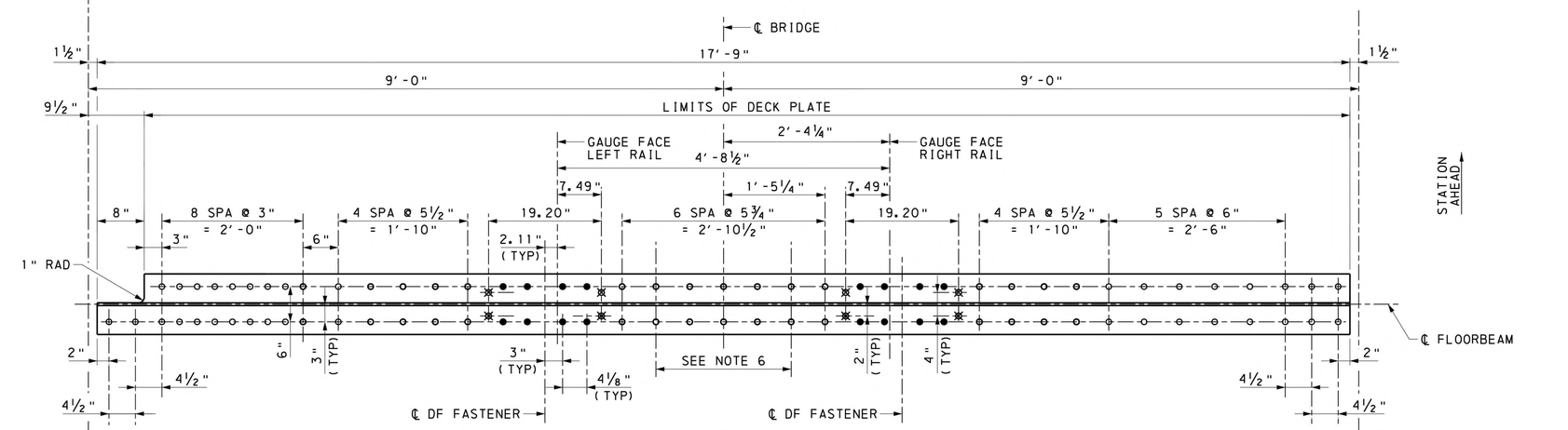

TYPE 2B - TOP FLANGE

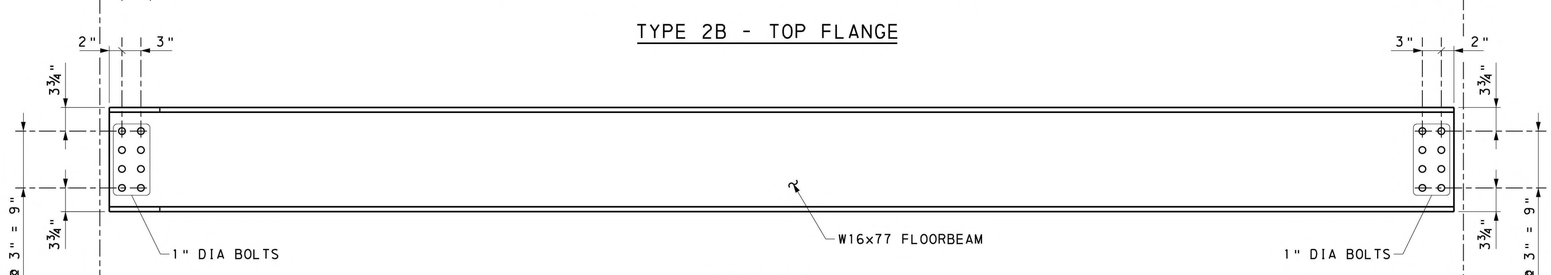

ELEVATION

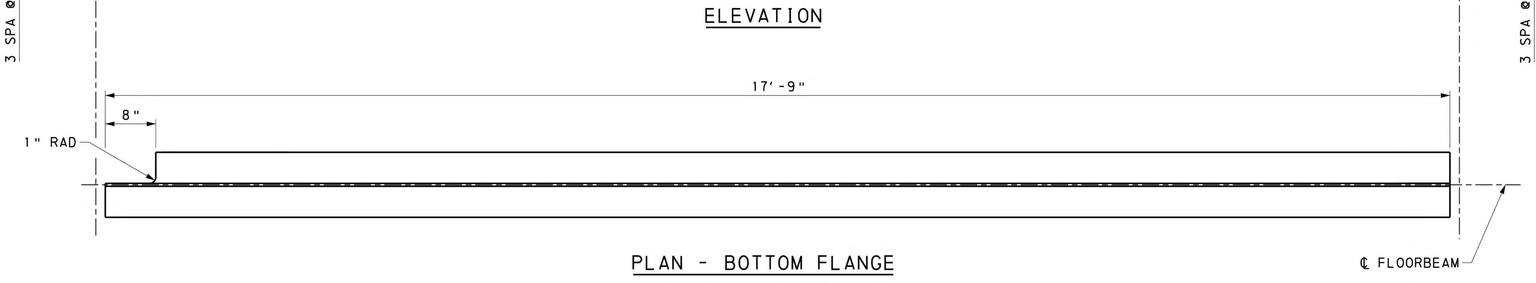

PLAN - BOTTOM FLANGE

TYPE 2 FLOORBEAM DETAIL

6 0 6 12 INCHES

NOTES:

1. FOR FULL LENGTH FLOORBEAM TABLE, SEE SHEET 18.
2. FOR STAKE-OUT PLAN, SEE SHEET 6.
3. FOR FRAMING PLAN & GIRDER ELEVATION, SEE SHEET 15.
4. FOR GIRDER & FRAMING DETAILS, SEE SHEETS 16-18 & 20-31.
5. FOR DECK PLAN & DETAILS, SEE SHEETS 38-42.
6. BOLTS SHALL BE USED TO FASTEN GUARD RAIL TO STRUCTURE. FOR GUARD RAIL DETAILS, SEE SHEET 47.

LEGEND:

ALL BOLTS A325 UNLESS NOTED OTHERWISE

- o HEX HEAD BOLT
- ● COUNTERSUNK BOLT
- ⊠ DIRECT FIXATION FASTENER BOLT

Mark	Description	By	Chk'd	Recm'd	Date
REVISIONS					

MPMS/ECMS PROJ: 115877

HNTB

COMMONWEALTH OF PENNSYLVANIA
DEPARTMENT OF TRANSPORTATION

COMMONWEALTH OF PENNSYLVANIA REGISTERED PROFESSIONAL ULYSSES C. KOUTSOGIANNIS ENGINEER PE073912

CLEARFIELD COUNTY
SR 1001 SECTION MTF
SEG 0132 OFFSET 0701
CR 65.60 (CRESSON BRANCH) STA 4+65.11
OVER SR 1001 (RIVER ROAD)
STEEL THROUGH PLATE GIRDER & STEEL THROUGH TRUSS BRIDGE
GIRDER & FRAMING DETAILS 4 OF 16

PREPARED BY:
HNTB CORPORATION
4507 NORTH FRONT STREET
SUITE 300
HARRISBURG, PA 17110

RECOMMENDED _____

SHEET 19 OF 54

S-1001RJC

DES: JAC	DES CKD: MDB	DWG: DAC	DWG CKD: JAC

2/12/2024
FILENAME: 77861-W013-s-br-frd04.dgn

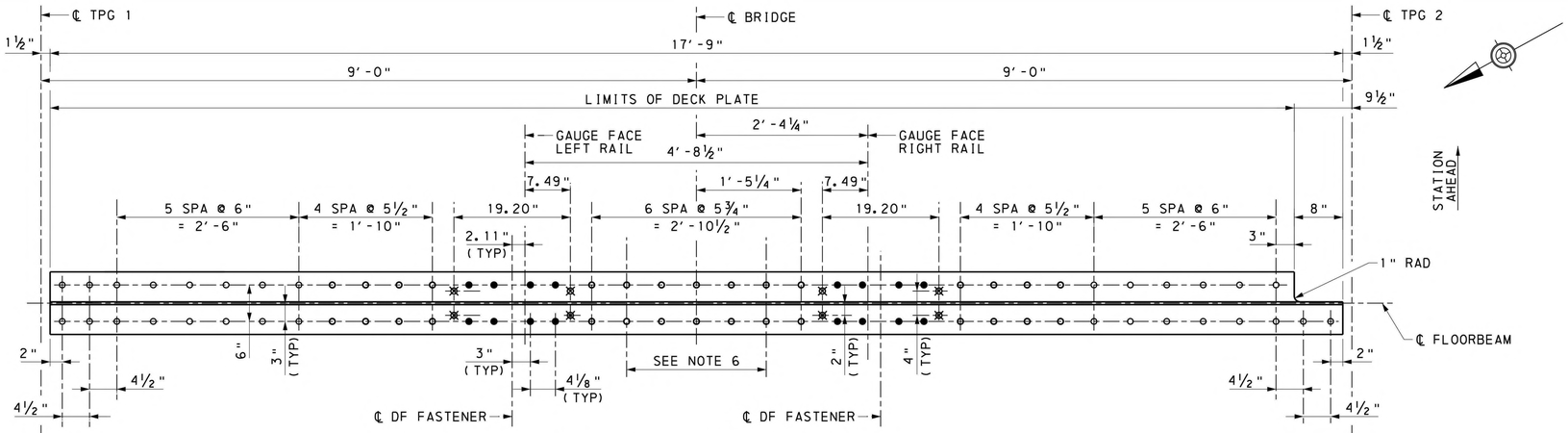

TYPE 3A - TOP FLANGE

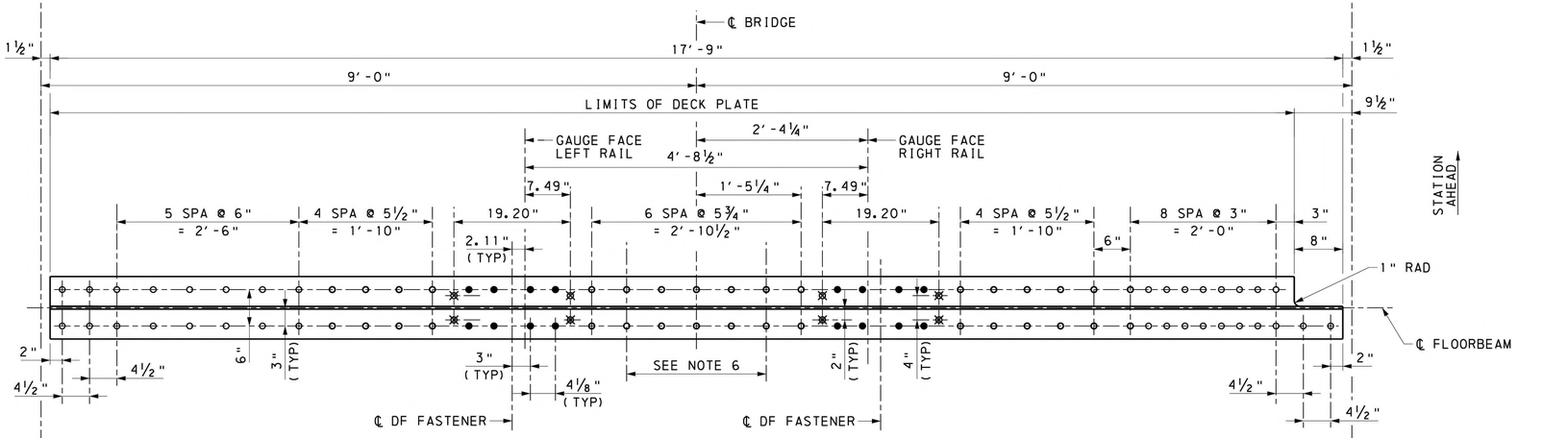

TYPE 3B - TOP FLANGE

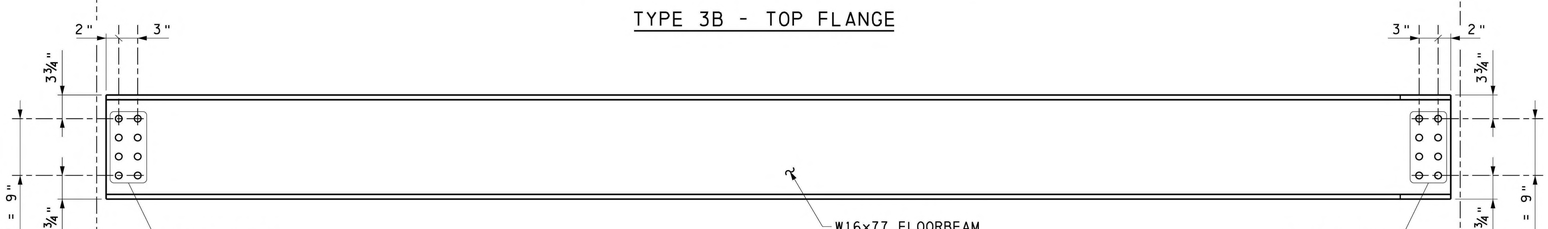

ELEVATION

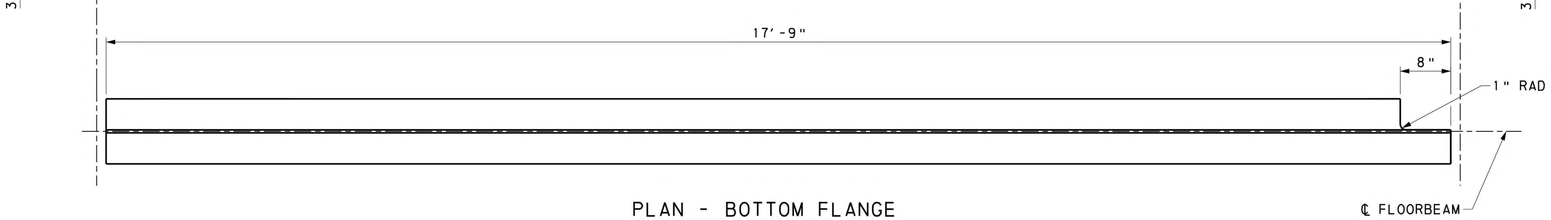

PLAN - BOTTOM FLANGE

TYPE 3 FLOORBEAM DETAIL

6 0 6 12 INCHES

NOTES:

1. FOR FULL LENGTH FLOORBEAM TABLE, SEE SHEET 18.
2. FOR STAKE-OUT PLAN, SEE SHEET 6.
3. FOR FRAMING PLAN & GIRDER ELEVATION, SEE SHEET 15.
4. FOR GIRDER & FRAMING DETAILS, SEE SHEETS 16-19 & 21-31.
5. FOR DECK PLAN & DETAILS, SEE SHEETS 38-42.
6. BOLTS SHALL BE USED TO FASTEN GUARD RAIL TO STRUCTURE. FOR GUARD RAIL DETAILS, SEE SHEET 47.

LEGEND:

ALL BOLTS A325 UNLESS NOTED OTHERWISE

- ○ HEX HEAD BOLT
- ● COUNTERSUNK BOLT
- ⊠ DIRECT FIXATION FASTENER BOLT

Mark	Description	By	Chk'd	Recm'd	Date
REVISIONS					

MPMS/ECMS PROJ: 115877

HNTB

COMMONWEALTH OF PENNSYLVANIA
REGISTERED PROFESSIONAL
ULYSSES C. KOUTSOGIANNIS
ENGINEER
PE073912

PREPARED BY:
HNTB CORPORATION
4507 NORTH FRONT STREET
SUITE 300
HARRISBURG, PA 17110

COMMONWEALTH OF PENNSYLVANIA
DEPARTMENT OF TRANSPORTATION

CLEARFIELD COUNTY
SR 1001 SECTION MTF
SEG 0132 OFFSET 0701
CR 65.60 (CRESSON BRANCH) STA 4+65.11
OVER SR 1001 (RIVER ROAD)
STEEL THROUGH PLATE GIRDER & STEEL THROUGH TRUSS BRIDGE

GIRDER & FRAMING DETAILS 5 OF 16

RECOMMENDED _____

SHEET 20 OF 54

S-1001RJC

DES: JAC | DES CKD: MDB | DWG: DAC | DWG CKD: JAC

2/12/2024
FILENAME: 77861-M013-s-br-fr005.dgn

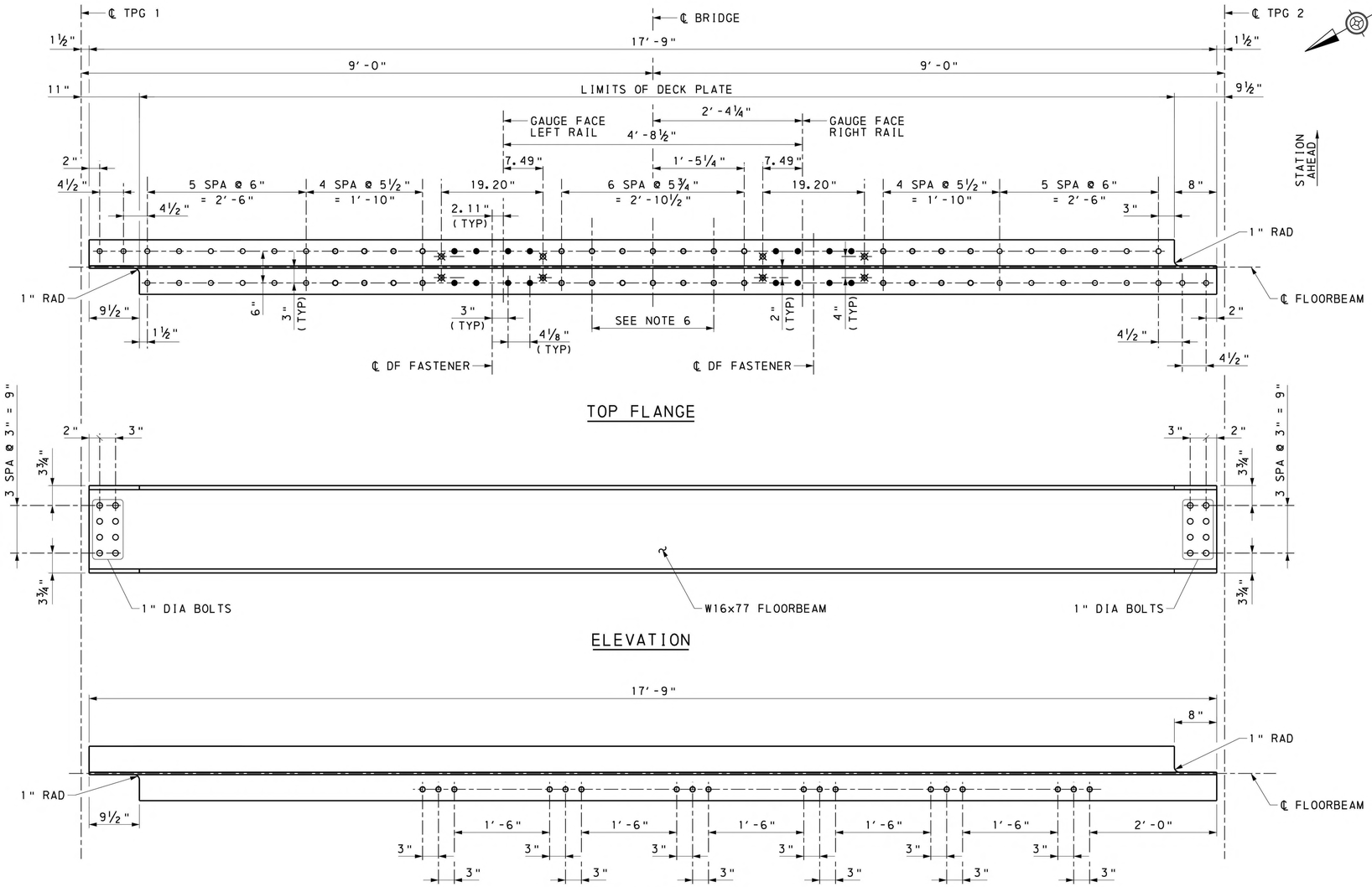

FB-4 FLOORBEAM DETAIL

6 0 6 12 INCHES

NOTES:

1. FOR FULL LENGTH FLOORBEAM TABLE, SEE SHEET 18.
2. FOR STAKE-OUT PLAN, SEE SHEET 6.
3. FOR FRAMING PLAN & GIRDER ELEVATION, SEE SHEET 15.
4. FOR GIRDER & FRAMING DETAILS, SEE SHEETS 16-20 & 22-31.
5. FOR DECK PLAN & DETAILS, SEE SHEETS 38-42.
6. BOLTS SHALL BE USED TO FASTEN GUARD RAIL TO STRUCTURE. FOR GUARD RAIL DETAILS, SEE SHEET 47.

LEGEND:

ALL BOLTS A325 UNLESS NOTED OTHERWISE

- o HEX HEAD BOLT
- ● COUNTERSUNK BOLT
- ⊠ DIRECT FIXATION FASTENER BOLT

Mark	Description	By	Chk'd	Recm'd	Date
REVISIONS					

MPMS/ECMS PROJ: 115877

HNTB

COMMONWEALTH OF PENNSYLVANIA
DEPARTMENT OF TRANSPORTATION

COMMONWEALTH OF PENNSYLVANIA REGISTERED PROFESSIONAL ULYSSES C. KOUTSOGIANNIS ENGINEER PE073912

CLEARFIELD COUNTY
SR 1001 SECTION MTF
SEG 0132 OFFSET 0701
CR 65.60 (CRESSON BRANCH) STA 4+65.11
OVER SR 1001 (RIVER ROAD)
STEEL THROUGH PLATE GIRDER & STEEL THROUGH TRUSS BRIDGE

GIRDER & FRAMING DETAILS 6 OF 16

PREPARED BY:
HNTB CORPORATION
4507 NORTH FRONT STREET
SUITE 300
HARRISBURG, PA 17110

RECOMMENDED _____

SHEET 21 OF 54

S-1001RJC

2/12/2024
FILENAME: 17861-W013-s-br-frd06.dgn

DES: JAC	DES CKD: MDB	DWG: DAC	DWG CKD: JAC

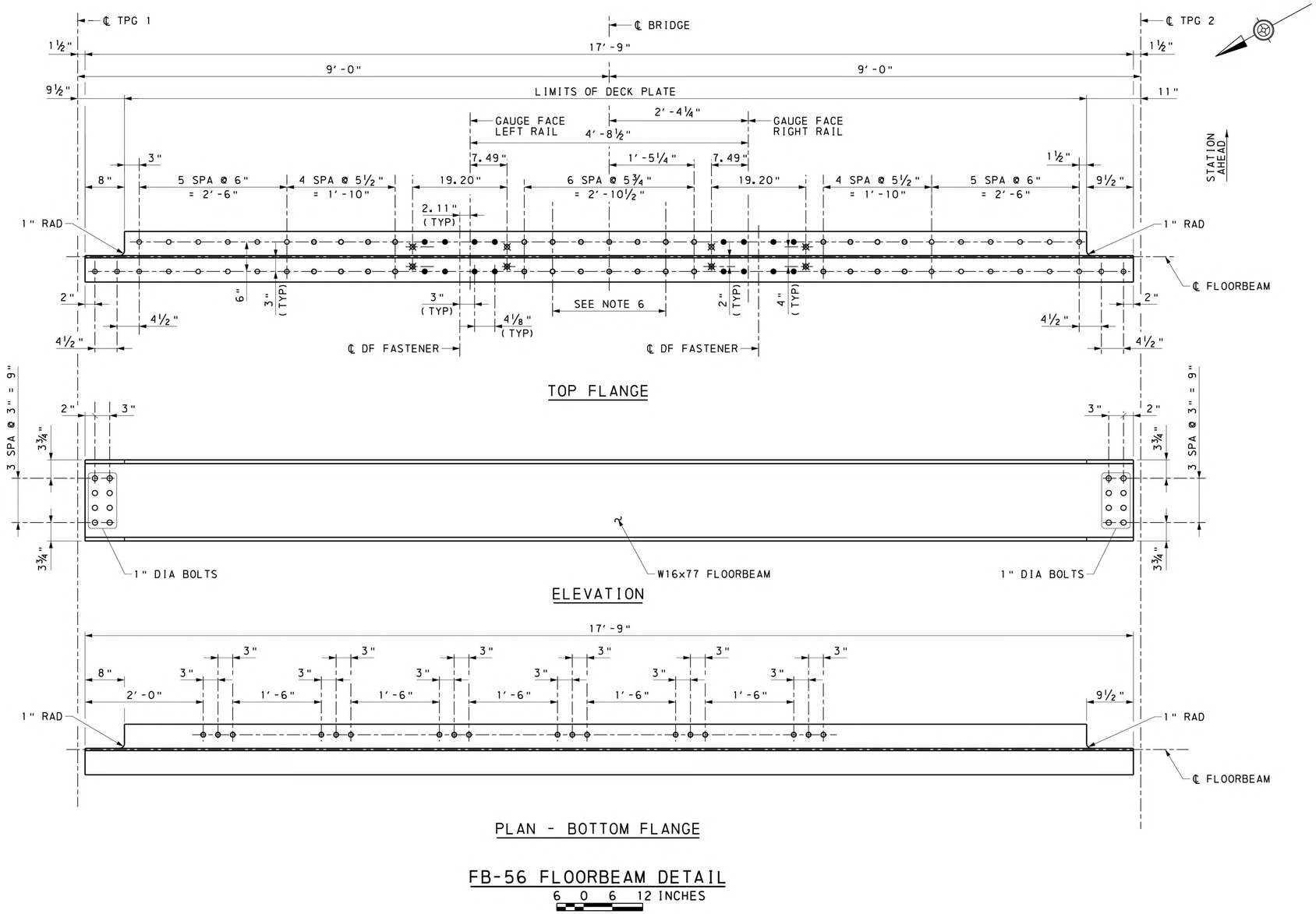

FB-56 FLOORBEAM DETAIL

6 0 6 12 INCHES

NOTES:

1. FOR FULL LENGTH FLOORBEAM TABLE, SEE SHEET 18.
2. FOR STAKE-OUT PLAN, SEE SHEET 6.
3. FOR FRAMING PLAN & GIRDER ELEVATION, SEE SHEET 15.
4. FOR GIRDER & FRAMING DETAILS, SEE SHEETS 16-21 & 23-31.
5. FOR DECK PLAN & DETAILS, SEE SHEETS 38-42.
6. BOLTS SHALL BE USED TO FASTEN GUARD RAIL TO STRUCTURE. FOR GUARD RAIL DETAILS, SEE SHEET 47.

LEGEND:

ALL BOLTS A325 UNLESS NOTED OTHERWISE

- o HEX HEAD BOLT
- ● COUNTERSUNK BOLT
- ⊗ DIRECT FIXATION FASTENER BOLT

Mark	Description	By	Chk'd	Recm'd	Date
REVISIONS					

MPMS/ECMS PROJ: 115877

HNTB

COMMONWEALTH OF PENNSYLVANIA
DEPARTMENT OF TRANSPORTATION

COMMONWEALTH OF PENNSYLVANIA
REGISTERED PROFESSIONAL
ULYSSES C. KOUTSOGIANNIS
ENGINEER
PE073912

CLEARFIELD COUNTY
SR 1001 SECTION MTF
SEG 0132 OFFSET 0701
CR 65.60 (CRESSON BRANCH) STA 4+65.11
OVER SR 1001 (RIVER ROAD)
STEEL THROUGH PLATE GIRDER & STEEL THROUGH TRUSS BRIDGE
GIRDER & FRAMING DETAILS 7 OF 16

PREPARED BY:
HNTB CORPORATION
4507 NORTH FRONT STREET
SUITE 300
HARRISBURG, PA 17110

RECOMMENDED _____

SHEET 22 OF 54

S-1001RJC

2/12/2024
FILENAME: 77861-W013-s-br-frd07.dgn

DES: JAC	DES CKD: MDB	DWG: DAC	DWG CKD: JAC

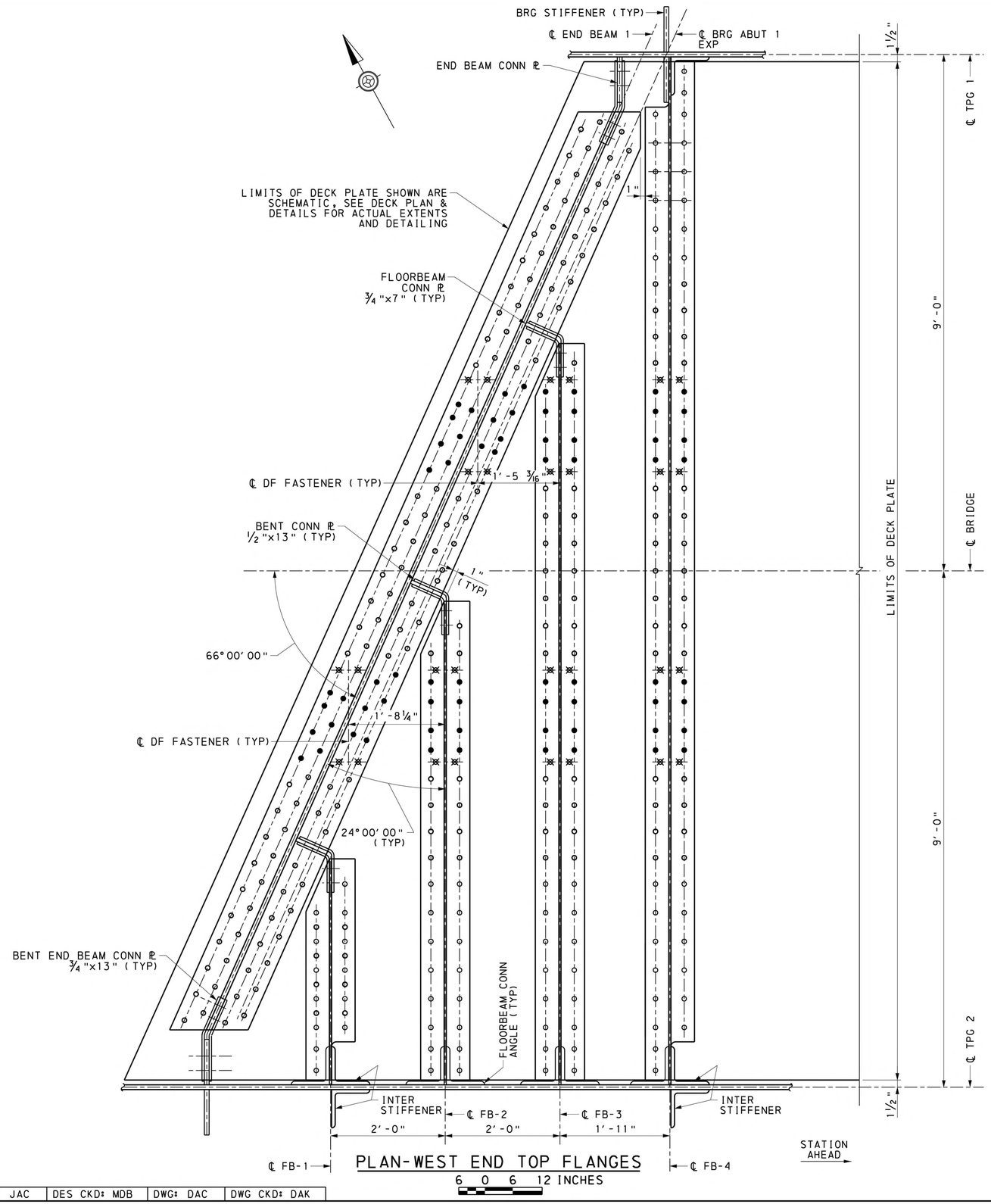

PLAN-WEST END TOP FLANGES

NOTES:

1. FOR STAKE-OUT PLAN, SEE SHEET 6.
2. FOR FRAMING PLAN & GIRDER ELEVATION, SEE SHEET 15.
3. FOR GIRDER & FRAMING DETAILS, SEE SHEETS 16-22 & 24-31.
4. FOR FLOORBEAM FB-1 THRU FB-3, SEE SHEETS 27-29.
5. FOR DIRECT FIXATION (DF) FASTENER BOLT PATTERN, SEE SHEET 24.
6. FOR DECK PLAN & DETAILS, SEE SHEETS 38-42.
7. FOR GUARD RAIL DETAILS, SEE SHEET 47.

LEGEND:

ALL BOLTS A325 UNLESS NOTED OTHERWISE

- o HEX HEAD BOLT
- ● COUNTERSUNK BOLT
- ⊠ DIRECT FIXATION FASTENER BOLT

Mark	Description	By	Chk'd	Recm'd	Date
REVISIONS					

MPMS/ECMS PROJ: 115877

HNTB

COMMONWEALTH OF PENNSYLVANIA
DEPARTMENT OF TRANSPORTATION

CLEARFIELD COUNTY
SR 1001 SECTION MTF
SEG 0132 OFFSET 0701
CR 65.60 (CRESSON BRANCH) STA 4+65.11
OVER SR 1001 (RIVER ROAD)
STEEL THROUGH PLATE GIRDER & STEEL THROUGH TRUSS BRIDGE
GIRDER & FRAMING DETAILS 8 OF 16

COMMONWEALTH OF PENNSYLVANIA
REGISTERED PROFESSIONAL
ULYSSES C. KOUTSOGIANNIS
ENGINEER
PE073912

PREPARED BY:
HNTB CORPORATION
4507 NORTH FRONT STREET
SUITE 300
HARRISBURG, PA 17110

RECOMMENDED _____

SHEET 23 OF 54

S-1001RJC

2/12/2024
FILENAME: 77861-W013-s-br-frd08.dgn

DES: JAC	DES CKD: MDB	DWG: DAC	DWG CKD: DAK

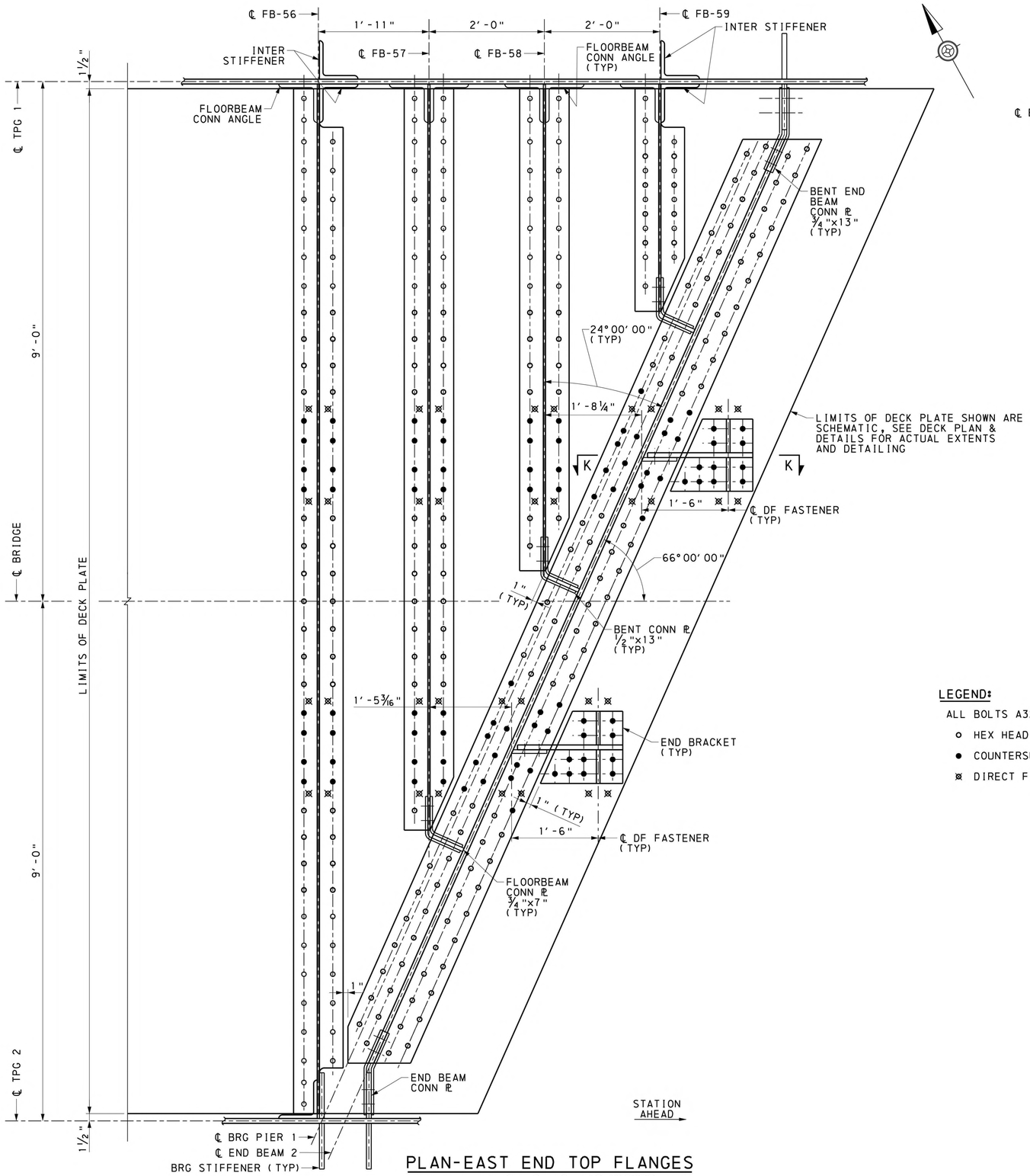

PLAN-EAST END TOP FLANGES

6 0 6 12 INCHES

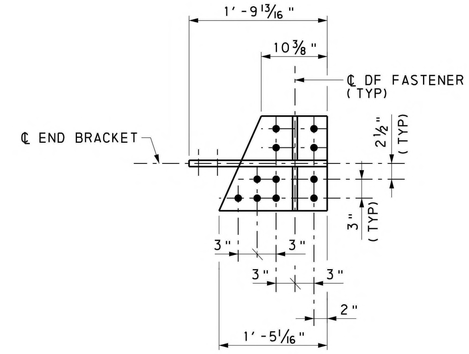

PLAN - END BRACKET

6 0 6 12 INCHES

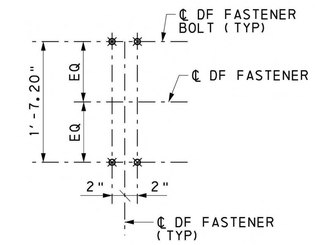

DIRECT FIXATION (DF) FASTENER BOLT PATTERN

6 0 6 12 INCHES

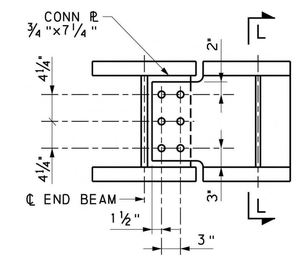

SECTION K-K

6 0 6 12 INCHES

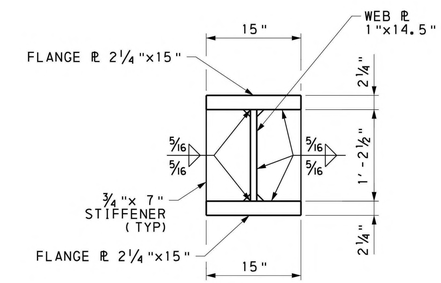

SECTION L-L

6 0 6 12 INCHES

LEGEND:

ALL BOLTS A325 UNLESS NOTED OTHERWISE

- ○ HEX HEAD BOLT
- ● COUNTERSUNK BOLT
- ⊠ DIRECT FIXATION FASTENER BOLT

NOTES:

1. FOR STAKE-OUT PLAN, SEE SHEET 6.
2. FOR FRAMING PLAN & GIRDER ELEVATION, SEE SHEET 15.
3. FOR GIRDER & FRAMING DETAILS, SEE SHEETS 16-23 & 25-31.
4. FOR FLOORBEAM FB-57 THRU FB-59, SEE SHEETS 27-29.
5. FOR DECK PLAN & DETAILS, SEE SHEETS 38-42.
6. FOR GUARD RAIL DETAILS, SEE SHEET 47.

Mark	Description	By	Chk'd	Recm'd	Date
REVISIONS					

MPMS/ECMS PROJ: 115877

HNTB

COMMONWEALTH OF PENNSYLVANIA
DEPARTMENT OF TRANSPORTATION

CLEARFIELD COUNTY
SR 1001 SECTION MTF
SEG 0132 OFFSET 0701
CR 65.60 (CRESSON BRANCH) STA 4+65.11
OVER SR 1001 (RIVER ROAD)
STEEL THROUGH PLATE GIRDER & STEEL THROUGH TRUSS BRIDGE
GIRDER & FRAMING DETAILS 9 OF 16

COMMONWEALTH OF PENNSYLVANIA
REGISTERED PROFESSIONAL
ULYSSES C. KOUTSOGIANNIS
ENGINEER
PE073912

PREPARED BY:
HNTB CORPORATION
4507 NORTH FRONT STREET
SUITE 300
HARRISBURG, PA 17110

RECOMMENDED _____

SHEET 24 OF 54

S-1001RJC

2/12/2024
FILENAME: 77861-W013-s-br-frd09.dgn

DES: JAC	DES CKD: MDB	DWG: DAC	DWG CKD: DAK

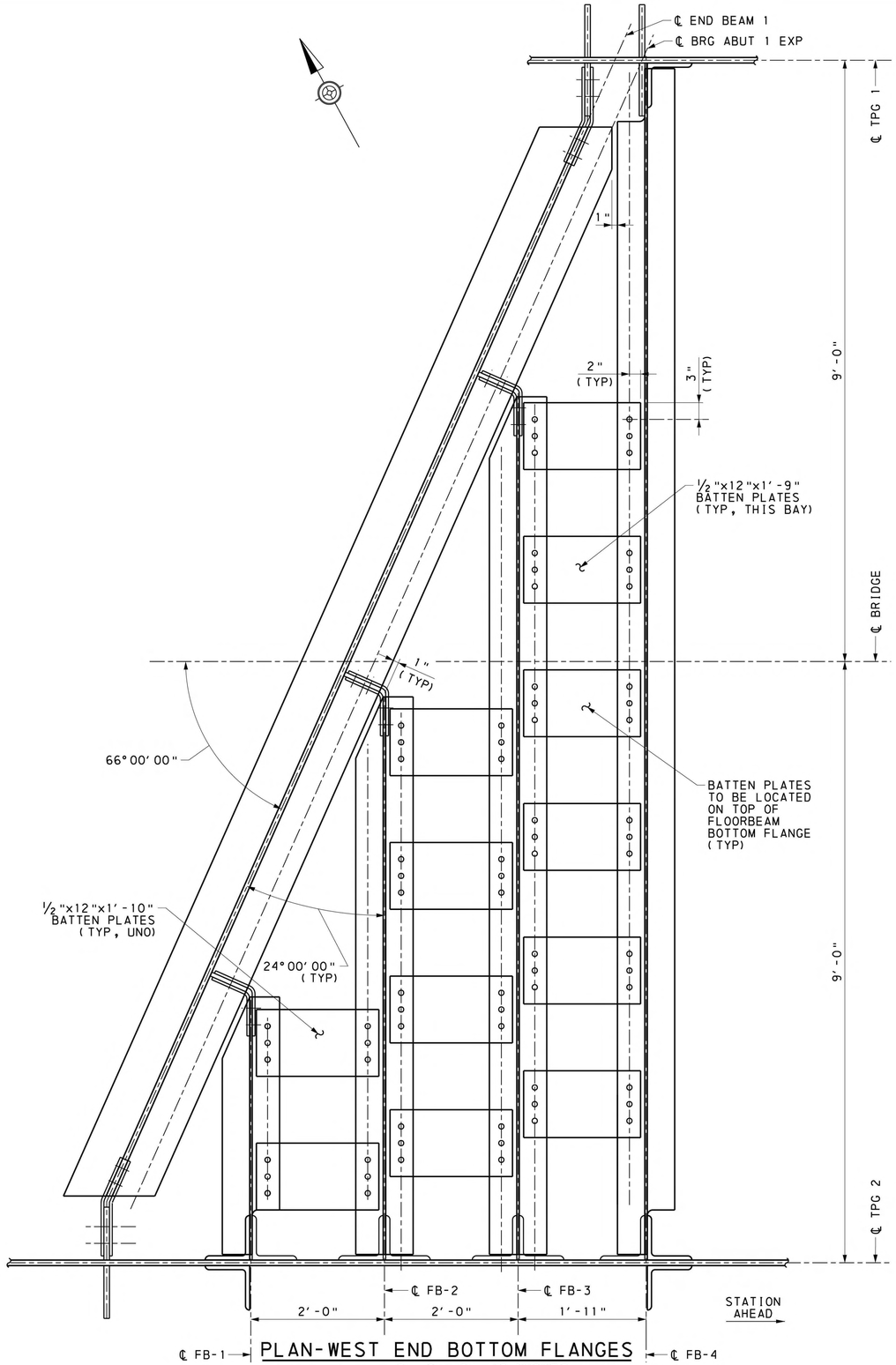

PLAN-WEST END BOTTOM FLANGES

NOTES:

1. FOR STAKE-OUT PLAN, SEE SHEET 6.
2. FOR FRAMING PLAN & GIRDER ELEVATION, SEE SHEET 15.
3. FOR GIRDER & FRAMING DETAILS, SEE SHEETS 16-24 & 26-31.
4. FOR FLOORBEAM FB-1 THRU FB-4, SEE SHEETS 27-29.

LEGEND:

ALL BOLTS A325 UNLESS NOTED OTHERWISE

- o HEX HEAD BOLT
- ● COUNTERSUNK BOLT
- ⊠ DIRECT FIXATION FASTENER BOLT

Mark	Description	By	Chk'd	Recm'd	Date
REVISIONS					

MPMS/ECMS PROJ: 115877

HNTB

COMMONWEALTH OF PENNSYLVANIA
DEPARTMENT OF TRANSPORTATION

CLEARFIELD COUNTY
SR 1001 SECTION MTF
SEG 0132 OFFSET 0701
CR 65.60 (CRESSON BRANCH) STA 4+65.11
OVER SR 1001 (RIVER ROAD)
STEEL THROUGH PLATE GIRDER & STEEL THROUGH TRUSS BRIDGE

GIRDER & FRAMING DETAILS 10 OF 16

COMMONWEALTH OF PENNSYLVANIA
REGISTERED PROFESSIONAL
ULYSSES C. KOUTSOGIANNIS
ENGINEER
PE073912

PREPARED BY:
HNTB CORPORATION
4507 NORTH FRONT STREET
SUITE 300
HARRISBURG, PA 17110

RECOMMENDED _____

SHEET 25 OF 54

S-1001RJC

DES: JAC	DES CKD: MDB	DWG: DAC	DWG CKD: DAK

2/12/2024
FILENAME: 77861-M013-s-br-frd10.dgn

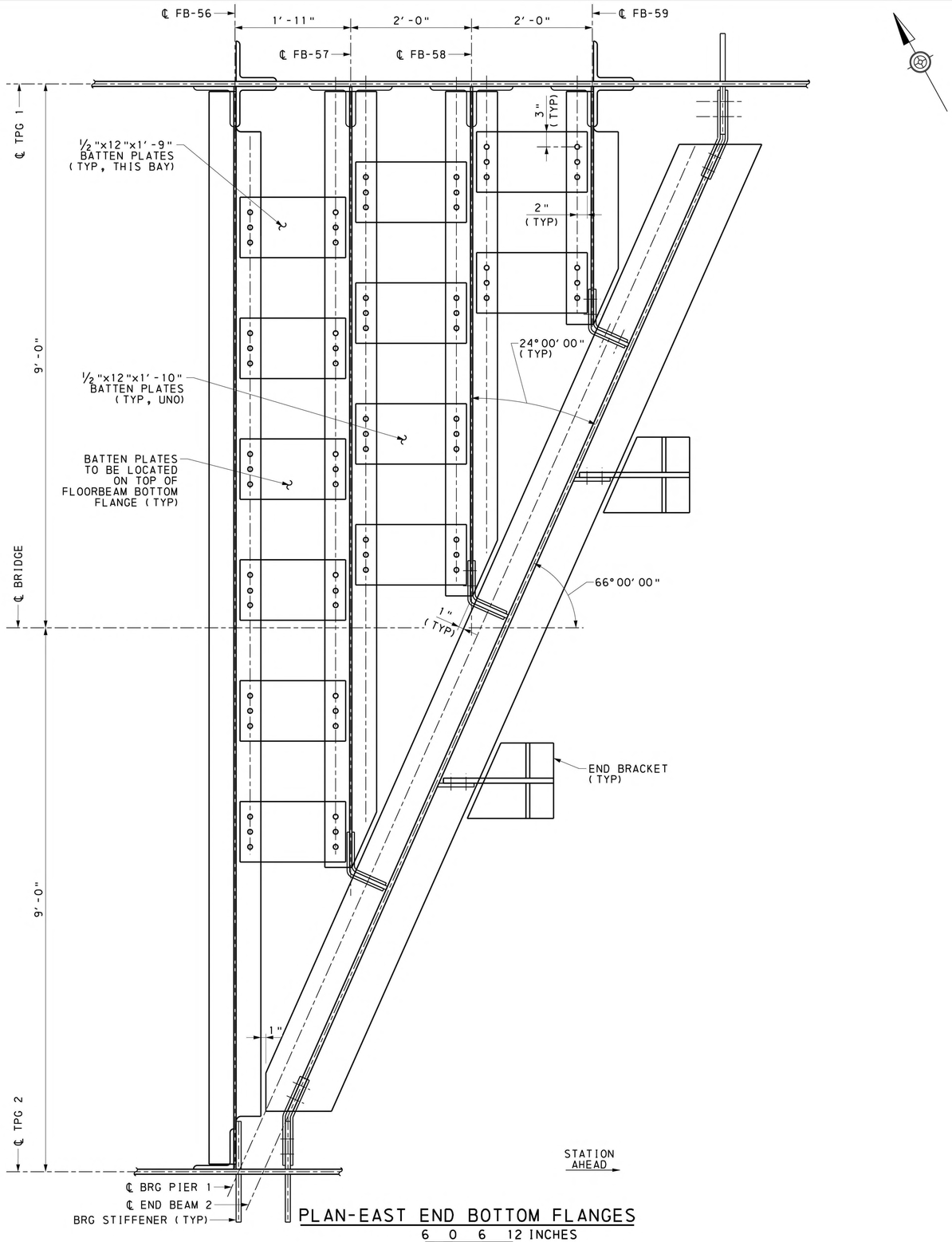

PLAN-EAST END BOTTOM FLANGES

6 0 6 12 INCHES

NOTES:

1. FOR STAKE-OUT PLAN, SEE SHEET 6.
2. FOR FRAMING PLAN & GIRDER ELEVATION, SEE SHEET 15.
3. FOR GIRDER & FRAMING DETAILS, SEE SHEETS 16-25 & 27-31.
4. FOR FLOORBEAM FB-57 THRU FB-59, SEE SHEETS 27-29.

LEGEND:

ALL BOLTS A325 UNLESS NOTED OTHERWISE

- ○ HEX HEAD BOLT
- ● COUNTERSUNK BOLT
- ⊠ DIRECT FIXATION FASTENER BOLT

Mark	Description	By	Chk'd	Recm'd	Date
REVISIONS					

MPMS/ECMS PROJ: 115877

HNTB

COMMONWEALTH OF PENNSYLVANIA
DEPARTMENT OF TRANSPORTATION

CLEARFIELD COUNTY
SR 1001 SECTION MTF
SEG 0132 OFFSET 0701
CR 65.60 (CRESSON BRANCH) STA 4+65.11
OVER SR 1001 (RIVER ROAD)
STEEL THROUGH PLATE GIRDER & STEEL THROUGH TRUSS BRIDGE

GIRDER & FRAMING DETAILS 11 OF 16

COMMONWEALTH OF PENNSYLVANIA
REGISTERED PROFESSIONAL
ULYSSES C. KOUTSOGIANNIS
ENGINEER
PE073912

PREPARED BY:
HNTB CORPORATION
4507 NORTH FRONT STREET
SUITE 300
HARRISBURG, PA 17110

RECOMMENDED _____

SHEET 26 OF 54

S-1001RJC

2/12/2024
FILENAME: 77861-W013-s-br-frdtl.dgn

DES: JAC	DES CKD: MDB	DWG: DAC	DWG CKD: DAK

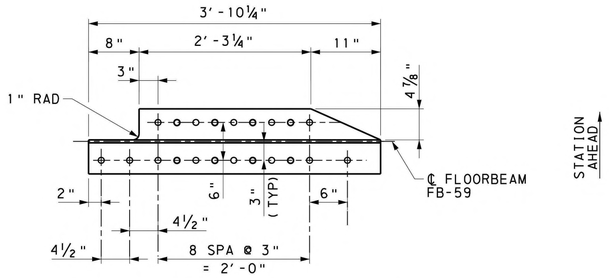

PLAN - TOP FLANGE FB-59

6 0 6 12 INCHES

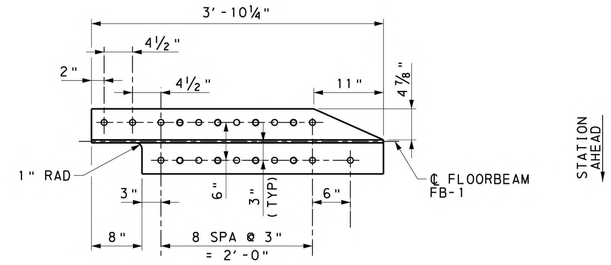

PLAN - TOP FLANGE FB-1

6 0 6 12 INCHES

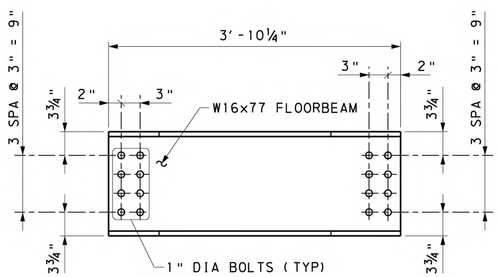

ELEVATION - FB-59

6 0 6 12 INCHES

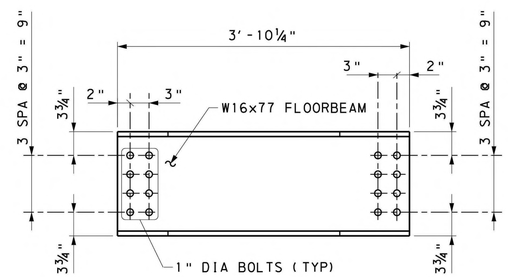

ELEVATION - FB-1

6 0 6 12 INCHES

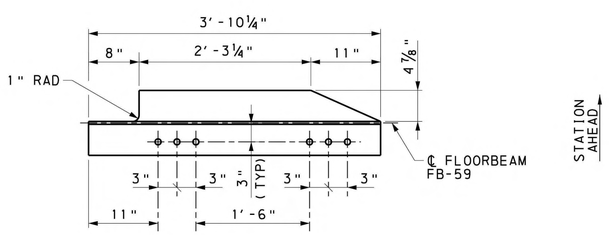

PLAN - BOTTOM FLANGE FB-59

6 0 6 12 INCHES

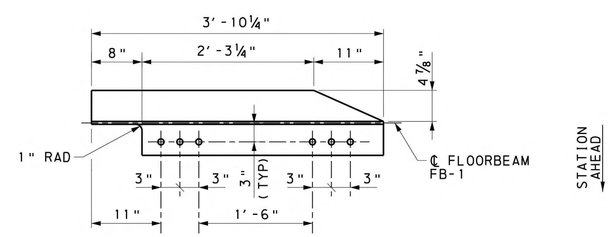

PLAN - BOTTOM FLANGE FB-1

6 0 6 12 INCHES

NOTES:

1. FOR FRAMING PLAN & GIRDER ELEVATION, SEE SHEET 15.
2. FOR FB-1 AND FB-59 FRAMING DETAILS, SEE SHEETS 23 AND 24, RESPECTIVELY.
3. FOR DIRECT FIXATION FASTENER BOLT PATTERN, SEE SHEET 24.

Mark	Description	By	Chk'd	Recm'd	Date
REVISIONS					

MPMS/ECMS PROJ: 115877

HNTB

COMMONWEALTH OF PENNSYLVANIA
REGISTERED PROFESSIONAL
ULYSSES C. KOUTSOGIANNIS
ENGINEER
PE073912

PREPARED BY:

HNTB CORPORATION
4507 NORTH FRONT STREET
SUITE 300
HARRISBURG, PA 17110

COMMONWEALTH OF PENNSYLVANIA
DEPARTMENT OF TRANSPORTATION

CLEARFIELD COUNTY
SR 1001 SECTION MTF
SEG 0132 OFFSET 0701
CR 65.60 (CRESSON BRANCH) STA 4+65.11
OVER SR 1001 (RIVER ROAD)
STEEL THROUGH PLATE GIRDER & STEEL THROUGH TRUSS BRIDGE

GIRDER & FRAMING DETAILS 12 OF 16

RECOMMENDED _____

SHEET 27 OF 54

S-1001RJC

DES: JAC	DES CKD: MDB	DWG: DAC	DWG CKD: DAK

2/12/2024
FILENAME: 77861-W013-s-br-frd12.dgn

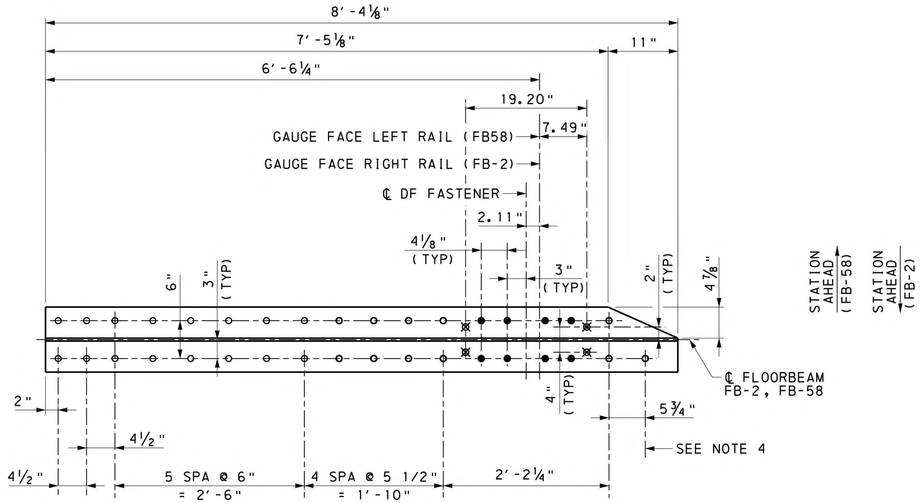

PLAN - TOP FLANGE FB-2 & FB-58

6 0 6 12 INCHES

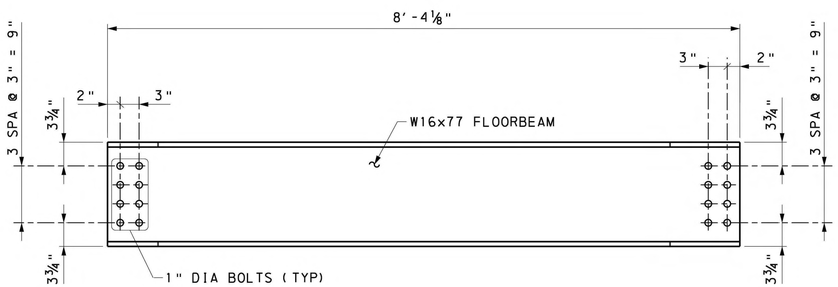

ELEVATION

6 0 6 12 INCHES

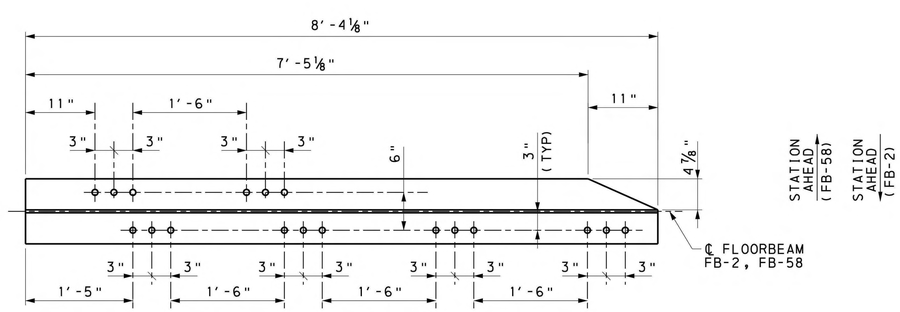

PLAN - BOTTOM FLANGE FB-2 & FB-58

6 0 6 12 INCHES

NOTES:

1. FOR FRAMING PLAN & GIRDER ELEVATION, SEE SHEET 15.
2. FOR FB-2 AND FB-58 FRAMING DETAILS, SEE SHEETS 23 AND 24, RESPECTIVELY.
3. FOR DIRECT FIXATION FASTENER BOLT PATTERN, SEE SHEET 24.
4. BOLT SHALL BE USED TO FASTEN GUARD RAIL TO STRUCTURE. FOR GUARD RAIL DETAILS, SEE SHEET 47.

LEGEND:

ALL BOLTS A325 UNLESS NOTED OTHERWISE

- ○ HEX HEAD BOLT
- ● COUNTERSUNK BOLT
- ⊠ DIRECT FIXATION FASTENER BOLT

Mark	Description	By	Chk'd	Recm'd	Date
REVISIONS					

MPMS/ECMS PROJ: 115877

HNTB

COMMONWEALTH OF PENNSYLVANIA
DEPARTMENT OF TRANSPORTATION

COMMONWEALTH OF PENNSYLVANIA REGISTERED PROFESSIONAL ULYSSES C. KOUTSOGIANNIS ENGINEER PE073912

CLEARFIELD COUNTY
SR 1001 SECTION MTF
SEG 0132 OFFSET 0701
CR 65.60 (CRESSON BRANCH) STA 4+65.11
OVER SR 1001 (RIVER ROAD)
STEEL THROUGH PLATE GIRDER & STEEL THROUGH TRUSS BRIDGE

GIRDER & FRAMING DETAILS 13 OF 16

PREPARED BY:
HNTB CORPORATION
4507 NORTH FRONT STREET
SUITE 300
HARRISBURG, PA 17110

RECOMMENDED _____

SHEET 28 OF 54

S-1001RJC

2/12/2024
FILENAME: 77861-W013-s-br-frd13.dgn

DES: JAC	DES CKD: MDB	DWG: DAC	DWG CKD: DAK

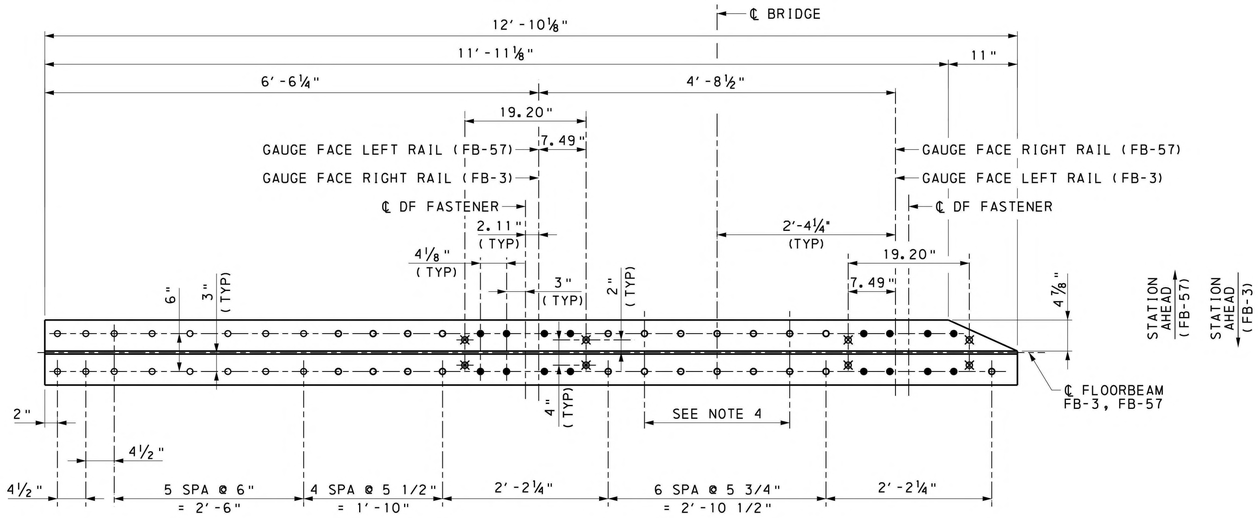

PLAN - TOP FLANGE FB-3 & FB-57

6 0 6 12 INCHES

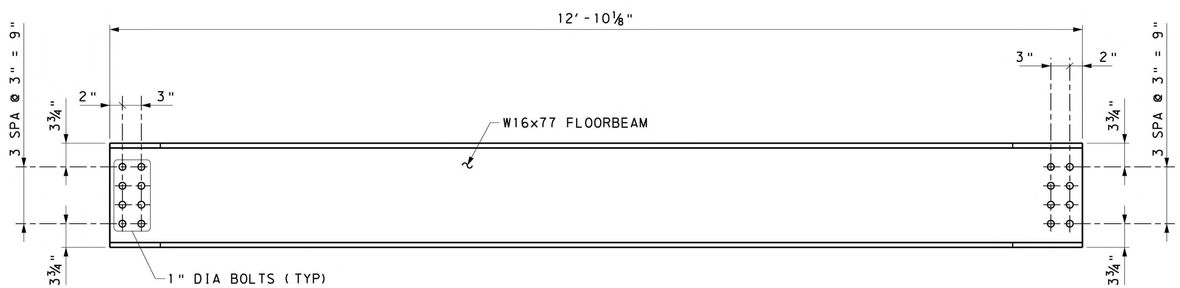

ELEVATION

6 0 6 12 INCHES

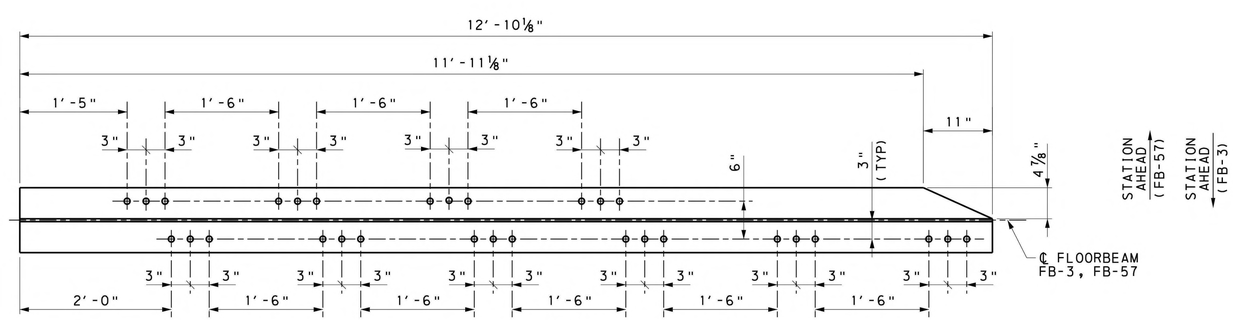

PLAN - BOTTOM FLANGE FB-3 & FB-57

6 0 6 12 INCHES

NOTES:

1. FOR FRAMING PLAN & GIRDER ELEVATION, SEE SHEET 15.
2. FOR FB-3 AND FB-57 FRAMING DETAILS, SEE SHEETS 23 AND 24, RESPECTIVELY.
3. FOR DIRECT FIXATION FASTENER BOLT PATTERN, SEE SHEET 24.
4. BOLTS SHALL BE USED TO FASTEN GUARD RAIL TO STRUCTURE. FOR GUARD RAIL DETAILS, SEE SHEET 47.

LEGEND:

ALL BOLTS A325 UNLESS NOTED OTHERWISE

- o HEX HEAD BOLT
- ● COUNTERSUNK BOLT
- ⊠ DIRECT FIXATION FASTENER BOLT

Mark	Description	By	Chk'd	Recm'd	Date
REVISIONS					

MPMS/ECMS PROJ: 115877

HNTB

COMMONWEALTH OF PENNSYLVANIA
DEPARTMENT OF TRANSPORTATION

CLEARFIELD COUNTY
SR 1001 SECTION MTF
SEG 0132 OFFSET 0701
CR 65.60 (CRESSON BRANCH) STA 4+65.11
OVER SR 1001 (RIVER ROAD)
STEEL THROUGH PLATE GIRDER & STEEL THROUGH TRUSS BRIDGE
GIRDER & FRAMING DETAILS 14 OF 16

COMMONWEALTH OF PENNSYLVANIA
REGISTERED PROFESSIONAL
ULYSSES C. KOUTSOGIANNIS
ENGINEER
PE073912

PREPARED BY:
HNTB CORPORATION
4507 NORTH FRONT STREET
SUITE 300
HARRISBURG, PA 17110

RECOMMENDED _____

SHEET 29 OF 54

S-1001RJC

2/12/2024
FILENAME: 77861-W013-s-br-frd14.dgn

DES: JAC	DES CKD: MDB	DWG: DAC	DWG CKD: DAK

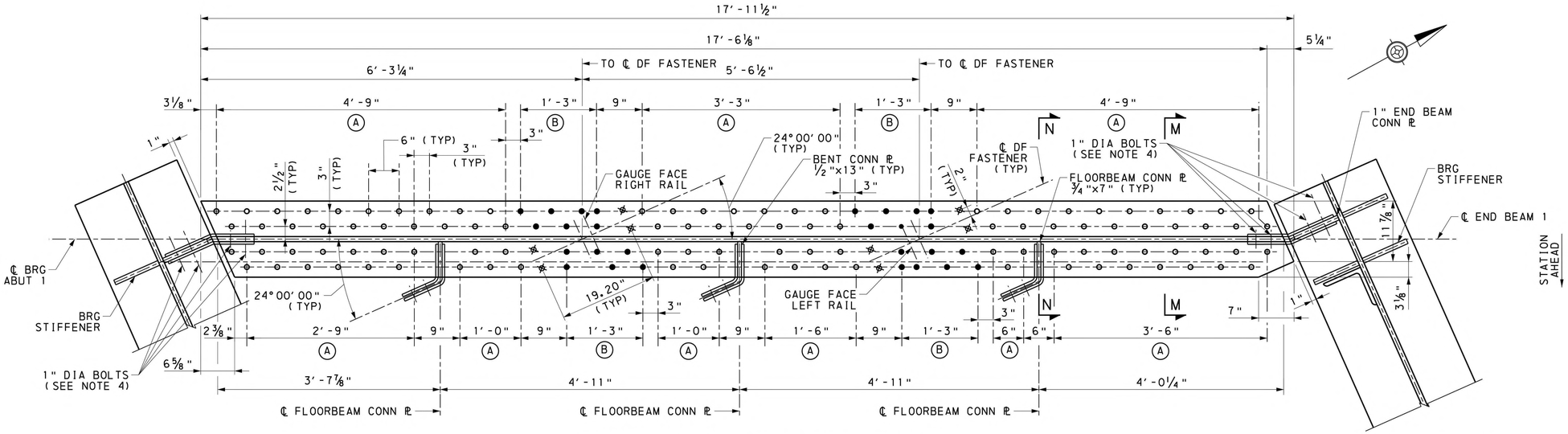

PLAN - TOP FLANGE END BEAM 1

6 0 6 12 INCHES

LEGEND:

(A) 3" BOLT SPACING, STAGGERED

(B) 3" BOLT SPACING, STAGGERED & COUNTERSUNK

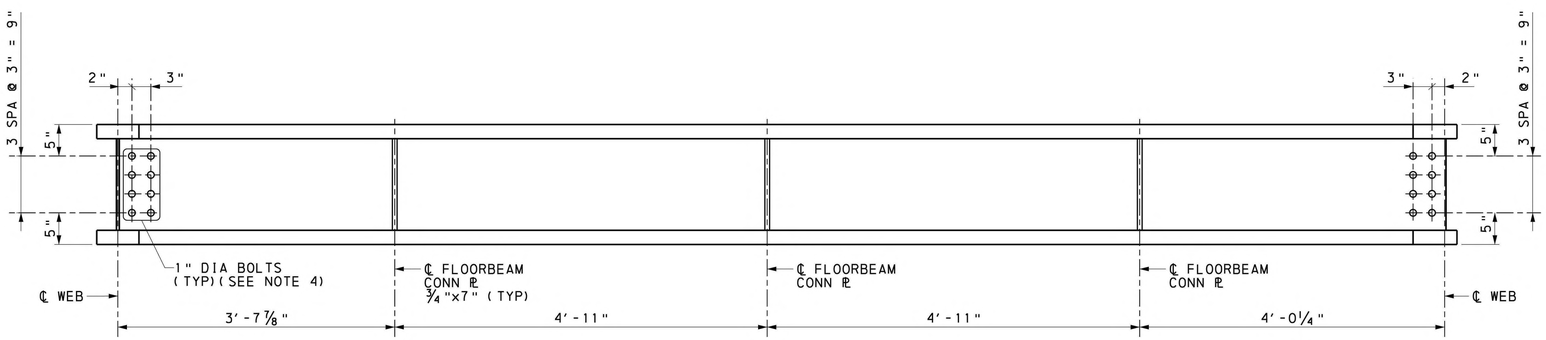

ELEVATION - END BEAM 1

6 0 6 12 INCHES

NOTES:

1. FOR FRAMING PLAN & GIRDER ELEVATION, SEE SHEET 15.
2. FOR DIRECT FIXATION FASTENER BOLT PATTERN, SEE SHEET 24.
3. FOR SECTION M-M AND N-N, SEE SHEET 31.
4. BOLTS SHALL BE ASTM F3125 GRADE A490 TYPE 1 (SLIP CRITICAL CLASS B) WITH A MINIMUM TENSION OF 64 KIPS IN ACCORDANCE WITH AREMA TABLE 15-1-12.

LEGEND:

ALL BOLTS A325 UNLESS NOTED OTHERWISE

- ○ HEX HEAD BOLT
- ● COUNTERSUNK BOLT
- ⊠ DIRECT FIXATION FASTENER BOLT

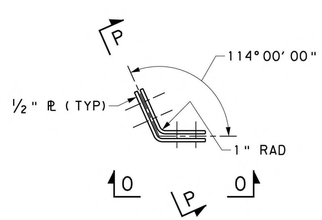

BENT CONN PLATE DETAIL

6 0 6 12 INCHES

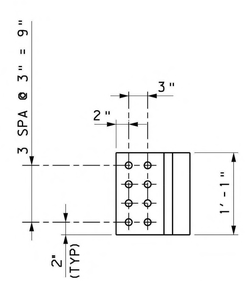

SECTION P-P

6 0 6 12 INCHES

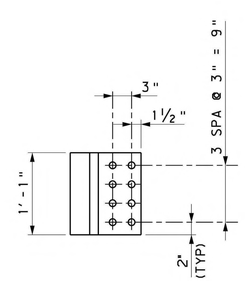

SECTION O-O

6 0 6 12 INCHES

Mark	Description	By	Chk'd	Recm'd	Date
REVISIONS					

MPMS/ECMS PROJ: 115877

HNTB

COMMONWEALTH OF PENNSYLVANIA
DEPARTMENT OF TRANSPORTATION

CLEARFIELD COUNTY
SR 1001 SECTION MTF
SEG 0132 OFFSET 0701
CR 65.60 (CRESSON BRANCH) STA 4+65.11
OVER SR 1001 (RIVER ROAD)
STEEL THROUGH PLATE GIRDER & STEEL THROUGH TRUSS BRIDGE

GIRDER & FRAMING DETAILS 15 OF 16

COMMONWEALTH OF PENNSYLVANIA
REGISTERED PROFESSIONAL
ULYSSES C. KOUTSOGIANNIS
ENGINEER
PE073912

PREPARED BY:
HNTB CORPORATION
4507 NORTH FRONT STREET
SUITE 300
HARRISBURG, PA 17110

RECOMMENDED _____

SHEET 30 OF 54

S-1001RJC

2/12/2024
FILENAME: 77861-W013-s-br-frd15.dgn

DES: JAC	DES CKD: MDB	DWG: DAC	DWG CKD: DAK

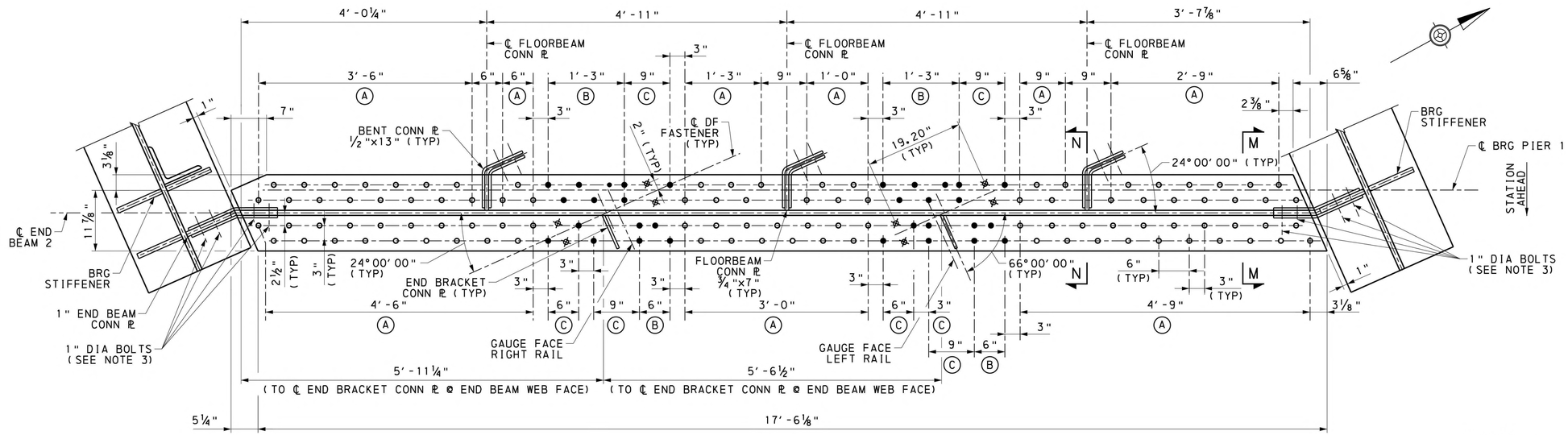

PLAN - TOP FLANGE END BEAM 2

6 0 6 12 INCHES

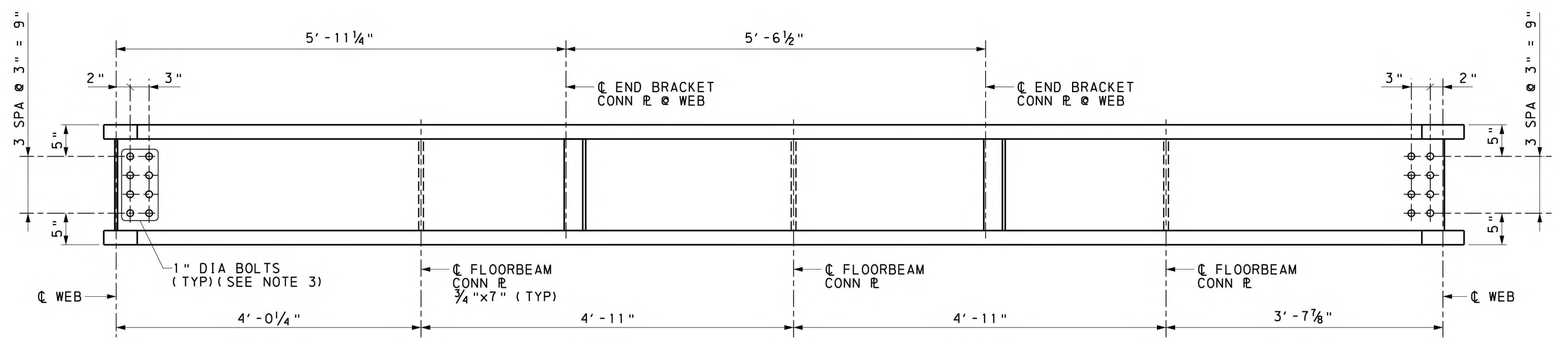

ELEVATION - END BEAM 2

6 0 6 12 INCHES

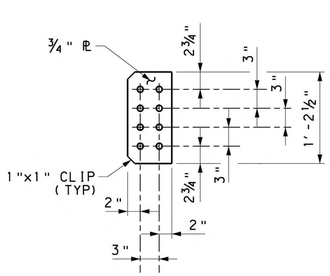

FLOORBEAM CONN PL DETAIL

6 0 6 12 INCHES

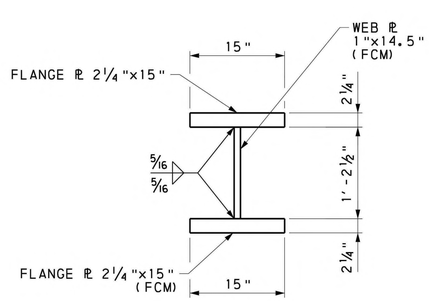

SECTION M-M

6 0 6 12 INCHES

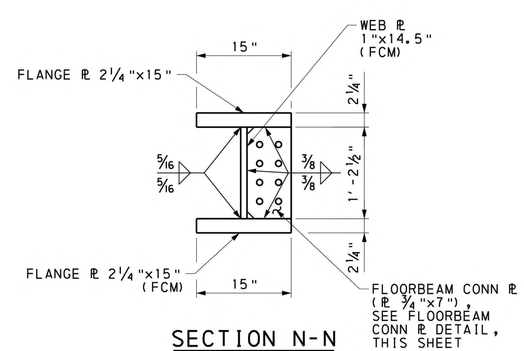

SECTION N-N

6 0 6 12 INCHES

LEGEND:

- (A) 3" BOLT SPACING, STAGGERED
- (B) 3" BOLT SPACING, STAGGERED & COUNTERSUNK
- (C) BOLT SPACING AS SHOWN, COUNTERSUNK

NOTES:

1. FOR FRAMING PLAN & GIRDER ELEVATION, SEE SHEET 15.
2. FOR DIRECT FIXATION FASTENER BOLT PATTERN, SEE SHEET 24.
3. BOLTS SHALL BE ASTM F3125 GRADE A490 TYPE 1 (SLIP CRITICAL CLASS B) WITH A MINIMUM TENSION OF 64 KIPS IN ACCORDANCE WITH AREMA TABLE 15-1-12.

LEGEND:

ALL BOLTS A325 UNLESS NOTED OTHERWISE

- ○ HEX HEAD BOLT
- ● COUNTERSUNK BOLT
- ⊗ DIRECT FIXATION FASTENER BOLT

Mark	Description	By	Chk'd	Recm'd	Date

REVISIONS

MPMS/ECMS PROJ: 115877

HNTB

COMMONWEALTH OF PENNSYLVANIA
DEPARTMENT OF TRANSPORTATION

CLEARFIELD COUNTY
SR 1001 SECTION MTF
SEG 0132 OFFSET 0701
CR 65.60 (CRESSON BRANCH) STA 4+65.11
OVER SR 1001 (RIVER ROAD)
STEEL THROUGH PLATE GIRDER & STEEL THROUGH TRUSS BRIDGE

GIRDER & FRAMING DETAILS 16 OF 16

COMMONWEALTH OF PENNSYLVANIA
REGISTERED PROFESSIONAL
ULYSSES C. KOUTSOGIANNIS
ENGINEER
PE073912

PREPARED BY:
HNTB CORPORATION
4507 NORTH FRONT STREET
SUITE 300
HARRISBURG, PA 17110

RECOMMENDED _____

SHEET 31 OF 54

S-1001RJC

2/12/2024
FILENAME: 77861-M013-s-br-frd16.dgn

DES: JAC	DES CKD: MDB	DWG: DAC	DWG CKD: DAK

NOTES:

1. DESIGN DISC TYPE HIGH LOAD MULTI-ROTATIONAL BEARINGS IN CONFORMANCE WITH AREMA MANUAL CHAPTER 15 BEARING DESIGN. FABRICATION, DELIVERY, STORAGE, AND HANDLING TO BE IN ACCORDANCE WITH THE SPECIFICATIONS.
2. CROSS HATCHED COMPONENTS OF THE BEARINGS ARE SHOWN FOR REPRESENTATIVE PURPOSES ONLY. THE ACTUAL DETAILS AND CONFIGURATION OF THE COMPONENTS DEPEND UPON THE SPECIFIC BEARING AS FINISHED BY THE SELECTED BEARING MANUFACTURER.
3. NON-SHRINK GROUT PAD SHALL BE USED TO ADJUST BEARING ELEVATIONS AS NECESSARY FOR INSTALLATION PROCESS.
4. SEE SHEET 7 FOR ANCHOR BOLT WELL DETAIL AND NOTES.
5. THE CONTRACTOR, IN COORDINATION WITH THE BEARING MANUFACTURER, SHALL BE RESPONSIBLE FOR THE DESIGN AND FURNISHING OF THE BEARINGS. THIS INCLUDES THE SOLE PLATE, MASONRY PLATE, GUIDE BARS, BEARING ASSEMBLY, AND THEIR RESPECTIVE WELDS.
6. THE CONTRACTOR SHALL SUBMIT CALCULATIONS & SHOP DRAWINGS SEALED BY A PROFESSIONAL ENGINEER, LICENSED IN THE COMMONWEALTH OF PENNSYLVANIA, INDICATING CONFORMANCE WITH THE DESIGN LOADS, ROTATIONS, MOVEMENTS, AND MATERIAL CRITERIA INDICATED ON THIS SHEET AND THE GENERAL NOTES. CALCULATIONS AND SHOP DRAWINGS FOR BEARING REPLACEMENT AT EXISTING SPAN 2 SHALL INCORPORATE NECESSARY FIELD MEASUREMENTS.
7. EXPANSION BEARINGS SHALL HAVE A MAXIMUM FRICTION COEFFICIENT OF 6%.
8. ALLOW THE CONTINUOUS WELD CONNECTING TPG BOTTOM FLANGE TO THE SOLE PLATE TO COOL AFTER EACH PASS. THE TEMPERATURE OF THE STEEL ADJACENT TO THE PTFE SHEET IS NOT TO EXCEED 200 F.
9. THE BEARING DEVICE, SOLE PLATE, AND MASONRY PLATE SHALL BE ASSEMBLED IN THE SHOP. THIS ASSEMBLY SHALL BE FIELD WELDED TO THE TPG BOTTOM FLANGE.
10. ALL BEARINGS SHALL BE MARKED PRIOR TO SHIPPING. THE MARKS SHALL INCLUDE THE BEARING LOCATION ON THE BRIDGE AND A DIRECTION ARROW THAT POINTS UP-STATION. ALL MARKS SHALL BE PERMANENT AND BE VISIBLE AFTER BEARING IS INSTALLED.
11. ALL MATERIALS SHALL BE ASTM A709, GRADE 50 EXCEPT AS NOTED OTHERWISE.
12. MATERIAL FOR PLATE THICKNESS 4" OR MORE AND LESS THAN 5" SHALL BE ASTM A588, GRADE 46.
13. MATERIAL FOR PLATE THICKNESS 5" OR MORE SHALL BE ASTM A588, GRADE 42.
14. GUIDE BARS AND SHEAR RESTRICTION MECHANISMS SHALL CONFORM TO THE MANUFACTURER'S SPECIFICATIONS AND AS APPROVED BY THE ENGINEER.
15. BEARINGS SHALL HAVE F1554 GRADE 105 ANCHOR BOLTS EXTENDED A MINIMUM OF 1'-3" INTO CONCRETE AND SHALL BE PROVIDED WITH WASHER AND HEAVY HEX NUT, ALL GALVANIZED IN ACCORDANCE WITH ASTM A153. DESIGN AND DETERMINE FINAL LOCATION OF ANCHOR BOLTS BASED ON APPROVED BEARING ASSEMBLY AND MASONRY PLATE GEOMETRY. USE FOUR OR MORE ANCHOR BOLTS PER BEARING. ANCHOR BOLT DIAMETER SHOWN ON EACH BEARING DETAILS SHEET BASED ON DESIGN LOADS AND AREMA REQUIREMENTS.
16. HARDENED WASHERS SHALL CONFORM TO ASTM F436.
17. HEAVY HEX NUTS SHALL CONFORM TO ASTM A563.
18. ALL SUBSTRUCTURE REINFORCING SHALL BE POSITIONED TO CLEAR THE ANCHOR BOLT WELLS.
19. BEARING SOLE PLATE SHALL BE CENTERED ON ℄ BEARING AT 68°F. BEARING SOLE PLATE LOCATION SHALL BE ADJUSTED WITH RESPECT TO ℄ BEARING BY 0.087" FOR EACH 10°F RISE OR FALL IN THE TEMPERATURE AT INSTALLATION.
20. BEVEL SOLE PLATE TO MATCH SLOPE OF GIRDER AS REQUIRED.
21. PROTECT THE BEARINGS FROM DAMAGE DUE TO SHEAR DEFORMATION AND ROTATION OF BEARINGS CAUSED BY THE APPLICATION OF THE GIRDER SELF-WEIGHT AND OTHER DEAD LOADS. DEFINE THE METHOD OF PROTECTION IN THE SHOP DRAWINGS.
22. THE SIZE OF THE FILLET WELD BETWEEN THE TPG AND SOLE PLATE TO BE DETERMINED BY THE BEARING MANUFACTURER. THE MINIMUM WELD SIZE SHALL BY 5/16".
23. MAKE THE FILLET WELD BETWEEN THE TPG BOTTOM FLANGE AND THE SOLE PLATE AFTER ALL THE DEAD LOADS HAVE BEEN APPLIED AND THE BEARING ASSEMBLIES HAVE BEEN SET INTO FINAL POSITION.
24. DO NOT POUR THE CONCRETE PEDESTAL SEATS UNTIL THE BEARINGS ARE SELECTED, THE BEARING SHOP DRAWINGS ARE APPROVED, AND THE PEDESTAL ELEVATIONS ARE APPROVED.
25. PAINT THE SOLE PLATE IN ACCORDANCE WITH PUBLICATION 408, SECTION 1060. THE FINISH PAINT COAT IS TO MATCH THE COLOR OF THE EXISTING ADJACENT TRUSS TO REMAIN.

HLMR BEARING DATA TABLE

ASD DESIGN			LOCATION:			
UNITS			ABUTMENT 1	PIER 1, PROPOSED SPAN 1	PIER 1, EXISTING SPAN 1	
LOAD: KIPS						
DISPLACEMENT: INCH						
ROTATION: RADIANS						
QUANTITY:			2	2	2	
BEARING TYPE:			UNIDIRECT	FIXED	UNIDIRECT	
LOAD (UNFACTORED)	VERTICAL LOAD	DEAD - MAXIMUM:	103.3	103.4	81.0	
		DEAD - MINIMUM:	103.3	103.4	81.0	
		LIVE + IM:	450.8	450.6	450.8	
		TOTAL:	554.1	554.0	531.8	*
		WIND ON LOADED STRUCTURE:	16.5	19.4	37.4	
		WIND ON UNLOADED STRUCTURE:	10.8	13.3	46.1	
		LONGITUDINAL:	6.1	5.9	6.1	
	HORIZONTAL LOAD	LONGITUDINAL:	7.7	277.7	6.5	**
		TRANSVERSE:	57.0	45.9	57.5	***
		CONTROLLING LOAD CASE:	WIND W/LL	WIND W/LL	WIND W/LL	
	NET UPLIFT:		N/A	N/A	N/A	
ROTATION (+/-)	DUE TO ALL APPLICABLE LOADS:		0.009	0.009	0.009	****
	DUE TO FAB & CONSTR TOLERANCE:		0.005	0.005	0.005	
	TOTAL:		0.014	0.014	0.014	
MOVEMENT (+/-)	LONGITUDINAL	SERVICE:	1.4	-	1.4	
		SEISMIC:	-	-	-	
		CONSTR TOLERANCE:	1.0	-	1.0	
		TOTAL:	2.4	-	2.4	
	TRANSVERSE	SERVICE:	-	-	-	
		SEISMIC:	-	-	-	
		CONSTR TOLERANCE:	-	-	-	
		TOTAL:	-	-	-	

* TOTAL LOAD ONLY INCLUDES MAX DL AND LL+IM EFFECTS. VERTICAL LOAD DUE TO WIND ON LOADED STRUCTURE, WIND ON UNLOADED STRUCTURE, AND LONGITUDINAL FORCE EFFECTS ARE TABULATED HERE FOR COMPLETENESS.

** BASED ON BEARING CONFIGURATION, LONGITUDINAL LOAD INCLUDES FORCES FROM DEAD LOAD, BRAKING/TRACTION, LIVE LOAD, IMPACT, FRICTION AND WIND ON LOADED STRUCTURE.

*** AREMA 15.5.7.3.2, MULTI ROTATIONAL BEARINGS SHALL BE DESIGNED FOR MINIMUM HORIZONTAL LOAD OF 10% OF THE VERTICAL LOAD. GOVERNS FOR EXPANSION DESIGN, LONGITUDINAL FORCE CONTROLS FOR FIXED DESIGN.

**** ALLOWANCE OF 0.005 RADIANS FOR UNCERTAINTY INCLUDED AND ADDED TO CALCULATED ROTATION DUE TO LOADS.

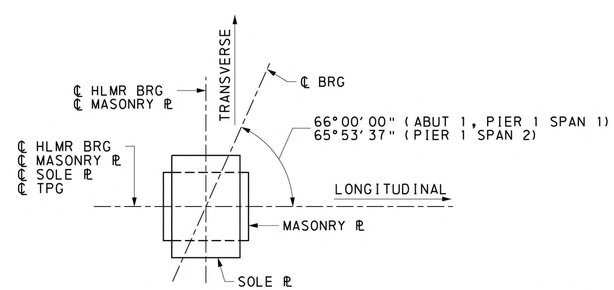

REACTION DETAIL
NOT TO SCALE

Mark	Description	By	Chk'd	Recm'd	Date
REVISIONS					

MPMS/ECMS PROJ: 115877

HNTB

COMMONWEALTH OF PENNSYLVANIA
DEPARTMENT OF TRANSPORTATION

COMMONWEALTH OF PENNSYLVANIA REGISTERED PROFESSIONAL ULYSSES C. KOUTSOGIANNIS ENGINEER PE073912

CLEARFIELD COUNTY
SR 1001 SECTION MTF
SEG 0132 OFFSET 0701
CR 65.60 (CRESSON BRANCH) STA 4+65.11
OVER SR 1001 (RIVER ROAD)
STEEL THROUGH PLATE GIRDER & STEEL THROUGH TRUSS BRIDGE
BEARING DESIGN DATA AND NOTES

PREPARED BY:
HNTB CORPORATION
4507 NORTH FRONT STREET
SUITE 300
HARRISBURG, PA 17110

RECOMMENDED _____

SHEET 32 OF 54

S-1001RJC

2/12/2024
FILENAME: 77861-W013-s-br-brg01.dgn

DES: JAC	DES CKD: MDB	DWG: DAC	DWG CKD: JAC

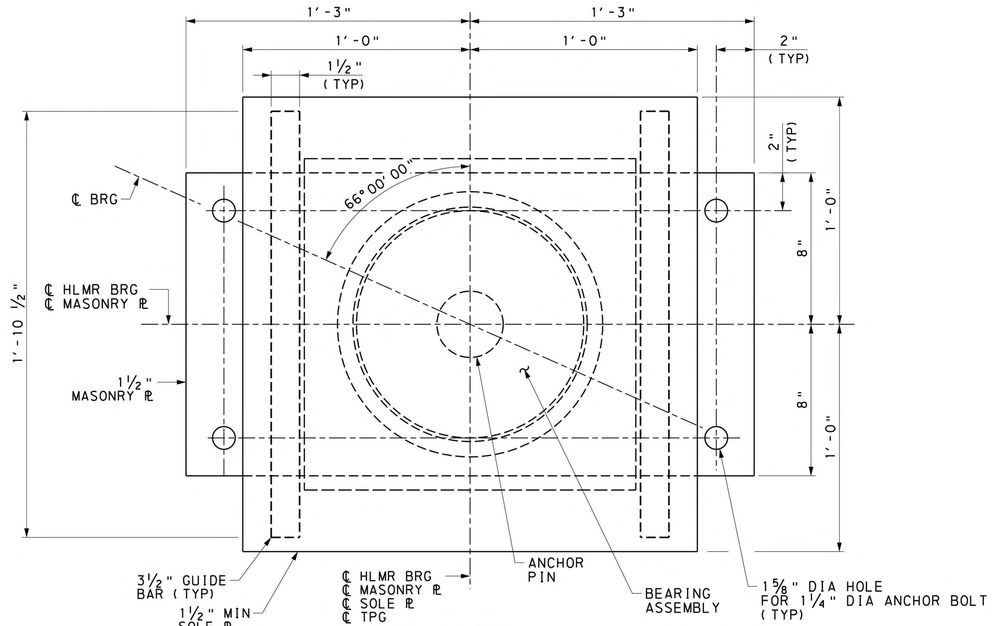

PLAN

3 0 3 INCHES

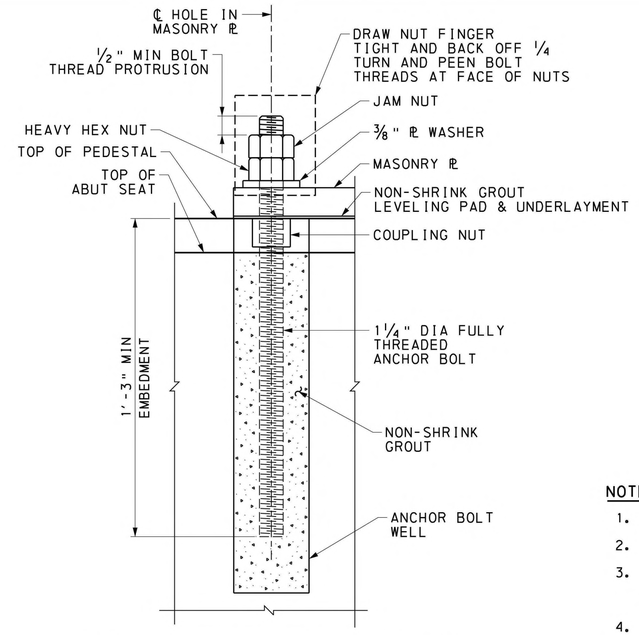

TYPICAL ANCHOR BOLT DETAIL

3 0 3 INCHES

NOTES:

1. THIS SHEET APPLIES TO ABUTMENT 1 BEARINGS.
2. FOR BEARING DESIGN DATA AND NOTES, SEE SHEET 32.
3. DIMENSION "H" IS ASSUMED TO BE 5.47" FOR PLAN DETAILS. CONTRACTOR SHALL ADJUST BEARING SEAT ELEVATION AND CONCRETE PEDESTAL HEIGHT FOR THE SUPPLIED BEARING ASSEMBLY.
4. BEARING DIMENSIONS SHOWN ARE BASED UPON PRELIMINARY BEARING MANUFACTURER DESIGN.

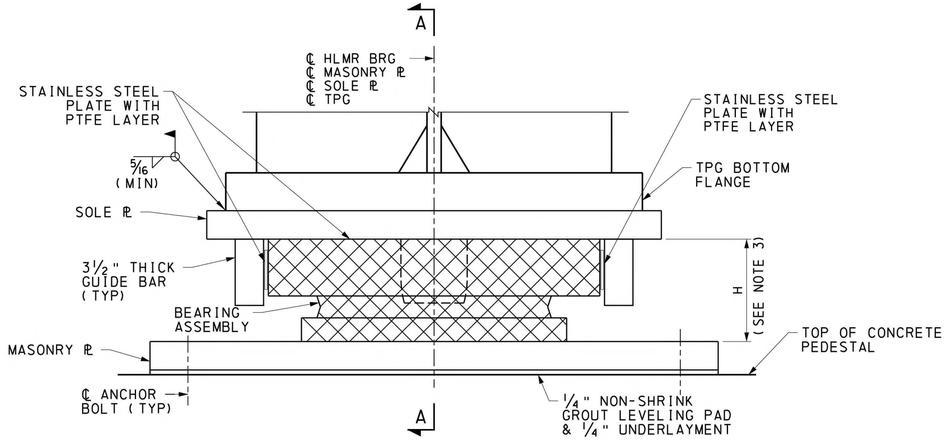

ELEVATION

3 0 3 INCHES

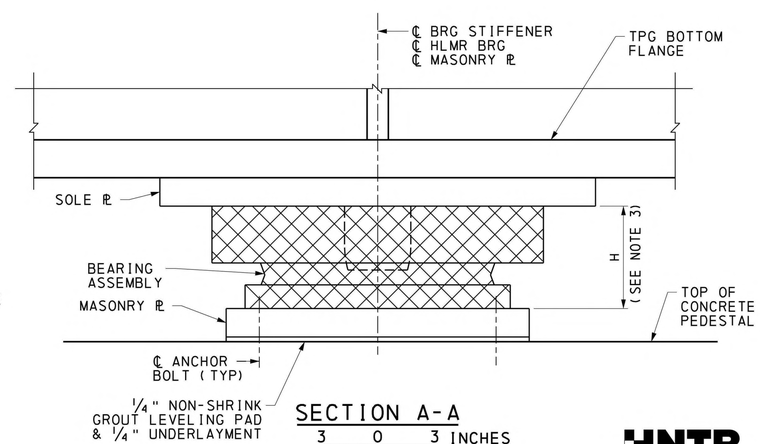

SECTION A-A

3 0 3 INCHES

LEGEND:

BEARING ASSEMBLY

Mark	Description	By	Chk'd	Recm'd	Date
REVISIONS					

MPMS/ECMS PROJ: 115877

HNTB

COMMONWEALTH OF PENNSYLVANIA
DEPARTMENT OF TRANSPORTATION

CLEARFIELD COUNTY
SR 1001 SECTION MTF
SEG 0132 OFFSET 0701
CR 65.60 (CRESSON BRANCH) STA 4+65.11
OVER SR 1001 (RIVER ROAD)
STEEL THROUGH PLATE GIRDER & STEEL THROUGH TRUSS BRIDGE

EXPANSION BEARING DETAILS 1 OF 3

COMMONWEALTH OF PENNSYLVANIA
REGISTERED PROFESSIONAL
ULYSSES C. KOUTSOGIANNIS
ENGINEER
PE073912

PREPARED BY:
HNTB CORPORATION
4507 NORTH FRONT STREET
SUITE 300
HARRISBURG, PA 17110

RECOMMENDED _____

SHEET 33 OF 54

S-1001RJC

2/12/2024
FILENAME: 77861-#013-s-br-brg02.dgn

DES: JAC	DES CKD: MDB	DWG: DAC	DWG CKD: JAC

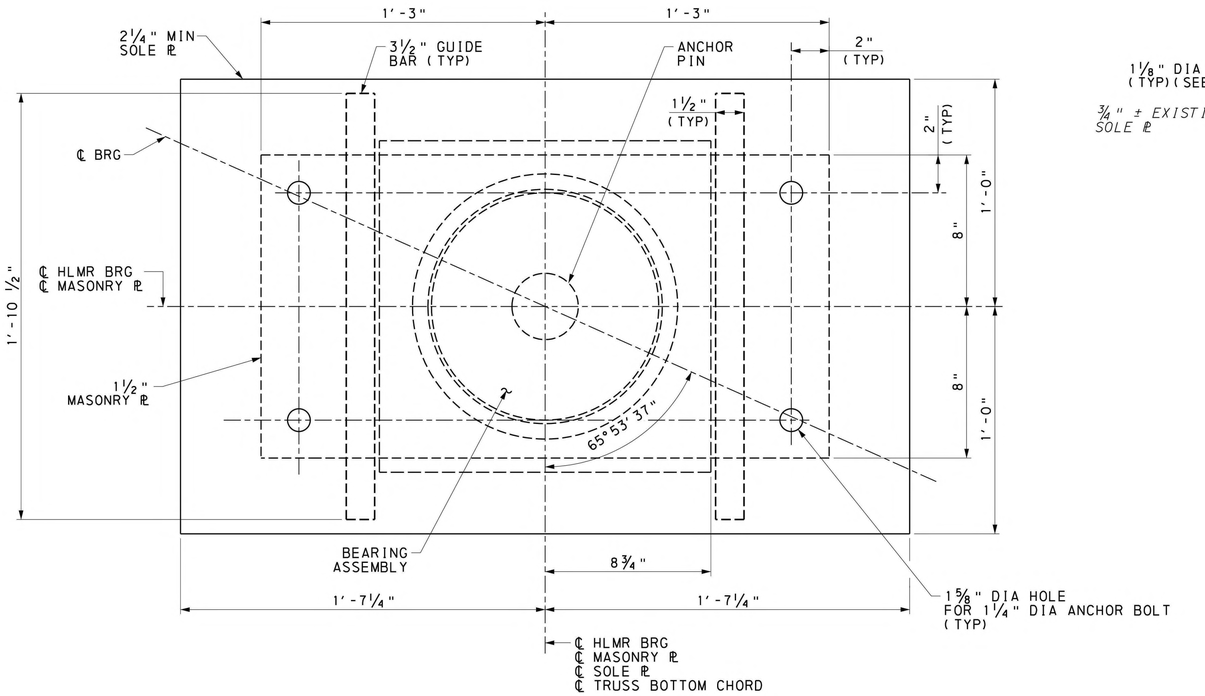

PLAN

3 0 3 INCHES

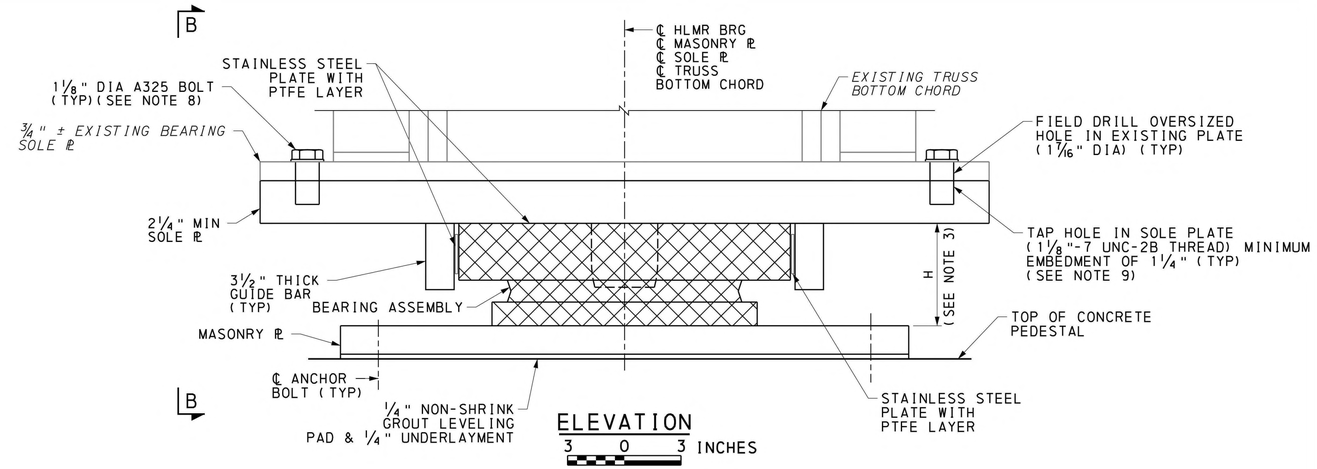

ELEVATION

3 0 3 INCHES

LEGEND:

BEARING ASSEMBLY

LIMITS OF REMOVAL

NOTES:

1. THIS SHEET APPLIES TO PIER 1, EXISTING SPAN 2 BEARINGS. FOR ADDITIONAL PIER 1, EXISTING SPAN 2 BEARING DETAILS AND NOTES, SEE SHEET 35.
2. FOR BEARING DESIGN DATA AND NOTES, SEE SHEET 32.
3. DIMENSION "H" IS ASSUMED TO BE 5.47" FOR PLAN DETAILS. CONTRACTOR SHALL ADJUST BEARING SEAT ELEVATION AND CONCRETE PEDESTAL HEIGHT FOR THE SUPPLIED BEARING ASSEMBLY.
4. BEARING DIMENSIONS SHOWN ARE BASED UPON PRELIMINARY BEARING MANUFACTURER DESIGN.
5. REPLACE THE EXISTING BEARINGS AT PIER 1, EXISTING SPAN 2. REMOVE EXISTING I-BEAM BOLSTER, ROLLER BEARING ASSEMBLY, AND ANCHOR BOLTS. THE EXISTING BEARING SOLE PLATE SHALL REMAIN.
6. FIELD VERIFY DIMENSIONS AND CONSTRUCTABILITY BEFORE FABRICATION OF THE BEARINGS.
7. THE CONTRACTOR MAY ELECT TO COMPLETE A STEEL COUPON TEST TO DETERMINE THE WELDABILITY OF THE EXISTING STEEL. IF THE EXISTING STEEL IS DETERMINED TO BE WELDABLE, A WELDED CONNECTION FROM THE PROPOSED BEARING TO EXISTING SUPERSTRUCTURE MAY BE SUBSTITUTED FOR THE BOLTED CONNECTION SHOWN UPON APPROVAL BY THE ENGINEER.
8. PROVIDE PRE-TENSION FORCE OF 56 KIPS PER A325 BOLT.
9. TAPPED HOLES IN SOLE PLATE SHALL BE NORMAL TO THE EXISTING BEARING SOLE PLATE.
10. THE COATING ON THE TOP OF THE SOLE PLATE IN CONTACT WITH THE EXISTING BEARING SOLE PLATE SHALL BE A CLASS B COATING IN ACCORDANCE WITH THE GENERAL NOTES.

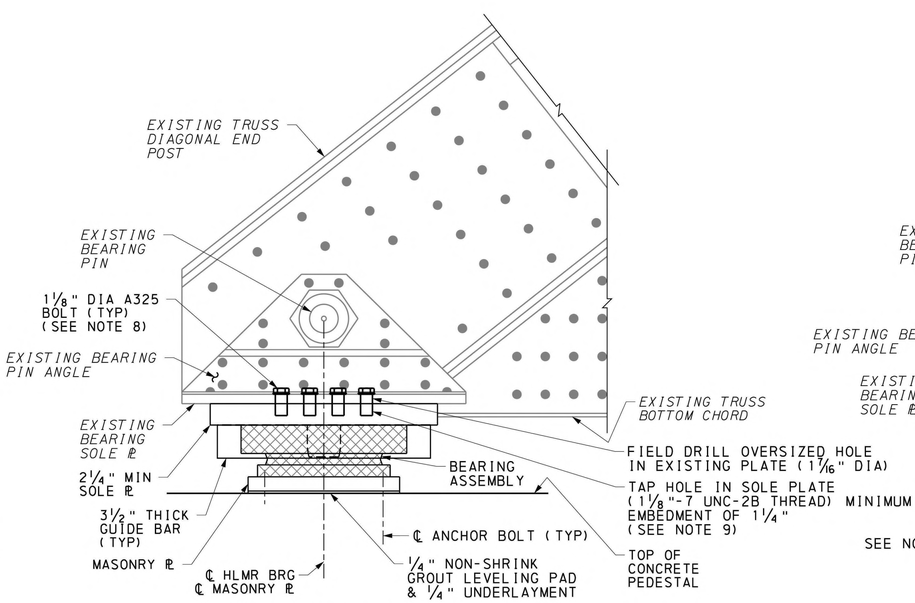

SECTION B-B

6 0 6 INCHES

(SOUTH ELEVATION SHOWN, NORTH SIMILAR)

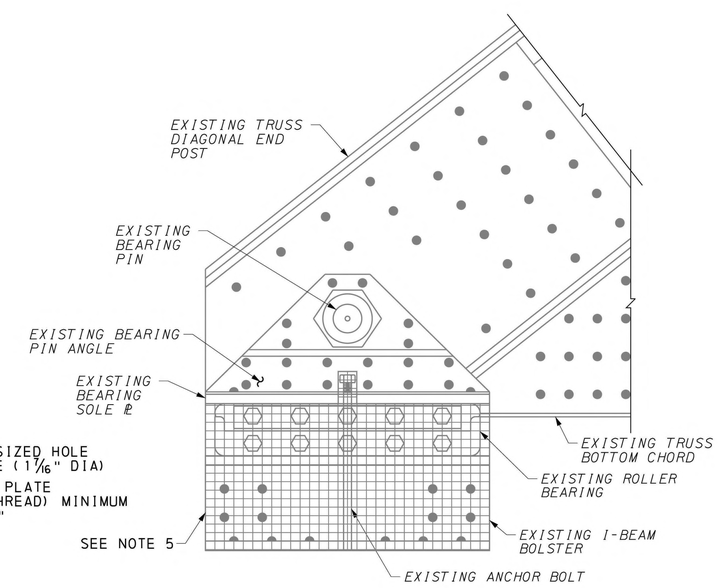

EXISTING BEARING ELEVATION

6 0 6 INCHES

(SOUTH ELEVATION SHOWN, NORTH SIMILAR)

Mark	Description	By	Chk'd	Recm'd	Date
	REVISIONS				

MPMS/ECMS PROJ: 115877

HNTB

COMMONWEALTH OF PENNSYLVANIA
REGISTERED PROFESSIONAL
ULYSSES C. KOUTSOGIANNIS
ENGINEER
PE073912

PREPARED BY:

HNTB CORPORATION
4507 NORTH FRONT STREET
SUITE 300
HARRISBURG, PA 17110

COMMONWEALTH OF PENNSYLVANIA
DEPARTMENT OF TRANSPORTATION

CLEARFIELD COUNTY
SR 1001 SECTION MTF
SEG 0132 OFFSET 0701
CR 65.60 (CRESSON BRANCH) STA 4+65.11
OVER SR 1001 (RIVER ROAD)
STEEL THROUGH PLATE GIRDER & STEEL THROUGH TRUSS BRIDGE

EXPANSION BEARING DETAILS 2 OF 3

RECOMMENDED _____

SHEET 34 OF 54

S-1001RJC

2/12/2024
FILENAME: 77861-W013-s-br-brg03.dgn

DES: JAC	DES CKD: DAK	DWG: DAC	DWG CKD: JAC

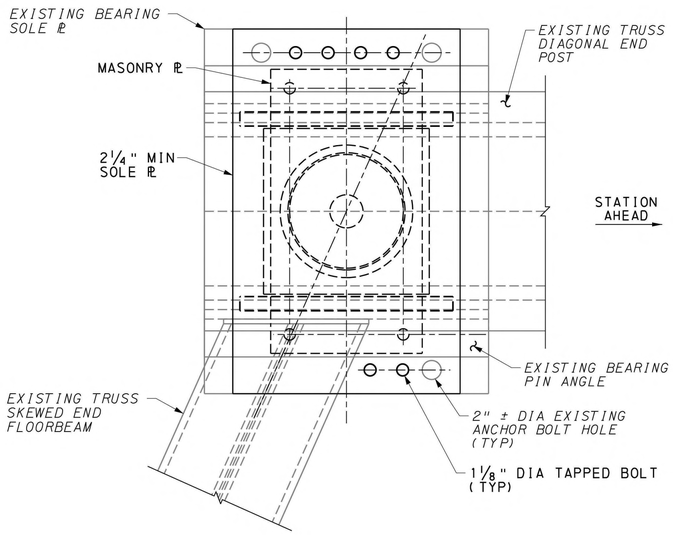

BEARING REPLACEMENT CONCEPT - NORTH PLAN

6 0 6 INCHES

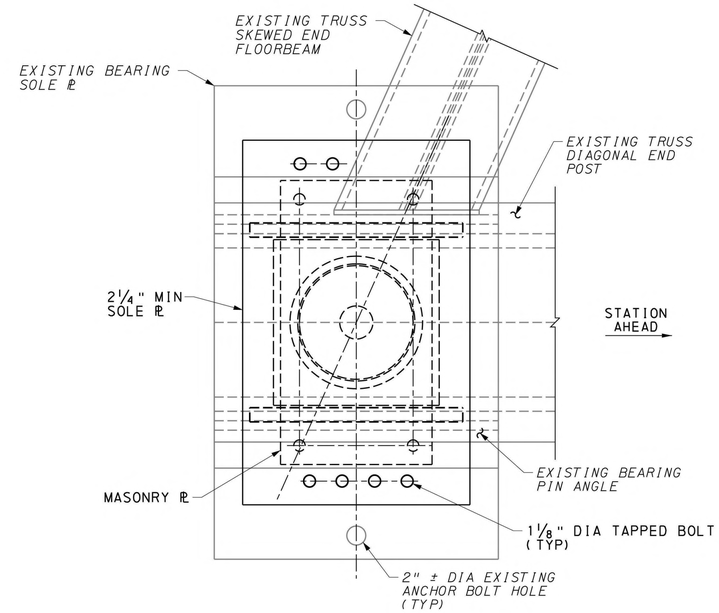

BEARING REPLACEMENT CONCEPT - SOUTH PLAN

6 0 6

INCHES

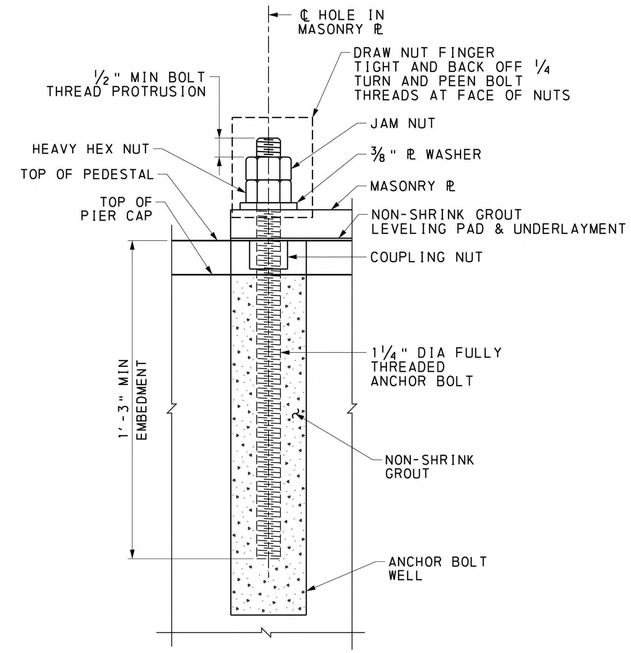

TYPICAL ANCHOR BOLT DETAIL

3 0 3 INCHES

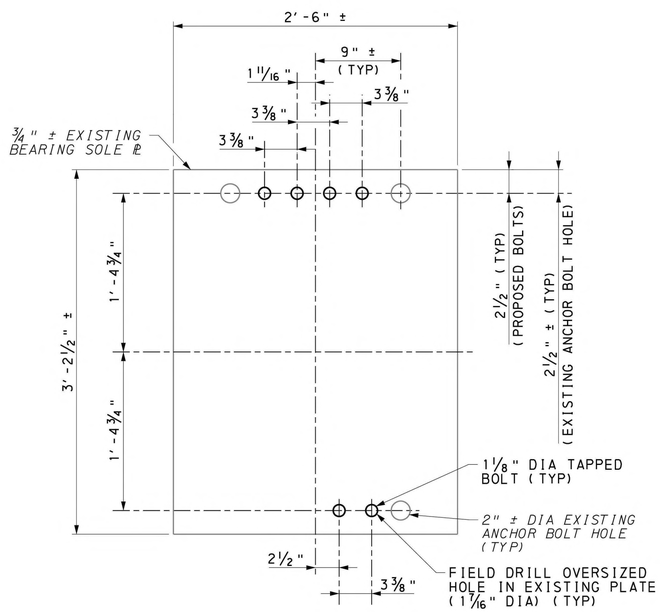

EXISTING BEARING SOLE PLATE - NORTH PLAN

6 0 6 INCHES

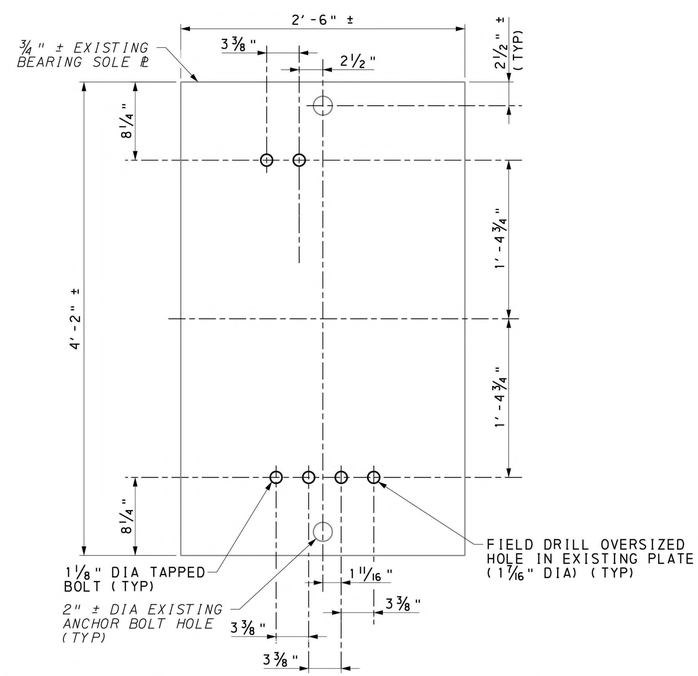

EXISTING BEARING SOLE PLATE - SOUTH PLAN

6 0 6 INCHES

NOTES:

1. THIS SHEET APPLIES TO PIER 1, EXISTING SPAN 2 BEARINGS. FOR ADDITIONAL PIER 1, EXISTING SPAN 2 BEARING DETAILS AND NOTES, SEE SHEET 34.
2. FOR BEARING DESIGN DATA AND NOTES, SEE SHEET 32.

Mark	Description	By	Chk'd	Recm'd	Date
REVISIONS					

MPMS/ECMS PROJ: 115877

HNTB

COMMONWEALTH OF PENNSYLVANIA
DEPARTMENT OF TRANSPORTATION

COMMONWEALTH OF PENNSYLVANIA REGISTERED PROFESSIONAL ULYSSES C. KOUTSOGIANNIS ENGINEER PE073912

CLEARFIELD COUNTY
SR 1001 SECTION MTF
SEG 0132 OFFSET 0701
CR 65.60 (CRESSON BRANCH) STA 4+65.11
OVER SR 1001 (RIVER ROAD)
STEEL THROUGH PLATE GIRDER & STEEL THROUGH TRUSS BRIDGE
EXPANSION BEARING DETAILS 3 OF 3

PREPARED BY:
HNTB CORPORATION
4507 NORTH FRONT STREET
SUITE 300
HARRISBURG, PA 17110

RECOMMENDED _____

SHEET 35 OF 54

S-1001RJC

2/12/2024
FILENAME: 77861-W013-s-br-brg04.dgn

DES: JAC	DES CKD: DAK	DWG: DAC	DWG CKD: JAC

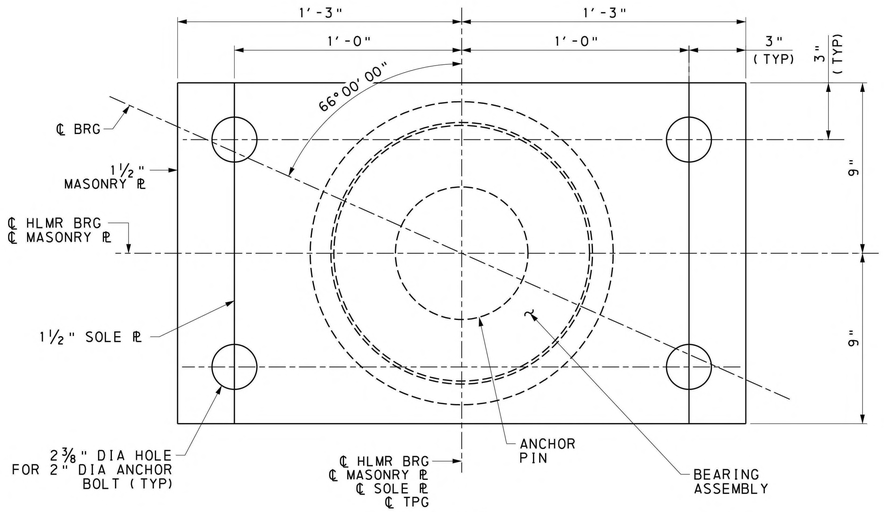

PLAN

3 0 3 INCHES

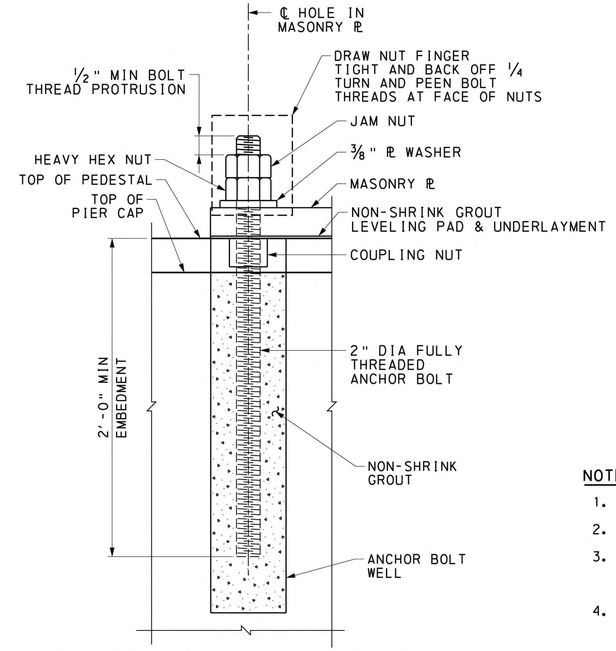

TYPICAL ANCHOR BOLT DETAIL

3 0 3 INCHES

NOTES:

1. THIS SHEET APPLIES TO PIER 1, PROPOSED SPAN 1 BEARINGS.
2. FOR BEARING DESIGN DATA AND NOTES, SEE SHEET 32.
3. DIMENSION "H" IS ASSUMED TO BE 6.72" FOR PLAN DETAILS. CONTRACTOR SHALL ADJUST BEARING SEAT ELEVATION AND CONCRETE PEDESTAL HEIGHT FOR THE SUPPLIED BEARING ASSEMBLY.
4. BEARING DIMENSIONS SHOWN ARE BASED UPON PRELIMINARY BEARING MANUFACTURER DESIGN.

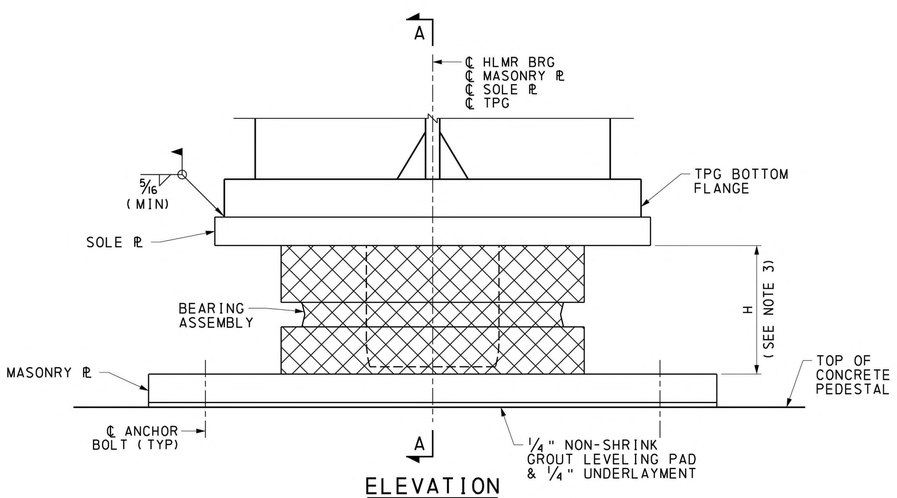

ELEVATION

3 0 3 INCHES

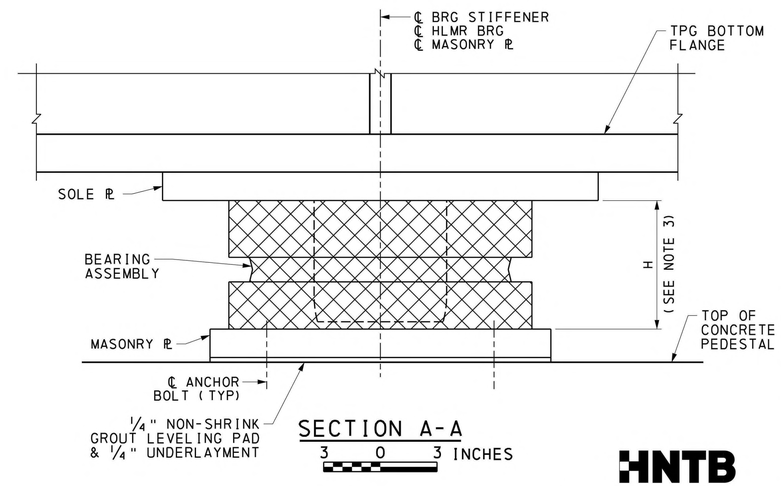

SECTION A-A

3 0 3 INCHES

LEGEND:

BEARING ASSEMBLY

Mark	Description	By	Chk'd	Recm'd	Date
REVISIONS					

MPMS/ECMS PROJ: 115877

HNTB

COMMONWEALTH OF PENNSYLVANIA
REGISTERED PROFESSIONAL
ULYSSES C. KOUTSOGIANNIS
ENGINEER
PE073912

COMMONWEALTH OF PENNSYLVANIA
DEPARTMENT OF TRANSPORTATION

CLEARFIELD COUNTY
SR 1001 SECTION MTF
SEG 0132 OFFSET 0701
CR 65.60 (CRESSON BRANCH) STA 4+65.11
OVER SR 1001 (RIVER ROAD)
STEEL THROUGH PLATE GIRDER & STEEL THROUGH TRUSS BRIDGE
FIXED BEARING DETAILS

PREPARED BY:
HNTB CORPORATION
4507 NORTH FRONT STREET
SUITE 300
HARRISBURG, PA 17110

RECOMMENDED _____

SHEET 36 OF 54

S-1001RJC

2/12/2024
FILENAME: 77861-M013-s-br-br-g05.dgn

DES: JAC	DES CKD: MDB	DWG: DAC	DWG CKD: JAC

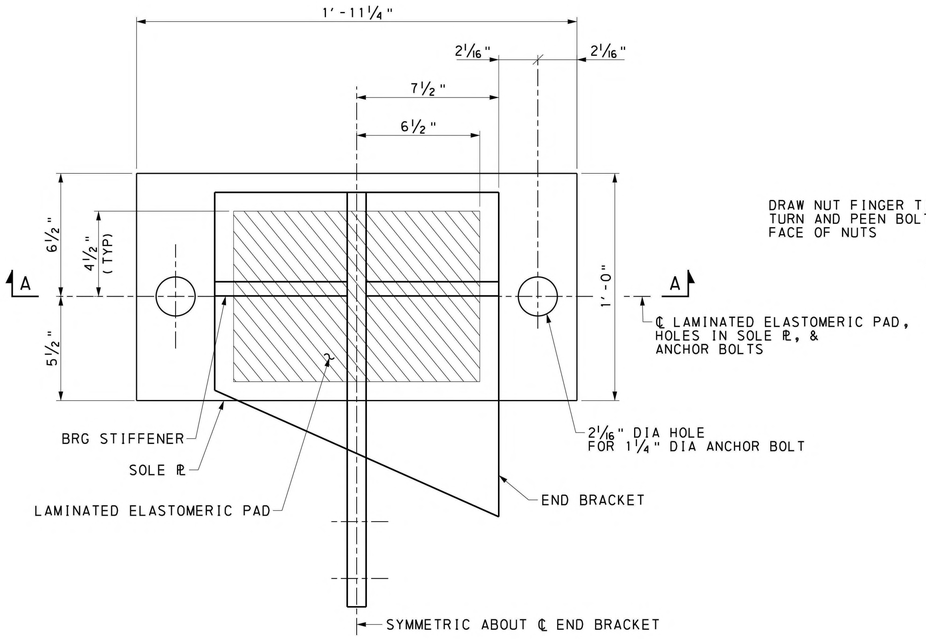

PLAN-END BRACKET BEARING

6 0 6 INCHES

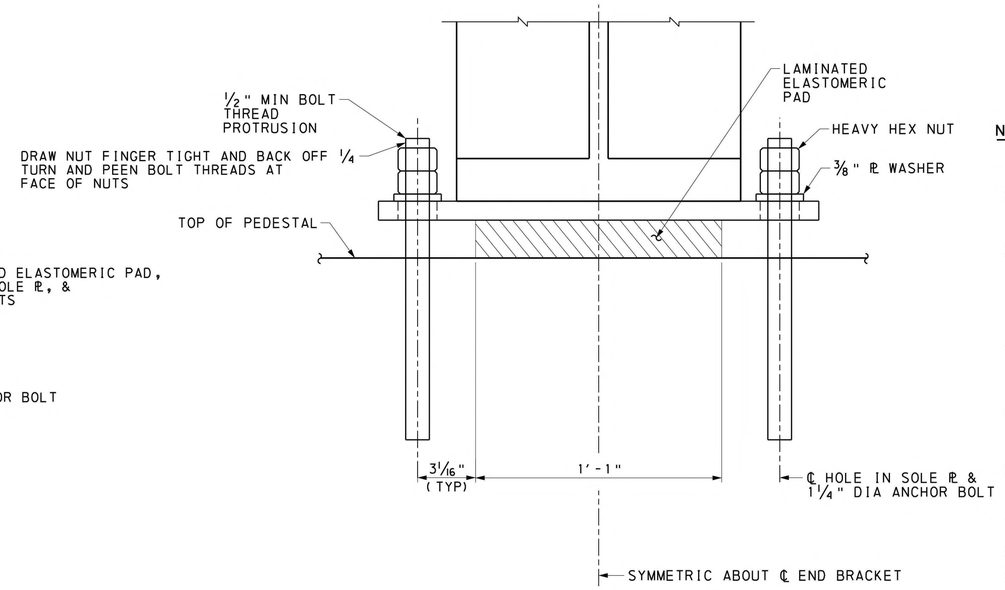

SECTION A-A

6 0 6 INCHES

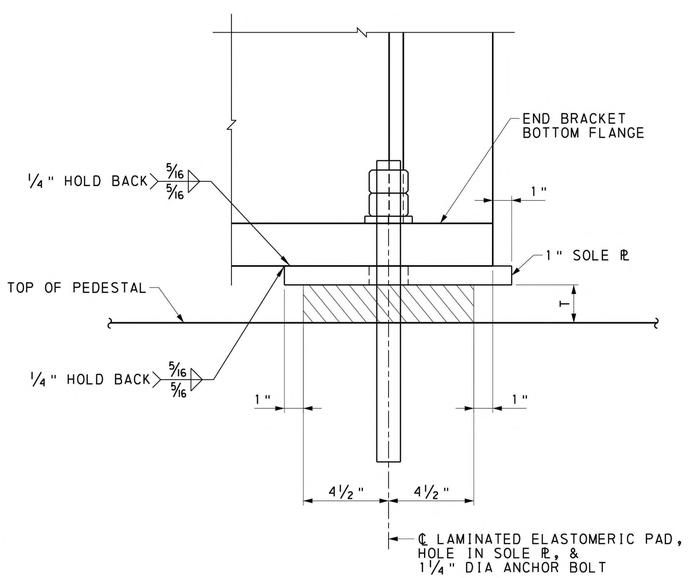

ELEVATION - END BRACKET BEARING

6 0 6 INCHES

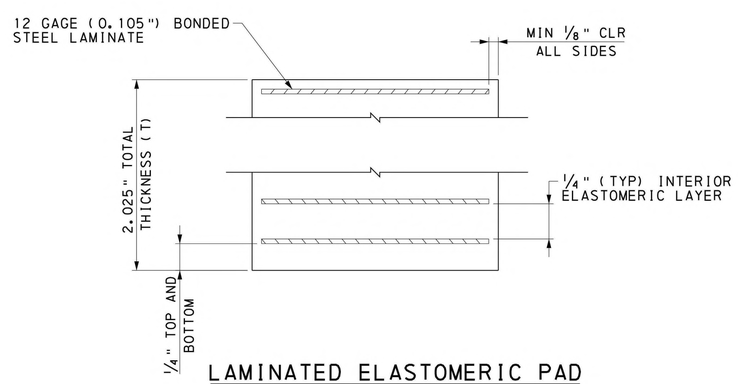

LAMINATED ELASTOMERIC PAD

6 0 6 INCHES

NOTES:

1. SEE SHEET 7 FOR ANCHOR BOLT WELL DETAIL AND NOTES. SEE SHEET 33 FOR TYPICAL ANCHOR BOLT DETAIL.
2. THE END BRACKET ELASTOMERIC BEARINGS SHALL BE MANUFACTURED, DELIVERED, AND STORED IN ACCORDANCE WITH AREMA MANUAL CHAPTER 15 SECTION 5.8 AND SECTION 5.12.
3. THE CONTRACTOR, IN COORDINATION WITH THE BEARING MANUFACTURER, SHALL SUBMIT DETAILED SHOP DRAWINGS BEFORE ANY FABRICATION OF ELASTOMERIC BEARINGS IS STARTED. THE MANUFACTURER SHALL NOTE ON THE SHOP DRAWINGS THE SHAPE FACTOR, EFFECTIVE ELASTOMER THICKNESS, COMPRESSIVE AREA, SHEAR AREA, WIDTH TO HEIGHT RATIO, AND LENGTH TO HEIGHT RATIO.
4. ALL BEARINGS SHALL BE MARKED PRIOR TO SHIPPING. THE MARKS SHALL INCLUDE THE BEARING LOCATION ON THE BRIDGE AND A DIRECTION ARROW THAT POINTS UP-STATION. ALL MARKS SHALL BE PERMANENT AND BE VISIBLE AFTER BEARING IS INSTALLED.
5. ALL MATERIALS SHALL BE ASTM A709, GRADE 50 EXCEPT AS NOTED OTHERWISE. STEEL REINFORCEMENT FOR LAMINATED ELASTOMERIC PADS SHALL BE ROLLED FROM MILD STEEL CONFORMING TO ASTM A1011, GRADE 36.
6. BEARINGS SHALL HAVE F1554 GRADE 105 ANCHOR BOLTS EXTENDED A MINIMUM OF 1'-3" INTO CONCRETE AND SHALL BE PROVIDED WITH WASHER AND HEAVY HEX NUT, ALL GALVANIZED IN ACCORDANCE WITH ASTM A153.
7. HARDENED WASHERS SHALL CONFORM TO ASTM F436.
8. HEAVY HEX NUTS SHALL CONFORM TO ASTM A563.
9. ALL SUBSTRUCTURE REINFORCING SHALL BE POSITIONED TO CLEAR THE ANCHOR BOLT WELLS.
10. THE SIZE OF FILLET WELDS FROM THE END BRACKET TO THE SOLE PLATE IS 5⁄16".
11. DO NOT POUR THE CONCRETE PEDESTAL SEATS UNTIL THE BEARING SHOP DRAWINGS ARE APPROVED.
12. SUBSTRUCTURE BEARING SURFACES SHALL BE LEVEL, SMOOTH, AND FINISHED TO THE ELEVATION NOTED ON THE PLANS.
13. THE TEMPERATURE OF THE STEEL PLATE IN CONTACT WITH THE ELASTOMER SHALL NOT EXCEED 400 DEGREES F DURING THE WELDING PROCESS.
14. ALL BEARING PADS ARE TO BE MOLDED TO DESIGN DIMENSIONS. CUTTING TO SIZE AFTER FABRICATION IS PROHIBITED.
15. PROVIDE NEOPRENE 60 ±5 DUROMETER WITH MATERIAL PROPERTIES PER AREMA TABLE 15-5-5.
16. PAINT THE SOLE PLATE IN ACCORDANCE WITH PUBLICATION 408, SECTION 1060. THE FINISH PAINT COAT IS TO MATCH THE COLOR OF THE EXISTING ADJACENT TRUSS TO REMAIN.
17. PREPARE BEARING AREAS AS SPECIFIED IN PUBLICATION 408, SECTION 1001.3(K)9.
18. THE END BRACKET BEARING UNFACTORED VERTICAL DESIGN REACTIONS ARE AS FOLLOWS: D=0.7 KIPS, L+I=80 KIPS, TOTAL=80.7 KIPS.

Mark	Description	By	Chk'd	Recm'd	Date
REVISIONS					

MPMS/ECMS PROJ: 115877

HNTB

COMMONWEALTH OF PENNSYLVANIA
DEPARTMENT OF TRANSPORTATION

COMMONWEALTH OF PENNSYLVANIA REGISTERED PROFESSIONAL ULYSSES C. KOUTSOGIANNIS ENGINEER PE073912

CLEARFIELD COUNTY
SR 1001 SECTION MTF
SEG 0132 OFFSET 0701
CR 65.60 (CRESSON BRANCH) STA 4+65.11
OVER SR 1001 (RIVER ROAD)
STEEL THROUGH PLATE GIRDER & STEEL THROUGH TRUSS BRIDGE
END BRACKET BEARING DETAILS

PREPARED BY:
HNTB CORPORATION
4507 NORTH FRONT STREET
SUITE 300
HARRISBURG, PA 17110

RECOMMENDED _____

SHEET 37 OF 54

S-1001RJC

2/12/2024
FILENAME: 17861-W013-s-br-brg06.dgn

DES: DAK	DES CKD: JAC	DWG: DAC	DWG CKD: DAK

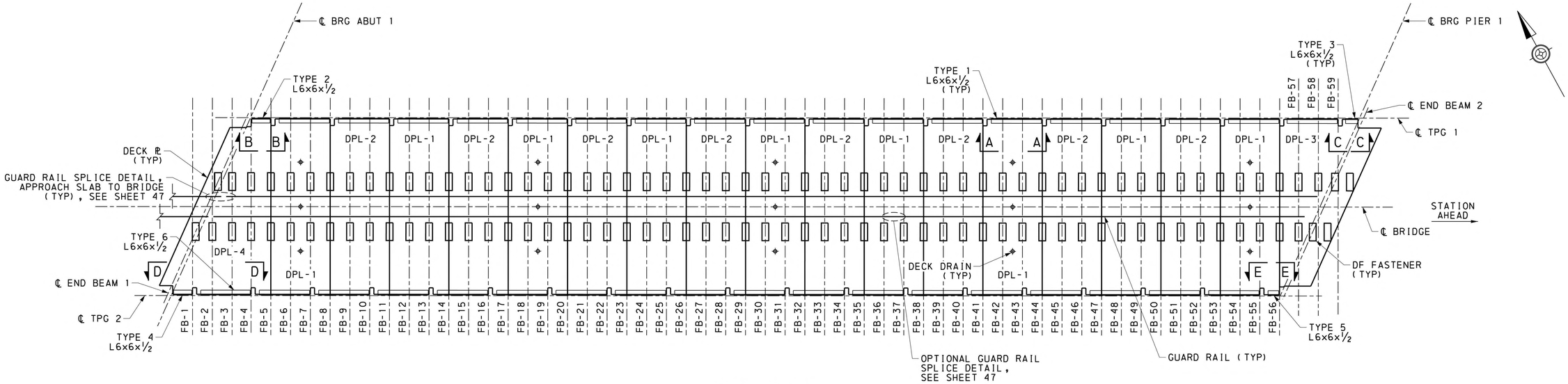

DECK PLAN

2 0 2 4 6 FEET

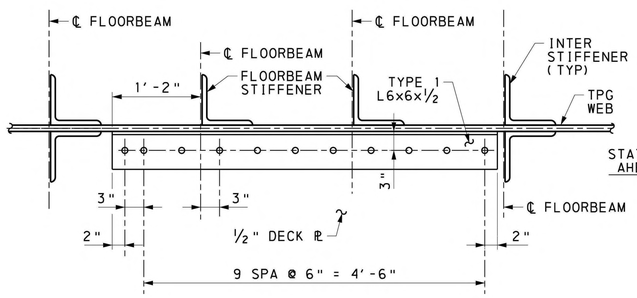

SECTION F-F

6 0 6 12 INCHES

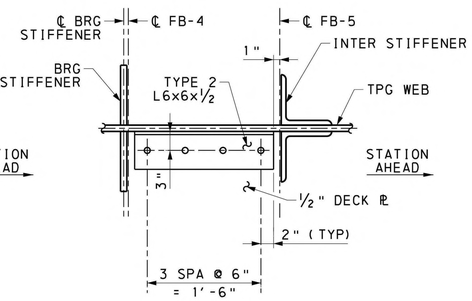

SECTION G-G

6 0 6 12 INCHES

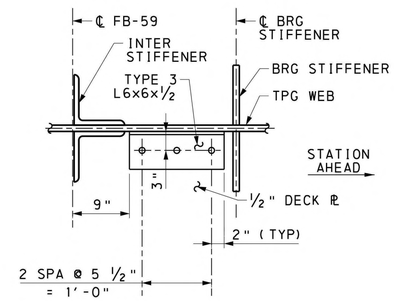

SECTION H-H

6 0 6 12 INCHES

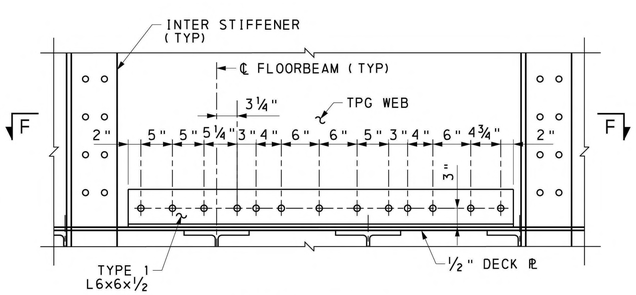

SECTION A-A

6 0 6 12 INCHES

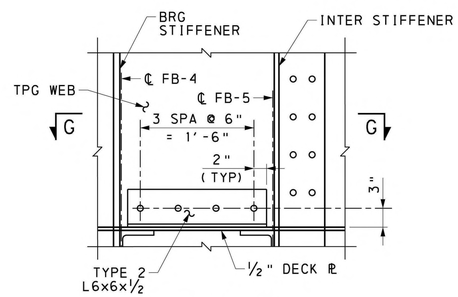

SECTION B-B

6 0 6 12 INCHES

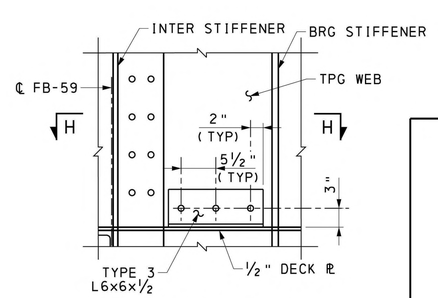

SECTION C-C

6 0 6 12 INCHES

NOTES:

1. FOR STAKE-OUT PLAN, SEE SHEET 6.
2. FOR FRAMING PLAN & GIRDER ELEVATION, SEE SHEET 15.
3. FOR GIRDER & FRAMING DETAILS, SEE SHEETS 16-31.
4. DECK PLAN DOES NOT SHOW BOLT HOLES FOR CLARITY.
5. FOR GUARD RAIL DETAILS, SEE SHEET 47.

Mark	Description	By	Chk'd	Recm'd	Date
REVISIONS					

MPMS/ECMS PROJ: 115877

HNTB

COMMONWEALTH OF PENNSYLVANIA REGISTERED PROFESSIONAL ULYSSES C. KOUTSOGIANNIS ENGINEER PE073912

PREPARED BY:
HNTB CORPORATION
4507 NORTH FRONT STREET
SUITE 300
HARRISBURG, PA 17110

COMMONWEALTH OF PENNSYLVANIA
DEPARTMENT OF TRANSPORTATION

CLEARFIELD COUNTY
SR 1001 SECTION MTF
SEG 0132 OFFSET 0701
CR 65.60 (CRESSON BRANCH) STA 4+65.11
OVER SR 1001 (RIVER ROAD)
STEEL THROUGH PLATE GIRDER & STEEL THROUGH TRUSS BRIDGE

DECK PLAN & DETAILS 1 OF 5

RECOMMENDED _____

SHEET 38 OF 54

S-1001RJC

2/12/2024
FILENAME: 77861-W013-s-br-dek01.dgn

DES: JAC	DES CKD: MDB	DWG: DAC	DWG CKD: JAC

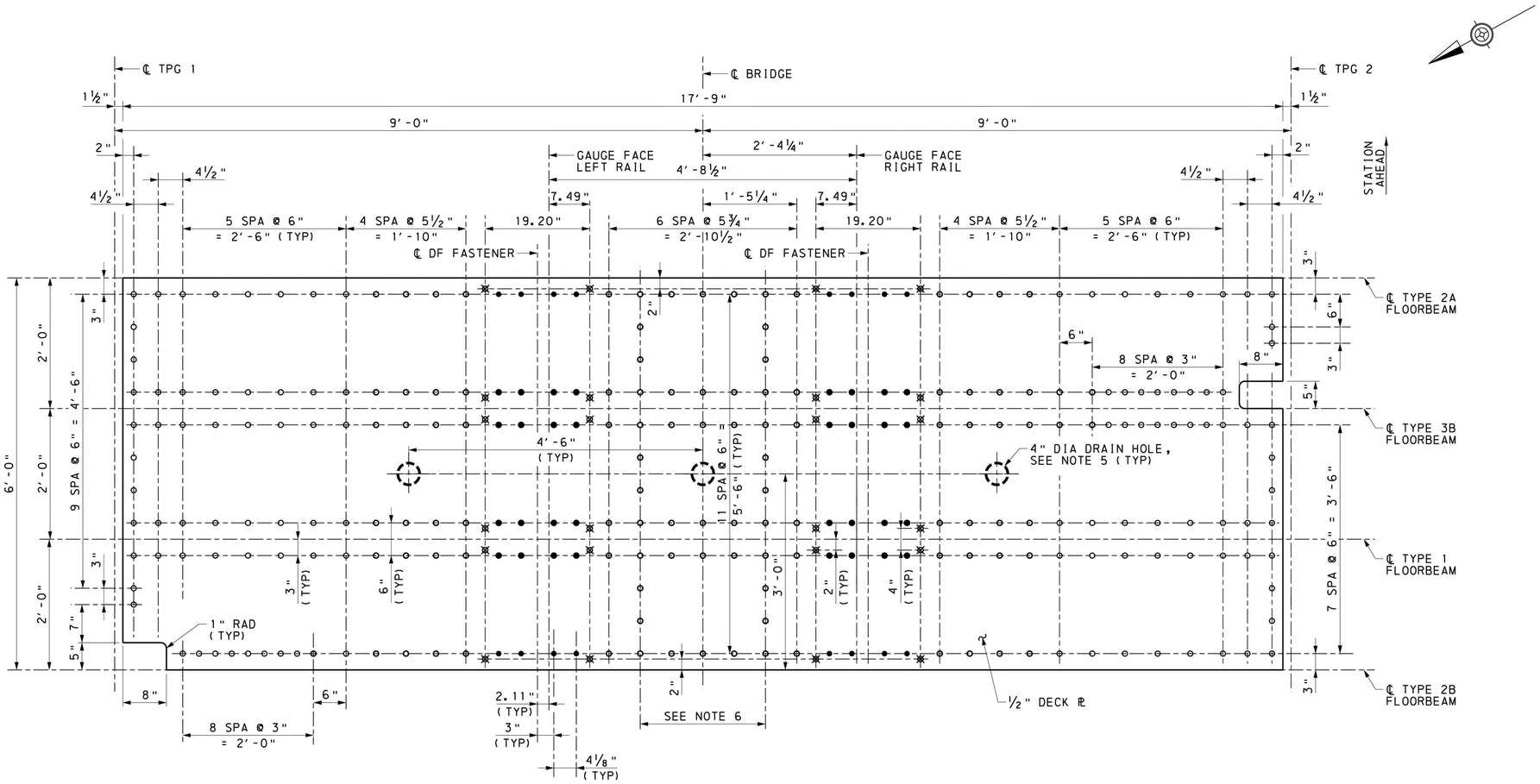

DECK PLATE DPL-1 PLAN

6 0 6 12 INCHES

NOTES:

1. FOR STAKE-OUT PLAN, SEE SHEET 6.
2. FOR FRAMING PLAN & GIRDER ELEVATION, SEE SHEET 15.
3. FOR GIRDER & FRAMING DETAILS, SEE SHEETS 16-31.
4. FOR DECK PLAN, SEE SHEET 38.
5. DRAIN HOLES SHALL BE PLACED BETWEEN FLOORBEAMS FB 6 & FB 7, FB 18 & FB 19, FB 30 & FB 31, FB 42 & FB 43, FB 54 & FB 55.
6. BOLTS SHALL BE USED TO FASTEN GUARD RAIL TO STRUCTURE. FOR GUARD RAIL DETAILS, SEE SHEET 47.

LEGEND:

ALL BOLTS A325 UNLESS NOTED OTHERWISE

- ○ HEX HEAD BOLT
- ● COUNTERSUNK BOLT
- ⊗ DIRECT FIXATION FASTENER BOLT

Mark	Description	By	Chk'd	Recm'd	Date
REVISIONS					

MPMS/ECMS PROJ: 115877

HNTB

COMMONWEALTH OF PENNSYLVANIA
DEPARTMENT OF TRANSPORTATION

COMMONWEALTH OF PENNSYLVANIA REGISTERED PROFESSIONAL ULYSSES C. KOUTSOGIANNIS ENGINEER PE073912

CLEARFIELD COUNTY
SR 1001 SECTION MTF
SEG 0132 OFFSET 0701
CR 65.60 (CRESSON BRANCH) STA 4+65.11
OVER SR 1001 (RIVER ROAD)
STEEL THROUGH PLATE GIRDER & STEEL THROUGH TRUSS BRIDGE
DECK PLAN & DETAILS 2 OF 5

PREPARED BY:
HNTB CORPORATION
4507 NORTH FRONT STREET
SUITE 300
HARRISBURG, PA 17110

RECOMMENDED _____

SHEET 39 OF 54

S-1001RJC

2/12/2024
FILENAME: 77861-W013-s-br-dek02.dgn

DES: JAC	DES CKD: MDB	DWG: DAC	DWG CKD: JAC

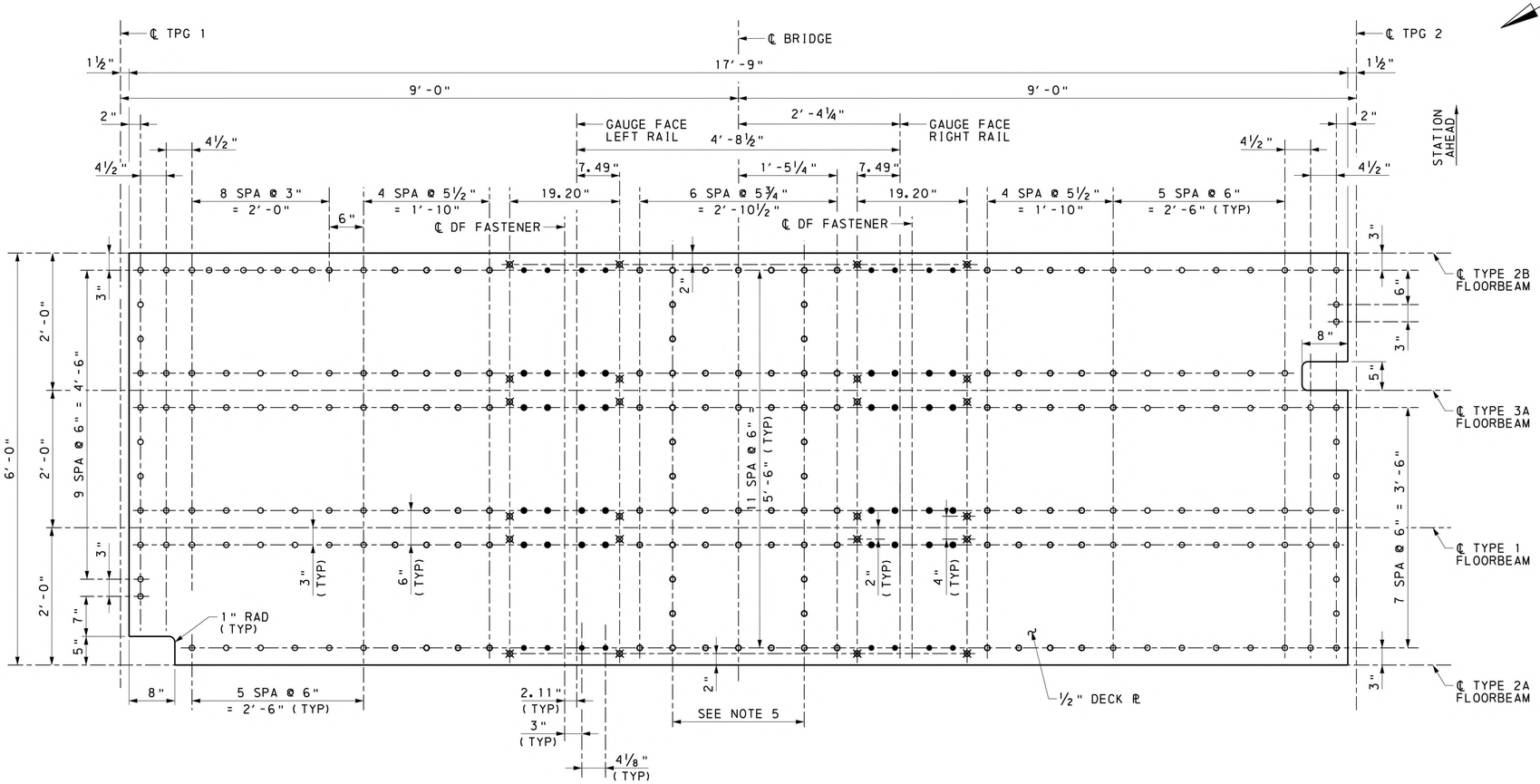

DECK PLATE DPL-2 PLAN

6 0 6 12 INCHES

NOTES:

1. FOR STAKE-OUT PLAN, SEE SHEET 6.
2. FOR FRAMING PLAN & GIRDER ELEVATION, SEE SHEET 15.
3. FOR GIRDER & FRAMING DETAILS, SEE SHEETS 16-31.
4. FOR DECK PLAN, SEE SHEET 38.
5. BOLTS SHALL BE USED TO FASTEN GUARD RAIL TO STRUCTURE. FOR GUARD RAIL DETAILS, SEE SHEET 47.

LEGEND:

ALL BOLTS A325 UNLESS NOTED OTHERWISE

- o HEX HEAD BOLT
- ● COUNTERSUNK BOLT
- ⊗ DIRECT FIXATION FASTENER BOLT

Mark	Description	By	Chk'd	Recm'd	Date
REVISIONS					

MPMS/ECMS PROJ: 115877

HNTB

COMMONWEALTH OF PENNSYLVANIA
DEPARTMENT OF TRANSPORTATION

COMMONWEALTH OF PENNSYLVANIA REGISTERED PROFESSIONAL ULYSSES C. KOUTSOGIANNIS ENGINEER PE073912

CLEARFIELD COUNTY
SR 1001 SECTION MTF
SEG 0132 OFFSET 0701
CR 65.60 (CRESSON BRANCH) STA 4+65.11
OVER SR 1001 (RIVER ROAD)
STEEL THROUGH PLATE GIRDER & STEEL THROUGH TRUSS BRIDGE
DECK PLAN & DETAILS 3 OF 5

PREPARED BY:
HNTB CORPORATION
4507 NORTH FRONT STREET
SUITE 300
HARRISBURG, PA 17110

RECOMMENDED _____

SHEET 40 OF 54

S-1001RJC

DES: JAC	DES CKD: MDB	DWG: DAC	DWG CKD: JAC

2/12/2024
FILENAME: 77861-M013-s-br-dek03.dgn

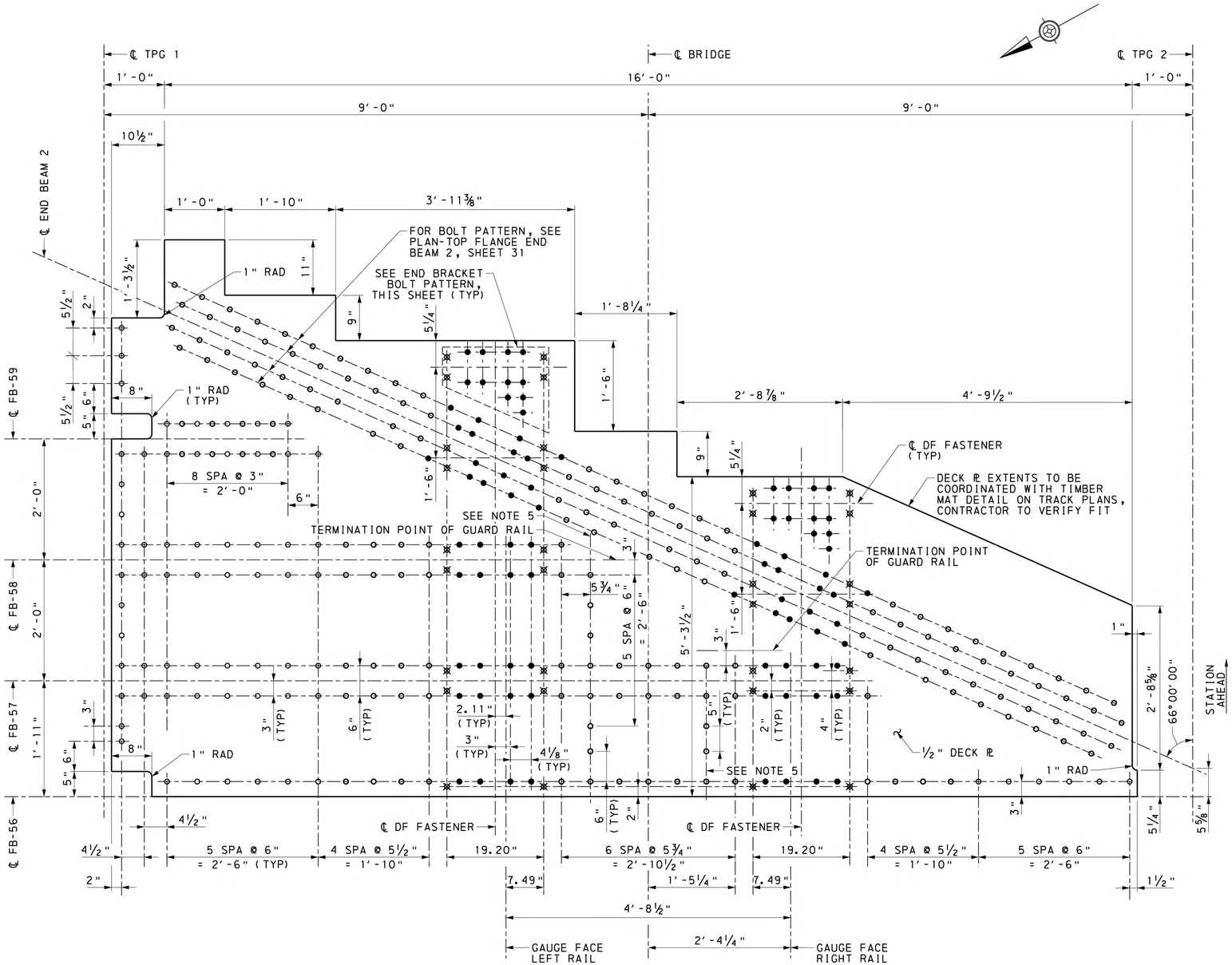

DECK PLATE DPL-3 PLAN

6 0 6 12 INCHES

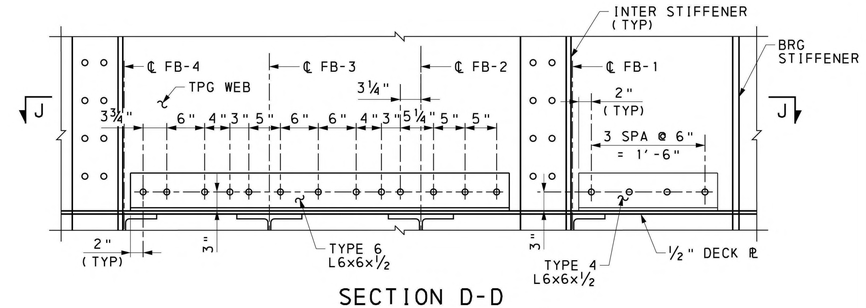

SECTION D-D

6 0 6 12 INCHES

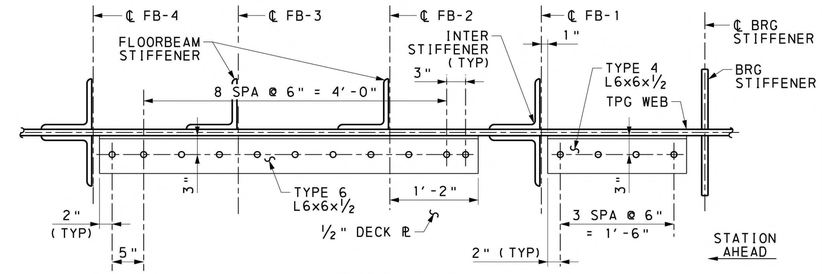

SECTION J-J

6 0 6 12 INCHES

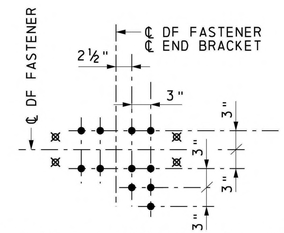

END BRACKET BOLT PATTERN

6 0 6 12 INCHES

Mark	Description	By	Chk'd	Recm'd	Date

REVISIONS

MPMS/ECMS PROJ: 115877

LEGEND:

ALL BOLTS A325 UNLESS NOTED OTHERWISE

- ○ HEX HEAD BOLT
- ● COUNTERSUNK BOLT
- ⊠ DIRECT FIXATION FASTENER BOLT

NOTES:

1. FOR STAKE-OUT PLAN, SEE SHEET 6.
2. FOR FRAMING PLAN & GIRDER ELEVATION, SEE SHEET 15.
3. FOR GIRDER & FRAMING DETAILS, SEE SHEETS 16-31.
4. FOR DECK PLAN, SEE SHEET 38.
5. BOLTS SHALL BE USED TO FASTEN GUARD RAIL TO STRUCTURE. FOR GUARD RAIL DETAILS, SEE SHEET 47.

HNTB

COMMONWEALTH OF PENNSYLVANIA
DEPARTMENT OF TRANSPORTATION

COMMONWEALTH OF PENNSYLVANIA REGISTERED PROFESSIONAL ULYSSES C. KOUTSOGIANNIS ENGINEER PE073912

CLEARFIELD COUNTY
SR 1001 SECTION MTF
SEG 0132 OFFSET 0701
CR 65.60 (CRESSON BRANCH) STA 4+65.11
OVER SR 1001 (RIVER ROAD)
STEEL THROUGH PLATE GIRDER & STEEL THROUGH TRUSS BRIDGE

DECK PLAN & DETAILS 4 OF 5

PREPARED BY:
HNTB CORPORATION
4507 NORTH FRONT STREET
SUITE 300
HARRISBURG, PA 17110

RECOMMENDED _____

SHEET 41 OF 54

S-1001RJC

2/12/2024
FILENAME: 77861-W013-s-br-dek04.dgn

DES: JAC	DES CKD: MDB	DWG: DAC	DWG CKD: JAC

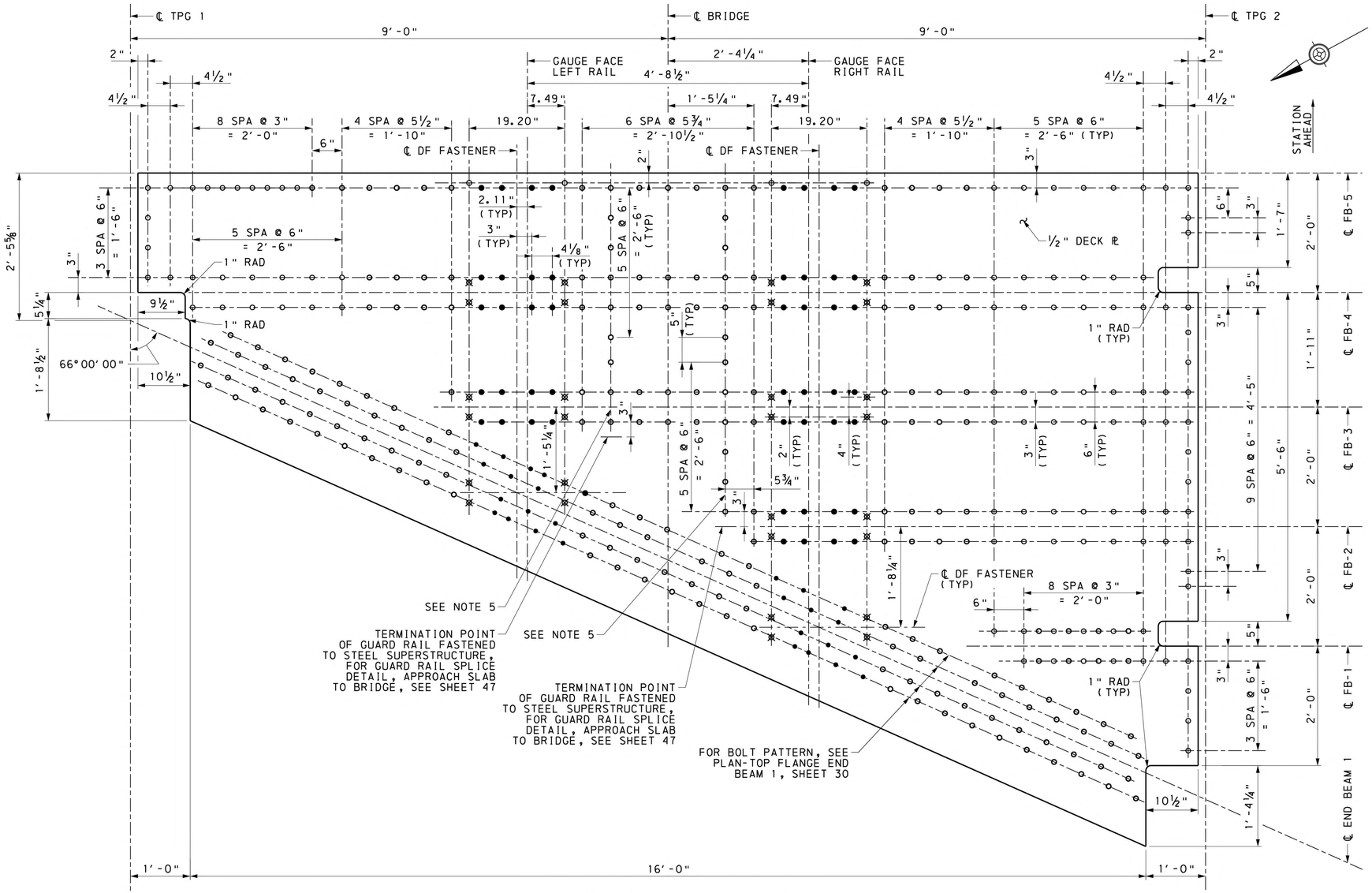

DECK PLATE DPL-4 PLAN

6 0 6 12 INCHES

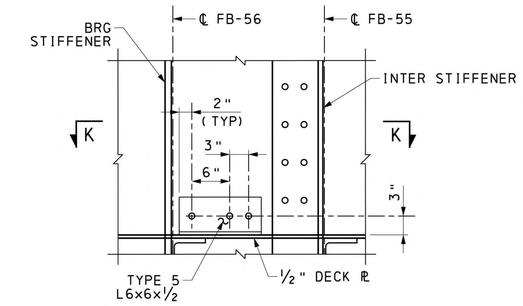

SECTION E-E

6 0 6 12 INCHES

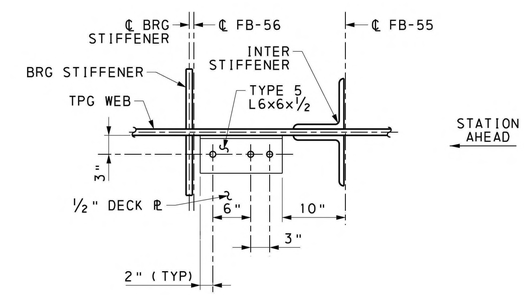

SECTION K-K

6 0 6 12 INCHES

Mark	Description	By	Chk'd	Recm'd	Date

REVISIONS

MPMS/ECMS PROJ: 115877

LEGEND:

ALL BOLTS A325 UNLESS NOTED OTHERWISE

- ○ HEX HEAD BOLT
- ● COUNTERSUNK BOLT
- ⊠ DIRECT FIXATION FASTENER BOLT

NOTES:

1. FOR STAKE-OUT PLAN, SEE SHEET 6.
2. FOR FRAMING PLAN & GIRDER ELEVATION, SEE SHEET 15.
3. FOR GIRDER & FRAMING DETAILS, SEE SHEETS 16-31.
4. FOR DECK PLAN, SEE SHEET 38.
5. BOLTS SHALL BE USED TO FASTEN GUARD RAIL TO STRUCTURE. FOR GUARD RAIL DETAILS, SEE SHEET 47.

HNTB

COMMONWEALTH OF PENNSYLVANIA REGISTERED PROFESSIONAL ULYSSES C. KOUTSOGIANNIS ENGINEER PE073912

PREPARED BY:
HNTB CORPORATION
4507 NORTH FRONT STREET
SUITE 300
HARRISBURG, PA 17110

COMMONWEALTH OF PENNSYLVANIA
DEPARTMENT OF TRANSPORTATION

CLEARFIELD COUNTY
SR 1001 SECTION MTF
SEG 0132 OFFSET 0701
CR 65.60 (CRESSON BRANCH) STA 4+65.11
OVER SR 1001 (RIVER ROAD)
STEEL THROUGH PLATE GIRDER & STEEL THROUGH TRUSS BRIDGE
DECK PLAN & DETAILS 5 OF 5

RECOMMENDED _____

SHEET 42 OF 54

S-1001RJC

2/12/2024
FILENAME: 77861-W013-s-br-dek05.dgn

DES: JAC	DES CKD: MDB	DWG: DAC	DWG CKD: JAC

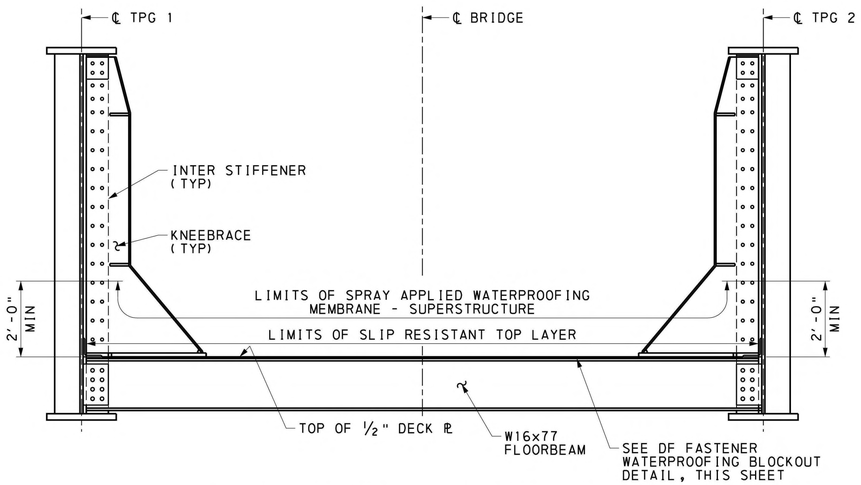

WATERPROOFING MEMBRANE DETAIL

1 0 1 2 FEET

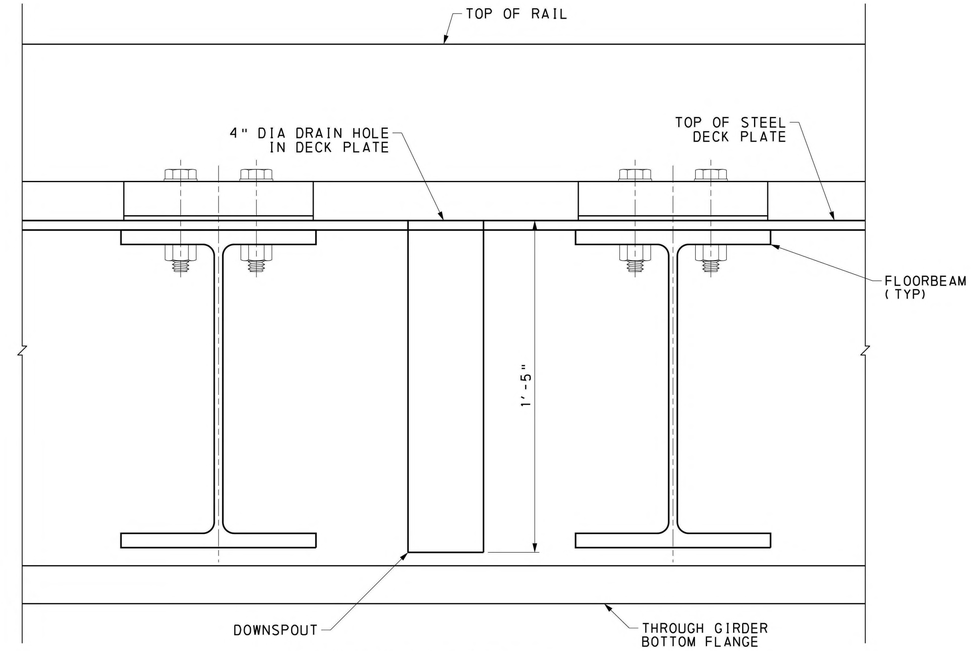

DRAINAGE DETAIL

3 0 3 INCHES

3"=1'-0"

DRAINAGE DETAIL NOTES:

1. DOWNSPOUTS SHALL NOT EXTEND LOWER THAN THE TOP OF THE THROUGH GIRDER BOTTOM FLANGE.
2. THE CONNECTION OF THE DOWNSPOUT TO THE STEEL DECK PLATE SHALL PROMOTE A POSITIVE DRAINAGE PATH THROUGH THE DOWNSPOUT. THE CONNECTION OF THE DOWNSPOUT SHALL BE APPROVED BEFORE FABRICATION OF THE STEEL DECK PLATE AND THE DOWNSPOUT.

NOTES:

1. FOR DECK PLAN & DETAILS, SEE SHEETS 38-42.
2. THE WATERPROOFING MEMBRANE SHALL HAVE A TOP LAYER THAT IS SLIP RESISTANT. THIS TOP LAYER IS INCLUDED WITHIN THE SPRAY APPLIED WATERPROOFING MEMBRANE - SUPERSTRUCTURE ITEM.

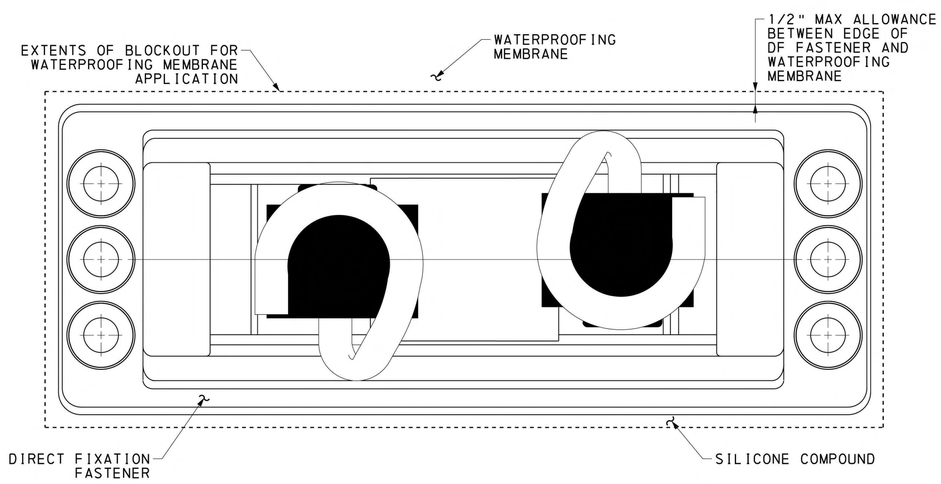

DF FASTENER WATERPROOFING BLOCKOUT DETAIL

6 0 6 12 INCHES

1"=1'-0"

DF FASTENER WATERPROOFING BLOCKOUT NOTES:

1. FOR WATERPROOFING MEMBRANE APPLICATION, THE AREA UNDER & AROUND WHERE THE DIRECT FIXATION FASTENER WILL AFFIX TO THE STEEL DECK SHALL BE BLOCKED OUT TO PREVENT THE WATERPROOFING MEMBRANE FROM BEING APPLIED UNDER THE FASTENER. IF WATERPROOFING MEMBRANE IS APPLIED WITHIN THE BLOCKOUT REGION, IT SHALL BE REMOVED AND THE STEEL DECK PLATE SHALL BE CLEANED.
2. SEE WATERPROOFING BLOCKOUT DETAIL FOR MAX ALLOWANCE FROM EDGE OF DIRECT FIXATION FASTENER TO EDGE OF WATERPROOFING MEMBRANE.
3. AFTER INSTALLATION OF THE DIRECT FIXATION FASTENER, THE AREA BETWEEN THE FASTENER AND THE WATERPROOFING MEMBRANE SHALL BE MADE WATER TIGHT WITH A SILICONE COMPOUND.

Mark	Description	By	Chk'd	Recm'd	Date
REVISIONS					

MPMS/ECMS PROJ: 115877

HNTB

COMMONWEALTH OF PENNSYLVANIA REGISTERED PROFESSIONAL ULYSSES C. KOUTSOGIANNIS ENGINEER PE073912

COMMONWEALTH OF PENNSYLVANIA
DEPARTMENT OF TRANSPORTATION

CLEARFIELD COUNTY
SR 1001 SECTION MTF
SEG 0132 OFFSET 0701
CR 65.60 (CRESSON BRANCH) STA 4+65.11
OVER SR 1001 (RIVER ROAD)
STEEL THROUGH PLATE GIRDER & STEEL THROUGH TRUSS BRIDGE
DECK WATERPROOFING & DRAINAGE

PREPARED BY:
HNTB CORPORATION
4507 NORTH FRONT STREET
SUITE 300
HARRISBURG, PA 17110

RECOMMENDED _____

SHEET 43 OF 54

S-1001RJC

2/12/2024
FILENAME: 77861-W013-s-br-dek06.dgn

DES: JAC	DES CKD: UCK	DWG: JTM	DWG CKD: JAC

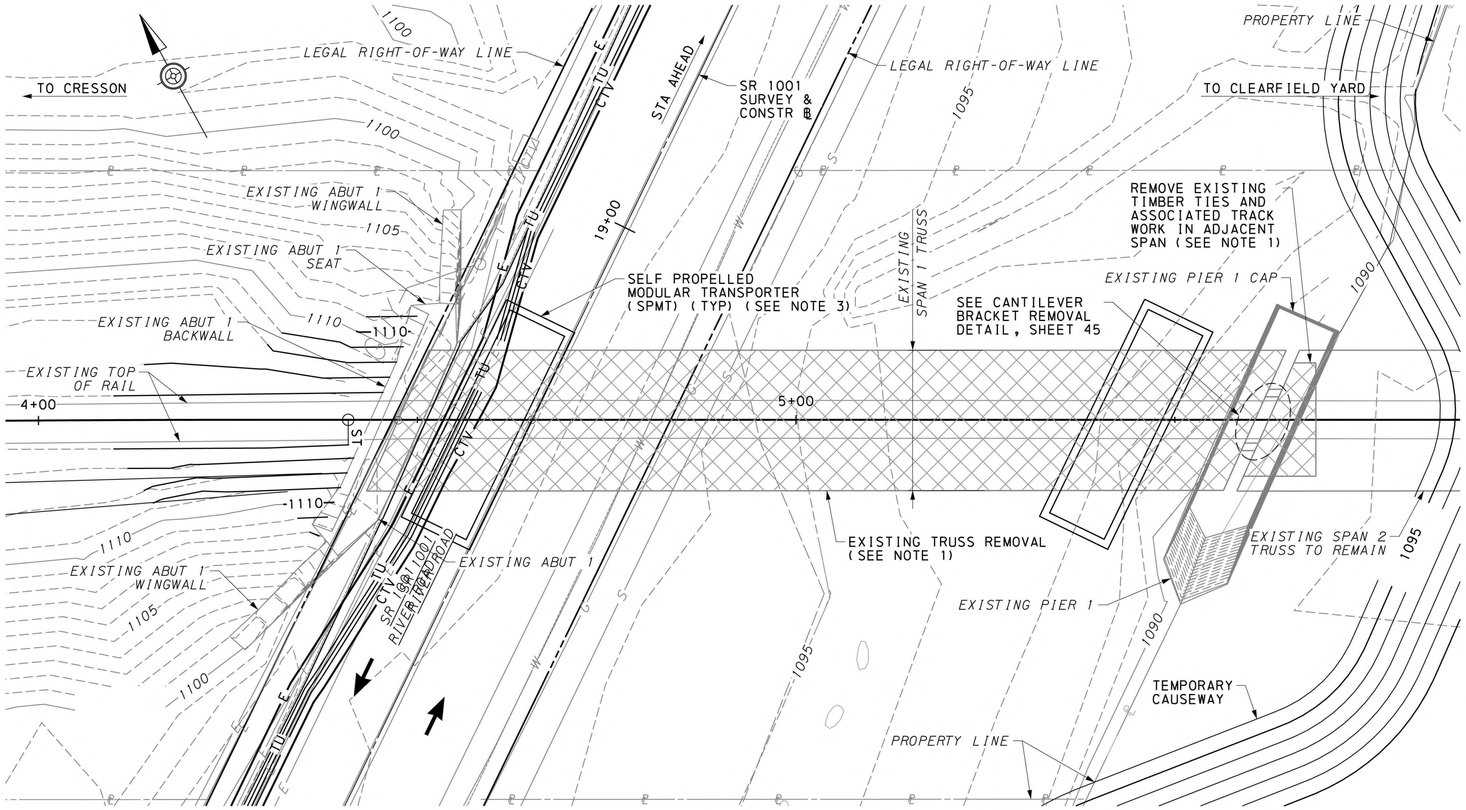

EXISTING SPAN 1 - PLAN

5 0 5 10 FEET

SUPERSTRUCTURE REMOVAL NOTES:

1. THE EXISTING SPAN 1 TRUSS SHALL BE REMOVED IN ITS ENTIRETY. THIS INCLUDES THE REMOVAL OF ATTACHMENTS, BEARINGS, AND TRACKWORK TO THE LIMITS SHOWN ON THIS SHEET. TRACKWORK ON EXISTING SPAN 2 SHALL BE REMOVED IN ACCORDANCE WITH TRACK PLANS TO ACCOMMODATE NECESSARY MODIFICATIONS. COORDINATE REMOVAL WITH SUGGESTED CONSTRUCTION SEQUENCE ON STAGING PLAN & ELEVATION SHEETS.
2. A REMOVAL AND DEMOLITION PLAN, SIGNED BY A REGISTERED PROFESSIONAL ENGINEER IN THE COMMONWEALTH OF PENNSYLVANIA, SHALL BE SUBMITTED TO THE ENGINEER PRIOR TO BEGINNING DEMOLITION. THE REMOVAL AND DEMOLITION PLAN/METHOD SHALL MEET THE REQUIREMENTS OF THE REPLACEMENT SCHEDULE.
3. THE CONTRACTOR SHALL DESIGN THE SPMT SYSTEM AND ITS COMPONENTS AND SHALL SUBMIT THE DESIGN TO THE ENGINEER OF RECORD FOR REVIEW AND APPROVAL. THE SPMT SYSTEM DESIGN AND SHOP DRAWINGS SHALL BE SIGNED BY A PROFESSIONAL ENGINEER LICENSED IN THE COMMONWEALTH OF PENNSYLVANIA.
4. THE CONTRACTOR SHALL EVALUATE THE STRUCTURAL STABILITY OF THE TRUSS DURING REMOVAL. IF STRENGTHENING OF THE EXISTING TRUSS IS REQUIRED FOR REMOVAL, THE CONTRACTOR SHALL SUBMIT SHOP DRAWINGS THAT ARE SIGNED AND SEALED BY A PROFESSIONAL ENGINEER LICENSED IN THE COMMONWEALTH OF PENNSYLVANIA.
5. THE CONTRACTOR SHALL PERFORM ALL WORK WITH CARE SO THAT ANY MATERIALS WHICH ARE TO REMAIN IN PLACE WILL NOT BE DAMAGED. IF THE CONTRACTOR DAMAGES ANY MATERIALS WHICH ARE TO REMAIN IN PLACE, THE DAMAGED MATERIALS SHALL BE REPAIRED OR REPLACED IN A MANNER SATISFACTORY TO THE ENGINEER AT THE EXPENSE OF THE CONTRACTOR.
6. TRACKWORK WITHIN LIMITS OF EXISTING STRUCTURE TO BE REMOVED MAY BE KEPT ON THE STRUCTURE DURING REMOVAL OF THE SPAN IF DEEMED SAFE BY THE CONTRACTOR.
7. FOR SUBSTRUCTURE REPAIR AND REMOVAL DETAILS, SEE SHEETS 8 AND 12.
8. BURIED UTILITIES UNDER SR 1001 SHALL BE PROTECTED DURING EXISTING SUPERSTRUCTURE REMOVAL.
9. SR1001 SHALL BE PROTECTED FROM DAMAGE DURING THE REMOVAL OF THE EXISTING BRIDGE. DEMOLITION OF EXISTING SUPERSTRUCTURE IS NOT TO OCCUR ON SR 1001.
10. THE EXISTING SPAN 1 TRUSS WEIGHS APPROXIMATELY 344 KIPS INCLUDING STEEL DEAD LOAD, ATTACHMENTS, AND TRACKWORK. THE SOUTH TRUSS IS MADE FROM HEAVIER CONSTRUCTION WHEN COMPARED TO THE NORTH TRUSS AND THEREFORE HAS A HIGHER DEAD LOAD. THIS UNBALANCED LOAD SHOULD BE ACCOUNTED FOR WHEN REMOVING THE SPAN.
11. HYDRAULIC JACKS FOR VERTICALLY LIFTING THE SPAN SHALL HAVE A CAPACITY OF 2 TIMES THE VERTICAL LOAD AT EACH SUPPORT LOCATION. SUFFICIENT JACK REDUNDANCY SHALL BE PROVIDED TO BE ABLE TO CONTINUE THE WORK IN CASE OF SINGLE HYDRAULIC JACK FAILURE.
12. FOR EXISTING PIER 1 SPAN 2 BEARING REPLACEMENT DETAILS, SEE SHEETS 34 AND 35.
13. PREPARE AND SUBMIT ALL DOCUMENTS TO OBTAIN PERMITS AND APPROVALS NECESSARY TO REMOVE, TRANSPORT, AND DISPOSE OF THE DEMOLISHED STRUCTURE.
14. REFER TO CONTRACT SPECIAL PROVISIONS FOR FURTHER DETAILS.

LEGEND:

LIMITS OF REMOVAL

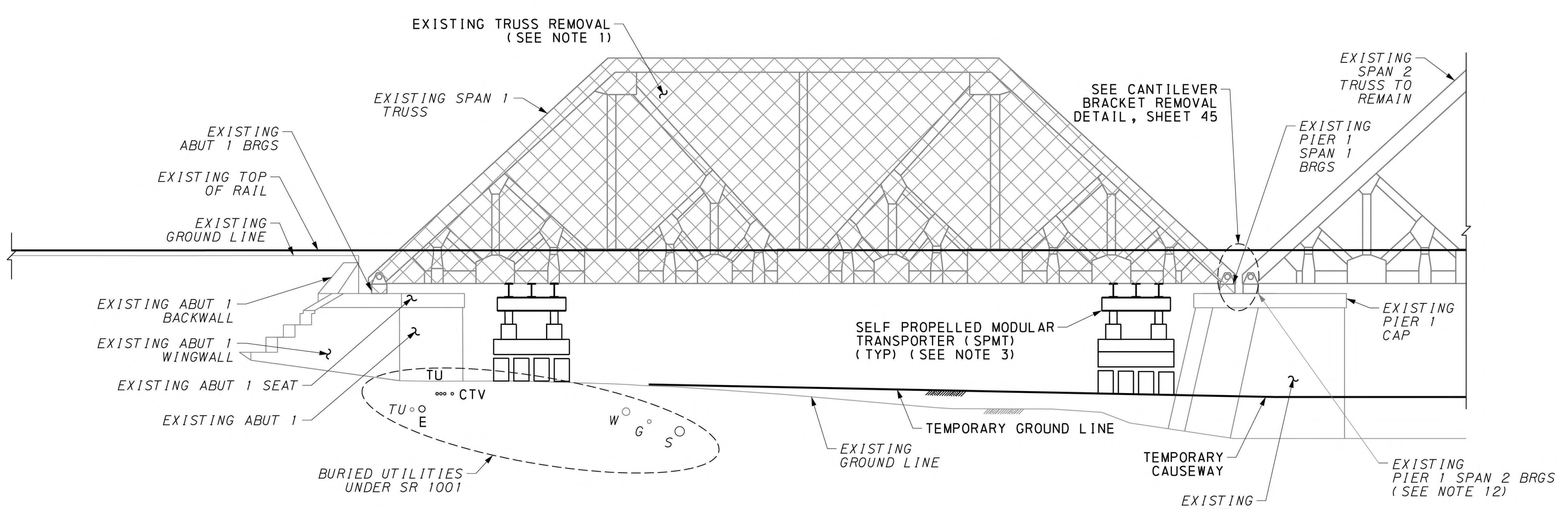

EXISTING SPAN 1 - ELEVATION

5 0 5 10 FEET

Mark	Description	By	Chk'd	Recm'd	Date
REVISIONS					

MPMS/ECMS PROJ: 115877

HNTB

COMMONWEALTH OF PENNSYLVANIA
REGISTERED PROFESSIONAL
ULYSSES C. KOUTSOGIANNIS
ENGINEER
PE073912

COMMONWEALTH OF PENNSYLVANIA
DEPARTMENT OF TRANSPORTATION

CLEARFIELD COUNTY
SR 1001 SECTION MTF
SEG 0132 OFFSET 0701
CR 65.60 (CRESSON BRANCH) STA 4+65.11
OVER SR 1001 (RIVER ROAD)
STEEL THROUGH PLATE GIRDER & STEEL THROUGH TRUSS BRIDGE

EXISTING SPAN 1 DEMO DETAILS

PREPARED BY:
HNTB CORPORATION
4507 NORTH FRONT STREET
SUITE 300
HARRISBURG, PA 17110

RECOMMENDED _____

SHEET 44 OF 54

S-1001RJC

2/12/2024
FILENAME: 77861-W013-s-br-dem03.dgn

DES: JAC	DES CKD: UCK	DWG: DAC	DWG CKD: JAC

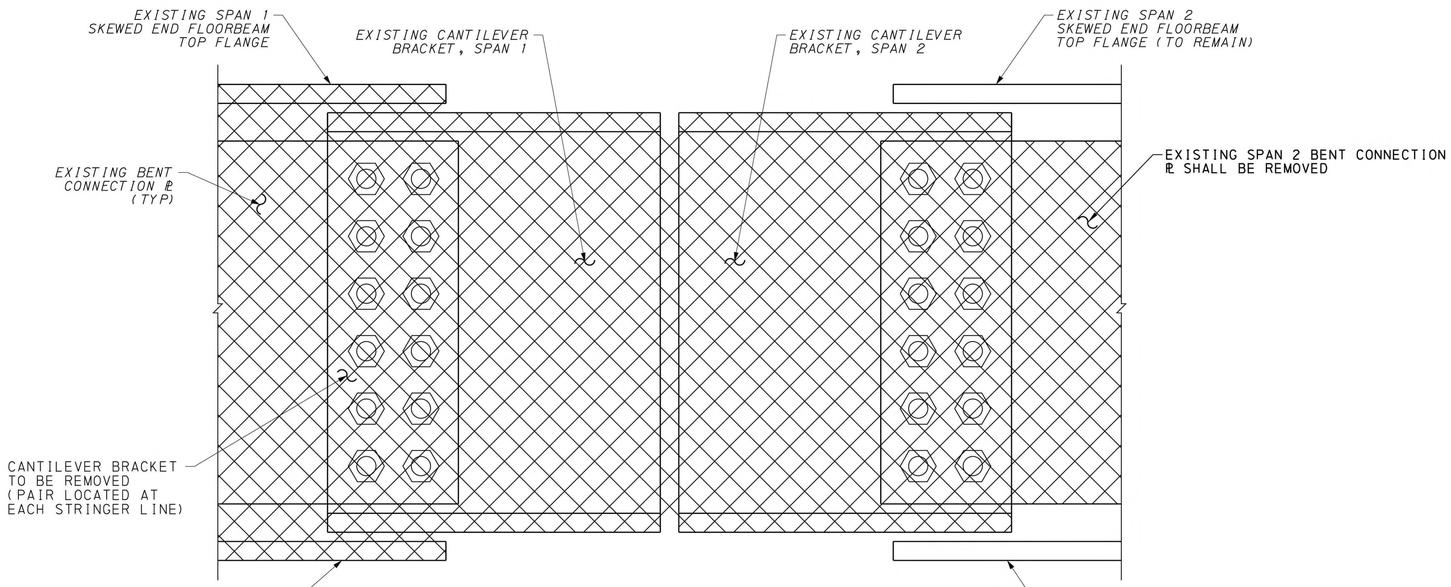

CANTILEVER BRACKET REMOVAL DETAIL

3 0 3 INCHES

LEGEND:

LIMITS OF REMOVAL

Mark	Description	By	Chk'd	Recm'd	Date

REVISIONS

MPMS/ECMS PROJ: 115877

HNTB

COMMONWEALTH OF PENNSYLVANIA
DEPARTMENT OF TRANSPORTATION

COMMONWEALTH OF PENNSYLVANIA REGISTERED PROFESSIONAL ULYSSES C. KOUTSOGIANNIS ENGINEER PE073912

CLEARFIELD COUNTY
SR 1001 SECTION MTF
SEG 0132 OFFSET 0701
CR 65.60 (CRESSON BRANCH) STA 4+65.11
OVER SR 1001 (RIVER ROAD)
STEEL THROUGH PLATE GIRDER & STEEL THROUGH TRUSS BRIDGE

EXISTING SPAN 2 RETROFIT DETAILS

PREPARED BY:
HNTB CORPORATION
4507 NORTH FRONT STREET
SUITE 300
HARRISBURG, PA 17110

RECOMMENDED _____

SHEET 45 OF 54

S-1001RJC

2/12/2024
FILENAME: 17861-W013-s-br-den04.dgn

DES: JAC	DES CKD: UCK	DWG: DAC	DWG CKD: JAC

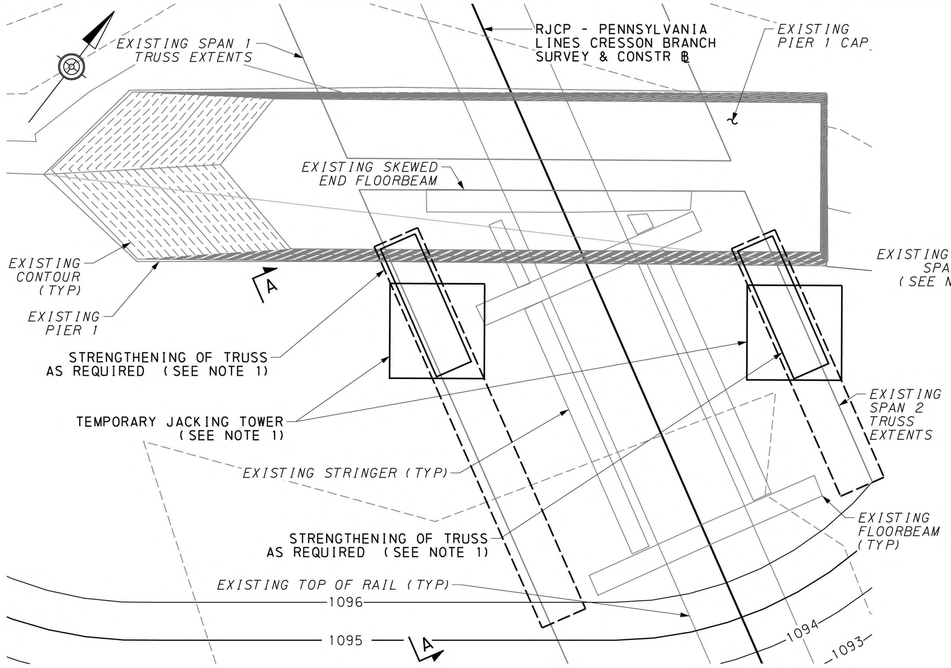

CONCEPTUAL TEMPORARY JACKING DETAIL - PLAN

2 0 2 4 FEET

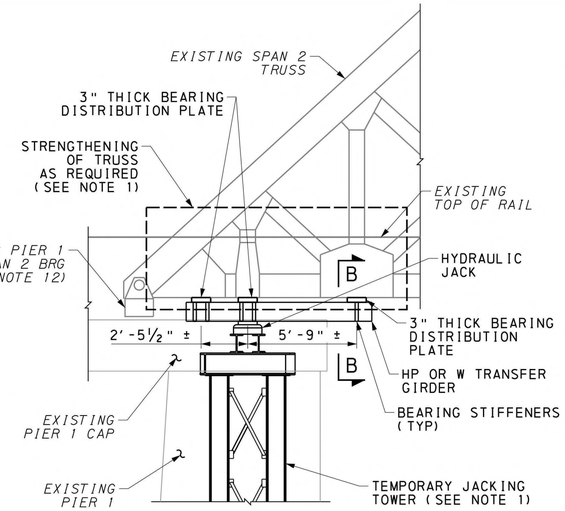

SECTION A-A

2 0 2 4 FEET

(SOUTH TRUSS SHOWN, NORTH TRUSS SIMILAR)

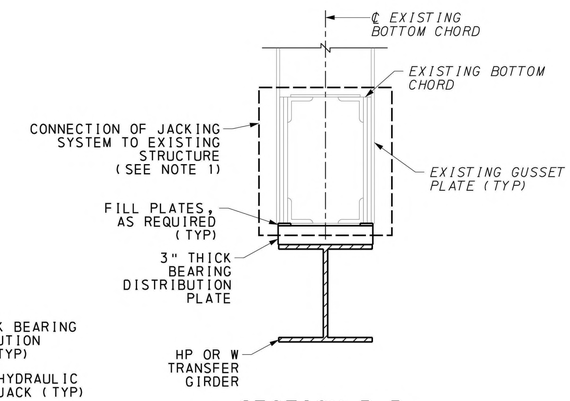

SECTION B-B

6 0 6 12 INCHES

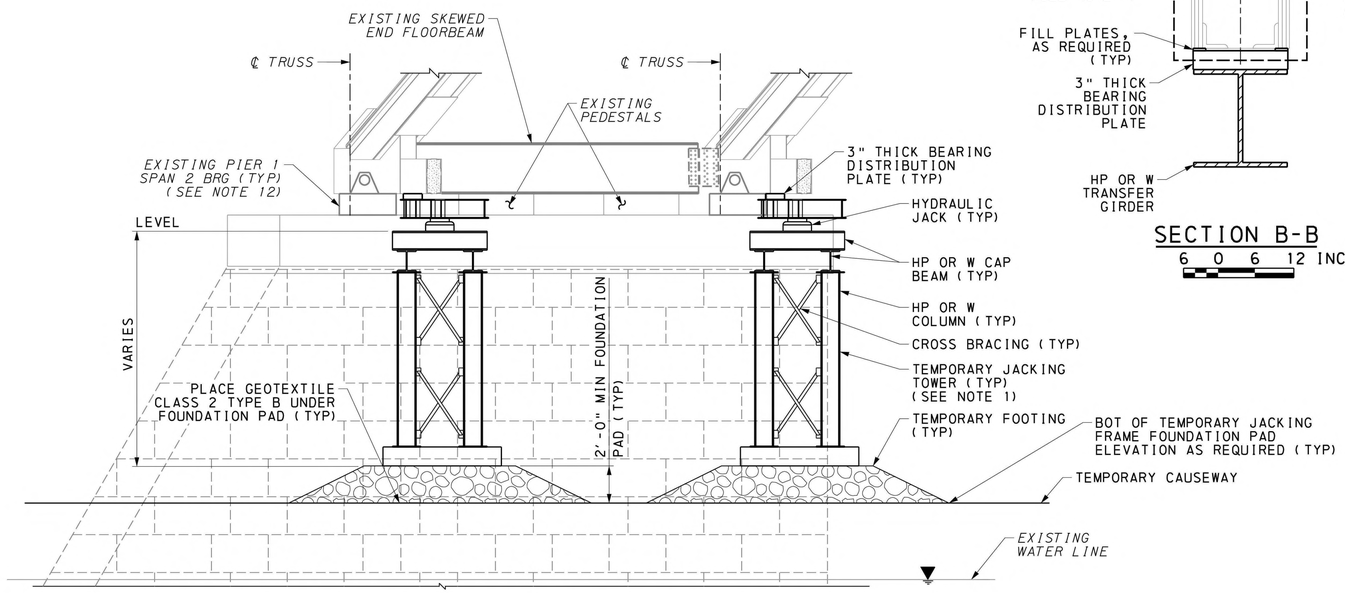

CONCEPTUAL TEMPORARY JACKING DETAIL - ELEVATION

2 0 2 4 FEET

(PIER 1 EAST FACE SHOWN)

NOTES:

1. THE CONTRACTOR SHALL DESIGN THE VERTICAL JACKING SYSTEM, TEMPORARY JACKING TOWERS, ASSOCIATED COMPONENTS, CONNECTION TO THE EXISTING STRUCTURE, AND ANY NECESSARY STRENGTHENING OF EXISTING SPAN 2. THE CONTRACTOR SHALL SUBMIT THE DESIGN TO THE ENGINEER OF RECORD FOR REVIEW AND APPROVAL. THE DESIGN AND SHOP DRAWINGS OF THE VERTICAL JACKING SYSTEM, TEMPORARY JACKING TOWERS, CONNECTION TO THE EXISTING STRUCTURE, AND STRENGTHENING OF EXISTING SPAN 2 SHALL BE SIGNED BY A PROFESSIONAL ENGINEER LICENSED IN THE COMMONWEALTH OF PENNSYLVANIA.
2. A JACKING PLAN, SIGNED BY A REGISTERED PROFESSIONAL ENGINEER IN THE COMMONWEALTH OF PENNSYLVANIA, SHALL BE SUBMITTED TO THE ENGINEER PRIOR TO BEGINNING JACKING. THE JACKING PLAN/METHOD SHALL MEET THE REQUIREMENTS OF THE REPLACEMENT SCHEDULE.
3. THE JACKING DETAILS SHOWN ARE SUGGESTED AND CONCEPTUAL DETAILS ONLY.
4. THE CONTRACTOR SHALL EVALUATE THE STRUCTURAL STABILITY OF THE TRUSS AND ADJACENT TRUSSES DURING VERTICAL JACKING. THE CONDITION OF ALL BEARINGS SHALL BE EVALUATED BEFORE JACKING OPERATIONS OCCUR. AIDS FOR STABILITY, SUCH AS TEMPORARY TIE DOWNS, SHALL BE USED IF NECESSARY AT BEARING LOCATIONS.
5. CLOSE THE BRIDGE AND SR1001 TO TRAFFIC IN ACCORDANCE WITH THE CONTRACT SPECIAL PROVISIONS.
6. JACK ALL TRUSS LINES AT EACH SUPPORT SIMULTANEOUSLY. CONTRACTOR TO FURNISH AND INSTALL GAUGES FOR THE MEASUREMENT OF THE SUPERSTRUCTURE MOVEMENT. JACK LOCATION SHALL BE AS CLOSE AS FEASIBLE TO EXISTING BEARING LOCATION.
7. MONITOR DIFFERENTIAL POSITIONS OF TRUSS LINES BY ACCURATE SURVEY TO ENSURE STABILITY.
8. DO NOT PERFORM JACKING DURING HIGH WIND VELOCITIES OR IN OTHER ADVERSE CONDITIONS PER OSHA REQUIREMENTS.
9. FOR TEMPORARY SUPPORTS FOUNDED ON SPREAD FOOTINGS, RAISE THE BRIDGE A MINIMUM HEIGHT OF 1/8" AND HOLD THAT ELEVATION FOR 6 HOURS. DO NOT REMOVE THE BEARINGS AND PIER CAP UNTIL IT IS VERIFIED THAT NO SETTLEMENT HAS OCCURRED DURING THIS TIME FRAME.
10. THE EXISTING SPAN 2 TRUSS WEIGHS APPROXIMATELY 344 KIPS INCLUDING STEEL DEAD LOAD, ATTACHMENTS, AND TRACKWORK. THE SOUTH TRUSS IS MADE FROM HEAVIER CONSTRUCTION WHEN COMPARED TO THE NORTH TRUSS AND THEREFORE HAS A HIGHER DEAD LOAD. THIS UNBALANCED LOAD SHOULD BE ACCOUNTED FOR WHEN JACKING THE SPAN. DEAD LOAD WAS CALCULATED BASED ON FIELD EVALUATION OF EXISTING SPAN 1, CONTRACTOR SHALL VERIFY.
11. HYDRAULIC JACKS FOR VERTICALLY LIFTING THE SPAN SHALL HAVE A CAPACITY OF 2 TIMES THE VERTICAL LOAD AT EACH SUPPORT LOCATION. SUFFICIENT JACK REDUNDANCY SHALL BE PROVIDED TO BE ABLE TO CONTINUE THE WORK IN CASE OF SINGLE HYDRAULIC JACK FAILURE.
12. FOR EXISTING PIER 1 SPAN 2 BEARING REPLACEMENT DETAILS, SEE SHEETS 34 AND 35.
13. THE CONTRACTOR SHALL PERFORM ALL WORK WITH CARE SO THAT ANY MATERIALS WHICH ARE TO REMAIN IN PLACE WILL NOT BE DAMAGED. IF THE CONTRACTOR DAMAGES ANY MATERIALS WHICH ARE TO REMAIN IN PLACE, THE DAMAGED MATERIALS SHALL BE REPAIRED OR REPLACED IN A MANNER SATISFACTORY TO THE ENGINEER AT THE EXPENSE OF THE CONTRACTOR.
14. REFER TO CONTRACT SPECIAL PROVISIONS FOR FURTHER DETAILS.

FOUNDATION PAD NOTES:

1. LEVEL THE TOP OF THE TEMPORARY CAUSEWAY AND COMPACT THE SUBGRADE OF THE FOUNDATION PAD FOOTPRINT.
2. PLACE CLASS 2, TYPE B GEOTEXTILE OVER THE PREPARED SUBGRADE PRIOR TO CONSTRUCTING TOWERS.
3. PLACE AND COMPACT PENNDOT NO 2A COARSE AGGREGATE TO A MINIMUM DEPTH OF 2' AND TO THE REQUIRED ELEVATION. EXTEND THE TOP SURFACE OF THE AGGREGATE PLACEMENT TO A MINIMUM LATERAL DISTANCE OF 2' BEYOND ALL SIDES OF THE TEMPORARY FOUNDATION OF THE JACKING FRAME AND MAINTAIN AT LEAST 1:1 SIDE SLOPES AFTER PLACING AND COMPACTING THE AGGREGATE. PLACE IN LOOSE LIFTS OF NO GREATER THAN 8" AND COMPACT TO 100% OF THE MAXIMUM DRY DENSITY. THE SURFACE OF THE FILL SHOULD BE LEVEL TO ACCOMMODATE THE TEMPORARY FOUNDATION OF THE JACKING FRAME.
4. REFER TO E&S PLANS FOR TEMPORARY CAUSEWAY TYPICAL SECTION.

Mark	Description	By	Chk'd	Recm'd	Date
REVISIONS					

MPMS/ECMS PROJ: 115877

HNTB

COMMONWEALTH OF PENNSYLVANIA
REGISTERED PROFESSIONAL
ULYSSES C. KOUTSOGIANNIS
ENGINEER
PE073912

COMMONWEALTH OF PENNSYLVANIA
DEPARTMENT OF TRANSPORTATION

CLEARFIELD COUNTY
SR 1001 SECTION MTF
SEG 0132 OFFSET 0701
CR 65.60 (CRESSON BRANCH) STA 4+65.11
OVER SR 1001 (RIVER ROAD)
STEEL THROUGH PLATE GIRDER & STEEL THROUGH TRUSS BRIDGE

CONCEPTUAL TRUSS JACKING DETAILS

PREPARED BY:
HNTB CORPORATION
4507 NORTH FRONT STREET
SUITE 300
HARRISBURG, PA 17110

RECOMMENDED _____

SHEET 46 OF 54

S-1001RJC

2/12/2024
FILENAME: 77861-M013-s-br-dem05.dgn

DES: JAC	DES CKD: UCK	DWG: DAC	DWG CKD: JAC

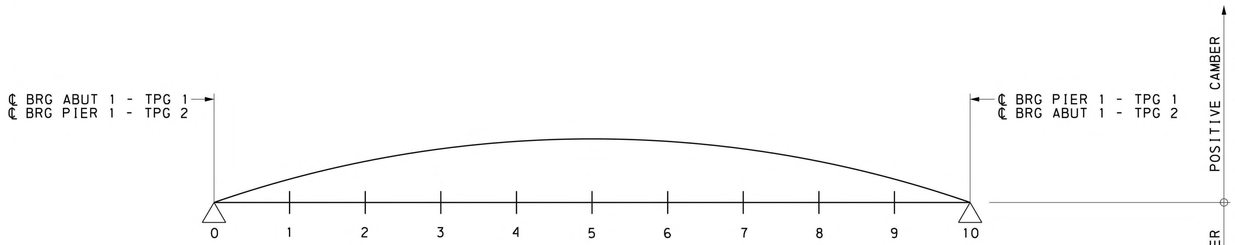

CAMBER DIAGRAM

NOT TO SCALE

CAMBER ORDINATES Y (INCHES)											
CAMBER COMPONENT	POINT NUMBER										
	0	1	2	3	4	5	6	7	8	9	10
NON-COMPOSITE DEAD LOAD CAMBER =	0.00	0.14	0.26	0.36	0.42	0.44	0.42	0.36	0.26	0.14	0.00
COMPOSITE DEAD LOAD CAMBER =	0.00	0.01	0.03	0.04	0.04	0.04	0.04	0.04	0.03	0.01	0.00
TOTAL CAMBER =	0.00	0.16	0.29	0.39	0.46	0.48	0.46	0.39	0.29	0.16	0.00

CAMBER NOTES:

1. NON-COMPOSITE DEAD LOAD CAMBER INCLUDES: THROUGH PLATE GIRDERS AND ATTACHMENTS, FLOORBEAMS/END BEAMS, AND DECK PLATE.
2. COMPOSITE DEAD LOAD CAMBER INCLUDES: KNEEBRACES, DIRECT FIXATION FASTENERS, AND TRACK COMPONENTS.
3. COMPOSITE ACTION IS DEFINED BY COMPOSITE ACTION BETWEEN THE DECK PLATE AND THE THROUGH GIRDER FLOOR SYSTEM.
4. CAMBER IS BASED ON SUPPORT OF THE SPAN IN ITS FINAL CONDITION.
5. EACH CAMBER COMPONENT IS ROUNDED TO TWO DECIMAL PLACES WHEN REPORTED. THEREFORE, REPORTED CAMBER COMPONENT MAY NOT ADD DIRECTLY TO TOTAL CAMBER.

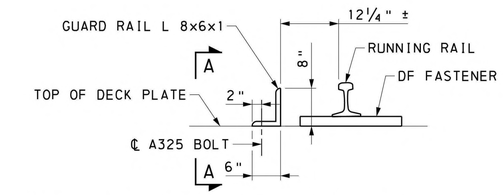

GUARD RAIL DETAIL-DIRECT FIXATION

(LOOKING UPSTATION, RIGHT GUARD RAIL SHOWN, LEFT GUARD RAIL IS MIRRORED ABOUT ℄ BRIDGE)

12 0 12 INCHES

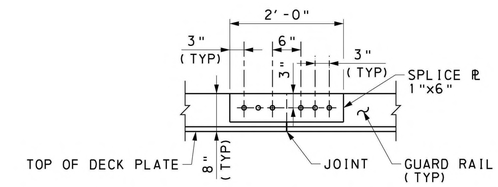

OPTIONAL GUARD RAIL SPLICE DETAIL

12 0 12 INCHES

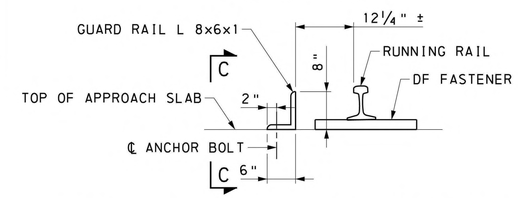

GUARD RAIL DETAIL-APPROACH SLAB

(LOOKING UPSTATION, RIGHT GUARD RAIL SHOWN, LEFT GUARD RAIL IS MIRRORED ABOUT ℄ BRIDGE)

12 0 12 INCHES

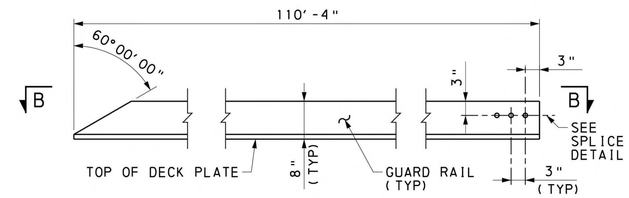

SECTION A-A

12 0 12 INCHES

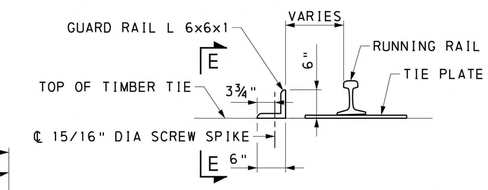

GUARD RAIL DETAIL-BALLAST

(LOOKING UPSTATION, RIGHT GUARD RAIL SHOWN, LEFT GUARD RAIL IS MIRRORED ABOUT ℄ BRIDGE)

12 0 12 INCHES

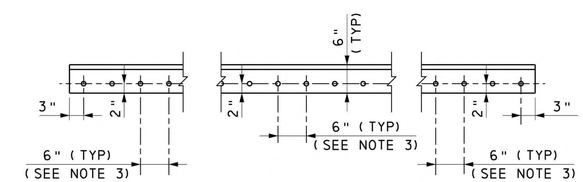

SECTION B-B

12 0 12 INCHES

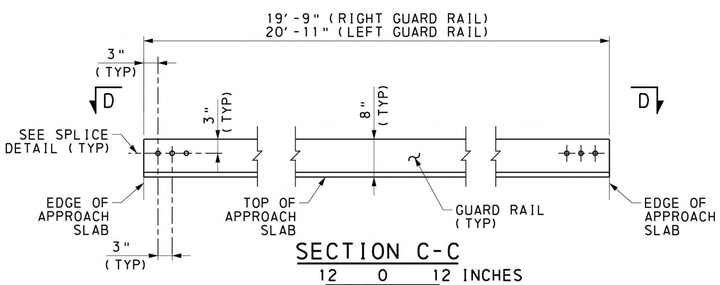

SECTION C-C

12 0 12 INCHES

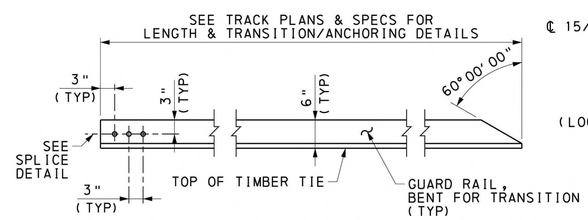

SECTION E-E

12 0 12 INCHES

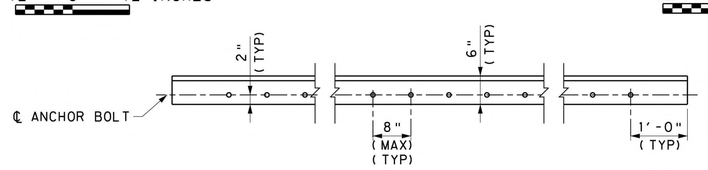

SECTION D-D

12 0 12 INCHES

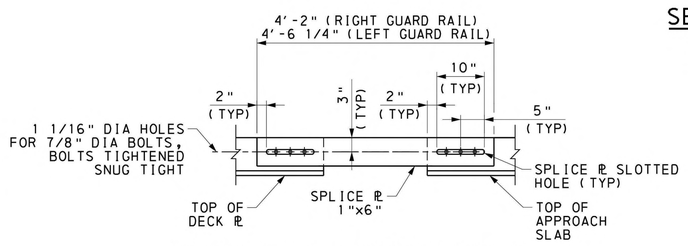

GUARD RAIL SPLICE DETAIL

(APPROACH SLAB TO BRIDGE)

12 0 12 INCHES

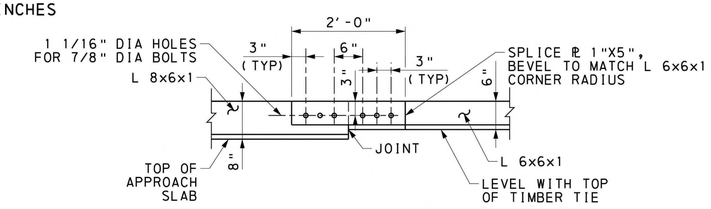

GUARD RAIL SPLICE DETAIL

(BALLAST TO APPROACH SLAB)

12 0 12 INCHES

NOTES:

1. FOR GIRDER & FRAMING DETAILS, SEE SHEETS 16-31.
2. FOR DECK PLAN & DETAILS, SEE SHEETS 38-42.
3. MIDDLE BOLT SPACING BETWEEN FB-3 & FB-4 AND FB-56 & FB-57 SHALL BE 5" RATHER THAN 6".

Mark	Description	By	Chk'd	Recm'd	Date
REVISIONS					

MPMS/ECMS PROJ: 115877

HNTB

COMMONWEALTH OF PENNSYLVANIA
DEPARTMENT OF TRANSPORTATION

CLEARFIELD COUNTY
SR 1001 SECTION MTF
SEG 0132 OFFSET 0701
CR 65.60 (CRESSON BRANCH) STA 4+65.11
OVER SR 1001 (RIVER ROAD)
STEEL THROUGH PLATE GIRDER & STEEL THROUGH TRUSS BRIDGE
CAMBER DIAGRAM & MISC DETAILS

COMMONWEALTH OF PENNSYLVANIA
REGISTERED PROFESSIONAL
ULYSSES C. KOUTSOGIANNIS
ENGINEER
PE073912

PREPARED BY:
HNTB CORPORATION
4507 NORTH FRONT STREET
SUITE 300
HARRISBURG, PA 17110

RECOMMENDED _____

SHEET 47 OF 54

S-1001RJC

DES: JAC | DES CKD: MDB | DWG: DAC | DWG CKD: JAC

2/12/2024
FILENAME: 77861-W013-s-br-cam01.dgn

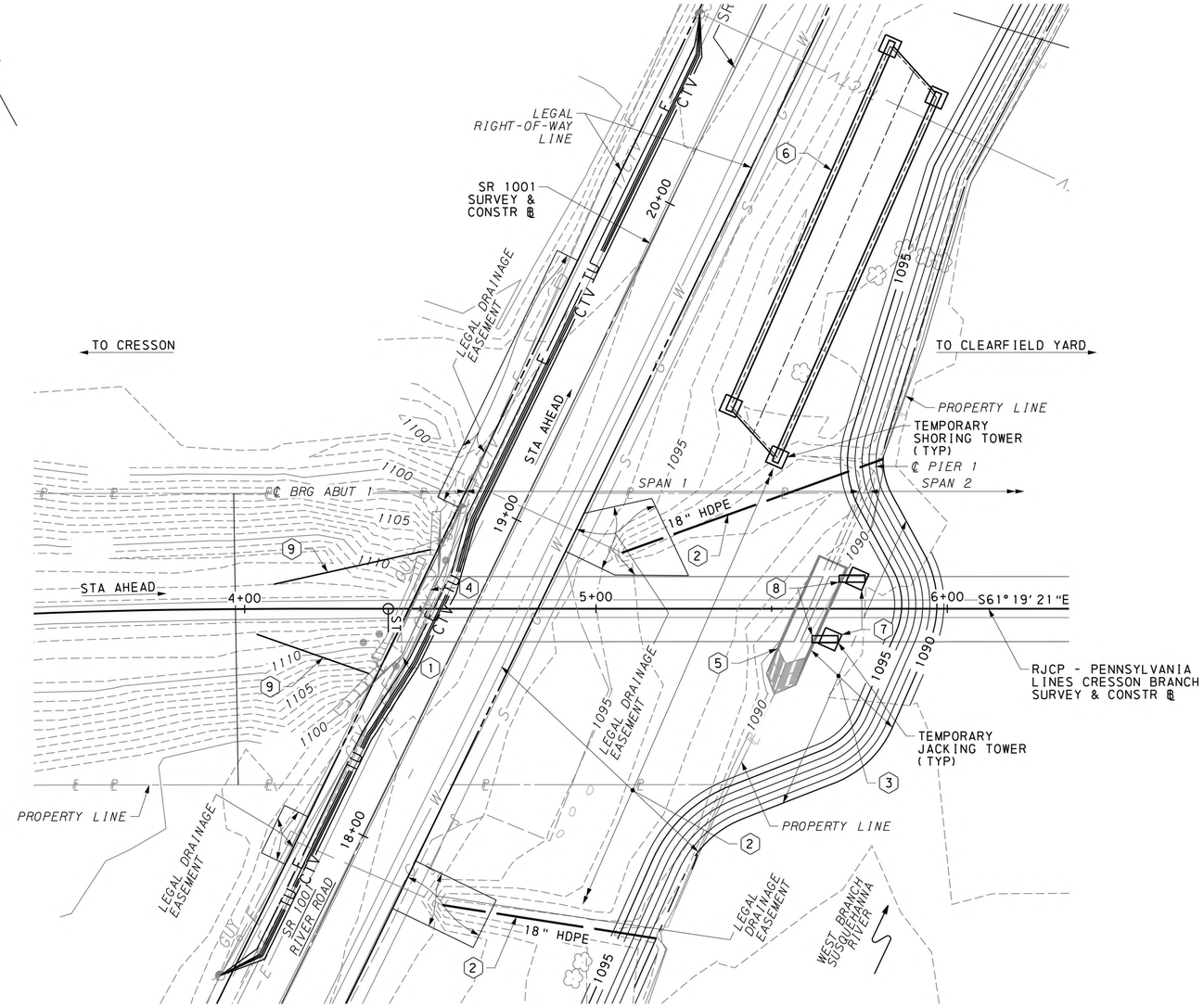

PLAN

10 0 10 20 FEET

(10) NOT SHOWN FOR CLARITY

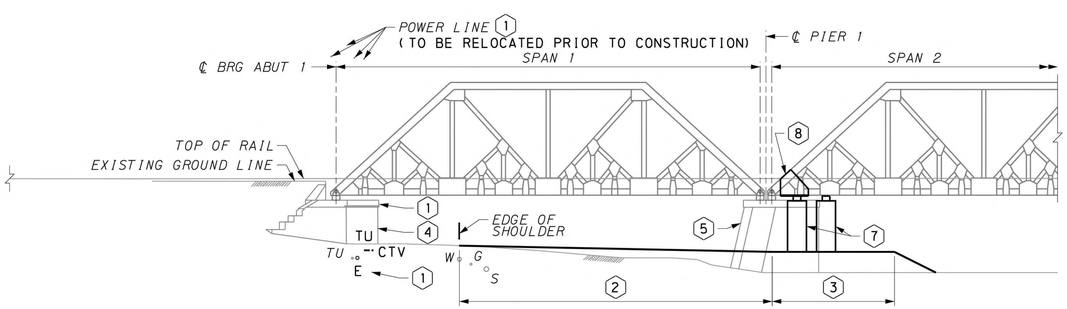

ELEVATION

10 0 10 20 FEET

(6) (10) NOT SHOWN FOR CLARITY

SUGGESTED CONSTRUCTION SEQUENCE

PRE-CONSTRUCTION:	IMPACTS TO ROADWAY/RAILROAD:
(1) UTILITY RELOCATION WORK INVOLVING THE ELECTRICAL AND TELECOMMUNICATION LINES AT THE ABUTMENT IS COMPLETED PRIOR TO MOBILIZATION AND SITE PREPARATION.	TEMPORARY CLOSURE OF SOUTHBOUND LANE OF RIVER ROAD
STAGE 1:	**IMPACTS TO ROADWAY/RAILROAD:**
(2) PREPARE SITE FOR CONSTRUCTION. EXTEND EXISTING DRAINAGE PIPES, ESTABLISH NEAR LEVEL GRADE THROUGHOUT WORK AREA, PROTECT EXISTING UNDERGROUND UTILITIES AS REQUIRED. NO VIBRATORY EQUIPMENT SHALL BE USED FOR COMPACTION.	TEMPORARY CLOSURE OF NORTHBOUND LANE OF RIVER ROAD
(3) CONSTRUCT TEMPORARY CAUSEWAY.	NONE
(4) REPOINT MASONRY AND PERFORM CRACK REPAIRS AT ABUTMENT 1.	TEMPORARY CLOSURE OF SOUTHBOUND LANE OF RIVER ROAD
(5) REPOINT MASONRY AND PERFORM CRACK REPAIRS AT PIER 1.	NONE
(6) CONSTRUCT NEW THROUGH GIRDER SPAN ON TEMPORARY SHORING IN BRIDGE STAGING AREA.	NONE
(7) ERECT PIER 1 JACKING TOWERS ON CAUSEWAY.	NONE
(8) RETROFIT SPAN 2 FOR JACKING.	WEEKEND TRACK OUTAGES
(9) INSTALL TEMPORARY SHEETING AND SHORING AT ABUTMENT 1 REQUIRED FOR EXCAVATION.	WEEKEND TRACK OUTAGES
(10) MOBILIZE AND STAGE SPMT IN BRIDGE STAGING AREA SOUTH OF EXISTING BRIDGE.	BEGIN 15-DAY DETOUR OF RIVER ROAD

LEGEND

→	DIRECTION OF TRAFFIC
200	PROPOSED TEMPORARY CONTOUR
200	*EXISTING CONTOUR*
	LEGAL RIGHT-OF-WAY
CTV	*EXISTING CABLE TELEVISION*
E	*EXISTING ELECTRIC*
W	*EXISTING WATER*
S	*EXISTING SANITARY SEWER*
TU	*EXISTING TELEPHONE UNDERGROUND*
G	*EXISTING GAS*
CTV	PROPOSED CABLE TELEVISION
E	PROPOSED ELECTRIC UNDERGROUND
TU	PROPOSED TELEPHONE UNDERGROUND

NOTES:

1. REFER TO PROJECT SPECIFICATIONS FOR STREAM & WILDLIFE RESTRICTIONS.

Mark	Description	By	Chk'd	Recm'd	Date
REVISIONS					

MPMS/ECMS PROJ: 115877

HNTB

COMMONWEALTH OF PENNSYLVANIA
DEPARTMENT OF TRANSPORTATION

COMMONWEALTH OF PENNSYLVANIA REGISTERED PROFESSIONAL ULYSSES C. KOUTSOGIANNIS ENGINEER PE073912

CLEARFIELD COUNTY
SR 1001 SECTION MTF

SEG 0132 OFFSET 0701
CR 65.60 (CRESSON BRANCH) STA 4+65.11
OVER SR 1001 (RIVER ROAD)

STEEL THROUGH PLATE GIRDER & STEEL THROUGH TRUSS BRIDGE

STAGING PLAN & ELEVATION 1 OF 3

PREPARED BY:
HNTB CORPORATION
4507 NORTH FRONT STREET
SUITE 300
HARRISBURG, PA 17110

RECOMMENDED _____

SHEET 48 OF 54

S-1001RJC

2/12/2024
FILENAME: 7786!-W013-s-br-gpe51.dgn

DES: JAC	DES CKD: MJR	DWG: DAC	DWG CKD: JAC

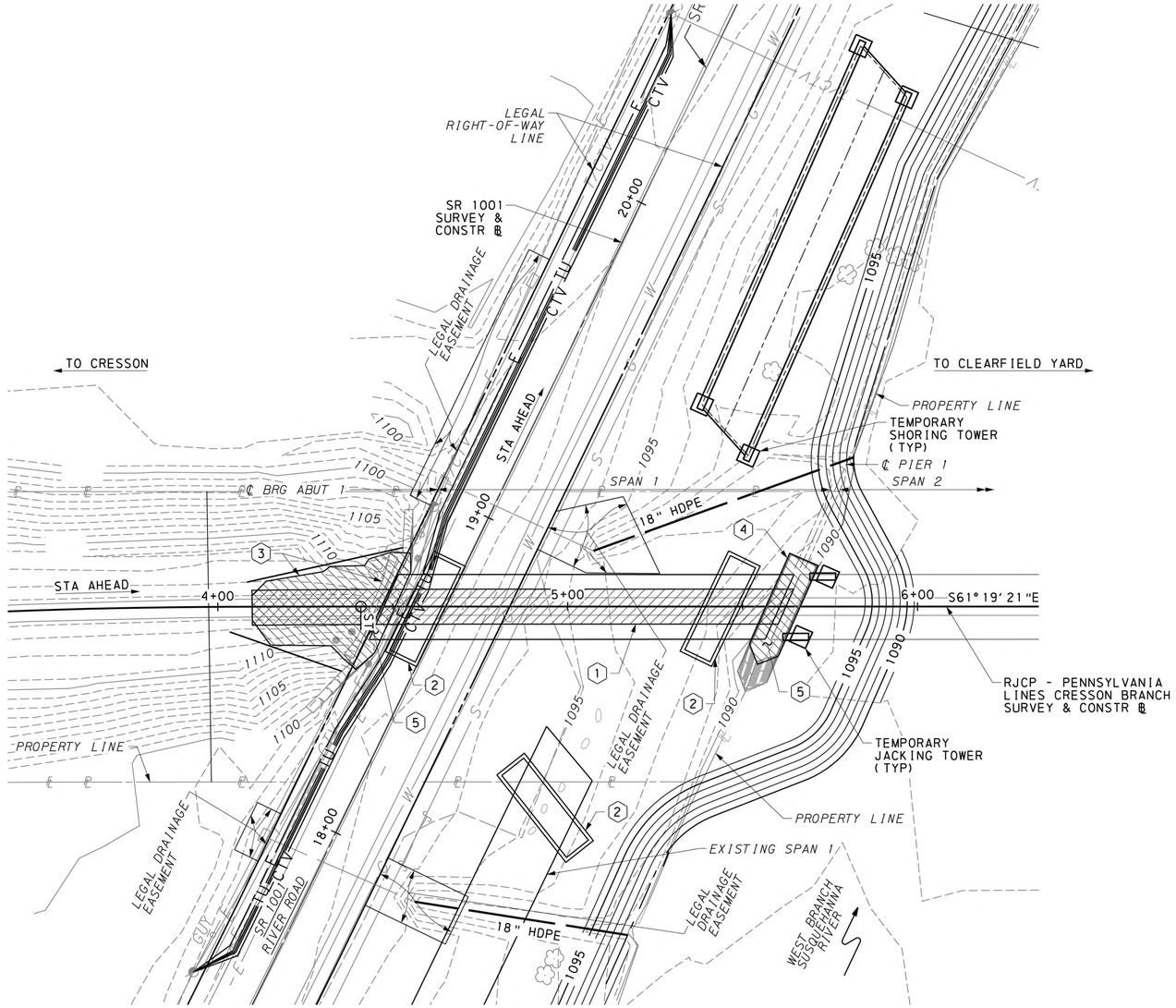

PLAN

10 0 10 20 FEET

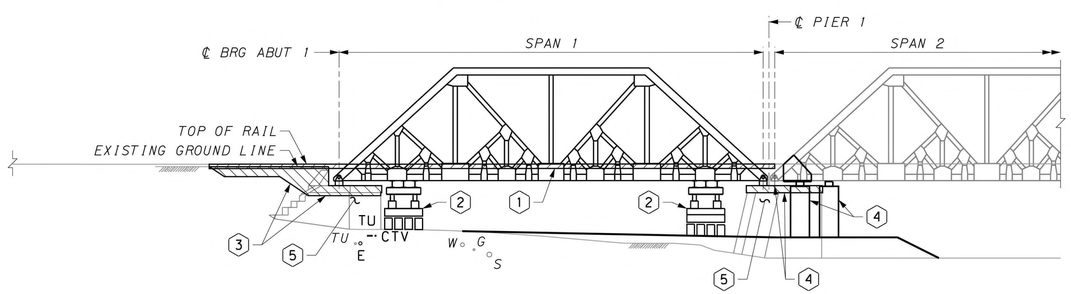

ELEVATION

10 0 10 20 FEET

SUGGESTED CONSTRUCTION SEQUENCE

STAGE 2A (SEE NOTE 2):

1. IF REQUIRED, REMOVE RAILS AND TIMBER TIES FROM SPAN 1 AND WEST APPROACH.
2. USE SPMT TO LIFT AND REMOVE EXISTING TRUSS SPAN 1. REMOVE TO SOUTH AND DEMOLISH. DEMOLITION IS NOT TO OCCUR ON SR 1001.
3. EXCAVATE BEHIND ABUTMENT 1. REMOVE PORTIONS OF ABUTMENT 1 SEAT AND BACKWALL.
4. JACK WEST END OF EXISTING TRUSS SPAN 2. REMOVE BEARINGS AND REMOVE PORTIONS OF PIER 1 CAP.
5. GROUT INTERIOR OF PIER AND ABUTMENT AS REQUIRED.

IMPACTS TO ROADWAY/RAILROAD:

4-DAY OUTAGE OF TRACK 1.
CONTINUE 15-DAY DETOUR OF RIVER ROAD.

LEGEND

→	DIRECTION OF TRAFFIC
200	PROPOSED TEMPORARY CONTOUR
200	*EXISTING CONTOUR*
	LEGAL RIGHT-OF-WAY
CTV	*EXISTING CABLE TELEVISION*
E	*EXISTING ELECTRIC*
W	*EXISTING WATER*
S	*EXISTING SANITARY SEWER*
TU	*EXISTING TELEPHONE UNDERGROUND*
G	*EXISTING GAS*
CTV	PROPOSED CABLE TELEVISION
E	PROPOSED ELECTRIC UNDERGROUND
TU	PROPOSED TELEPHONE UNDERGROUND

NOTES:

1. STAGE 2A AND STAGE 2B TO OCCUR DURING SAME 4-DAY TRACK OUTAGE.
2. THE CONTRACTOR SHALL EVALUATE THE GLOBAL STABILITY OF ABUTMENT 1 AND PIER 1 DURING THE REMOVAL OF THE EXISTING SPAN AND VERTICAL JACKING OF THE ADJACENT SPAN.
3. REFER TO PROJECT SPECIFICATIONS FOR STREAM & WILDLIFE RESTRICTIONS.

Mark	Description	By	Chk'd	Recm'd	Date
REVISIONS					

MPMS/ECMS PROJ: 115877

HNTB

COMMONWEALTH OF PENNSYLVANIA
DEPARTMENT OF TRANSPORTATION

COMMONWEALTH OF PENNSYLVANIA — REGISTERED PROFESSIONAL — ULYSSES C. KOUTSOGIANNIS — ENGINEER — PE073912

CLEARFIELD COUNTY
SR 1001 SECTION MTF
SEG 0132 OFFSET 0701
CR 65.60 (CRESSON BRANCH) STA 4+65.11
OVER SR 1001 (RIVER ROAD)
STEEL THROUGH PLATE GIRDER & STEEL THROUGH TRUSS BRIDGE
STAGING PLAN & ELEVATION 2 OF 3

PREPARED BY:
HNTB CORPORATION
4507 NORTH FRONT STREET
SUITE 300
HARRISBURG, PA 17110

RECOMMENDED _____

SHEET 49 OF 54

S-1001RJC

2/12/2024
FILENAME: 77861-W013-s-br-gpe52.dgn

DES: JAC	DES CKD: MJR	DWG: DAC	DWG CKD: JAC

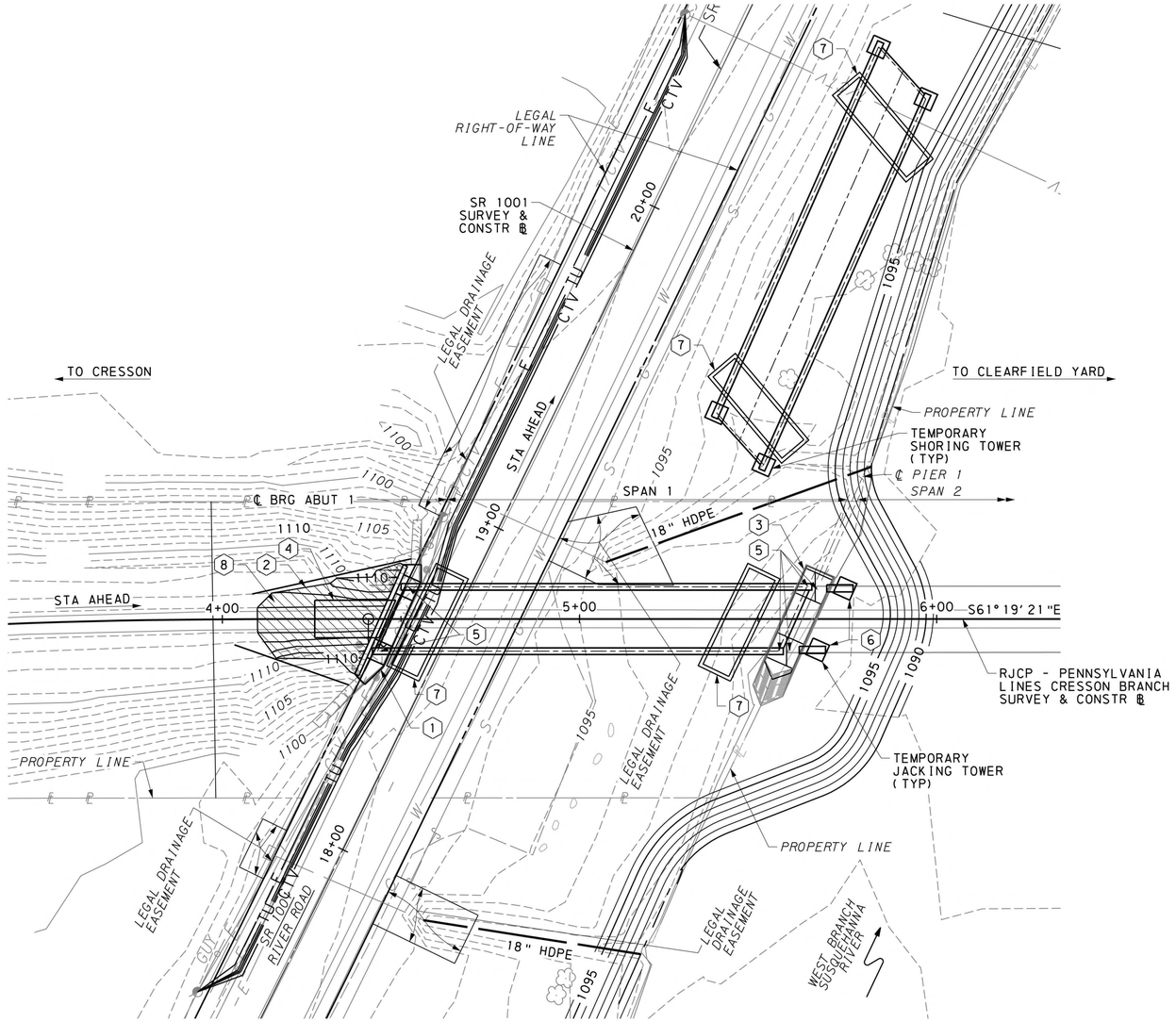

PLAN

10 0 10 20 FEET

(9) (10) NOT SHOWN FOR CLARITY

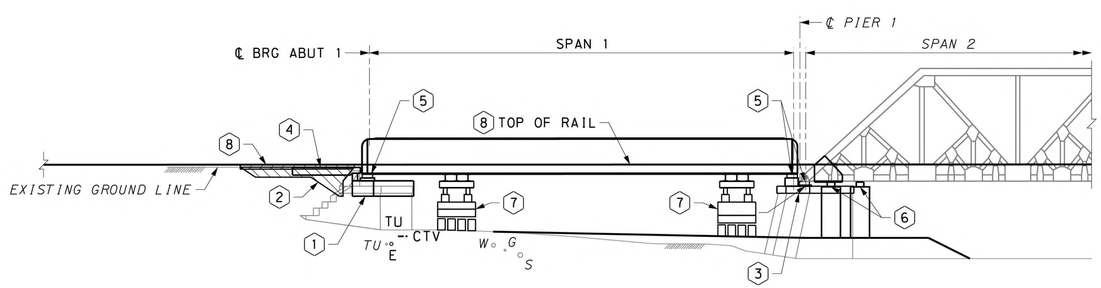

ELEVATION

10 0 10 20 FEET

(9) (10) NOT SHOWN FOR CLARITY

SUGGESTED CONSTRUCTION SEQUENCE

STAGE 2B (SEE NOTE 2):

IMPACTS TO ROADWAY/RAILROAD:

(1) INSTALL NEW PRECAST BRIDGE SEAT AND BACKWALL AT ABUTMENT 1.

(2) INSTALL GEOSYNTHETIC REINFORCED SOIL IN TRACK APPROACH. CONSTRUCT BALLASTED TRACK.

(3) INSTALL NEW PRECAST PIER CAP AT PIER 1.

(4) INSTALL NEW APPROACH SLAB AT ABUTMENT 1.

(5) SET NEW BEARINGS AT ABUTMENT 1 AND PIER 1.

(6) LOWER SPAN 2 TRUSS TO FINAL ELEVATION ON NEW PIER CAP AND BEARINGS.

(7) USE SPMT TO MOVE NEW BRIDGE SPAN FROM STAGING AREA TO FINAL ALIGNMENT.

(8) INSTALL TIMBER TIES IN WEST APPROACH. INSTALL RAIL THROUGH WORK AREA.

(9) ADJUST DIRECT FIXATION FASTENERS TO FINAL TRACK PROFILE.

(10) RESUME TRAIN SERVICE.

CONTINUE
4-DAY OUTAGE OF TRACK 1.
15-DAY DETOUR OF RIVER ROAD.

STAGE 3: (NOT SHOWN)

	IMPACTS TO ROADWAY/RAILROAD:
(11) REOPEN RIVER ROAD.	END 15-DAY DETOUR OF RIVER ROAD
(12) REMOVE PIER 1 JACKING TOWERS AND CAUSEWAY.	NONE
(13) RESTORE SITE TO PRECONSTRUCTION CONDITION.	TEMPORARY CLOSURE OF NORTHBOUND LANE OF RIVER ROAD
(14) MILL AND OVERLAY OF SR 1001 RIVER ROAD.	TEMPORARY CLOSURE OF NORTHBOUND AND SOUTHBOUND LANES OF RIVER ROAD

NOTES:

1. STAGE 2A AND STAGE 2B TO OCCUR DURING SAME 4-DAY TRACK OUTAGE.
2. THE CONTRACTOR SHALL EVALUATE THE GLOBAL STABILITY OF ABUTMENT 1 AND PIER 1 DURING THE ERECTION OF THE PROPOSED STRUCTURE AND BEARING REPLACEMENT OPERATIONS AT EXISTING SPAN 2.
3. REFER TO PROJECT SPECIFICATIONS FOR STREAM & WILDLIFE RESTRICTIONS.

LEGEND

→	DIRECTION OF TRAFFIC
200	PROPOSED TEMPORARY CONTOUR
200	*EXISTING CONTOUR*
	LEGAL RIGHT-OF-WAY
CTV	*EXISTING CABLE TELEVISION*
E	*EXISTING ELECTRIC*
W	*EXISTING WATER*
S	*EXISTING SANITARY SEWER*
TU	*EXISTING TELEPHONE UNDERGROUND*
G	*EXISTING GAS*
CTV	PROPOSED CABLE TELEVISION
E	PROPOSED ELECTRIC UNDERGROUND
TU	PROPOSED TELEPHONE UNDERGROUND

Mark	Description	By	Chk'd	Recm'd	Date
REVISIONS					

MPMS/ECMS PROJ: 115877

HNTB

COMMONWEALTH OF PENNSYLVANIA
REGISTERED PROFESSIONAL
ULYSSES C. KOUTSOGIANNIS
ENGINEER
PE073912

COMMONWEALTH OF PENNSYLVANIA
DEPARTMENT OF TRANSPORTATION

CLEARFIELD COUNTY
SR 1001 SECTION MTF
SEG 0132 OFFSET 0701
CR 65.60 (CRESSON BRANCH) STA 4+65.11
OVER SR 1001 (RIVER ROAD)
STEEL THROUGH PLATE GIRDER & STEEL THROUGH TRUSS BRIDGE
STAGING PLAN & ELEVATION 3 OF 3

PREPARED BY:
HNTB CORPORATION
4507 NORTH FRONT STREET
SUITE 300
HARRISBURG, PA 17110

RECOMMENDED _____

SHEET 50 OF 54

S-1001RJC

2/12/2024
FILENAME: 77861-W013-s-br-gpe53.dgn

DES: JAC	DES CKD: MJR	DWG: DAC	DWG CKD: JAC

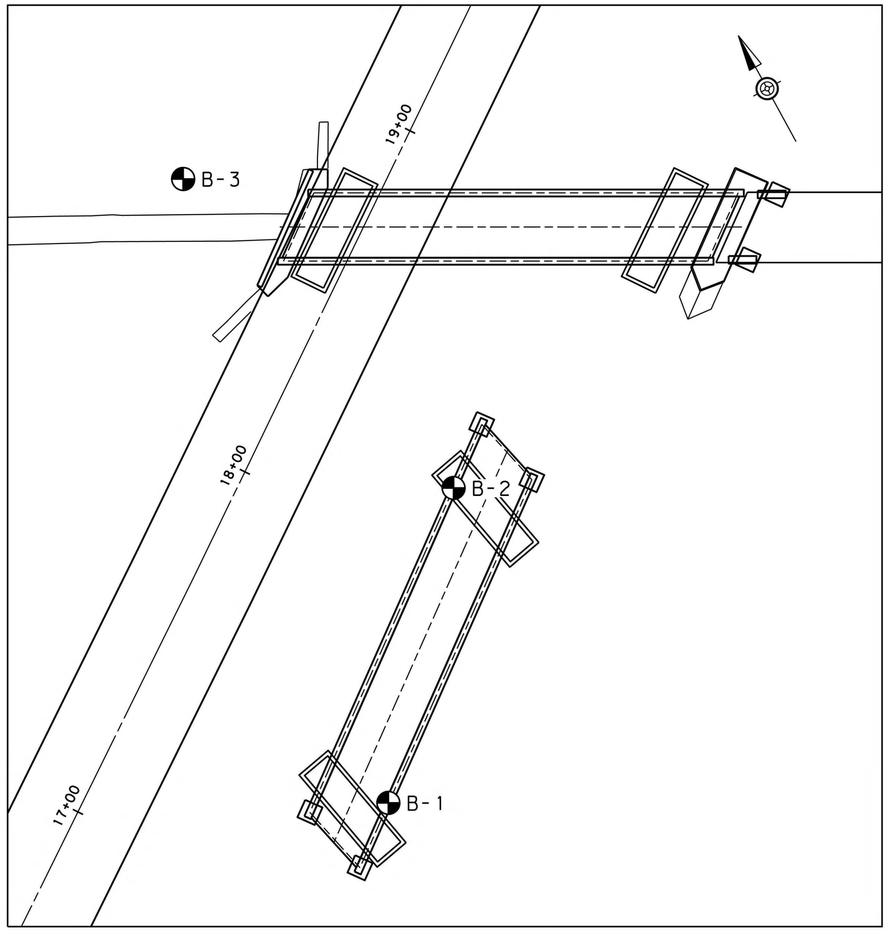

BORING LOCATION LAYOUT

SCALE

20 FEET 0 20 FEET

GENERAL NOTES

THIS SHEET IS INCLUDED FOR THE CONVENIENCE OF THE DEPARTMENT. REFER TO PUBLICATION 408 SECTION 102.05 FOR FURTHER INFORMATION.

FOR ADDITIONAL SOIL AND ROCK DESCRIPTIONS SEE PUBLICATION 222.

THE BORING LOGS AND RELATED INFORMATION DEPICT SUBSURFACE CONDITIONS ONLY AT THE SPECIFIC LOCATIONS AND DATES INDICATED. SUBSURFACE CONDITIONS MAY DIFFER FROM THE CONDITIONS REPORTED AT THE SPECIFIC LOCATIONS. ALSO, THE PASSAGE OF TIME MAY RESULT IN A CHANGE OF CONDITIONS AT THE BORING LOCATIONS.

LEGEND

PP	POCKET PENETROMETER
TOR	TOP OF ROCK ELEVATION

THE DESCRIPTION OF THE MATERIALS ENCOUNTERED HAVE BEEN VERIFIED.

AM

THE SUBSURFACE EXPLORATION DATA THAT ARE PRESENTED ON THESE DRAWINGS (INCLUDING BORING LOGS, EARTH SAMPLES, ROCK CORES, CLASSIFICATION OF MATERIALS AND DEPTH OF BORINGS) ACCURATELY REPRESENT THE CONDITIONS ENCOUNTERED BY THE TEST BORING PROGRAM AT EACH BORING LOCATION.

GEOTECHNICAL ENGINEER/ENGINEERING GEOLOGIST — DATE: 8/2/2022

Prepared By:

COMMONWEALTH OF PENNSYLVANIA REGISTERED PROFESSIONAL ADAM J. MADAR ENGINEER No. PE088732

AMERICAN GEOTECHNICAL & ENVIRONMENTAL SERVICES, INC.

COMMONWEALTH OF PENNSYLVANIA
DEPARTMENT OF TRANSPORTATION

CLEARFIELD COUNTY
SR 1001 SECTION MTF
SEG 0132 OFFSET 0701
CR 65.60 (CRESSON BRANCH) STA 4+65.11
OVER SR 1001 (RIVER ROAD)
STEEL THROUGH PLATE GIRDER & STEEL THROUGH TRUSS BRIDGE

STRUCTURE BORINGS (SHEET 1 OF 4)

M:\2022\040\exhibits\structure\22040_strb.dgn
8/1/2023

PLT: RJS | CKD: KDA | QA/QC: AM

SUBSTRUCTURE UNIT:
SPMT

LOG 1 OF 1

BORING NUMBER:	BORING LOCATION	START: 07/15/2022 11:00 AM	HAMMER: SAFETY
B-1	STATION: 17+38.0 OFFSET: 72.0 FT. RT.	FINISH: 07/15/2022 12:30 PM	EFFICIENCY: 0.6 ERa

DRILLING METHOD AND EQUIPMENT:	SIZE OF CORE:	VERTICAL SCALE:	TOP OF BORING ELEVATION:
DOUBLE TUBE WIRE LINE-NQ, SAFETY, ACKER SOIL SCOUT TRACK RIG	1.874 IN.	0 FT. 5 FT. [redacted]	1092.7 FT.

DRILLING INSPECTOR: CAMERON FUSKO
DRILLER & DRILLING COMPANY: H. BALMER
PENNSYLVANIA DRILLING COMPANY

▽ 0 HR. READING - ELAPSED TIME: El. 1091.2 ft. - 0.0 hr.
▼ 24 HR. READING - ELAPSED TIME: El. 1091.0 ft. - 71.5 hr.

ELEV.	GRAPHIC	MATERIAL DESCRIPTION	AASHTO/ USCS	SAMPLE DEPTH	SAMPLE NO.**	BLOW COUNT ~~~~ PP/T TSF	N 60 / %RQD	REC (ft.)	REC (%)
1090		**SILT** and **SAND**, trace Clay, contains organics, soft to medium, moist to damp, homogeneous, non-plastic, brown to dark brown, alluvium. 4.0'/El. 1088.7	A-4 / ML	1.5	S-1	1-1-2 ~~~~ 0.75	3	1.2	80
				3.0	S-2	2-2-2 ~~~~ 0.50	4	1.5	100
		Class. on S-1 to S-2 (0.0'-3.0') *NMC = 66.6%.*	a-1-b / sp	4.2	S-3	4-7-50/.2' ~~~~ 0.75	57	1.2	100
1085	TOR 1088.20	**SAND**, little Silt, little Gravel, contains rock fragments, very dense, moist, homogeneous, poorly graded, gray, residuum. 4.5'/El. 1088.2		4.5	S-4	50/.0'	>50	0.0	0
		Water @ 3.9' prior to coring.		4.5	R-1		0%	2.5	96
		SANDSTONE, light gray, coarse grained, medium hard to very hard, weathered to fresh, narrow to medium bedding with flat dip, jointed, moderate to wide spacing, sheer to steep dip, narrow joint opening, *(RQD=38%).* *Joint (RD=80), 5.8-6.0'.* *Joint (RD=45), 6.5-6.6'.* *Coal spars, 6.6-7.0'.* *Clay layer, 6.8-6.9'.* *Broken with coal spars, 7.4-8.0'.* *Coal spars, 9.5-9.9'.* 12.1'/El. 1080.6		7.1	R-2		43%	3.0	100
				10.1	R-3		80%	2.0	100

◇ RQD % ◇ ⊙ Soil/Rock Rec. % ⊙ (20 40 60 80) ▲ SPT (N_{60}) ▲ (10 20 30 40)

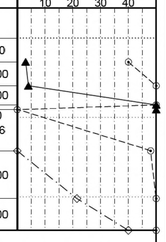

**SAMPLE NO. shading indicates lab testing performed.

SUBSTRUCTURE UNIT:
SPMT

LOG 1 OF 1

BORING NUMBER:	BORING LOCATION	START: 07/15/2022 8:00 AM	HAMMER: SAFETY
B-2	STATION: 18+20.0 OFFSET: 51.0 FT. RT.	FINISH: 07/15/2022 10:00 AM	EFFICIENCY: 0.6 ERa

DRILLING METHOD AND EQUIPMENT:	SIZE OF CORE:	VERTICAL SCALE:	TOP OF BORING ELEVATION:
DOUBLE TUBE WIRE LINE-NQ, SAFETY, ACKER SOIL SCOUT TRACK RIG	1.874 IN.	0 FT. 5 FT. [redacted]	1094.6 FT.

DRILLING INSPECTOR: CAMERON FUSKO
DRILLER & DRILLING COMPANY: H. BALMER
PENNSYLVANIA DRILLING COMPANY

▽ 0 HR. READING - ELAPSED TIME: El. 1092.9 ft. - 0.0 hr.
▼ 24 HR. READING - ELAPSED TIME: El. 1091.4 ft. - 74.5 hr.

ELEV.	GRAPHIC	MATERIAL DESCRIPTION	AASHTO/ USCS	SAMPLE DEPTH	SAMPLE NO.**	BLOW COUNT ~~~~ PP/T TSF	N 60 / %RQD	REC (ft.)	REC (%)
1090		**SAND** and **SILT**, trace Gravel, trace Clay, contains organics, loose, moist to damp, homogeneous, poorly graded, non-plastic, brown to dark brown, alluvium.	A-4 / SM	1.5	S-1	3-3-4	7	1.1	73
				3.0	S-2	3-3-3	6	1.5	100
		Class. on S-1 to S-3 (0.0'-4.5') *NMC = 40.1%.* 5.5'/El. 1089.1		4.5	S-3	2-1-3	4	1.3	87
				6.0	S-4	1-1-12	13	1.2	80
				6.6	S-5	28-50/.1'	>50	0.6	100
1085	TOR 1087.10	**SAND**, little Silt, trace Gravel, contains rock fragments, medium dense to very dense, moist, homogeneous, poorly graded, gray to dark gray, residuum. 7.5'/El. 1087.1	a-1-b / sp	7.5	S-6	50/.0'	>50	0.0	0
		Water @ 5.6' prior to coring.		8.2	R-1		0%	0.7	100
		SANDSTONE, light gray, coarse grained, hard to very hard, slightly weathered to fresh, narrow to moderate bedding with flat dip, jointed, close to medium spacing, sheer to steep dip, *narrow to tight joints, (RQD=42%).* *Joint (RD=50), 8.1-8.3'.* *Joint (RD=80), 8.5-9.1'.* *Coal spars, 9.4-9.9'.* *Joint (RD=40), 9.5-9.7'.* *Joint (RD=45), 10.9-11.1'.* 13.2'/El. 1081.4		10.7	R-2		44%	2.5	100
		Coal spars, 12.1-12.6'.			R-3		52%	2.5	100

◇ RQD % ◇ ⊙ Soil/Rock Rec. % ⊙ (20 40 60 80) ▲ SPT (N_{60}) ▲ (10 20 30 40)

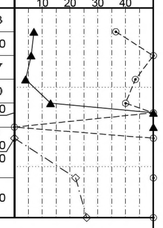

**SAMPLE NO. shading indicates lab testing performed.

GENERAL NOTES

THIS SHEET IS INCLUDED FOR THE CONVENIENCE OF THE DEPARTMENT. REFER TO PUBLICATION 408 SECTION 102.05 FOR FURTHER INFORMATION.

FOR ADDITIONAL SOIL AND ROCK DESCRIPTIONS SEE PUBLICATION 222.

THE BORING LOGS AND RELATED INFORMATION DEPICT SUBSURFACE CONDITIONS ONLY AT THE SPECIFIC LOCATIONS AND DATES INDICATED. SUBSURFACE CONDITIONS MAY DIFFER FROM THE CONDITIONS REPORTED AT THE SPECIFIC LOCATIONS. ALSO, THE PASSAGE OF TIME MAY RESULT IN A CHANGE OF CONDITIONS AT THE BORING LOCATIONS.

LEGEND

PP	POCKET PENETROMETER
TOR	TOP OF ROCK ELEVATION

THE DESCRIPTION OF THE MATERIALS ENCOUNTERED HAVE BEEN VERIFIED.

AM

Prepared By:

COMMONWEALTH OF PENNSYLVANIA
REGISTERED PROFESSIONAL
ADAM J. MADAR
ENGINEER
No. PE089732

AMERICAN GEOTECHNICAL & ENVIRONMENTAL SERVICES, INC.

COMMONWEALTH OF PENNSYLVANIA
DEPARTMENT OF TRANSPORTATION

CLEARFIELD COUNTY
SR 1001 SECTION MTF
SEG 0132 OFFSET 0701
CR 65.60 (CRESSON BRANCH) STA 4+65.11
OVER SR 1001 (RIVER ROAD)
STEEL THROUGH PLATE GIRDER & STEEL THROUGH TRUSS BRIDGE

STRUCTURE BORINGS (SHEET 2 OF 4)

PLT: RJS | CKD: KDA | QA/QC: AM

M:\2022\040\exhibits\structure\2040_strb.dgn
3/23/2023
PENNDOT STRUCTURE BORING LOG - PENNDOT_GINT_VERSION_123 9-21-2016.GDT - 7/29/22 16:29 - \\PROJECTS\2022\2040\2040.GPJ

SUBSTRUCTURE UNIT:
ABUTMENT 1

LOG 1 OF 1

BORING NUMBER:	BORING LOCATION	START: 07/14/2022 10:00 AM	HAMMER: SAFETY
B-3	STATION: 18+62.0 OFFSET: 48.0 FT. LT.	FINISH: 07/14/2022 3:30 PM	EFFICIENCY: 0.6 ERa

DRILLING METHOD AND EQUIPMENT:	SIZE OF CORE:	VERTICAL SCALE:	TOP OF BORING ELEVATION:
DOUBLE TUBE WIRE LINE-NQ, SAFETY, ACKER SOIL SCOUT TRACK RIG	1.874 IN.	0 FT. 5 FT. [redacted]	1111.9 FT.

DRILLING INSPECTOR: CAMERON FUSKO
DRILLER & DRILLING COMPANY: H. BALMER
PENNSYLVANIA DRILLING COMPANY

▽ 0 HR. READING - ELAPSED TIME: El. 1106.5 ft. - 0.0 hr.
▼ 24 HR. READING - ELAPSED TIME: El. 1096.6 ft. - 94.5 hr.

ELEV. | GRAPHIC | MATERIAL DESCRIPTION | AASHTO/USCS | SAMPLE DEPTH | SAMPLE NO.** | BLOW COUNT ~~~~ PP/T TSF | N 60 / %RQD | REC (ft.) | REC (%) | ◇ RQD % ◇ ⊙ Soil/Rock Rec. % ⊙ (20 40 60 80) ▲ SPT (N_{60}) ▲ (10 20 30 40)

1110 ▽ 1105 1100 ▼ 1095 1090 1085 1080 1075

TOR 1084.90

SILT, some Sand, little Gravel, contains slag, stiff, dry, homogeneous, non-plastic, black to dark brown, fill.
4.5'/El. 1107.4

SILT, some Sand, little Clay, trace Gravel, contains organics, stiff, damp to dry, homogeneous, non-plastic, light brown, fill.

Thin root organics throughout.
Class. on S-4 to S-8 (4.5' - 12.0')
NMC=21.1%.
12.0'/El. 1099.9

SILT, some Sand, little Clay, trace Gravel, medium to stiff, moist to damp, homogeneous, non-plastic, gray to brown, alluvium.
S-9, gray silt with organics.
Class. on S-9 to S-15 (12.0'-22.5')
NMC=27.8%.

Orange brown clay, 21.5-23.0'.
23.0'/El. 1088.9

SAND, some Gravel, little Silt, medium dense to very dense, moist to wet, homogeneous, well graded, brown, alluvium.
S-16 to S-18, rounded gravel.
27.0'/El. 1084.9

Most likely residual soil from 26.5-27.0'; moderate auger chatter.
Water @ 21.3' prior to coring.

SANDSTONE, gray to light gray, coarse grained, hard to very hard, weathered to fresh, narrow to moderate bedding with shallow to flat dip, jointed, wide spacing, very steep to shallow dip, narrow joint opening, *(RQD=34%).*

Weathered and broken with coal spars, 33.0-33.4'.
Joint (RD=40), 33.3-33.4'.

Coal spars, 38.0-39.0'.
39.8'/El. 1072.1

Coal seam, 39.0-39.5'.
Joint (RD=60), 39.0-39.2'.

AASHTO/USCS	SAMPLE DEPTH	SAMPLE NO.**	BLOW COUNT	N 60 / %RQD	REC (ft.)	REC (%)
a-4 / ml	1.5	S-1	3-5-6	11	0.5	33
	3.0	S-2	4-5-6	11	0.6	39
	4.5	S-3	5-5-6	11	0.5	33
A-4 / CL	6.0	S-4	3-4-3	7	0.6	40
	7.5	S-5	3-4-4	8	0.4	27
	9.0	S-6	3-4-4	8	1.2	80
	10.5	S-7	5-6-5	11	1.1	73
	12.0	S-8	3-4-3	7	1.2	80
A-4 / ML	13.5	S-9	4-5-5	10	1.5	100
	15.0	S-10	3-5-5 **0.75**	10	1.5	100
	16.5	S-11	3-4-4 **2.00**	8	1.5	100
	18.0	S-12	3-3-4 **1.50**	7	1.5	100
	19.5	S-13	2-2-3 **0.50**	5	1.5	100
	21.0	S-14	2-3-5 **0.75**	8	1.5	100
	22.5	S-15	2-5-4 **2.00**	9	1.5	100
a-1-b / sw	24.0	S-16	6-9-20 **2.25**	29	1.5	100
	25.5	S-17	21-18-11	29	1.5	100
	26.3	S-18	16-50/.3'	>50	0.8	100
	27.0	S-19	50/.0'	>50	0.0	0
	27.8	R-1		0%	0.8	100
		R-2		44%	5.0	100
	32.8	R-3		34%	4.9	98
	37.8	R-4		20%	1.7	85

**SAMPLE NO. shading indicates lab testing performed.

GENERAL NOTES

THIS SHEET IS INCLUDED FOR THE CONVENIENCE OF THE DEPARTMENT. REFER TO PUBLICATION 408 SECTION 102.05 FOR FURTHER INFORMATION.

FOR ADDITIONAL SOIL AND ROCK DESCRIPTIONS SEE PUBLICATION 222.

THE BORING LOGS AND RELATED INFORMATION DEPICT SUBSURFACE CONDITIONS ONLY AT THE SPECIFIC LOCATIONS AND DATES INDICATED. SUBSURFACE CONDITIONS MAY DIFFER FROM THE CONDITIONS REPORTED AT THE SPECIFIC LOCATIONS. ALSO, THE PASSAGE OF TIME MAY RESULT IN A CHANGE OF CONDITIONS AT THE BORING LOCATIONS.

LEGEND

PP POCKET PENETROMETER
TOR TOP OF ROCK ELEVATION

THE DESCRIPTION OF THE MATERIALS ENCOUNTERED HAVE BEEN VERIFIED.
AM

Prepared By:

COMMONWEALTH OF PENNSYLVANIA
REGISTERED PROFESSIONAL
ADAM J. MADAR
ENGINEER
No. PE089732

AMERICAN GEOTECHNICAL & ENVIRONMENTAL SERVICES, INC.

COMMONWEALTH OF PENNSYLVANIA
DEPARTMENT OF TRANSPORTATION

CLEARFIELD COUNTY
SR 1001 SECTION MTF
SEG 0132 OFFSET 0701
CR 65.60 (CRESSON BRANCH) STA 4+65.11
OVER SR 1001 (RIVER ROAD)
STEEL THROUGH PLATE GIRDER & STEEL THROUGH TRUSS BRIDGE
STRUCTURE BORINGS (SHEET 3 OF 4)

PLT: RJS | CKD: KDA | QA/QC: AM

M:_2022\040\exhibits\structure\22040_strb.dgn
3/23/2023
PENNDOT STRUCTURE BORING LOG - PENNDOT_GINT_VERSION_4.2.3 + 21-2016.GDT - 7/29/22 16:30 - \\PROJECTS\2022\22040\22040.GPJ

LABORATORY TEST SUMMARY - SOILS

					% GRAIN SIZE DISTRIBUTION (AASHTO)							CLASSIFICATION			PLASTICITY PARAMETERS			SHEAR STRENGTH				
BORING NUMBER	STATION & OFFSET	SAMPLE #	TEST DEPTH (FT.)	NATURAL MOISTURE %	GRAVEL %	SAND %	COARSE SAND %	FINE SAND %	FINES %	SILT %	CLAY %	AASHTO	USCS	S.G.	LIQUID LIMIT	PLASTIC LIMIT	P. I.	C (TSF)	ϕ (DEG.)	C' (TSF)	ϕ' (DEG)	TEST METHOD
B-1	17+38.0 72 ft. RT.	S-1 to 2	0.0 to 3.0	66.6	0.0	40.8	2.1	38.7	59.2	49.4	9.8	A-4	ML		NP	NP	NP					
B-2	18+20.0 51 ft. RT.	S-1 to 3	0.0 to 4.5	40.1	5.8	49.7	6.9	42.8	44.5	40.5	4.0	A-4	SM		NP	NP	NP					
B-3	18+62.0 48 ft. LT.	S-4 to 8	4.5 to 12.0	21.1	7.1	25.2	1.6	23.6	67.7	48.3	19.4	A-4	CL		31	21	10					
B-3	18+62.0 48 ft. LT.	S-9 to 15	12.0 to 22.5	27.8	7.2	25.0	0.3	24.7	67.8	51.2	16.6	A-4	ML		NP	NP	NP					

GENERAL NOTES

THIS SHEET IS INCLUDED FOR THE CONVENIENCE OF THE DEPARTMENT. REFER TO PUBLICATION 408 SECTION 102.05 FOR FURTHER INFORMATION.

FOR ADDITIONAL SOIL AND ROCK DESCRIPTIONS SEE PUBLICATION 222.

THE BORING LOGS AND RELATED INFORMATION DEPICT SUBSURFACE CONDITIONS ONLY AT THE SPECIFIC LOCATIONS AND DATES INDICATED. SUBSURFACE CONDITIONS MAY DIFFER FROM THE CONDITIONS REPORTED AT THE SPECIFIC LOCATIONS. ALSO, THE PASSAGE OF TIME MAY RESULT IN A CHANGE OF CONDITIONS AT THE BORING LOCATIONS.

LEGEND

PP POCKET PENETROMETER
TOR TOP OF ROCK ELEVATION

Prepared By:

COMMONWEALTH OF PENNSYLVANIA
REGISTERED PROFESSIONAL
ADAM J. MADAR
ENGINEER
No. PE089732

AMERICAN GEOTECHNICAL & ENVIRONMENTAL SERVICES, INC.

COMMONWEALTH OF PENNSYLVANIA
DEPARTMENT OF TRANSPORTATION

CLEARFIELD COUNTY
SR 1001 SECTION MTF
SEG 0132 OFFSET 0701
CR 65.60 (CRESSON BRANCH) STA 4+65.11
OVER SR 1001 (RIVER ROAD)
STEEL THROUGH PLATE GIRDER & STEEL THROUGH TRUSS BRIDGE
STRUCTURE BORINGS (SHEET 4 OF 4)

M:_2022\040\exhibits\structure\22040_strb.dgn
3/23/2023

PLT: RJS | CKD: KDA | QA/QC: AM