PROPOSED PERPENDICULAR AERIAL CROSSING
CSX @ CHICHESTER AVE
NEW VERIZON FIBER OPTIC CROSSING

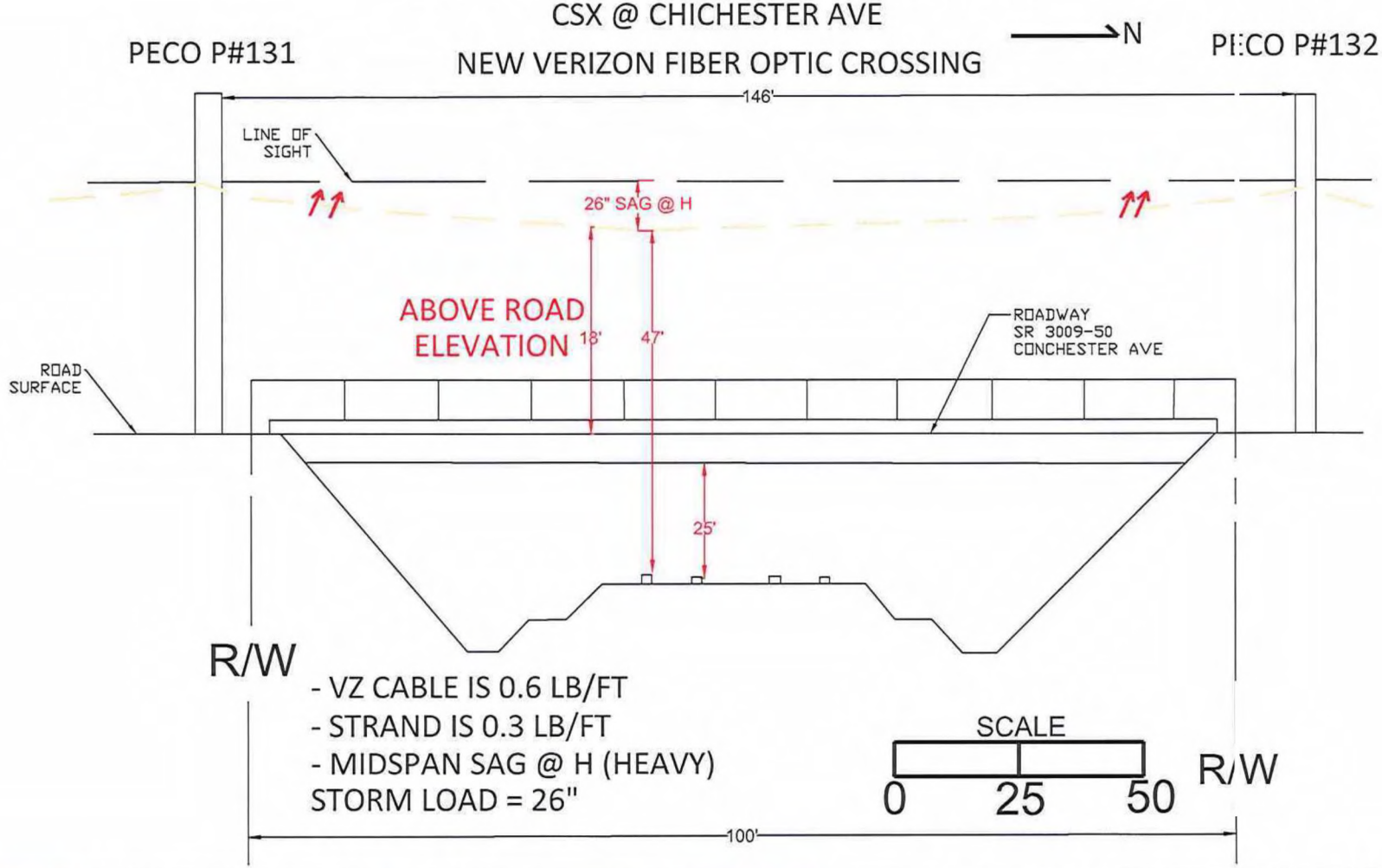

- VZ CABLE IS 0.6 LB/FT
- STRAND IS 0.3 LB/FT
- MIDSPAN SAG @ H (HEAVY)

STORM LOAD = 26"

LEGEND: (PROPOSED ——) , (EXISTING ——)									
YYY BOX			CORNING CLEAR TRACK SSB	CT	CT	CONDUIT			
COYOTE BOX	C	C	COLLECTOR PLATE	CP	CP	EMT			
S-ONE BOX	S1	S1	CORE DRILL			FIBER CABLE/FDT TAIL STUB			
FIBER DISTRIBUTION HUB			ELECTRIC OUTLET			FUTUREPATH			
FIBER DISTRIBUTION TERMINAL	#	#	FIBER DROP RISER	R	R	IPP/SWID			
HANDHOLE	H	H	ONT			MICRODUCT			
MANHOLE	M	M	PENETRATION POINT			PLASTIC MOLDING			
SLACK STORAGE BOX	S	S	POLE			CORNING CLEAR TRACK			

VERIZON FTTP DETAIL ENGINEERING SURVEY

PROPOSED PERPENDICULAR AERIAL CROSSING
BOOTHWYN, PA 19013

BUILDING CONTACT:
WIRE CENTER: **CHES-B**
CONSTRUCTION TYPE: **RR PERMIT** GEO CODE:
COUNTY: **UPPER CHICHESTER TWNSHP** MAP: GRID:

DRAWN & ENGINEERED BY:

PIKE TELECOM
740 Springdale Dr.
Exton, PA 19341
www.piketelecom.org
1-508-337-7600

WORK ORDER #: **1A6PA1P**

SHEET: 1 OF 2

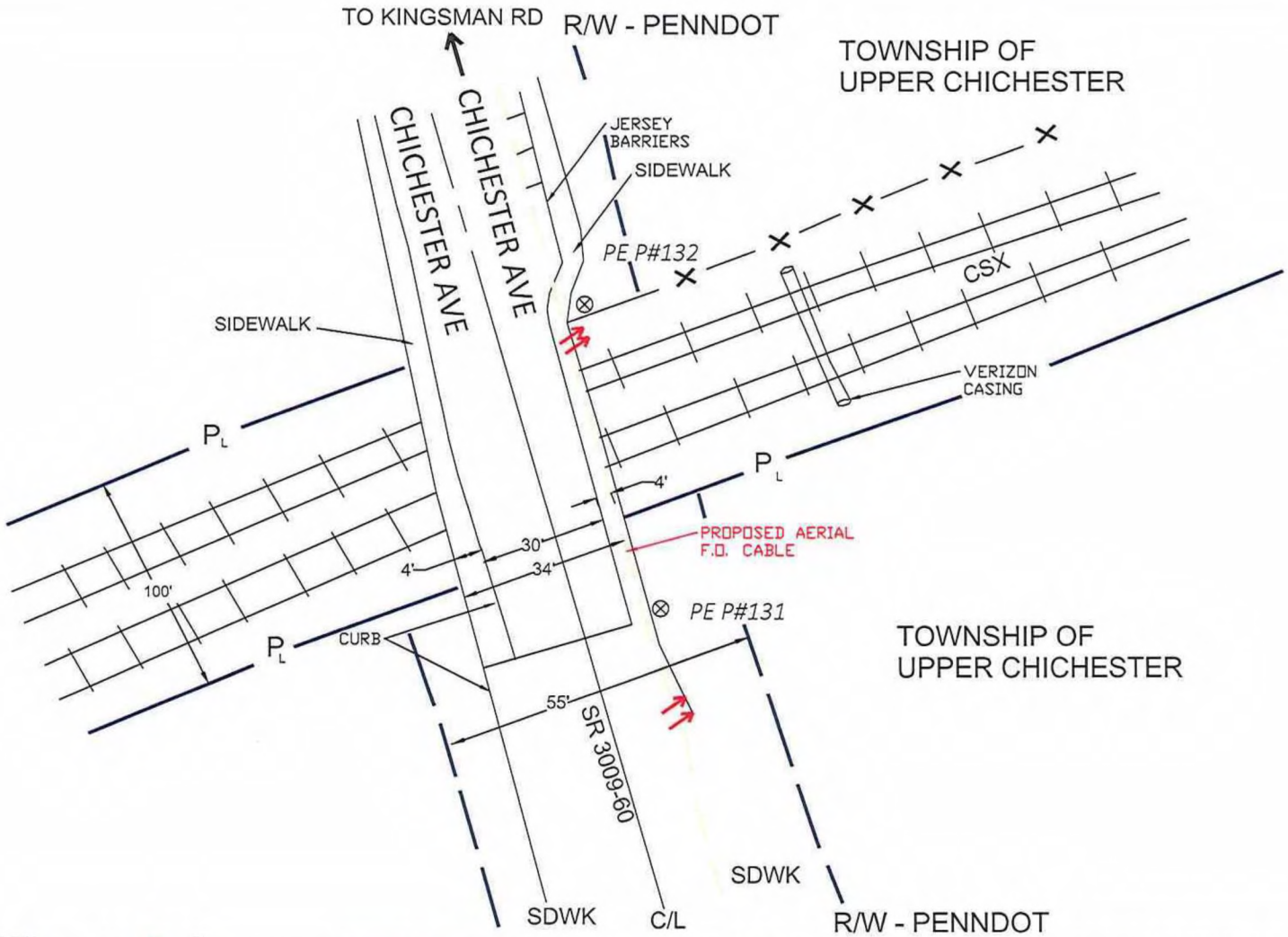

LEGEND: (PROPOSED ———), (EXISTING ———)										
YYY BOX			CORNING CLEAR TRACK SSB	CT	CT	CONDUIT				
COYOTE BOX	C	C				EMT				
S-ONE BOX	S1	S1	CORE DRILL			FIBER CABLE/FDT TAIL STUB				
FIBER DISTRIBUTION HUB			ELECTRIC OUTLET			FUTUREPATH				
FIBER DISTRIBUTION TERMINAL	#	#	FIBER DROP RISER	R	R	IPP/SWID				
HANDHOLE	H	H	ONT			MICRODUCT				
MANHOLE	M	M	PENETRATION POINT			PLASTIC MOLDING				
SLACK STORAGE BOX	S	S	POLE			CORNING CLEAR TRACK				

VERIZON FTTP DETAIL ENGINEERING SURVEY

PROPOSED PERPENDICULAR AERIAL CROSSING
BOOTHWYN, PA 19013

BUILDING CONTACT:
WIRE CENTER: **CHES-B**
CONSTRUCTION TYPE: **RR PERMIT** GEO CODE:
COUNTY: **UPPER CHICHESTER TWNSHP** MAP: GRID:

DRAWN & ENGINEERED BY:

PIKE TELECOM
740 Springdale Dr.
Exton, PA 19341
www.piketelecom.org
1-508-337-7600

WORK ORDER #:
1A6PA1P

SHEET: 2 OF 2