DISTRICT	COUNTY	TOWNSHIP	BOROUGH	CITY	ROUTE	SECTION	TOTAL SHEETS
8-0	DAUPHIN			HARRISBURG	0083	OCS	29

ECMS NO. 121921

ALSO INCLUDED
ELECTRIC TRACTION PLAN 77 SHEETS

COMMONWEALTH OF PENNSYLVANIA

DEPARTMENT OF TRANSPORTATION

DRAWINGS
FOR
CONSTRUCTION
OF

STATE ROUTE 0083 SECTION OCS
IN DAUPHIN COUNTY

SR 0083 (NB) FROM STA. 230+00.00 TO STA. 241+50.00 LENGTH 1,000.00 FT. 0.189 MI.
FROM SEG. 0424 OFFSET 0007 TO SEG. 0424 OFFSET 1157

SR 0083 REESTABLISHED AS LIMITED ACCESS HIGHWAY FROM STATION 229+43.53 NB TO STATION 243+23.26 NB BY PLAN OF LR 767 SECTION A14 R/W(B), APPROVED ON SEPTEMBER 10, 1976.

SR 0083 REESTABLISHED AS LIMITED ACCESS HIGHWAY FROM STATION 231+16.92 TO STATION 236+80.44 NB BY PLAN OF SR 0083 SEC 094 R/W, APPROVED ON .....

PUC DOCKET NO.
DOCKET# A-2021-3028010 STA 236+43.52 AND STA 237+70.59

SCALE

HORIZONTAL 0 25 50 FEET

VERTICAL 0 5 10 FEET

DESIGN DESIGNATION - SR 0083

		TRAFFIC DATA	
HIGHWAY CLASSIFICATION	- URBAN INTERSTATE	CURRENT A.D.T.	- 44,162 (2025)
DESIGN SPEED	- 60 MPH	DESIGN YEAR A.D.T.	- 84,906 (2050)
PAVEMENT WIDTH	- 3 TO 5 - 12' LANES	D.H.V.	- 9,340 (2050)
SHOULDER WIDTH	- VARIES 12' TO 14'	D	- 60 %
SHOULDER WIDTH	- N/A	T	- 14 %

CERTIFIED CORRECT PLANS
Professional Engineer
Approved by Bureau of Technical Utility Services
PA PUBLIC UTILITY COMMISSION
ATTEST Secretary
07/17/2025
Docket: A-2021-3028010

PREPARED BY:
HNTB CORPORATION
4507 NORTH FRONT STREET
SUITE 300
HARRISBURG, PA 17110

COMMONWEALTH OF PENNSYLVANIA
REGISTERED PROFESSIONAL
JOACHIM J. ALFIERI
ENGINEER
039743-E

JOACHIM J. ALFIERI, PE
DATE: 06/12/2025

marwa said
RECOMMENDED DATE: 6/12/2025
PROJECT MANAGER

RECOMMENDED DATE: 7/1/2025
DISTRICT EXECUTIVE

RECOMMENDED DATE: 07/01/2025
Christine Norris
DEPUTY SECRETARY

APPROVED DATE: 07/01/2025
SECRETARY OF TRANSPORTATION
(ON BEHALF OF THE GOVERNOR AS WELL AS THE SECRETARY)

DISTRICT	COUNTY	ROUTE	SECTION	SHEET
8-0	DAUPHIN	0083	OCS	2 OF 29
CITY OF HARRISBURG				

REVISION NUMBER	REVISIONS	DATE	BY

SHEET INDEX BLOCK	
DESCRIPTION	SHEET
TITLE SHEET	1
INDEX MAP	2
GENERAL NOTES/LOCATION MAP	3 TO 5
COORDINATE TABLES & GEOMETRY SHEETS	6 TO 7
DETAILS	8 TO 16
SUMMARY AND TAB SHEETS	17 TO 20
PLAN SHEETS	21 TO 28
PROFILES	29

LEGEND

- PLAN
- PROFILE
- PARCEL IDENTIFICATION NUMBER
- PARCEL IDENTIFICATION NUMBER - NO TAKE

TABULATION OF SEGMENT EQUALITIES

SR 0083 NB
SEG 0424 OFFSET 0000 = STA 229+93.04

59	NATIONAL RAILROAD PASSENGER CORPORATION
60	PENNSY SUPPLY INC., A PENNSYLVANIA CORPORATION
61	PENNSYLVANIA LINES LLC, A DELAWARE LIMITED LIABILITY COMPANY, AND WHOLLY OWNED SUBSIDIARY
64	PHOENIX ASSOCIATES, A PENNSYLVANIA PARTNERSHIP
67	MICHAEL A. SERLUCO

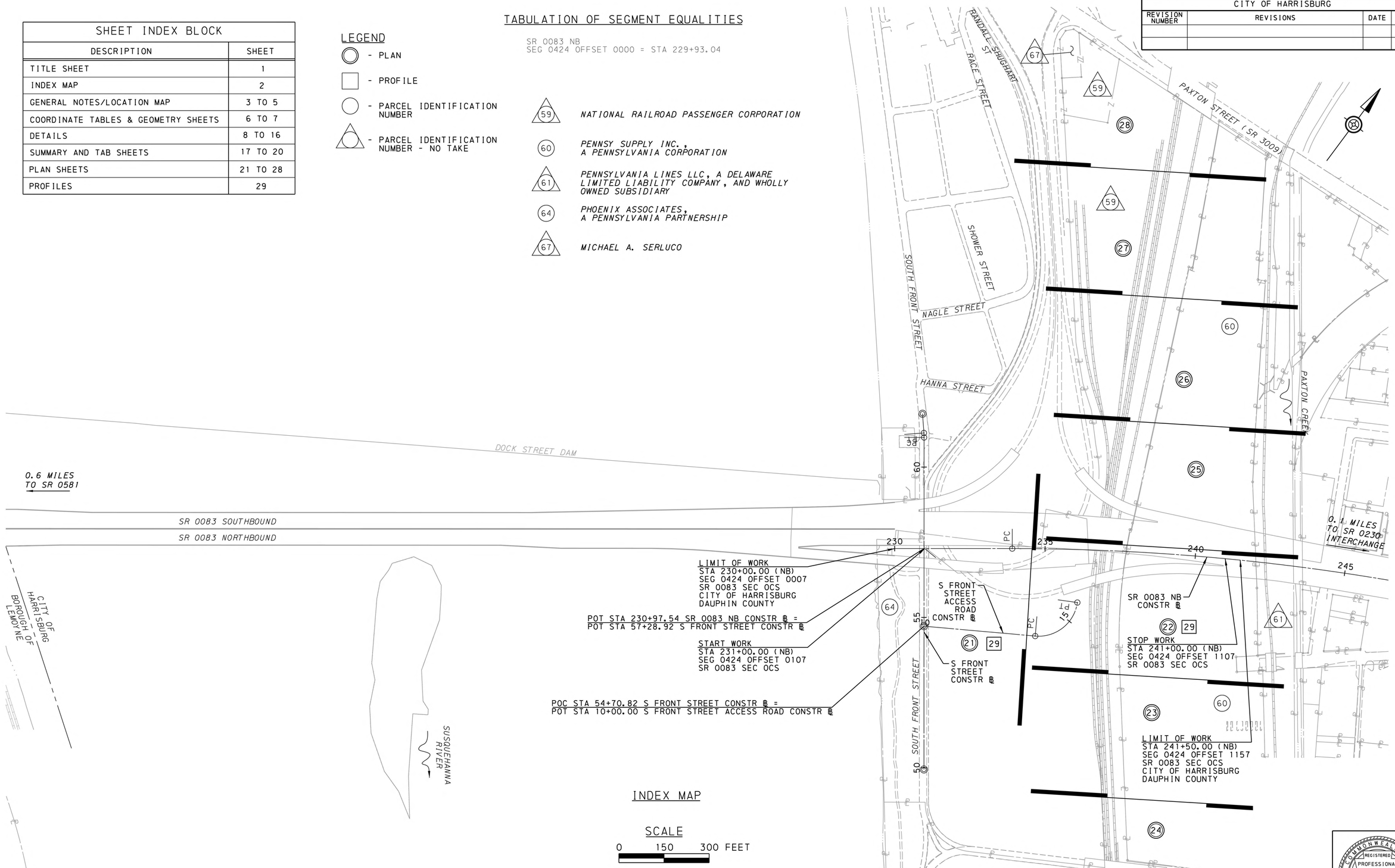

INDEX MAP

SCALE
0 150 300 FEET

COMMONWEALTH OF PENNSYLVANIA
REGISTERED PROFESSIONAL
JOACHIM J. ALFIERI
ENGINEER
039743-E

7/2/2025
FILENAME: 43377-OCS-s-cv-idx01.dgn

DISTRICT	COUNTY	ROUTE	SECTION	SHEET
8-O	DAUPHIN	0083	OCS	3 OF 29
CITY OF HARRISBURG				

REVISION NUMBER	REVISIONS	DATE	BY

LIST OF PUBLIC UTILITIES

——W——
——S——
CAPITAL REGION WATER
MR. JEFF BOWRA
3003 NORTH FRONT STREET
HARRISBURG, PA 17110
TELEPHONE: 717-525-7677
EMAIL: JEFF.BOWRA@CAPITALREGIONWATER.COM

(DESIGN)
MICAELA SWART
TELEPHONE: 717-585-5276
EMAIL: MICAELA.SWART@CAPITALREGIONWATER.COM

(CONSTRUCTION)
CALEB KRAUTER
TELEPHONE: 717-333-1518
EMAIL: CKRAUTER@HRB-INC.COM

——FO——
ZAYO GROUP LLC
MR. JAMES JACOBSEN
1101 LINDEN AVE
LINDEN, NJ 07036
TELEPHONE: 973-214-6393
EMAIL: JAMES.JACOBSEN@ZAYO.COM

JARRETT REIDNAUER
TELEPHONE: 610-655-2531
EMAIL: JARETT.REIDNAUER@ZAYO.COM

——CTV——
COMCAST CABLE COMMUNICATIONS, INC.
MR. WILLIAM MCMILLEN
4601 SMITH STREET
HARRISBURG, PA 17109
TELEPHONE: 717-298-6450
EMAIL: WILLIAM_MCMILLEN@COMCAST.COM

——FOU——
VERIZON BUSINESS
MR. SCOTT DREILING
630 CLARK AVENUE
KING OF PRUSSIA, PA 19406
TELEPHONE: 610-842-4323
EMAIL: SCOTT.J.DREILING@VERIZON.COM

JOHN ALESSANDRINI
TELEPHONE: 610-290-4003
EMAIL:
JOHN.ALESSANDRINI@VERIZONBUSINESS.COM

——EU——
——E——
PPL ELECTRIC UTILITIES CORP.
MS. CHARLOTTE KRUPA
2 NORTH 9TH STREET
ALLENTOWN, PA 18101
TELEPHONE: 610-774-6287
EMAIL: CAKRUPA@PPLWEB.COM

——EU2——
PENNDOT UNDERGROUND ELECTRIC

THE PA ONE CALL NOTIFICATIONS PREFORMED DURING PROJECT DEVELOPMENT ARE AS FOLLOWS:

PRELIMINARY DESIGN: SERIAL NO. 20242552173 ON 09/11/2024 FOR THE CITY OF HARRISBURG.

FINAL DESIGN: SERIAL NO. 20251550471 ON 06/04/2025 FOR THE CITY OF HARRISBURG.

SEE SPECIAL PROVISION 9000-0018 FOR PA ONE CALL PROCEDURES TO FACILITATE PUBLIC UTILITY MARKOUTS ON RAILROAD PROPERTY.

AMTRAK UTILITIES ARE NOT INCLUDED IN PA ONE CALL TICKETS. CONTRACTOR TO COORDINATE WITH AMTRAK PRIOR TO EXCAVATION FOR POSSIBLE AMTRAK MARKOUTS.

CONTRACTOR TO FOLLOW, BUT NOT LIMITED TO, EP 3014 FOR EXPLORATORY TRENCEHS WITHIN RAILROAD PROPERTY TO LOCATE RAILROAD UTILITIES PRIOR TO EXCAVATION. THESE TRENCHES ARE PAID UNDER EXPLORATORY TRENCHING (ITEM 9000-0024).

LIMIT OF WORK
STA 241+50.00
SEG 0424 OFFSET 1157
SR 0083 SEC OCS
CITY OF HARRISBURG
DAUPHIN COUNTY

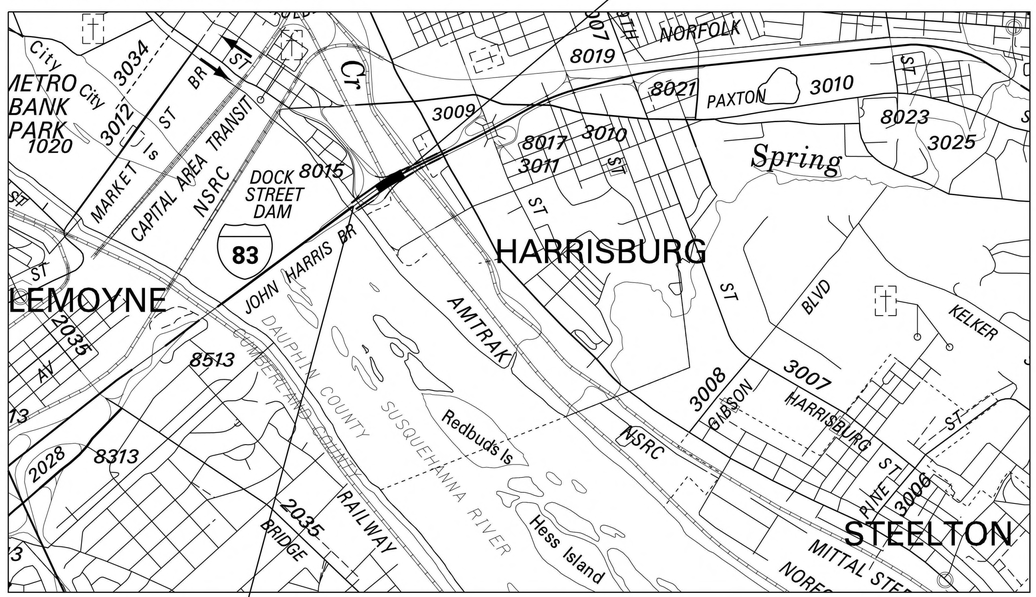

LIMIT OF WORK
STA 230+00.00
SEG 0424 OFFSET 0007
SR 0083 SEC OCS
CITY OF HARRISBURG
DAUPHIN COUNTY

LOCATION MAP
SCALE IN MILES
0.5 0 0.5 1

LEGEND
- PROJECT
- STATE HIGHWAY
- LOCAL ROAD
- MUNICIPAL BOUNDARY
- RAILROAD TRACKS

TABULATION OF OVERALL LENGTH

SR 0083 NB ℞ STA 230+00.00 TO STA 241+50.00 = 1,150.00 FT = 0.218 MI

TOTAL LENGTH = 0.218 MI

TABULATION OF CONSTRUCTION LENGTH

SR 0083 NB ℞ STA 231+00.00 TO STA 241+00.00 = 1,000.00 FT = 0.189 MI

TOTAL LENGTH = 0.189 MI

EQUALITIES

NONE

GENERAL NOTES

THE SURVEY IS BASED ON THE NATIONAL GEODETIC REFERENCE SYSTEM.

HORIZONTAL DATUM: PA STATE PLANE - SOUTH ZONE NAD83 (2011).

VERTICAL DATUM FOR THIS PLAN IS BASED ON THE NORTH AMERICAN VERTICAL DATUM OF 1988 (NAVD 88).

THE COMBINED FACTOR USED TO OBTAIN THE PROJECT COORDINATES IS 0.999919034 X GROUND DISTANCE.

DO NOT INTERFERE WITH THE OPERATIONS OF ANY FIRE HYDRANT, FIRE CALL BOX OR POLICE CALL BOX.

THIS IS A FEDERAL-AID PROJECT AND AS SUCH IS SUBJECT TO INSPECTION BY REPRESENTATIVES OF THE FEDERAL HIGHWAY ADMINISTRATION, FEDERAL TRANSIT ADMINISTRATION, AND THE PENNSYLVANIA DEPARTMENT OF TRANSPORTATION.

ALL ROADWAY CURVES USE THE ARC DEFINITION, UNLESS OTHERWISE INDICATED.

ALL RAILWAY CURVES USE THE CHORD DEFINITION, UNLESS OTHERWISE INDICATED.

THREE TO TEN WORKING DAYS PRIOR TO EXCAVATION BASED ON THE COMPLEXITY OF THE PROJECT, THE CONTRACTOR MUST CONTACT THE PA ONE CALL SYSTEM, INC., PHONE 1-800-242-1776, SERIAL NO. _____ FOR THE CITY OF HARRISBURG.
ADDITIONAL INFORMATION IS AVAILABLE AT
https://www.paicall.org/PA811/Public/.

THE CONTRACTOR IS REQUIRED TO NOTIFY THE DEPARTMENT AND SUBMIT AN ALLEGED VIOLATION REPORT (AVR) TO THE PA PUBLIC UTILITY COMMISSION THROUGH THE PA ONE CALL SYSTEM, WWW.PAICALL.ORG, WITHIN TEN (10) BUSINESS DAYS AFTER A UTILITY LINE IS STRUCK, DAMAGED, OR PREVIOUS DAMAGE IS DISCOVERED AS REQUIRED BY PENNSYLVANIA'S UNDERGROUND UTILITY LINE PROTECTION LAW ACT 50 (P.L.852, NO. 287 AMENDED OCT. 30, 2017).

THE DEPARTMENT OF TRANSPORTATION DOES NOT GUARANTEE THE ACCURACY OF THE LOCATION OF EXISTING SUBSURFACE UTILITY STRUCTURES SHOWN ON THE PLANS, NOR DOES THE DEPARTMENT GUARANTEE THAT ALL SUBSURFACE STRUCTURES ARE SHOWN.

GENERAL NOTES CONTINUED ON NEXT SHEET

EARTHWORK SUMMARY ENTIRE PROJECT

THE INFORMATION ON ESTIMATED AMOUNTS OF EARTHWORK HAS BEEN USED IN THE PRELIMINARY ESTIMATE. DO NOT USE AS A WAIVER OF ANY PROVISIONS OF THE SPECIFICATIONS AND CONTRACTS.

CUBIC YARDS OF EXCAVATION						CUBIC YARDS OF COMPLETED EMBANKMENT*	CUBIC YARDS OF BORROW EXCAVATION	CUBIC YARDS OF SELECT BORROW	CUBIC YARDS OF WASTE
CLASS 1 Δ	CLASS 1A	CLASS 1B	CLASS 2	CLASS 3**	CLASS 4				
1,649				90		17			25

* INCLUDES ALL BORROW ITEMS
** FOUNDATION DRILLING SPOILS, SEE SPECIAL PROVISIONS.
Δ INCLUDES 1,615 CY OF MATERIAL FROM AMTRAK PROPERTY, SEE SPECIAL PROVISIONS.

COMMONWEALTH OF PENNSYLVANIA
REGISTERED PROFESSIONAL
JOACHIM J. ALFIERI
ENGINEER
039743-E

7/2/2025
FILENAME: 43377-OCS-s-cv-gn101.dgn

DISTRICT	COUNTY	ROUTE	SECTION	SHEET
8-0	DAUPHIN	0083	OCS	4 OF 29
CITY OF HARRISBURG				

REVISION NUMBER	REVISIONS	DATE	BY

GENERAL NOTES (CONTINUED)

THE LEGAL RIGHT-OF-WAY FOR LIMITED ACCESS ON SR 0083, FORMERLY LR 767 IS VARIABLE IN WIDTH FROM NB STATION 229+43.53 TO NB STATION 243+23.26, BASED ON PLAN OF LR 767 SECTION A14 R/W(B) APPROVED ON SEPTEMBER 10, 1976 AND RECORDED IN THE DAUPHIN COUNTY COURT HOUSE ON SEPTEMBER 28, 1976 IN PLAN BOOK F, PAGE 88, AND INDEXED BY ROUTE NUMBER IN THE HIGHWAY PLANS DRAWER OF THE MICROFICHE CABINET.

THE LEGAL RIGHT-OF-WAY FOR LIMITED ACCESS ON SR 0083, FORMERLY LR 767 IS VARIABLE IN WIDTH FROM NB STATION 231+16.92 TO NB STATION 236+80.44, BASED ON PLAN OF SR 0083 SEC 094 R/W APPROVED ON XXXX XX, 2025 AND RECORDED IN THE DAUPHIN COUNTY COURT HOUSE ON XXXX XX, 2025 IN PLAN BOOK X.

THE LEGAL RIGHT-OF-WAY ON SYCAMORE STREET (CITY STREET) IS 60.00 FEET IN WIDTH, BASED ON PLAN OF LR 767 SECTION A14 R/W(B) SIGNED ON OCTOBER 8, 1974, AND RECORDED IN THE DAUPHIN COUNTY COURT HOUSE ON SEPTEMBER 28, 1976 IN PLAN BOOK F, PAGE 88, AND INDEXED BY ROUTE NUMBER IN THE HIGHWAY PLANS DRAWER OF THE MICROFICHE CABINET.

THE LEGAL RIGHT-OF-WAY ON SR 3009, FORMERLY LR 129 IS 80 FEET IN WIDTH BASED ON CITY OF HARRISURG WARD MAPS, INDEX NOS. 1-47, 2-8, AND 2-63.

SR 0083 IS A NHS ROUTE FROM STATION 229+43.52 NB TO STATION 243+23.26 NB.

+00
00' THE HALF CIRCLED NUMBER INDICATES A SCALED DIMENSION.

+00.00
00.00' INDICATES PROPOSED MONUMENTED DIMENSIONS

TEMPORARY CONSTRUCTION EASEMENT. AN EASEMENT TO USE THE LAND AS NECESSARY DURING CONSTRUCTION OF THE PROJECT. THE EASEMENT IS REQUIRED ONLY UNTIL THE CONSTRUCTION OR WORK INDICATED BY THE PLAN IS COMPLETED, UNLESS SOONER RELINQUISHED IN WRITING BY THE DEPARTMENT.

SLOPE EASEMENT. AN EASEMENT FOR THE SUPPORT AND PROTECTION OF THE HIGHWAY, INCLUDING THE RIGHT TO CONSTRUCT, INSPECT, MAINTAIN, REPAIR, RECONSTRUCT AND ALTER DRAINAGE FACILITIES AND THE CONTOUR OF THE LAND. THE EASEMENT SHALL NOT PREVENT THE PROPERTY OWNER FROM MAKING ANY LEGAL USE OF THE AREA WHICH IS NOT DETRIMENTAL TO THE NECESSARY SUPPORT AND PROTECTION OF THE HIGHWAY RIGHT-OF-WAY AND THE SAFETY OF THE TRAVELING PUBLIC.

DRAINAGE EASEMENT. AN EASEMENT FOR THE CONSTRUCTION, INSPECTION, MAINTENANCE, REPAIR, RECONSTRUCTION AND ALTERATION OF HIGHWAY DRAINAGE FACILITIES. THE EASEMENT SHALL NOT PREVENT THE PROPERTY OWNER FROM MAKING ANY LEGAL USE OF THE AREA WHICH IS NOT DETRIMENTAL TO THE NECESSARY FLOW OF WATER. HOWEVER, NO STRUCTURE OF ANY KIND MAY BE ERECTED IN THE AREA, NOR MAY ANY PIPE OR DITCH BE CONNECTED TO THE DEPARTMENT'S PIPE OR DITCH WITHOUT ADVANCED WRITTEN APPROVAL BY THE DEPARTMENT OF TRANSPORTATION.

FOR THE AERIAL EASEMENT DEFINITION, SEE GENERAL NOTES, SHEET 5 OF 29.

GENERAL NOTES (CONTINUED)

THIS WORK CONSISTS OF THE MAINTENANCE OF TRAFFIC AND THE PROTECTION OF THE TRAVELING PUBLIC APPROACHING THE CONSTRUCTION AREA AND WITHIN THE LIMITS OF CONSTRUCTION.

FURNISH, ERECT, PLACE, AND MAINTAIN TRAFFIC CONTROL SIGNS AND DEVICES AND MAINTAIN TRAFFIC DURING HOURS OF CONSTRUCTION AND AT ALL OTHER TIMES IN ACCORDANCE WITH THE METHODS INDICATED ON THESE DRAWINGS AND IN THE MOST CURRENT EDITION OF:

1. THE SPECIAL PROVISIONS OF THE CONTRACT.
2. PA. CODE, TITLE 67, CHAPTER 212, OFFICIAL TRAFFIC CONTROL DEVICES.
3. PENNDOT PUBLICATION 213, TEMPORARY TRAFFIC CONTROL GUIDELINES.
4. PENNDOT PUBLICATION 35, APPROVED CONSTRUCTION MATERIALS (BULLETIN 15).
5. PENNDOT PUBLICATION 408, SPECIFICATIONS.
6. FEDERAL HIGHWAY ADMINISTRATION MANUAL ON UNIFORM TRAFFIC CONTROL DEVICES (MUTCD).
7. PENNDOT PUBLICATION 236, HANDBOOK OF APPROVED SIGNS.
8. PENNDOT PUBLICATION 111, TRAFFIC CONTROL PAVEMENT MARKINGS AND SIGNING STANDARDS

IMMEDIATELY UPON COMPLETION OF WORK, REMOVE THE DEVICES. THE DEPARTMENT WILL REMOVE ANY TRAFFIC CONTROL DEVICES ERECTED BY DEPARTMENT FORCES.

COVER OR REMOVE FROM ALL SIGNS NOT IN USE.

ALL SIGNS AND DEVICES ARE TO BE IN NEW CONDITION AND MAINTAINED AS SUCH.

DETAILS, OTHER THAN THOSE INDICATED, ARE ON THE FOLLOWING STANDARD DRAWINGS:

RC-10M	JUN. 1, 2010
RC-13M	JUN. 1, 2010
RC-60M	JUN. 1, 2010
RC-61M	JUN. 1, 2010
RC-64M	FEB. 19, 2021
RC-67M	FEB. 19, 2021
RC-70M	FEB. 8, 2019
RC-72M	FEB. 8, 2019
RC-73M	FEB. 8, 2019
RC-75M	JUN. 1, 2010
RC-77M	DEC. 17, 2019
RC-78M	FEB. 8, 2019
RC-92M	JUN. 1, 2010
TC-8702B	JUN. 13, 2013
TC-8716	JUN. 13, 2013
TC-8717	JUN. 13, 2013

TABULATION OF TRAFFIC CONTROL DEVICES INCLUDED IN ITEM 0901-0001

(FOR INFORMATION ONLY)

SERIES DESIGNATION	DESCRIPTION	SIZE ▲	PLAN	SHORT-TERM TRAFFIC CONTROL		
				PATA 102	PATA 103*	PATA 202C*
W5-5	LANE SHIFT	36"X36"	-	-	1	1
W20-1	ROAD WORK	36"X36"	-	1	1	1
W25-5	CONSTRUCTION ENTRANCE AHEAD	36"X36"	2	-	-	-
W30-1-6	DISTANCE PANEL (AHEAD)	36"X36"	-	-	-	2
G20-2	END ROAD WORK	36"X18"	-	-	-	1
-	CHANNELIZING DEVICE	EACH	10	15	17	22
-	TYPE III BARRICADES	EACH	2	2	3	6

▲ THE SIZES SHOWN ARE MINIMUM REQUIREMENTS

* S FRONT STREET IS UNIDIRECTIONAL

COMMONWEALTH OF PENNSYLVANIA
REGISTERED PROFESSIONAL
JOACHIM J. ALFIERI
ENGINEER
039743-E

7/2/2025
FILENAME: 43377-OCS-s-cv-gn102.dgn

DISTRICT	COUNTY	ROUTE	SECTION	SHEET
8-0	DAUPHIN	0083	OCS	5 OF 29
CITY OF HARRISBURG				

REVISION NUMBER	REVISIONS	DATE	BY

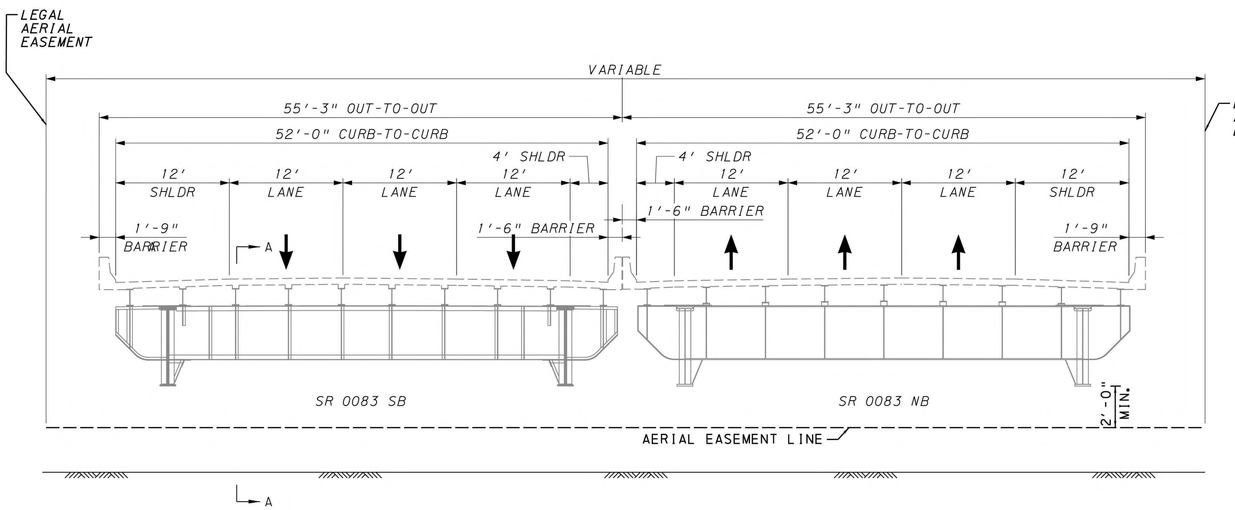

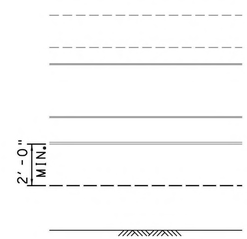

SECTION A-A

AERIAL EASEMENT NOTES:

USE OF AIRSPACE BENEATH THE ESTABLISHED GRADELINE OF THE HIGHWAY SHALL PROVIDE SUFFICIENT VERTICAL AND HORIZONTAL CLEARANCES FOR THE CONSTRUCTION, OPERATION, MAINTENANCE, VENTILATION AND SAFETY OF THE HIGHWAY FACILITY. THE ESTATE ACQUIRED ABOVE THE AERIAL EASEMENT LINE MAY BE ENTERED ON BY MOVING VEHICLES SUCH AS TRUCKS OR RAILROAD ROLLING STOCK.

WHERE AN AERIAL EASEMENT IS ACQUIRED, IT SHALL INCLUDE AN EASEMENT IN THE AIR FOR THE ACCOMMODATION OF THE ELEVATED HIGHWAY STRUCTURE UNLIMITED IN VERTICAL DIMENSION ABOVE THE STRUCTURE, A SURFACE EASEMENT UNLIMITED IN VERTICAL DIMENSION FOR THE ACCOMMODATION OF PIERS AND OTHER APPURTENANCES AND A TEMPORARY EASEMENT FOR CONSTRUCTION PURPOSES INCLUDING THE STORAGE OF MATERIALS DURING CONSTRUCTION FOR THE ENTIRE AREA. THE FOLLOWING LIMITATIONS SHALL BE IMPOSED ON THE PROPERTY BENEATH THE AREA AFFECTED BY THE AERIAL EASEMENT.

1. NO USE SHALL BE MADE OF THE PROPERTY WHICH SHALL ENDANGER THE STRUCTURE OR THE HEALTH, SAFETY OR WELFARE OF THE TRAVELING PUBLIC.

2. NO FLAMMABLE, EXPLOSIVE, DANGEROUS OR HAZARDOUS MATERIAL SHALL BE USED, PLACED OR STORED ON THE PROPERTY.

3. NO BUILDING OR OTHER FACILITY SHALL BE CONSTRUCTED ON THE PROPERTY WITHOUT PRIOR AUTHORITY OF THE DEPARTMENT OF TRANSPORTATION. IF AND WHEN SUCH AUTHORITY IS GRANTED, THE PLANS FOR THE BUILDING OR FACILITY AND CONSTRUCTION METHODS SHALL BE SUBJECT TO THE APPROVAL OF THE DEPARTMENT OF TRANSPORTATION.

4. NO INTERFERENCE SHALL BE MADE WITH THE RIGHT OF THE DEPARTMENT OF TRANSPORTATION TO ENTER UPON THE PROPERTY FOR THE PURPOSES OF INSPECTION, MAINTENANCE, REPAIR, PAINTING, RECONSTRUCTION OR ALTERATION OF THE STRUCTURE OR APPURTENANCES. MOVEABLE ITEMS MAY HAVE TO BE REMOVED BY THE OWNER DURING SOME OR ALL OF THE ABOVE OPERATIONS.

5. ANY SUBSTANTIAL CHANGE IN PROPERTY USE TO BE MADE SUBSEQUENT TO THE ACQUISITION OF THE EASEMENT SHALL BE SUBJECT TO THE APPROVAL OF THE DEPARTMENT OF TRANSPORTATION.

6. THE NOTES ON THESE DRAWINGS SHALL NOT BE CONSTRUED AS LIMITING OR INTERFERING IN ANY WAY WITH THE PRESENT AND FUTURE OPERATION, USE, MAINTENANCE, REPAIR, RENEWAL, CHANGE, ADDITION, BETTERMENT OR ALTERATION OF THE RAILROAD AND ITS SUPPORTING FACILITIES.

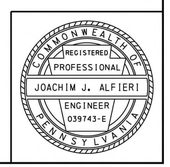

7/2/2025
FILENAME: 43377-OCS-s-cv-gn103.dgn

DISTRICT	COUNTY	ROUTE	SECTION	SHEET
8-0	DAUPHIN	0083	OCS	6 OF 29
CITY OF HARRISBURG				

REVISION NUMBER	REVISIONS	DATE	BY

SUMMARY OF TRAVERSE CONTROL POINT COORDINATES

BASED ON PENNSYLVANIA STATE PLANE COORDINATE SYSTEM (SOUTH ZONE), NORTH AMERICAN DATUM (NAD) 1983 (2011)

POINT	COORDINATES		DESCRIPTION
	NORTH	EAST	
TP-401	336186.1631	2213269.9710	BM
TP-420	335332.7470	2213397.0280	TPRBR
TP-422	335508.3890	2213479.4850	TPNAIL
TP-423	335661.1990	2213708.7470	TPNAIL
TP-424	335595.3810	2213462.1460	TPRBR
TP-425	335683.4410	2213588.4100	TPRBR
TP-426	335492.4120	2213324.7860	TPDH
TP-427	335315.8060	2213289.9610	TPMAG
TP-428	335777.9750	2213730.7590	TPRBR
TP-429	335898.5910	2213927.6230	TPDH
TP-430	335757.4000	2214109.6520	TPMAG
TP-431	336043.2690	2214183.0040	TPDH
TP-432	336153.4800	2214636.8400	TPMAG
TP-767	336188.7364	2214582.8010	TPRBR
TP-769	336165.1866	2214457.8510	TPDH
TP-805	336334.4950	2214264.4360	TPRBR
TP-1004	336007.0360	2214755.1500	BM
TP-1030	335348.4400	2213429.7900	BM

NOTE: FOUR (4) PLACE COORDINATES ARE FOR COMPUTATIONAL PURPOSES ONLY AND DO NOT IMPLY A PRECISION BEYOND TWO (2) DECIMAL PLACES.

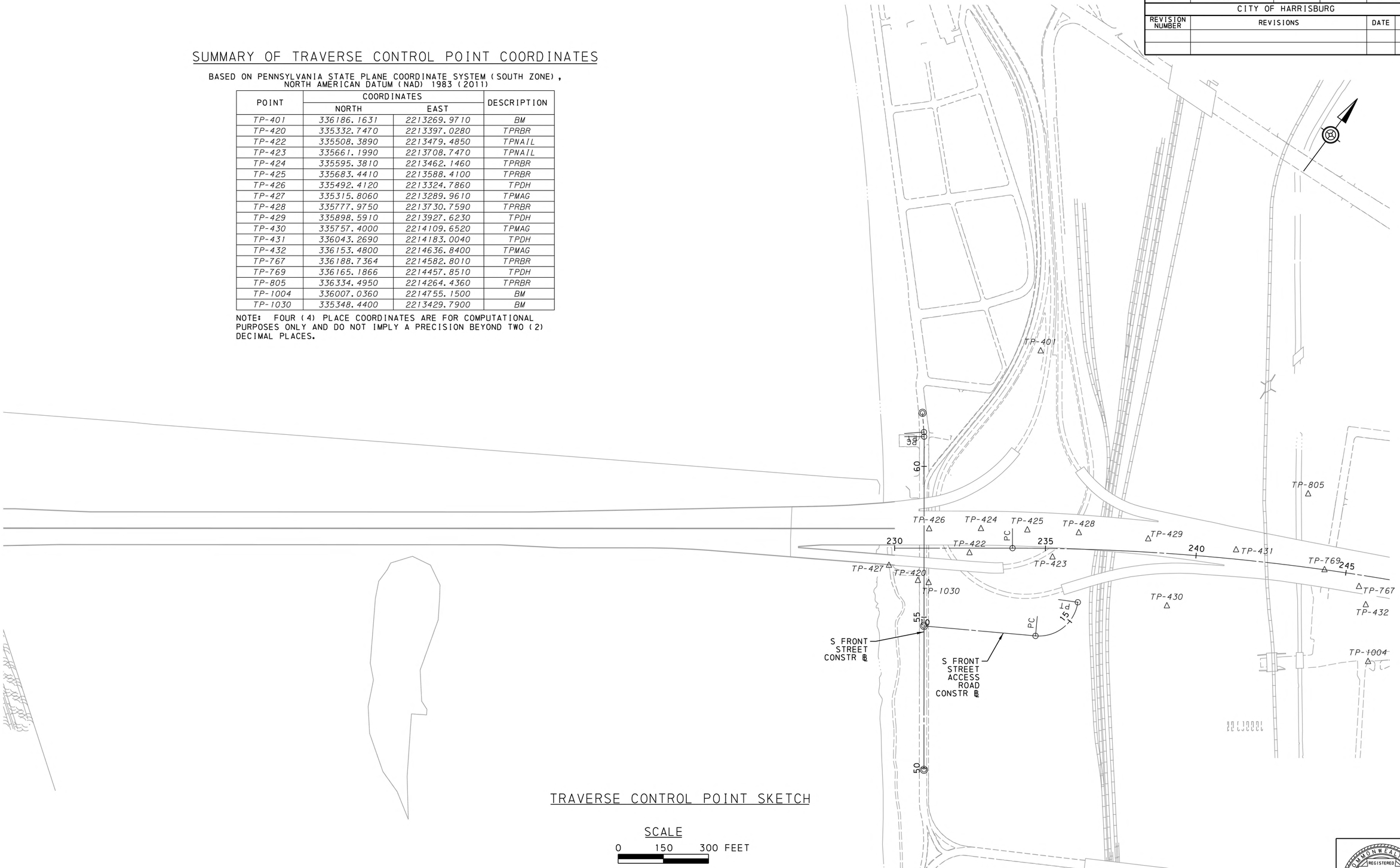

TRAVERSE CONTROL POINT SKETCH

SCALE

0 150 300 FEET

COMMONWEALTH OF PENNSYLVANIA
REGISTERED PROFESSIONAL
JOACHIM J. ALFIERI
ENGINEER
039743-E

7/2/2025
FILENAME: 43377-OCS-s-cv-gn104.dgn

DISTRICT	COUNTY	ROUTE	SECTION	SHEET
8-0	DAUPHIN	0083	OCS	7 OF 29
CITY OF HARRISBURG				

REVISION NUMBER	REVISIONS	DATE	BY

SUMMARY OF PROJECT COORDINATES

BASED ON PENNSYLVANIA STATE PLANE COORDINATE SYSTEM
NORTH AMERICAN DATUM 1983 (NAD 83)(SOUTH ZONE)

ROUTE	POINT	STATION	COORDINATES		BEARING
			NORTH	EAST	
SR 0083 NB CONSTR ℄	POB	230+00.00	335372.7702	2213271.0839	N 53°23′25" E
	PC	233+90.83	335605.8429	2213584.8065	
	PI	241+24.18	336043.1872	2214173.4845	
	POE/PT	248+52.89	336358.2151	2214835.7301	N 64°33′35" E
S FRONT STREET CONSTR ℄	POB	49+94.32	334841.0504	2213787.1648	N 36°34′50" W
	PC	60+98.52	335727.7430	2213129.1156	
	PI	61+06.02	335733.7619	2213124.6488	
	PT	61+13.51	335739.4296	2213119.7439	N 40°52′23" W
	POE/PT	61+77.55	335787.8594	2213077.8326	
S FRONT STREET ACCESS ROAD CONSTR ℄	POB	10+00.00	335223.6873	2213503.1950	N 58°27′07" E
	PC	13+71.08	335417.8390	2213819.4258	
	PI	14+94.57	335482.4541	2213924.6696	
	PT	15+68.61	335590.8727	2213865.5362	N 28°36′32" E

NOTE: FOUR (4) PLACE COORDINATES ARE USED FOR COMPUTATIONAL PURPOSES ONLY AND DO NOT IMPLY A PRECISION BEYOND TWO (2) PLACES.

COMMONWEALTH OF PENNSYLVANIA
REGISTERED PROFESSIONAL
JOACHIM J. ALFIERI
ENGINEER
039743-E

7/2/2025
FILENAME: 43377-OCS-s-cv-gn105.dgn

DISTRICT	COUNTY	ROUTE	SECTION	SHEET
8-0	DAUPHIN	0083	OCS	8 OF 29
CITY OF HARRISBURG				

REVISION NUMBER	REVISIONS	DATE	BY

PA DEPARTMENT OF TRANSPORTATION
KEYSTONE BUILDING
400 NORTH STREET
FIFTH FLOOR
HARRISBURG, PA 17120
PHONE: 717-787-2838

PENNDOT ENGINEERING DISTRICT 8-0
2140 HERR STREET
HARRISBURG, PA 17103
PHONE: 717-787-6653

GENERAL NOTES:

1. ALL EARTH DISTURBANCES, INCLUDING CLEARING AND GRUBBING AS WELL AS CUTS AND FILLS SHALL BE DONE IN ACCORDANCE WITH THE APPROVED E&S PLAN. A COPY OF THE APPROVED DRAWINGS MUST BE AVAILABLE AT THE PROJECT SITE AT ALL TIMES.

2. AT LEAST SEVEN (7) DAYS PRIOR TO STARTING ANY EARTH DISTURBANCE ACTIVITIES, INCLUDING CLEARING AND GRUBBING, THE OWNER AND/OR OPERATOR SHALL INVITE ALL CONTRACTORS, THE LANDOWNER, APPROPRIATE MUNICIPAL OFFICIALS, THE E&S PLAN PREPARER, THE PCSM PLAN PREPARER, THE LICENSED PROFESSIONAL RESPONSIBLE FOR OVERSIGHT OF CRITICAL STAGES OF IMPLEMENTATION OF THE PCSM PLAN (IF APPLICABLE), AND A REPRESENTATIVE FROM THE DAUPHIN COUNTY CONSERVATION DISTRICT TO AN ON-SITE PRECONSTRUCTION MEETING.

3. ALL EARTH DISTURBANCE ACTIVITIES SHALL PROCEED IN ACCORDANCE WITH THE SEQUENCE PROVIDED ON THE PLAN DRAWINGS. DEVIATION FROM THAT SEQUENCE MUST BE APPROVED IN WRITING FROM THE ENGINEER PRIOR TO IMPLEMENTATION.

4. AREAS TO BE FILLED ARE TO BE CLEARED, GRUBBED, AND STRIPPED OF TOPSOIL TO REMOVE TREES, VEGETATION, ROOTS AND OTHER OBJECTIONABLE MATERIAL.

5. CLEARING, GRUBBING, AND TOPSOIL STRIPPING SHALL BE LIMITED TO THOSE AREAS DESCRIBED IN EACH STAGE OF THE CONSTRUCTION SEQUENCE. GENERAL SITE CLEARING, GRUBBING AND TOPSOIL STRIPPING MAY NOT COMMENCE IN ANY STAGE OR PHASE OF THE PROJECT UNTIL THE E&S BMPS SPECIFIED BY THE BMP SEQUENCE FOR THAT STAGE OR PHASE HAVE BEEN INSTALLED AND ARE FUNCTIONING AS DESCRIBED IN THIS E&S PLAN.

6. AT NO TIME SHALL CONSTRUCTION VEHICLES BE ALLOWED TO ENTER AREAS OUTSIDE THE LIMIT OF DISTURBANCE BOUNDARIES SHOWN ON THE PLAN MAPS. THESE AREAS MUST BE CLEARLY MARKED AND FENCED OFF BEFORE CLEARING AND GRUBBING OPERATIONS BEGIN.

7. TOPSOIL REQUIRED FOR THE ESTABLISHMENT OF VEGETATION SHALL BE STOCKPILED AT THE LOCATION(S) SHOWN ON THE PLAN MAPS(S) IN THE AMOUNT NECESSARY TO COMPLETE THE FINISH GRADING OF ALL EXPOSED AREAS THAT ARE TO BE STABILIZED BY VEGETATION. EACH STOCKPILE SHALL BE PROTECTED IN THE MANNER SHOWN ON THE PLAN DRAWINGS. STOCKPILE HEIGHTS SHALL NOT EXCEED 35 FEET. STOCKPILE SLOPES SHALL BE 2H:1V OR FLATTER.

8. IMMEDIATELY UPON DISCOVERING UNFORESEEN CIRCUMSTANCES POSING THE POTENTIAL FOR ACCELERATED EROSION AND/OR SEDIMENT POLLUTION, THE OPERATOR SHALL IMPLEMENT APPROPRIATE BEST MANAGEMENT PRACTICES TO MINIMIZE THE POTENTIAL FOR EROSION AND SEDIMENT POLLUTION AND NOTIFY THE ENGINEER AND/OR THE REGIONAL OFFICE OF THE DEPARTMENT.

9. ALL BUILDING MATERIALS AND WASTES SHALL BE REMOVED FROM THE SITE AND RECYCLED OR DISPOSED OF IN ACCORDANCE WITH THE DEPARTMENT'S SOLID WASTE MANAGEMENT REGULATIONS AT 25 PA. CODE 260.1 ET SEQ., 271.1, AND 287.1 ET. SEQ. NO BUILDING MATERIALS OR WASTES OR UNUSED BUILDING MATERIALS SHALL BE BURNED, BURIED, DUMPED, OR DISCHARGED AT THE SITE.

10. BEFORE INITIATING ANY REVISION TO THE APPROVED E&S PLAN OR REVISIONS TO OTHER PLANS WHICH MAY AFFECT THE EFFECTIVENESS OF THE APPROVED E&S PLAN, THE OPERATOR MUST RECEIVE APPROVAL OF THE REVISIONS FROM THE ENGINEER. THE OPERATOR SHALL ASSURE THAT THE APPROVED E&S PLAN IS PROPERLY AND COMPLETELY IMPLEMENTED.

11. ALL OFF-SITE WASTE AND BORROW AREAS MUST HAVE AN E&S PLAN APPROVED BY THE LOCAL CONSERVATION DISTRICT OR THE DEPARTMENT FULLY IMPLEMENTED PRIOR TO BEING ACTIVATED.

12. THE CONTRACTOR IS RESPONSIBLE FOR ENSURING THAT ANY MATERIAL BROUGHT ON SITE IS CLEAN FILL. FORM FP-001 MUST BE RETAINED BY THE PROPERTY OWNER FOR ANY FILL MATERIAL AFFECTED BY A SPILL OR RELEASE OF A REGULATED SUBSTANCE BUT QUALIFYING AS CLEAN FILL DUE TO ANALYTICAL TESTING.

13. ALL PUMPING OF WATER FROM ANY WORK AREA SHALL BE DONE ACCORDING TO THE PROCEDURE DESCRIBED IN THIS PLAN, OVER UNDISTURBED VEGETATED AREAS.

14. UNTIL THE SITE IS STABILIZED, ALL EROSION AND SEDIMENT BMPS SHALL BE MAINTAINED PROPERLY. MAINTENANCE SHALL INCLUDE INSPECTIONS OF ALL EROSION AND SEDIMENT BMPS AFTER EACH RUNOFF EVENT AND ON A WEEKLY BASIS. ALL PREVENTATIVE AND REMEDIAL MAINTENANCE WORK, INCLUDING CLEAN OUT, REPAIR, REPLACEMENT, RE-GRADING, RESEEDING, RE-MULCHING AND RE-NETTING MUST BE PERFORMED IMMEDIATELY. IF THE E&S BMPS FAIL TO PERFORM AS EXPECTED, REPLACEMENT BMPS, OR MODIFICATIONS OF THOSE INSTALLED WILL BE REQUIRED.

15. A LOG SHOWING DATES THAT E&S BMPS WERE INSPECTED AS WELL AS ANY DEFICIENCIES FOUND AND THE DATE THEY WERE CORRECTED SHALL BE MAINTAINED ON THE SITE AND BE MADE AVAILABLE TO REGULATORY AGENCY OFFICIALS AT THE TIME OF INSPECTION.

16. SEDIMENT TRACKED ONTO ANY PUBLIC ROADWAY OR SIDEWALK SHALL BE RETURNED TO THE CONSTRUCTION SITE BY THE END OF EACH WORK DAY AND DISPOSED IN THE MANNER DESCRIBED IN THIS PLAN. IN NO CASE SHALL THE SEDIMENT BE WASHED, SHOVELED, OR SWEPT INTO ANY ROADSIDE DITCH, STORM SEWER, OR SURFACE WATER.

17. ALL SEDIMENT REMOVED FROM BMPS SHALL BE DISPOSED OF IN THE MANNER DESCRIBED ON THE PLAN DRAWINGS.

18. AREAS WHICH ARE TO BE TOPSOILED SHALL BE SCARIFIED TO A MINIMUM DEPTH OF 3 TO 5 INCHES (6 TO 12 INCHES ON COMPACTED SOILS) PRIOR TO PLACEMENT OF TOPSOIL. AREAS TO BE VEGETATED SHALL HAVE A MINIMUM 4 INCHES OF TOPSOIL IN PLACE PRIOR TO SEEDING AND MULCHING. FILL OUTSLOPES SHALL HAVE A MINIMUM OF 2 INCHES OF TOPSOIL.

19. ALL FILLS SHALL BE COMPACTED AS REQUIRED TO REDUCE EROSION, SLIPPAGE, SETTLEMENT, SUBSIDENCE OR OTHER RELATED PROBLEMS. FILL INTENDED TO SUPPORT BUILDINGS, STRUCTURES AND CONDUITS, ETC. SHALL BE COMPACTED IN ACCORDANCE WITH LOCAL REQUIREMENTS OR CODES.

20. ALL EARTHEN FILLS SHALL BE PLACED IN COMPACTED LAYERS NOT TO EXCEED 9 INCHES IN THICKNESS.

21. FILL MATERIALS SHALL BE FREE OF FROZEN PARTICLES, BRUSH, ROOTS, SOD, OR OTHER FOREIGN OR OBJECTIONABLE MATERIALS THAT WOULD INTERFERE WITH OR PREVENT CONSTRUCTION OF SATISFACTORY FILLS.

22. FROZEN MATERIALS OR SOFT, MUCKY, OR HIGHLY COMPRESSIBLE MATERIALS SHALL NOT BE INCORPORATED INTO FILLS.

23. FILL SHALL NOT BE PLACED ON SATURATED OR FROZEN SURFACES.

24. SEEPS OR SPRINGS ENCOUNTERED DURING CONSTRUCTION SHALL BE HANDLED IN ACCORDANCE WITH THE STANDARD AND SPECIFICATION FOR SUBSURFACE DRAIN OR OTHER APPROVED METHOD.

25. ALL GRADED AREAS SHALL BE PERMANENTLY STABILIZED IMMEDIATELY UPON REACHING FINISHED GRADE. CUT SLOPES IN COMPETENT BEDROCK AND ROCK FILLS NEED NOT BE VEGETATED. SEEDED AREAS WITHIN 50 FEET OF A SURFACE WATER, OR AS OTHERWISE SHOWN ON THE PLAN DRAWINGS, SHALL BE BLANKETED ACCORDING TO THE STANDARDS OF THIS PLAN.

26. IMMEDIATELY AFTER EARTH DISTURBANCE ACTIVITIES CEASE IN ANY AREA OR SUBAREA OF THE PROJECT, THE OPERATOR SHALL STABILIZE ALL DISTURBED AREAS. DURING NON-GERMINATING MONTHS, MULCH OR PROTECTIVE BLANKETING SHALL BE APPLIED AS DESCRIBED IN THE PLAN. AREAS NOT AT FINISHED GRADE, WHICH WILL BE REACTIVATED WITHIN 1 YEAR, MAY BE STABILIZED IN ACCORDANCE WITH THE TEMPORARY STABILIZATION SPECIFICATIONS. THOSE AREAS WHICH WILL NOT BE REACTIVATED WITHIN 1 YEAR SHALL BE STABILIZED IN ACCORDANCE WITH THE PERMANENT STABILIZATION SPECIFICATIONS.

27. PERMANENT STABILIZATION IS DEFINED AS A MINIMUM UNIFORM, PERENNIAL 70% VEGETATIVE COVER OR OTHER PERMANENT NON-VEGETATIVE COVER WITH A DENSITY SUFFICIENT TO RESIST ACCELERATED EROSION. CUT AND FILL SLOPES SHALL BE CAPABLE OF RESISTING FAILURE DUE TO SLUMPING, SLIDING, OR OTHER MOVEMENTS.

28. E&S BMPS SHALL REMAIN FUNCTIONAL AS SUCH UNTIL ALL AREAS TRIBUTARY TO THEM ARE PERMANENTLY STABILIZED OR UNTIL THEY ARE REPLACED BY ANOTHER BMP APPROVED BY ENGINEER.

29. UPON COMPLETION OF ALL EARTH DISTURBANCE ACTIVITIES AND PERMANENT STABILIZATION OF ALL DISTURBED AREAS, THE OWNER AND/OR OPERATOR SHALL CONTACT THE DAUPHIN COUNTY CONSERVATION DISTRICT TO SCHEDULE A FINAL INSPECTION.

30. AFTER FINAL SITE STABILIZATION HAS BEEN ACHIEVED, TEMPORARY EROSION AND SEDIMENT BMPS MUST BE REMOVED OR CONVERTED TO PERMANENT POST CONSTRUCTION STORMWATER MANAGEMENT BMPS. AREAS DISTURBED DURING REMOVAL OR CONVERSION OF THE BMPS SHALL BE STABILIZED IMMEDIATELY. IN ORDER TO ENSURE RAPID RE-VEGETATION OF DISTURBED AREAS, SUCH REMOVAL/CONVERSIONS ARE TO BE DONE ONLY DURING THE GERMINATING SEASON.

31. FAILURE TO CORRECTLY INSTALL E&S BMPS, FAILURE TO PREVENT SEDIMENT-LADEN RUNOFF FROM LEAVING THE CONSTRUCTION SITE, OR FAILURE TO TAKE IMMEDIATE CORRECTIVE ACTION TO RESOLVE FAILURE OF E&S BMPS MAY RESULT IN ADMINISTRATIVE, CIVIL, AND/OR CRIMINAL PENALTIES BEING INSTITUTED BY THE DEPARTMENT AS DEFINED IN SECTION 602 OF THE PENNSYLVANIA CLEAN STREAMS LAW. THE CLEAN STREAMS LAW PROVIDES FOR UP TO $10,000 PER DAY IN CIVIL PENALTIES, UP TO $10,000 IN SUMMARY CRIMINAL PENALTIES, AND UP TO $25,000 IN MISDEMEANOR CRIMINAL PENALTIES FOR EACH VIOLATION.

32. CONCRETE WASH WATER SHALL BE HANDLED IN THE MANNER DESCRIBED ON THE PLAN DRAWINGS. IN NO CASE SHALL IT BE ALLOWED TO ENTER ANY SURFACE WATERS OR GROUNDWATER SYSTEMS.

33. ALL CHANNELS SHALL BE KEPT FREE OF OBSTRUCTIONS INCLUDING BUT NOT LIMITED TO FILL, ROCKS, LEAVES, WOODY DEBRIS, ACCUMULATED SEDIMENT, EXCESS VEGETATION, AND CONSTRUCTION MATERIAL/WASTES.

34. UNDERGROUND UTILITIES CUTTING THROUGH ANY ACTIVE CHANNEL SHALL BE IMMEDIATELY BACKFILLED AND THE CHANNEL RESTORED TO ITS ORIGINAL CROSS-SECTION AND PROTECTIVE LINING. ANY BASE FLOW WITHIN THE CHANNEL SHALL BE CONVEYED PAST THE WORK AREA IN THE MANNER DESCRIBED IN THIS PLAN UNTIL SUCH RESTORATION IS COMPLETE.

35. CHANNELS HAVING RIPRAP, RENO MATTRESS, OR GABION LININGS MUST BE SUFFICIENTLY OVER-EXCAVATED SO THAT THE DESIGN DIMENSIONS WILL BE PROVIDED AFTER PLACEMENT OF THE PROTECTIVE LINING.

36. EROSION CONTROL BLANKETING SHALL BE INSTALLED ON ALL SLOPES 3H:1V OR STEEPER WITHIN 50 FEET OF A SURFACE WATER AND ON ALL OTHER DISTURBED AREAS SPECIFIED ON THE PLAN MAPS AND/OR DETAIL SHEETS.

37. ALL PUMPING OF SEDIMENT LADEN WATER OR POTENTIALLY SEDIMENT LADEN WATER SHALL BE THROUGH A SEDIMENT CONTROL BMP, SUCH AS A PUMPED WATER FILTER BAG DISCHARGING OVER NON-DISTURBED AREAS.

38. THE CONTRACTOR IS ADVISED TO BECOME THOROUGHLY FAMILIAR WITH THE PROVISIONS OF THE APPENDIX 64, EROSION CONTROL RULES AND REGULATIONS, TITLE 25, PART 1, DEPARTMENT OF ENVIRONMENTAL PROTECTION, SUBPART C, PROTECTION OF NATURAL RESOURCES, ARTICLE III, WATER RESOURCES, CHAPTER 102, EROSION CONTROL.

39. CONTRACTOR TO MINIMIZE SOIL COMPACTION IN DISTURBED AREAS BY UTILIZING LOW-LOAD BEARING, RUBBER TRACKED EQUIPMENT WHEREVER POSSIBLE. CONTRACTOR TO REMAIN WITHIN LIMIT OF DISTURBANCE AT ALL TIMES.

40. THE CONTRACTOR MUST MINIMIZE THE EXTENT AND DURATION OF EARTH DISTURBANCE ACTIVITIES AND WILL IMPLEMENT DAILY STABILIZATION ACTIVITIES TO MINIMIZE THE AMOUNTS OF SEDIMENT WHICH REACH E&S CONTROLS.

41. EXISTING DRAINAGE FEATURES MUST BE PROTECTED TO THE GREATEST EXTENT PRACTICABLE. MAINTAIN EXISTING DRAINAGE PATTERNS DURING CONSTRUCTION.

42. FILL MATERIAL FOR EMBANKMENTS SHALL BE FREE OF ROOTS, OR OTHER WOODY VEGETATION, ORGANIC MATERIAL, LARGE STONES, AND OTHER OBJECTIONABLE MATERIALS.

43. CLEAN FILL IS DEFINED AS: UNCONTAMINATED, NON-WATER SOLUBLE, NON-DECOMPOSABLE, INERT, SOLID DREDGED MATERIAL, USED ASPHALT, BRICK, BLOCK OR CONCRETE FROM CONSTRUCTION AND DEMOLITION ACTIVITIES THAT IS SEPARATE FROM OTHER WASTE AND IS RECOGNIZABLE AS SUCH. THE TERM DOES NOT INCLUDE MATERIALS PLACED IN OR ON THE WATERS OF THE COMMONWEALTH UNLESS OTHERWISE AUTHORIZED. (THE TERM USED ASPHALT DOES NOT INCLUDE MILLED ASPHALT OR ASPHALT THAT HAS BEEN PROCESSED FOR RE-USE). 102.4.(B)(5)(XI)

A. CLEAN FILL AFFECTED BY A SPILL OR RELEASE OF A REGULATED SUBSTANCE: FILL MATERIALS AFFECTED BY A SPILL OR RELEASE OF A REGULATED SUBSTANCE STILL QUALIFIES AS CLEAN FILL PROVIDED THE TESTING REVEALS THAT THE FILL MATERIAL CONTAINS CONCENTRATIONS OF REGULATED SUBSTANCES THAT ARE BELOW THE RESIDENTIAL LIMITS IN TABLES FP-1A AND FP-1B FOUND IN THE DEPARTMENT'S POLICY MANAGEMENT OF FILL. 102.4(B)(5)(XI)

B. ANY PERSON PLACING CLEAN FILL THAT HAS BEEN AFFECTED BY A SPILL OR RELEASE OF A REGULATED SUBSTANCE MUST PRODUCE DOCUMENTATION TO CERTIFY THE ORIGIN OF THE FILL MATERIAL AND THE RESULTS OF THE ANALYTICAL TESTING TO QUALIFY THE MATERIAL AS CLEAN FILL. 102.4(B)(5)(XI)

C. ENVIRONMENTAL DUE DILIGENCE: THE APPLICANT MUST PERFORM ENVIRONMENTAL DUE DILIGENCE TO DETERMINE IF THE FILL MATERIALS ASSOCIATED WITH THE PROJECT QUALIFY AS CLEAN FILL. ENVIRONMENTAL DUE DILIGENCE IS DEFINED AS: INVESTIGATIVE TECHNIQUES, INCLUDING, BUT NOT LIMITED TO, VISUAL PROPERTY INSPECTIONS, ELECTRONIC DATABASE SEARCHES, REVIEW OF PROPERTY OWNERSHIP, REVIEW OF PROPERTY USE HISTORY, SANBORN MAPS, ENVIRONMENTAL QUESTIONNAIRES, TRANSACTION SCREENS, ANALYTICAL TESTING, ENVIRONMENTAL ASSESSMENTS OR AUDITS. ANALYTICAL TESTING IS NOT A REQUIRED PART OF DUE DILIGENCE UNLESS VISUAL INSPECTION AND/OR REVIEW OF THE PAST LAND USE OF THE PROPERTY INDICATES THAT THE FILL MAY HAVE BEEN SUBJECTED TO A SPILL OR RELEASE OF REGULATED SUBSTANCE. IF THE FILL MAY HAVE BEEN AFFECTED BY A SPILL OR RELEASE OF A REGULATED SUBSTANCE, IT MUST BE TESTED TO DETERMINE IF IT QUALIFIES AS CLEAN FILL. TESTING WILL BE PERFORMED IN ACCORDANCE WITH DEP POLICY. 102.4(B)(5)(XI)

D. FILL MATERIAL THAT DOES NOT QUALIFY AS CLEAN FILL IS REGULATED FILL. REGULATED FILL IS WASTE AND MUST BE MANAGED IN ACCORDANCE WITH THE DEPARTMENT'S MUNICIPAL OR RESIDUAL WASTE REGULATIONS BASED ON 25 PA. CODE CHAPTERS 287 RESIDUAL WASTE MANAGEMENT OR 271 MUNICIPAL WASTE MANAGEMENT, WHICHEVER IS APPLICABLE. THESE REGULATIONS ARE AVAILABLE ON-LINE AT WWW.PACODE.COM 102.4(B)(5)(XI)

RECYCLING AND DISPOSAL METHODS:

1. IT IS THE CONTRACTOR'S RESPONSIBILITY TO OBTAIN APPROVALS FROM THE LOCAL CONSERVATION DISTRICT FOR THE RECYCLING AND DISPOSAL OF ALL WASTE MATERIALS. THE CONTRACTOR MUST CONTACT THE CONSERVATION DISTRICT A MINIMUM OF SEVEN (7) DAYS PRIOR TO REMOVAL OF WASTE MATERIALS. EXPECTED CONSTRUCTION WASTES ARE EARTH EXCAVATIONS AND BUILDING DEMOLITION.

2. CONSTRUCTION WASTES INCLUDE BUT ARE NOT LIMITED TO CONCRETE WASH, MILLED/EXCAVATED ASPHALT, AND FILL MATERIAL.

PERMIT INFORMATION FOR CONTRACTOR

1. LIMIT OF DISTURBANCE (LOD) AND NPDES BOUNDARY DISPLAYED ON THESE PLANS IS FILED UNDER PERMIT NO. PAD220010 A4 AND COVERS WORK BEYOND THE SCOPE OF THESE CONTRACT DOCUMENTS. CONTRACTOR IS TO NOT ONLY BE CONFINED TO DISPLAYED LOD FOR APPLICABLE ACTIVITIES BUT MUST ABIDE BY THE RESTRICTIONS CONTAINED WITHIN THESE CONTRACT DOCUMENTS TO AVOID UNINTENDED AND UNNECESSARY DISTURBANCE TO AREAS THAT LACK EROSION AND SEDIMENTATION POLLUTION CONTROLS.

COMMONWEALTH OF PENNSYLVANIA
REGISTERED PROFESSIONAL
JOACHIM J. ALFIERI
ENGINEER
039743-E

DISTRICT	COUNTY	ROUTE	SECTION	SHEET
8-0	DAUPHIN	0083	OCS	9 OF 29
CITY OF HARRISBURG				

REVISION NUMBER	REVISIONS	DATE	BY

SEQUENCE OF CONSTRUCTION

1. INSTALL EROSION AND SEDIMENT POLLUTION CONTROL MEASURES REQUIRED FOR FENCING AND GATE WORK, INCLUDING INLET FILTER BAGS AND COMPOST FILTER SOCK.
2. REMOVE PERIMETER SECURITY FENCING AS NOTED ON THE PLAN AND CONSTRUCT NEW FENCING PER RC-60M. CONSTRUCT GATES PER SPECIAL PROVISIONS.
3. IMPLEMENT PATA 203 ON S FRONT STREET (MODIFIED FOR UNIDIRECTIONAL ROADWAY). MAINTAIN A MINIMUM 12' WIDE CARTWAY FOR PASSING VEHICLES.
4. REMOVE EXISTING CONCRETE CURBING AND SIDEWALK ALONG S FRONT STREET. INSTALL DEPRESSED CURB FOR DRIVEWAYS AND ADJACENT ASPHALT PAVEMENT. ASPHALT PATH IS TO REMAIN OPEN TO THE PUBLIC AT ALL TIMES.
5. INSTALL ROCK CONSTRUCTION ENTRANCE.
6. REMOVE PATA 203 AND INSTALL CONSTRUCTION ENTRANCE SIGN AND CHANNELIZING DEVICES ALONG THE FRONT OF THE ROCK CONSTRUCTION ENTRANCE WHEN NOT IN USE, DO NOT BLOCK ASPHALT PATH.
7. IMPLEMENT PATA 102/103 AS NEEDED, CONSTRUCT S FRONT STREET ACCESS ROAD AND SUBSEQUENT E&S MEASURES FOR USE DURING CONSTRUCTION.
8. CONSTRUCT DOWNGUY AND COLUMN DRILLED CAISSON FOUNDATIONS AS SHOWN ON OCS PLANS.
9. CONTRACTOR TO PROPERLY DISPOSE OF SPOILS FROM FOUNDATION EXCAVATION. SEE SPECIAL PROVISIONS.
10. COMPLETE FIELD SURVEY BOLT-TO-BOLT FOR EACH OCS POLE FOUNDATION AND EACH ANCHOR HOLE LOCATION FOR THE DOWNGUY FOUNDATIONS.
11. CONTRACTOR TO REMOVE TIMBER MATS AND SUBBASE AND STORE ONSITE.
12. SUBMIT SHOP DRAWINGS FOR OCS POLE FABRICATION.
13. CONTRACTOR TO COORDINATE STEEL DELIVERIES WITH AMTRAK. CONTRACTOR TO DELIVER STRUCTURAL STEEL ON TRAILERS WHEN AMTRAK WORK CREWS ARE PRESENT TO OCS POLE ERECTION. CONTRACTOR TO POSITION TRAILERS NEXT TO EACH CORRESPONDING DOWNGUY AND COLUMN DRILLED CAISSON FOUNDATION PER AMTRAK DIRECTION.
14. CONTRACTOR TO STAGE STEEL MEMBER ON TRAILERS TO ALLOW AMTRAK TO LIFT AND ERECT DIRECTLY FROM TRAILERS. CONTRACTOR IS ONLY RESPONSIBLE FOR FURNISHMENT AND DELIVERY OF STRUCTURAL STEEL.
15. UPON COMPLETION OF THE LAST STEEL DELIVERY, CONTRACTOR TO REMOVE S FRONT STREET TEMPORARY ACCESS ROAD.
16. CONDUCT FINAL GRADING AND STABILIZE ALL REMAINING DISTURBED AREAS. UPON PERMANENT STABILIZATION CONTACT THE ENGINEER FOR INSPECTION OF THE SITE BEFORE REMOVING E&S CONTROLS. UPON SUBSEQUENT APPROVAL REMOVE ALL TEMPORARY E&S CONTROLS. REMOVE PATAs AND PLAN MPT.

STABILIZATION NOTES:

1. PLACE ALL SEEDING, SOIL SUPPLEMENTS AND MULCHING ITEMS IN ACCORDANCE WITH THE REQUIREMENTS OF THE MOST RECENT VERSION OF PENNDOT PUBLICATION 408, SECTIONS 804 AND 805 OR OTHER APPROVED SPECIAL PROVISIONS.
2. SPREAD SEED AT THE RATES SPECIFIED WITHIN THE FOLLOWING DATES:

   FORMULA L - MARCH 15 TO JUNE 1 AND AUGUST 1 TO OCTOBER 15

   SEED AND MULCH STOCKPILES IMMEDIATELY.
3. AS SOON AS SLOPES, CHANNELS, DITCHES, AND OTHER DISTURBED AREAS REACH FINAL GRADE THEY MUST BE STABILIZED. UPON COMPLETION OR TEMPORARY CESSATION OF THE EARTH DISTURBANCE ACTIVITY IN A SPECIAL PROTECTION WATERSHED, THAT PORTION OF THE PROJECT SITE TRIBUTARY TO THE SPECIAL PROTECTION WATERS MUST BE IMMEDIATELY STABILIZED. IN ALL OTHER WATERSHEDS, CESSATION OF ACTIVITY FOR AT LEAST 4 DAYS REQUIRES TEMPORARY STABILIZATION.
4. TEMPORARY STABILIZATION METHODS ARE ONLY ACCEPTABLE FOR ONE YEAR. AREAS WHICH WILL NOT BE RE-DISTURBED WITHIN ONE YEAR FROM CESSATION OF WORK MUST BE PERMANENTLY STABILIZED.
5. AN AREA SHALL BE CONSIDERED TO HAVE ACHIEVED FINAL STABILIZATION WHEN IT HAS A MINIMUM UNIFORM 70% PERENNIAL VEGETATIVE COVER OR OTHER PERMANENT NON-VEGETATIVE COVER WITH A DENSITY SUFFICIENT TO RESIST ACCELERATED SURFACE EROSION AND SUBSURFACE CHARACTERISTICS SUFFICIENT TO RESIST SLIDING AND OTHER MOVEMENTS.

SOIL CONSTRUCTION RESOLUTIONS:

STONINESS/ SHALLOW BEDROCK:
1. WHEN THE PERIMETER CONTROLS CANNOT BE PROPERLY ANCHORED IN STONY SOILS, ALTERNATE SEDIMENT BARRIERS INCLUDING STRAW BALES OR ROCK BERMS WILL BE UTILIZED. ALTERNATE CONTROLS WILL BE INSTALLED IN ACCORDANCE WITH THE PADEP EROSION AND SEDIMENT POLLUTION PROGRAM MANUAL.

2. WHEN VERY STONY SOILS ARE ENCOUNTERED IN THE CONSTRUCTION OF GRASSED CONVEYANCE FACILITIES, SEDIMENT REMOVAL FACILITIES, OR LAWN AREAS, THE LARGE STONES WILL BE REMOVED AND REPLACED WITH TOPSOIL CAPABLE OF SUSTAINING EROSION RESISTANT VEGETATION AS SPECIFIED.

ACIDIC SOILS:
1. IF DETERMINED THAT VEGETATION CANNOT GROW DUE TO ACIDIC SOILS, A SOIL TEST WILL BE PERFORMED TO DETERMINE A NEW SEED MIX FOR THE GIVEN CONDITION AND PROPOSED USE. SOIL AMENDMENT WITH LIME WILL BE PERFORMED AND THE LIME RATE WILL BE SPECIFIED BASED ON THE SOIL TEST.

LOW MOISTURE HOLDING CAPACITY:
1. AN APPROPRIATE SEED MIX, TOLERANT TO DRY CONDITIONS WILL BE SPECIFIED FOR THESE SOILS. SOILS WILL BE IRRIGATED AS REQUIRED TO ACHIEVE INITIAL VEGETATIVE COVER.

SHALLOW RESTRICTIVE FEATURE:
1. WHERE NECESSARY IN SOILS WITH A SHALLOW DEPTH TO A RESTRICTIVE FEATURE, ALTERNATE EXCAVATION TECHNIQUES MAY BE REQUIRED SUCH AS, BUT NOT LIMITED TO, DRILLING, OR HAMMERING OF THE EXISTING SOIL TO GET THE REQUIRED EXCAVATION DEPTH. NOTIFY PROJECT ENGINEER IF ALTERNATIVE METHODS ARE REQUIRED FOR EXCAVATION.

EROSION HAZARD:
1. WHERE NECESSARY IN SOILS WITH HIGH EROSION HAZARD RATINGS, TEMPORARY STABILIZATION METHODS WILL BE IMPLEMENTED, INCLUDING BUT NOT LIMITED TO ROCK, SLOPE REINFORCEMENTS, MULCH BLANKETS, STRAW BALES, OR ROCK BERMS. ALL SEDIMENT MUST REMAIN WITHIN THE PROJECT AREA AND ALTERNATE CONTROLS WILL BE INSTALLED IN ACCORDANCE WITH THE PADEP EROSION AND SEDIMENT POLLUTION CONTROL PROGRAM MANUAL.

STEEP SLOPES:
1. CONTRACTOR TO TRACK SLOPE PERPENDICULAR TO FLOW DIRECTION TO BREAK UP CONCENTRATED FLOW PRIOR TO THE STABILIZATION OF STEEP SLOPES. ROCK, TURF REINFORCEMENT MATTING OR OTHER FORMS OF SLOPE REINFORCEMENT MAY BE REQUIRED FOR SLOPE STABILIZATION.

PONDING:
1. PONDED AREAS WHICH WILL REQUIRE PUMPING/ DEWATERING MUST BE PUMPED THROUGH A PUMPED WATER FILTER OR OTHER APPROVED FILTRATION DEVICE. PUMPED WATER FILTER BAGS TO BE INSTALLED PER E&S PLAN DETAILS AND DISCHARGE TO AN APPROVED LOCATION.

SOIL COMPACTION:
1. CONTRACTOR TO MINIMIZE SOIL COMPACTION IN DISTURBED AREAS BY UTILIZING LOW-LOAD BEARING, RUBBER TRACKED EQUIPMENT WHEREVER POSSIBLE. CONTRACTOR TO REMAIN WITHIN PROTECTIVE FENCE LIMITS. LARGE CLEARED AREAS AND STOCKPILING OF TOPSOIL SHOULD BE MINIMIZED.

EXISTING SOILS TABLE

TYPE	NAME AND TEXTURE	HYDRO. GROUP	DEPTH TO WATER TABLE (IN.)	DEPTH TO BEDROCK (IN.)	SLOPE (%)	CONSTRUCTION LIMITATIONS
UrB	URBAN LAND	N/A	N/A	N/A	0 - 8	FROST ACTION

SEEDING TABLE

FORMULA AND SPECIES	MINIMUM %			SEEDING	SOIL SUPPLEMENTS		STRAW OR HAY MULCHING
	PURITY	GERMINATION	PURE LIVE SEED	LBS PER 1000 SQ. YARDS	LIMESTONE LBS PER 1000 SQ. YARDS	10-20-20 FERTILIZER LBS PER 1000 SQ. YARDS	LBS PER 1000 SQ. YARDS
PENNDOT FORMULA L REFER TO PUBLICATION 408.804 FOR FORMULA AND SPECIES	98	85-90	83-88	48	800	140	1200
PENNDOT FORMULA T REFER TO PUBLICATION 408.804 FOR FORMULA AND SPECIES	97	85	83	9	N/A	140	1200

EROSION AND SEDIMENT CONTROL MAINTENANCE PROGRAM

E&S BMP	ISSUE TO LOOK FOR	CORRECTIVE MEASURE
ROCK CONSTRUCTION ENTRANCE	DISLODGED STONES	REPLACE AND LEVEL STONE
	DAMAGED WASH RACK	REPAIR OR REPLACE WASH RACK
	CRUSHED CULVERT PIPE	REPLACE CULVERT PIPE
	EXPOSED FABRIC	REPLACE AND LEVEL STONE
COMPOST FILTER SOCK	UNDER-CUTTING OF SOCK	INSTALL SILT FENCE OR STRAW BALE
	TORN SOCK FABRIC	REPLACE FABRIC OR INSTALL NEW SOCK
	FLATTENING	INSTALL A SECOND SOCK ON TOP
	FREQUENT SEDIMENT OVERTOPPING	INSTALL 3 SOCKS IN PYRAMID CONFIGURATION OR IMPLEMENT DIVERSIONS IN UPSTREAM DRAINAGE AREA
PUMPED WATER FILTER BAG	CLOGGED BAG	INSTALL REPLACEMENT BAG
	DISCONNECTED HOSE	CHECK AND REPLACE HOSE CLAMPS
	LEAKING HOSE	REPLACE HOSE SECTIONS AND COUPLINGS AS REQUIRED
	NON -UNIFORM DISCHARGE	MAINTAIN A LEVEL SURFACE FOR BAG WITH STONE. REPLACE BAG IF CLOGGED.
EROSION CONTROL BLANKET	FAILURE TO ANCHOR	PREPARE SLOPE FOR LEVEL CONTACT AND RE-ANCHOR.
	TORN BLANKET	REPLACE SECTIONS OF BLANKET.
	BLANKET UNDERMINED	CHECK AND REPAIR ALL BLANKET SEAMS. RE-KEY BLANKET AS NEEDED.
INLET PROTECTION	CLOGGED, RIPPED, OR DAMAGED BAG OR LIFTING STRAPS	CLEAN AND OR REPLACE BAG AS NEEDED.
COMPOST SOCK CONCRETE WASHOUT	CONCRETE MORE THAN 1/2 THE HEIGHT OF SOCKS	REMOVE CONCRETE AND DISPOSE OF IN A PROPER MANOR.
	RIPPED OR DAMAGED FILTER SOCK OR IMPERVIOUS MEMBRANE	REPAIR OR REPLACE SOCK AND OR MEMBRANE AS NEEDED.
WASH RACK	WASH RACK DRAINS AND ORIFICES CLOGGED WITH SEDIMENT	BLAST SEDIMENT WITH WATER TO CLEAR ORIFICES, ENSURE DISCHARGED WATER IS EITHER COLLECTED INTO A PWFB OR IS DIRECTED TO A FILTER SOCK TRAP
PORTABLE CONCRETE WASHOUT	CONCRETE MORE THAN 1/2 THE HEIGHT OF THE CONTAINER	REMOVE CONCRETE AND DISPOSE OF IN A PROPER MANOR.

NOTES:

1. REFER TO THE NOTES CONTAINED WITHIN EACH E&S DETAIL FOR ADDITIONAL INSPECTION AND MAINTENANCE PROCEDURES.
2. VISUAL E&S INSPECTION IS REQUIRED ON A WEEKLY BASIS AND AFTER EACH RUNOFF EVENT WHILE E&S CONTROLS ARE IN PLACE.
3. THE PROJECT OWNER MUST RETAIN A WRITTEN LOG OF E&S INSPECTION FORMS ON SITE. INSPECTION REPORTS MUST BE PROVIDED TO THE DEP OR COUNTY CONSERVATION DISTRICT IF REQUESTED.

COMMONWEALTH OF PENNSYLVANIA
REGISTERED PROFESSIONAL
JOACHIM J. ALFIERI
ENGINEER
039743-E

7/2/2025
FILENAME: 43377-OCS-s-cv-de102.dgn

DISTRICT	COUNTY	ROUTE	SECTION	SHEET
8-0	DAUPHIN	0083	OCS	10 OF 29
CITY OF HARRISBURG				

REVISION NUMBER	REVISIONS	DATE	BY

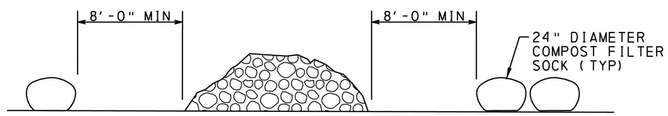

SECTION B-B

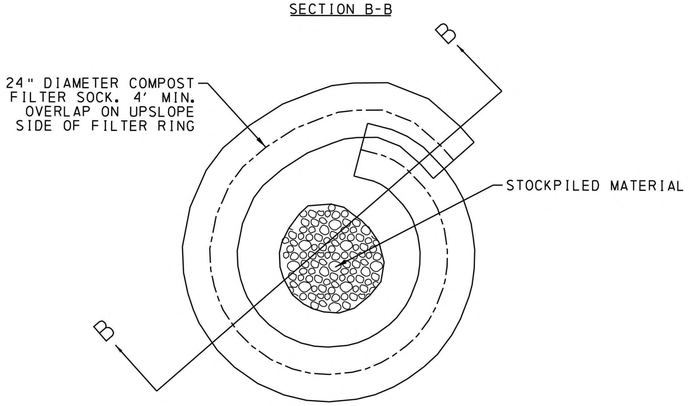

TYPICAL STOCKPILE LOCATION DETAIL

NOT TO SCALE

NOTES FOR STOCKPILE:

1. INSTALL ON FLAT GRADE FOR OPTIMUM PERFORMANCE.
2. 18" DIAMETER FILTER SOCK MAY BE STACKED ONTO DOUBLE 24" DIAMETER SOCKS IN PYRAMIDAL CONFIGURATION FOR ADDED HEIGHT.
3. A SUITABLE IMPERVIOUS GEOMEMBRANE SHALL BE PLACED AT THE LOCATION OF THE STOCKPILE PRIOR TO INSTALLING THE SOCKS.
4. IF ONSITE STOCKPILES ARE REQUIRED, CONTRACTOR MUST PLACE WITHIN THE PROJECT'S LIMIT OF DISTURBANCE.
5. IMMEDIATELY STABILIZE COMPLETED STOCKPILES WITH TEMPORARY SEEDING.

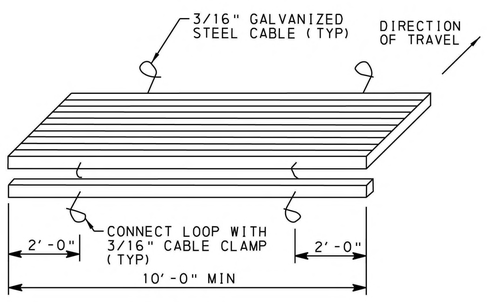

TIMBER MATTING FOR ACCESS ROAD

NOT TO SCALE
(ITEMS 9000-0026)

NOTES:

1. ALL WOOD MEMBERS ARE 4"X4".
2. A GEOTEXTILE UNDERLAYMENT SHALL BE USED UNDER THE WOOD MAT.
3. TIMBER MATTING TO BE ANCHORED AT EACH END OF CABLES.
4. SEE SPECIAL PROVISION FOR ADDITIONAL INFORMATION.

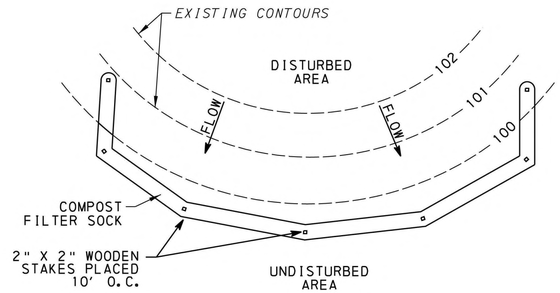

PLAN

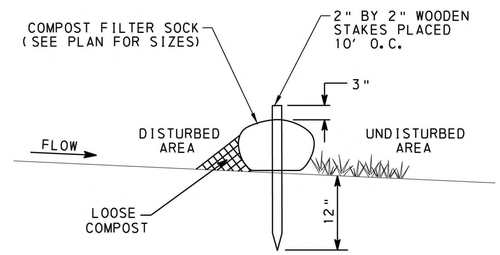

SECTION VIEW

COMPOST STANDARDS	
ORGANIC MATTER CONTENT	25% - 100% (DRY WEIGHT BASIS)
ORGANIC PORTION	FIBROUS AND ELONGATED
PH	5.5-8.5
MOISTURE CONTENT	30% - 60%
PARTICLE SIZE	30%-50% PASS THROUGH 3/8" SIEVE
SOLUBLE SALT CONCENTRATION	5.0 DS/M (MMHOS/CM) MAXIMUM

COMPOST FILTER SOCK

NOT TO SCALE
(ITEMS 0867-0018 AND 0867-0022)

NOTES:

1. SOCK FABRIC MUST MEET THE STANDARDS OF THE LATEST VERSION OF THE PA DEP E&S MANUAL, OR PENNDOT PUBLICATION 408, SECTION 867. COMPOST MUST MEET THE STANDARDS OF THE TABLE SHOWN ON THIS DETAIL, OR PENNDOT PUBLICATION 408, SECTION 867.
2. COMPOST FILTER SOCK MUST BE PLACED AT EXISTING LEVEL GRADE. BOTH ENDS OF THE SOCK MUST BE EXTENDED AT LEAST 8 FEET UP SLOPE AT 45 DEGREES TO THE MAIN SOCK ALIGNMENT.
3. MAXIMUM SLOPE LENGTH ABOVE ANY SOCK MUST NOT EXCEED THAT SHOWN ON E&S MANUAL FIGURE 4.2. STAKES MAY BE INSTALLED IMMEDIATELY DOWNSLOPE OF THE SOCK IF SO SPECIFIED BY THE MANUFACTURER.
4. DO NOT ALLOW TRAFFIC TO CROSS FILTER SOCKS.
5. ACCUMULATED SEDIMENT MUST BE REMOVED WHEN IT REACHES HALF THE ABOVE GROUND HEIGHT OF THE SOCK AND DISPOSED IN THE MANNER DESCRIBED ELSEWHERE IN THE PLAN.
6. SOCKS MUST BE INSPECTED WEEKLY AND AFTER EACH RUNOFF EVENT. DAMAGED SOCKS WILL BE REPAIRED ACCORDING TO MANUFACTURER'S SPECIFICATIONS OR REPLACED WITHIN 24 HOURS OF INSPECTION.
7. BIODEGRADABLE FILTER SOCKS MUST BE REPLACED AFTER 6 MONTHS; PHOTODEGRADABLE SOCKS AFTER 1 YEAR. POLYPROPYLENE SOCKS MUST BE REPLACED ACCORDING TO MANUFACTURER'S RECOMMENDATIONS.
8. UPON STABILIZATION OF THE AREA TRIBUTARY TO THE SOCK, STAKES WILL BE REMOVED. THE SOCK MAY BE LEFT IN PLACE AND VEGETATED OR REMOVED. IN THE LATTER CASE, THE MESH MUST BE CUT OPEN AND THE MULCH SPREAD AS A SOIL SUPPLEMENT. IN BALLASTED AREAS AND WITHIN RAILROAD PROPERTY, FILTER SOCKS CANNOT BE LEFT IN PLACE AND MUST BE REMOVED AND DISPOSED OF PROPERLY.

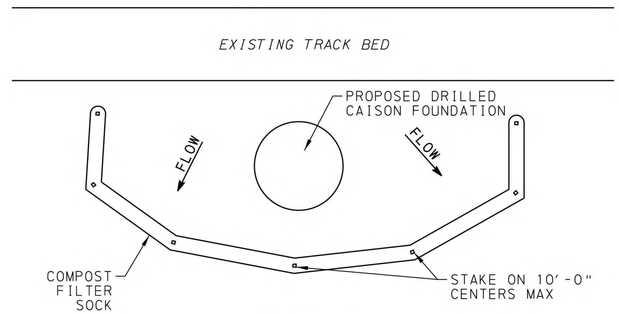

PLAN VIEW

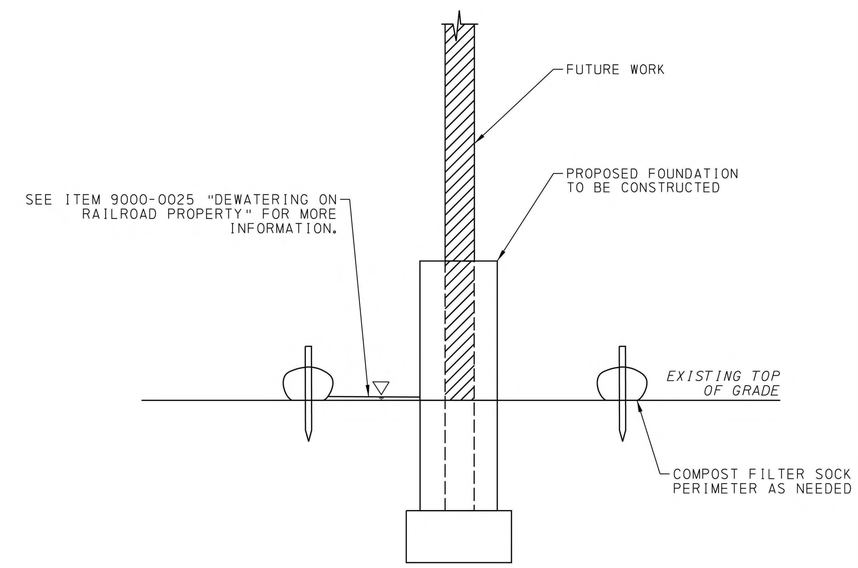

SECTION VIEW

DRILLED CAISON FOUNDATION CONSTRUCTION TYPICAL DETAIL

NOT TO SCALE

SEQUENCE

1. PRIOR TO DISTURBANCE, SET UP EROSION AND SEDIMENT POLLUTION CONTROLS AS INDICATED. IF VEHICULAR ACCESS CONFLICTS WITH E&S MEASURES, MODIFY PLACEMENT ACCORDINGLY.
2. BACKFILL EXCAVATED AREA AND STABILIZE AREA.
3. REMOVE EROSION AND SEDIMENT POLLUTION CONTROLS WHEN AREA HAS REACHED A MINIMUM OF 70% PERMANENTLY STABILIZED COVER. IN AREAS DEVOID OF VEGETATION LIKE RAILROAD PROPERTY, REMOVE E&S CONTROLS ONCE PHYSICAL WORK IS COMPLETE AND NO ADDITIONAL DISTURBANCE IS ANTICIPATED.
4. SEE COMPOST FILTER SOCK NOTES REGARDING DISPOSAL OF FILTER SOCK.

COMMONWEALTH OF PENNSYLVANIA
REGISTERED PROFESSIONAL
JOACHIM J. ALFIERI
ENGINEER
039743-E

7/2/2025
FILENAME: 43377-OCS-s-cv-de103.dgn

DISTRICT	COUNTY	ROUTE	SECTION	SHEET
8-0	DAUPHIN	0083	OCS	11 OF 29
CITY OF HARRISBURG				

REVISION NUMBER	REVISIONS	DATE	BY

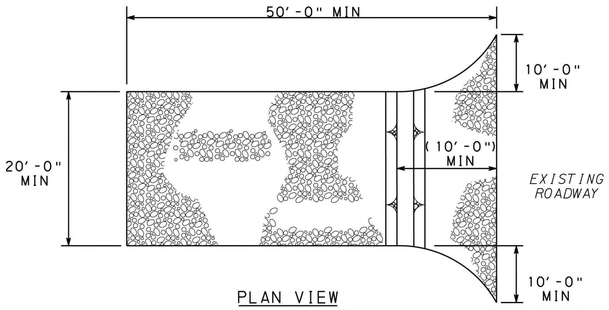

PLAN VIEW

PLAN SYMBOL: RCE

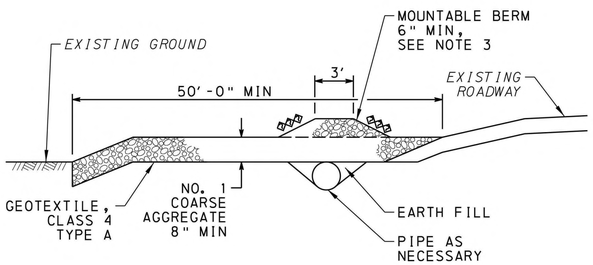

PROFILE VIEW

NOTES:

1. REMOVE TOPSOIL PRIOR TO INSTALLATION OF ROCK CONSTRUCTION ENTRANCE. EXTEND ROCK OVER FULL WIDTH OF ENTRANCE.
2. RUNOFF MUST BE DIVERTED FROM ROADWAY TO A SUITABLE SEDIMENT REMOVAL BMP PRIOR TO ENTERING ROCK CONSTRUCTION ENTRANCE.
3. MOUNTABLE BERM MUST BE INSTALLED WHEREVER OPTIONAL CULVERT PIPE IS USED AND PROPER PIPE COVER AS SPECIFIED BY THE MANUFACTURER IS NOT OTHERWISE PROVIDED. PIPE MUST BE SIZED APPROPRIATELY FOR SIZE OF DITCH CROSSED.
4. ROCK CONSTRUCTION ENTRANCE THICKNESS MUST BE CONSTANTLY MAINTAINED TO THE SPECIFIED DIMENSIONS BY ADDING ROCK. A STOCKPILE MUST BE MAINTAINED ON SITE FOR THIS PURPOSE.
5. ALL SEDIMENT DEPOSITED ON PAVED ROADWAYS MUST BE REMOVED AND RETURNED TO THE CONSTRUCTION SITE IMMEDIATELY. IF EXCESSIVE AMOUNTS OF SEDIMENT ARE BEING DEPOSITED ON ROADWAY, EXTEND LENGTH OF ROCK CONSTRUCTION ENTRANCE BY 50 FOOT INCREMENTS UNTIL CONDITION IS ALLEVIATED OR INSTALL WASH RACK. WASHING THE ROADWAY OR SWEEPING THE DEPOSITS INTO ROADWAY DITCHES, SEWERS, CULVERTS, OR OTHER DRAINAGE COURSES IS NOT ACCEPTABLE.

ROCK CONSTRUCTION ENTRANCE

NOT TO SCALE
(ITEM 0849-0010)

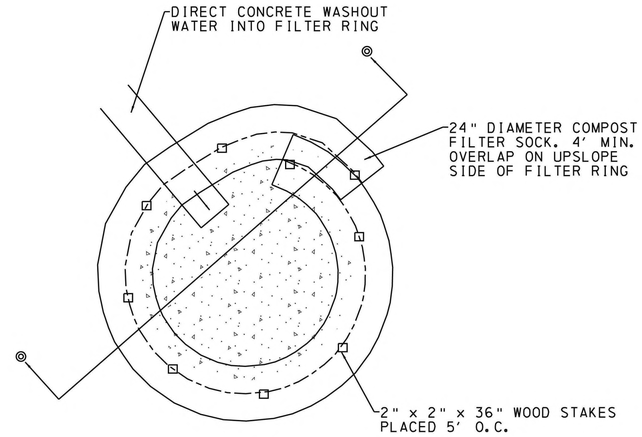

PLAN VIEW

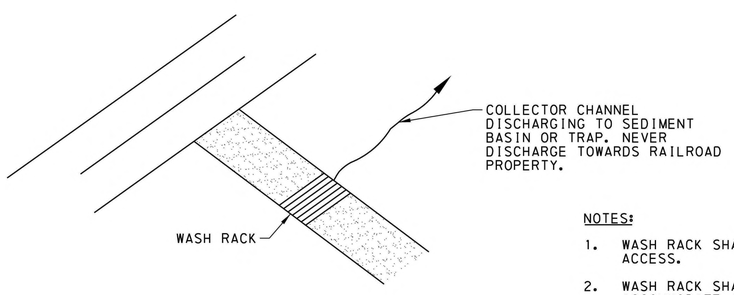

ISOMETRIC VIEW

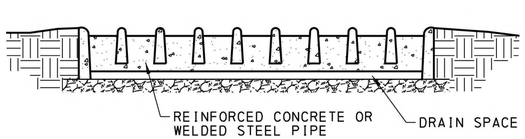

SECTION VIEW

NOTES:

1. WASH RACK SHALL BE 20 FEET (MIN.) WIDE OR TOTAL WIDTH OF ACCESS.
2. WASH RACK SHALL BE DESIGNED AND CONSTRUCTED TO ACCOMMODATE ANTICIPATED CONSTRUCTION VEHICULAR TRAFFIC.
3. A WATER SUPPLY SHALL BE MADE AVAILABLE TO WASH THE WHEELS OF ALL VEHICLES ENTERING OR EXITING THE SITE.
4. MAINTENANCE: DRAIN SPACE UNDER WASH RACK SHALL BE KEPT OPEN AT ALL TIMES. DAMAGE TO THE WASH RACK SHALL BE REPAIRED PRIOR TO FURTHER USE OF THE RACK. ALL SEDIMENT DEPOSITED ON ROADWAYS SHALL BE REMOVED AND RETURNED TO THE CONSTRUCTION SITE IMMEDIATELY. WASHING THE ROADWAY OR SWEEPING THE DEPOSITS INTO ROADWAY DITCHES, SEWERS, CULVERTS, OR OTHER DRAINAGE COURSES IS NOT ACCEPTABLE.
5. FOR INSTALLATIONS ON IMPERVIOUS SURFACES OR AT CONTRACTOR'S DISCRETION, ALTERNATE WASH RACKS MAY BE PROVIDED (PREFABRICATED UNITS ETC.)
6. THE PURPOSE OF THE WASH RACKS IS FOR THE PREVENTION OF BALLAST CONTAMINATION, NOT FOR CHAPTER 102 REQUIREMENTS.

WASH RACK

NOT TO SCALE
(ITEMS 4849-0001)

PLAN SYMBOL: WR

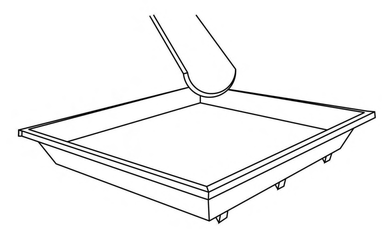

PORTABLE CONCRETE WASHOUT

NOT TO SCALE
(INCIDENTAL TO CONTRACT ITEMS)

NOTES

1. PORTABLE CONCRETE WASHOUT IS REQUIRED FOR INSTALLATION ON IMPERVIOUS SURFACES THAT WOULD PREVENT THE USE OF THE COMPOST FILTER SOCK WASHOUT.
2. PORTABLE CONCRETE WASHOUT MUST BE USED ON RAILROAD PROPERTY TO MINIMIZE THE LIKELIHOOD OF RAILROAD BALLAST CONTAMINATION.
3. PORTABLE CONCRETE WASHOUT TO MAINTAIN WATER-TIGHT CHARACTERISTICS DURING EQUIPMENT RINSING, EVAPORATIVE DRYING OF CONCRETE WASH WATER, AND THE EVENTUAL REMOVAL OF THE WASHOUT.
4. CONTRACTOR TO POSITION PORTABLE CONCRETE WASHOUT AS CLOSE TO THE CONCRETE WORK AS POSSIBLE, IN SUCH A LOCATION TO AVOID INTERFERING WITH RAILROAD OPERATIONS.

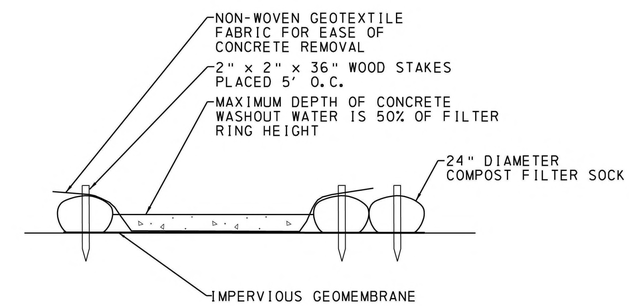

SECTION A-A

COMPOST FILTER SOCK CONCRETE WASHOUT

NOT TO SCALE
(INCIDENTAL TO CONTRACT ITEMS)

NOTES

1. INSTALL ON FLAT GRADE FOR OPTIMUM PERFORMANCE.
2. 18" DIAMETER FILTER SOCK MAY BE STACKED ONTO DOUBLE 24" DIAMETER SOCKS IN PYRAMIDAL CONFIGURATION FOR ADDED HEIGHT.
3. A SUITABLE IMPERVIOUS GEOMEMBRANE MUST BE PLACED AT THE LOCATION OF THE WASHOUT PRIOR TO INSTALLING THE SOCKS.

COMMONWEALTH OF PENNSYLVANIA
REGISTERED PROFESSIONAL
JOACHIM J. ALFIERI
ENGINEER
039743-E

7/2/2025
FILENAME: 43377-OCS-s-cv-de104.dgn

DISTRICT	COUNTY	ROUTE	SECTION	SHEET
8-0	DAUPHIN	0083	OCS	12 OF 29
CITY OF HARRISBURG				

REVISION NUMBER	REVISIONS	DATE	BY

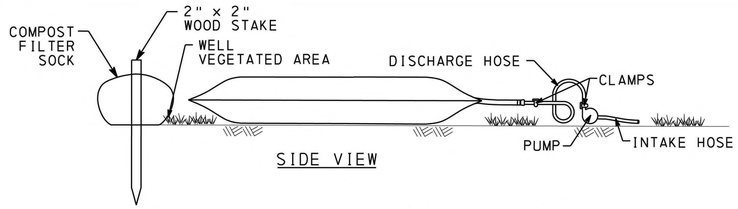

SIDE VIEW

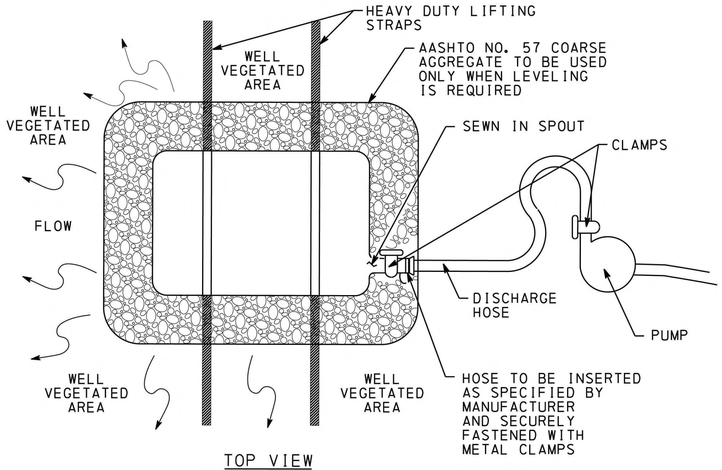

TOP VIEW

PUMPED WATER FILTER BAG

PLAN SYMBOL: PWFB

NOT TO SCALE

(ITEMS 0855-0003 AND 0855-0004)

NOTES:

1. LOW VOLUME FILTER BAGS SHALL BE MADE FROM NON-WOVEN GEOTEXTILE MATERIAL SEWN WITH HIGH STRENGTH, DOUBLE STITCHED "J" TYPE SEAMS. THEY SHALL BE CAPABLE OF TRAPPING PARTICLES LARGER THAN 150 MICRONS. HIGH VOLUME FILTER BAGS SHALL BE MADE FROM WOVEN GEOTEXTILES THAT MEET THE FOLLOWING STANDARDS PROVIDED IN THE TABLE AT THE END OF THE NOTES.

2. A SUITABLE MEANS OF ACCESSING THE BAG WITH MACHINERY REQUIRED FOR DISPOSAL PURPOSES SHALL BE PROVIDED. FILTER BAGS SHALL BE REPLACED WHEN THEY BECOME ½ FULL OF SEDIMENT. SPARE BAGS SHALL BE KEPT AVAILABLE FOR REPLACEMENT OF THOSE THAT HAVE FAILED OR ARE FILLED. BAGS SHALL BE PLACED ON STRAPS TO FACILITATE REMOVAL UNLESS BAGS COME WITH LIFTING STRAPS ALREADY ATTACHED.

3. BAGS SHALL BE LOCATED IN WELL-VEGETATED (GRASSY) AREA, AND DISCHARGE ONTO STABLE, EROSION RESISTANT AREAS. WHERE THIS IS NOT POSSIBLE, A GEOTEXTILE UNDERLAYMENT AND FLOW PATH SHALL BE PROVIDED. BAGS MAY BE PLACED ON FILTER STONE TO INCREASE DISCHARGE CAPACITY. BAGS SHALL NOT BE PLACED ON SLOPES GREATER THAN 5%. CLEAN ROCK OR OTHER NON-ERODIBLE AND NON-POLLUTING MATERIAL MAY BE PLACED UNDER THE BAG TO REDUCE SLOPE STEEPNESS. NEVER DISCHARGE WATER TOWARDS RAILROAD PROPERTY.

4. NO DOWNSLOPE SEDIMENT BARRIER IS REQUIRED FOR MOST INSTALLATIONS. COMPOST BERM OR COMPOST FILTER SOCK SHALL BE INSTALLED BELOW BAGS LOCATED IN HQ OR EV WATERSHEDS, WITHIN 50 FEET OF ANY RECEIVING SURFACE WATER OR WHERE GRASSY AREA IS NOT AVAILABLE.

5. THE PUMP DISCHARGE HOSE SHALL BE INSERTED INTO THE BAGS IN THE MANNER SPECIFIED BY THE MANUFACTURER AND SECURELY CLAMPED. A PIECE OF PVC PIPE IS RECOMMENDED FOR THIS PURPOSE.

6. THE PUMPING RATE SHALL BE NO GREATER THAN 750 GPM OR ½ THE MAXIMUM SPECIFIED BY THE MANUFACTURER, WHICHEVER IS LESS. PUMP INTAKES SHALL BE FLOATING AND SCREENED.

7. FILTER BAGS SHALL BE INSPECTED DAILY. IF ANY PROBLEM IS DETECTED, PUMPING SHALL CEASE IMMEDIATELY AND NOT RESUME UNTIL THE PROBLEM IS CORRECTED.

PUMPED WATER BAG MATERIAL STANDARDS

PROPERTY	TEST METHOD	MINIMUM STANDARD
AVG. WIDE WIDTH STRENGTH	ASTM D-4884	60 LB/IN
GRAB TENSILE	ASTM D-4632	205 LB
PUNCTURE	ASTM D-4833	110 LB
MULLEN BURST	ASTM D-3786	350 PSI
UV RESISTANCE	ASTM D-4355	70%
AOS% RETAINED	ASTM D-4751	80 SIEVE

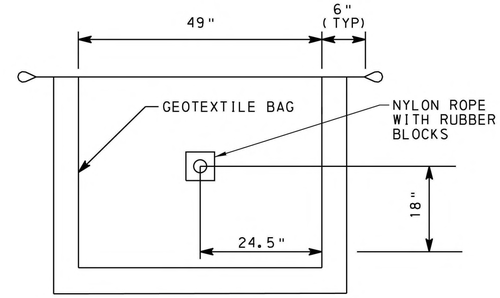

FRONT VIEW

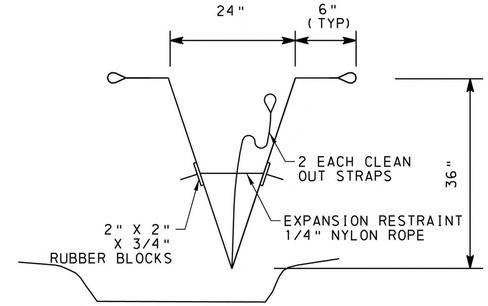

SIDE VIEW

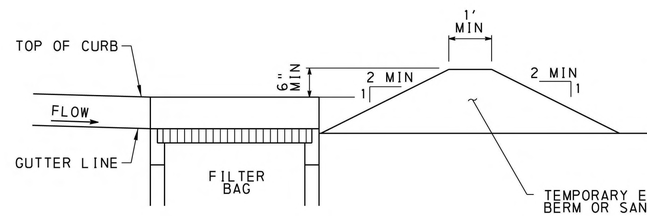

SECTION A-A

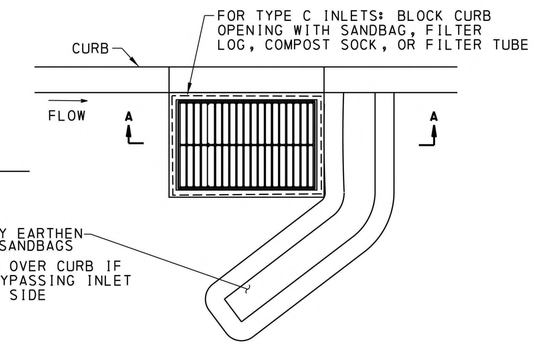

FILTER BAG INLET PROTECTION

NOT TO SCALE

(ITEMS 0860-0000 AND 0860-0002)

NOTES

1. MAXIMUM DRAINAGE AREA = ½ ACRE.

2. INLET PROTECTION SHALL NOT BE REQUIRED FOR INLET TRIBUTARY TO SEDIMENT BASIN OR TRAP. BERMS SHALL BE REQUIRED FOR ALL INSTALLATIONS.

3. ROLLED EARTHERN BERM SHALL BE MAINTAINED UNTIL ROADWAY IS STONED. SIX INCH MINIMUM HEIGHT ASPHALT BERM SHALL BE MAINTAINED UNTIL ROADWAY SURFACE RECEIVES FINAL COAT.

4. AT A MINIMUM, THE FABRIC SHALL HAVE A MINIMUM GRAB TENSILE STRENGTH OF 120 LBS, A MINIMUM BURST STRENGTH OF 200 PSI, AND A MINIMUM TRAPEZOIDAL TEAR STRENGTH OF 50 LBS. FILTER BAGS SHALL BE CAPABLE OF TRAPPING ALL PARTICLES NOT PASSING A NO. 40 SIEVE.

5. INLET FILTER BAGS SHALL BE INSPECTED ON A WEEKLY BASIS AND AFTER EACH RUNOFF EVENT. BAGS SHALL BE EMPTIED AND RINSED OR REPLACED WHEN HALF FULL OF OR WHEN FLOW CAPACITY HAS BEEN REDUCED SO AS TO CAUSE FLOODING OR BYPASSING OF THE INLET. DAMAGED OR CLOGGED BAGS SHALL BE REPLACED. A SUPPLY SHALL BE MAINTAINED ON SITE FOR REPLACEMENT OF BAGS. ALL NEEDED REPAIRS SHALL BE INITIATED IMMEDIATELY AFTER THE INSPECTION. DISPOSE OF ACCUMULATED SEDIMENT AS WELL AS ALL USED BAGS ACCORDING TO THE PLAN NOTES.

6. DO NOT USE ON MAJOR PAVED ROADWAYS WHERE PONDING MAY CAUSE TRAFFIC HAZARDS. INLET PROTECTION LOCATIONS MUST BE EVALUATED BY THE ENGINEER.

PLAN SYMBOL:

IPC TYPE C INLET PROTECTION

IPM TYPE M INLET PROTECTION

COMMONWEALTH OF PENNSYLVANIA
REGISTERED PROFESSIONAL
JOACHIM J. ALFIERI
ENGINEER
039743-E

7/2/2025
FILENAME: 43377-OCS-s-cv-de105.dgn

DISTRICT	COUNTY	ROUTE	SECTION	SHEET
8-0	DAUPHIN	0083	OCS	13 OF 29
CITY OF HARRISBURG				

REVISION NUMBER	REVISIONS	DATE	BY

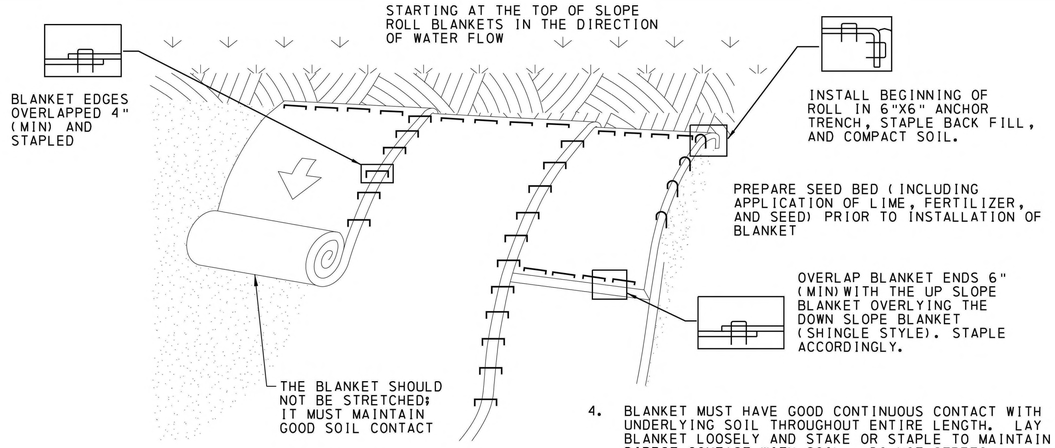

NOTES:

1. SEED AND SOIL AMENDMENTS MUST BE APPLIED ACCORDING TO THE RATES IN THE PLAN DRAWINGS PRIOR TO INSTALLING THE BLANKET.
2. PROVIDE ANCHOR TRENCH AT TOE OF SLOPE IN SIMILAR FASHION AS AT TOP OF SLOPE.
3. SLOPE SURFACE MUST BE FREE OF ROCKS, CLODS, STICKS, AND GRASS.
4. BLANKET MUST HAVE GOOD CONTINUOUS CONTACT WITH UNDERLYING SOIL THROUGHOUT ENTIRE LENGTH. LAY BLANKET LOOSELY AND STAKE OR STAPLE TO MAINTAIN DIRECT CONTACT WITH SOIL. DO NOT STRETCH BLANKET.
5. BLANKET MUST BE STAPLED IN ACCORDANCE WITH THE MANUFACTURER'S RECOMMENDATIONS.
6. BLANKETED AREAS MUST BE INSPECTED WEEKLY AND AFTER EACH RUNOFF EVENT UNTIL PERENNIAL VEGETATION IS ESTABLISHED TO A MINIMUM UNIFORM 70% COVERAGE THROUGHOUT THE BLANKETED AREA. DAMAGED OR DISPLACED BLANKETS MUST BE RESTORED OR REPLACED WITHIN 4 CALENDAR DAYS.

ROLLED EROSION CONTROL BLANKET

NOT TO SCALE
(ITEM 0806-0111)

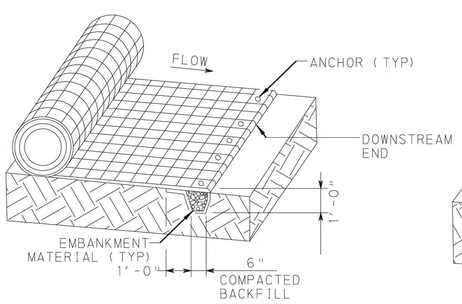

INITIAL ANCHOR TRENCH

SEE NOTE 1

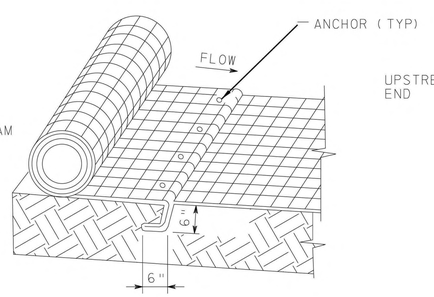

INTERMITTENT CHECK SLOT

SEE NOTE 2

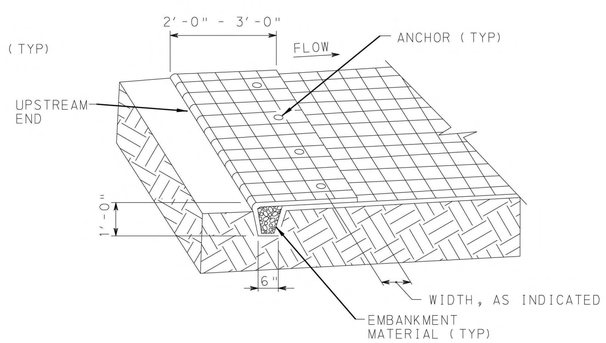

TERMINAL ANCHOR TRENCH

SEE NOTE 3

NOTES:

1. EXCAVATE INITIAL ANCHOR TRENCH 1'-0" DEEP AND 6" WIDE TO PREVENT UNDERMINING OF ROLLED EROSION CONTROL PRODUCTS.
2. EXCAVATE INTERMITTENT CHECK SLOT 6" DEEP AND 6" WIDE AT 25'-0" TO 30'-0" ALONG THE LENGTH OF THE ROLLED EROSION CONTROL PRODUCTS TO PREVENT LOOSE SOIL FROM BEING TRANSPORTED DOWNSLOPE BENEATH THE ROLLED EROSION CONTROL PRODUCT.
3. EXCAVATE TERMINAL ANCHOR TRENCH 1'-0" DEEP AND 6" WIDE TO ENSURE WATER FLOW TRANSITIONS SMOOTHLY ONTO THE ROLLED EROSION CONTROL PRODUCT WITHOUT SEPARATION FROM THE SOIL.
4. PLACE 2½ ANCHORS PER SY.
5. PROVIDE ANCHORING DEVICES IN ACCORDANCE WITH SECTION 806.2(d) OF PUBLICATION 408.
6. ROLLED EROSION CONTROL PRODUCTS ARE NOT TO BE INSTALLED ON ROCK AND AREAS INCAPABLE OF SUPPORTING VEGETATION (AREAS UNDER BRIDGES ETC.)

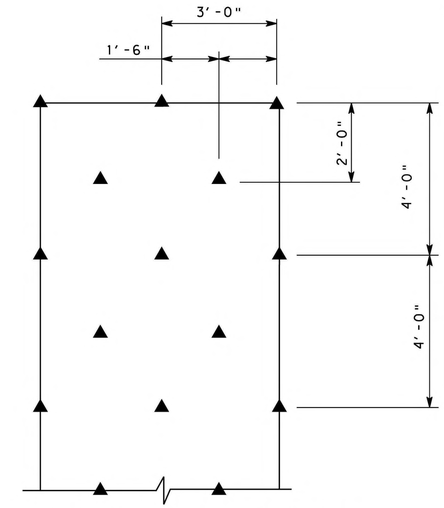

ANCHOR PATTERN FOR SLOPES BETWEEN 2:1 AND 1:1 (INCLUDING 2:1)

PLACE 2 ANCHORS/SY

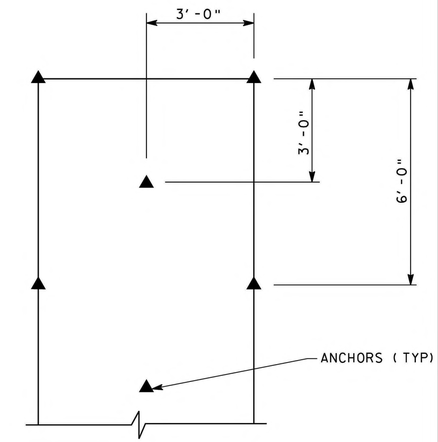

ANCHOR PATTERN FOR SLOPES FLATTER THAN 3:1

PLACE 1 ANCHOR/SY

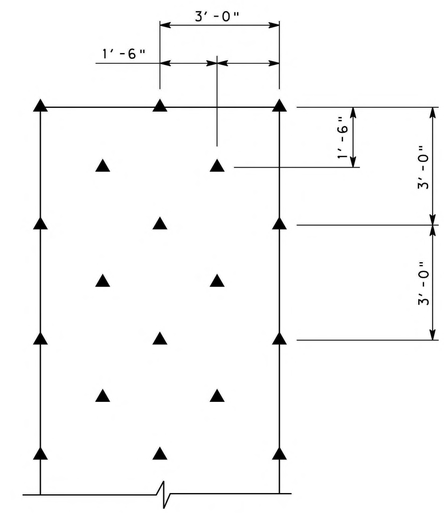

ANCHOR PATTERN FOR 1:1 OR STEEPER

PLACE 2½ ANCHORS/SY

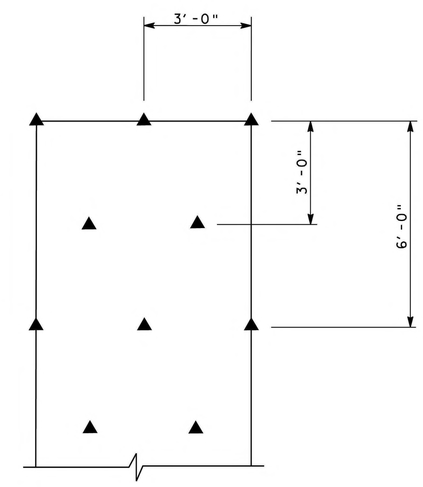

ANCHOR PATTERN FOR SLOPES BETWEEN 3:1 AND 2:1 (INCLUDING 3:1)

PLACE 1½ ANCHORS/SY

ANCHOR PATTERNS FOR SLOPES

NOT TO SCALE

COMMONWEALTH OF PENNSYLVANIA
REGISTERED PROFESSIONAL
JOACHIM J. ALFIERI
ENGINEER
039743-E

7/2/2025
FILENAME: 43377-OCS-s-cv-de106.dgn

DISTRICT	COUNTY	ROUTE	SECTION	SHEET
8-0	DAUPHIN	0083	OCS	14 OF 29
CITY OF HARRISBURG				

REVISION NUMBER	REVISIONS	DATE	BY

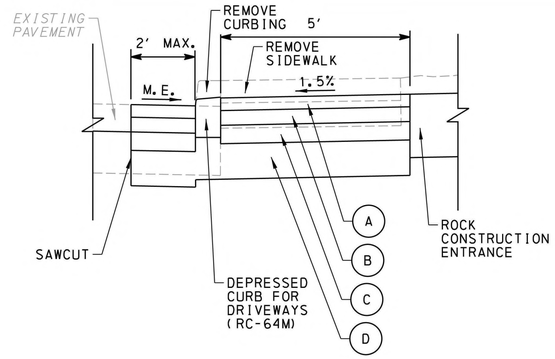

SECTION A-A VIEW

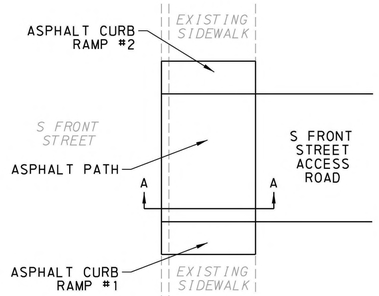

PLAN VIEW

S FRONT STREET - ASPHALT PATH

STA 53+78 TO STA 55+49
NOT TO SCALE

NOTES:

1. SAWCUT EXISTING PAVEMENT AND REMOVE EXISTING CONCRETE CURBING AND SIDEWALK.
2. INSTALL DEPRESSED CURB FOR DRIVEWAYS AND ADJACENT ASPHALT PAVEMENT.
3. SEE ASPHALT CURB RAMP DETAILS FOR ASPHALT PAVING WORK AT THE EXTENTS OF THE S FRONT STREET ACCESS ROAD DRIVEWAY CURB RETURNS. THESE DETAILS SHOW TRANSITIONS FROM EXISTING SIDEWALK (TO REMAIN) TO THE ASPHALT PATH.
4. CLEAN AND REPAIR ASPHALT PAVEMENT AS REQUIRED ONCE THE S FRONT STREET ACCESS ROAD IS REMOVED.

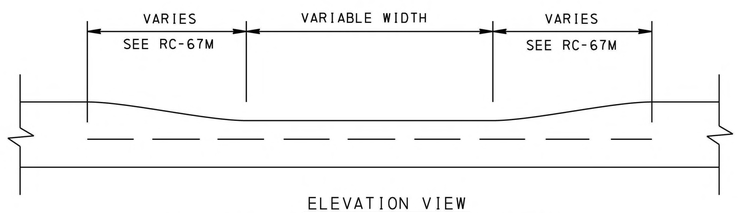

ELEVATION VIEW

DEPRESSED CURB FOR DRIVEWAYS

S FRONT STREET CONSTR ℄
(NOT TO SCALE)

STA 53+78.00 TO STA 53+88.00 - CURB RAMP TRANSITION FROM 6" REVEAL TO 1.5" REVEAL

STA 53+88.00 TO STA 55+39.00 - 1.5" REVEAL (DEPRESSED CURB FOR DRIVEWAYS)

STA 55+39.00 TO STA 55+49.00 - CURB RAMP TRANSITION FROM 1.5" REVEAL TO 6" REVEAL

NOTES:

1. REFER TO RC-64M FOR ADDITIONAL INFORMATION.

LEGEND

- (A) SUPERPAVE ASPHALT MIXTURE DESIGN, WEARING COURSE, PG 64S-22, < 0.3 MILLION ESALS, 9.5 MM MIX, 1½" DEPTH, SRL-L
- (B) SUPERPAVE ASPHALT MIXTURE DESIGN, BINDER COURSE, PG 64S-22, < 0.3 MILLION ESALs, 19.0 MM MIX, 2½" DEPTH
- (C) SUPERPAVE ASPHALT MIXTURE DESIGN, BASE COURSE, PG 64S-22, < 0.3 MILLION ESALs, 25.0 MM MIX, 3" DEPTH
- (D) SUBBASE, 6" DEPTH (NO. 2A)
- (E) TIMBER MAT (ITEM 9000-0026)
- (F) SUBBASE, CY (NO. 2A)
- (G) GEOTEXTILE, CLASS 4, TYPE A

INSTALL ASPHALT TACK COAT BETWEEN ALL PAVEMENT COURSES.

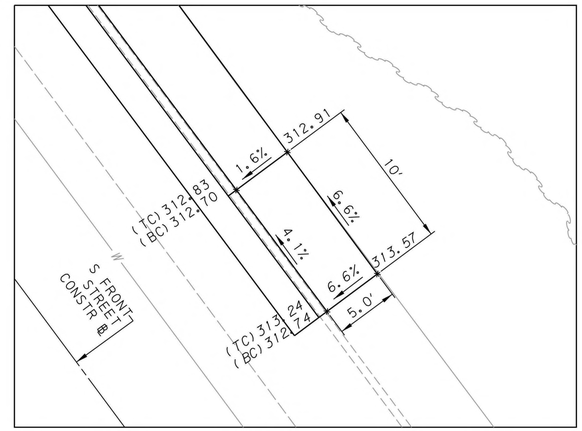

S FRONT STREET - ASPHALT CURB RAMP #1

STA 53+78 TO 53+88

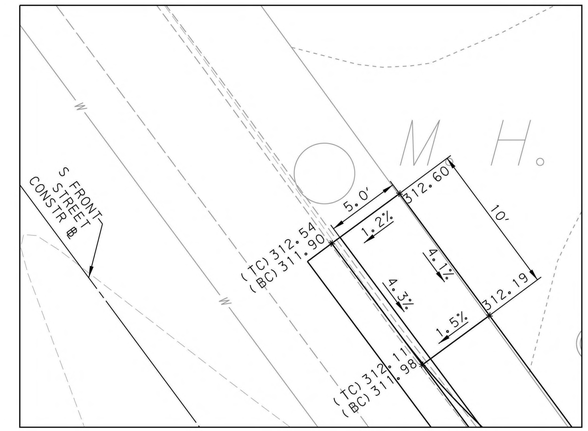

S FRONT STREET - ASPHALT CURB RAMP #2

STA 55+39 TO STA 55+49

NOTES:

1. CONTRACTOR TO FIELD VERIFY EXISTING SIDEWALK ELEVATIONS.

SCALE

0 5 10 FEET

DOCK STREET - ACCESS

NOTES:

1. CONTRACTOR TO UTILIZE EXISTING BALLASTED AREAS TO REACH LOCATIONS WITHIN RAILROAD PROPERTY.
2. CONTRACTOR TO MINIMIZE MOVEMENT OF BALLAST, AS WELL AS SOIL AND OTHER POLLUTANT DEPOSITS ONTO BALLASTED AREAS.
3. IN THE EVENT OF BALLAST CONTAMINATION, SEE SPECIAL PROVISION 9000-0027 FOR ADDITIONAL INFORMATION.
4. CONTRACTOR TO FOLLOW ALL REQUIREMENTS INCLUDED IN THE RAILROAD SPECIFICATIONS FOR ANY ACTIVITIES TAKING PLACE WITHIN RAILROAD PROPERTY.
5. COORDINATE WITH RAILROAD COMPANY CONTACT PERSONS (AMTRAK) PRIOR TO ACCESSING RAILROAD PROPERTY. COORDINATE WITH NORFOLK SOUTHERN AS REQUIRED BY THE SPECIAL RAILROAD RAILROAD SPECIAL PROVISIONS.

SYCAMORE STREET - ACCESS

NOTES:

1. NO EXCAVATION OR CONSTRUCTION IS REQUIRED. UTILIZE EXISTING CONCRETE AND ASPHALT PAVEMENT, WITHIN THE ACQUIRED PROPERTY LIMITS DENOTED ON THE PLAN.
2. CONTRACTOR TO MINIMIZE STORAGE OF MATERIALS WITHIN TCE'S ALONG SYCAMORE STREET ACCESS. PLACE MATERIALS, VEHICLES ETC. IN LOCATIONS TO MINIMIZE BUSINESS DISRUPTIONS.
3. CONTRACTOR TO MINIMIZE SOIL AND OTHER POLLUTANT DEPOSITS.
4. REFER TO DOCK STREET ACCESS NOTES FOR AREAS WITHIN RAILROAD PROPERTY.

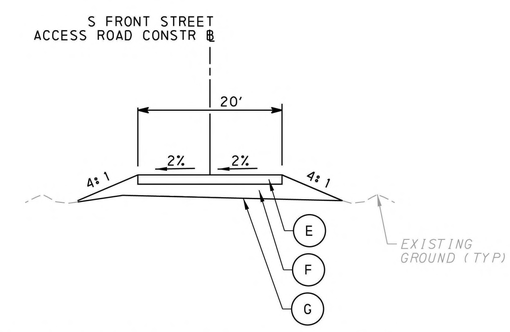

S FRONT STREET - ACCESS ROAD

STA 10+20 TO STA 15+25
NOT TO SCALE

NOTES:

1. CLEAR AND GRUB AS REQUIRED, INCLUDING DISPOSAL OF TRASH, WHICH IS INCIDENTIAL TO CLEARING AND GRUBBING.
2. IF DEWATERING IS REQUIRED PRIOR TO GROUND PREPARATION, WATER MUST BE DIVERTED AWAY FROM RAILROAD PROPERTY.
3. INSTALL GEOTEXTILE, SUBBASE AND TIMBER MATS AS SHOWN ON THE PLANS. REMOVE AND STORE ACCESS ROAD MATERIALS ON SITE, REINSTALL FOR STEEL DELIVERIES AND OTHER ACTIVITIES.
4. S FRONT STREET ACCESS ROAD SUBBASE AND TIMBER MATS BEGIN AT STA 11+25.00 AND TERMINATE AT 15+25.00, ROCK CONSTRUCTION ENTRANCE BEGINS AT STA 10+20.00 AND TERMINATES AT STA 11+25.00.
5. "S FRONT STREET ACCESS" CONTINUES AFTER THE PROPOSED ACCESS ROAD TERMINATES AT STA 15+25. REFER TO DOCK STREET ACCESS NOTES FOR AREAS WITHIN RAILROAD PROPERTY.

COMMONWEALTH OF PENNSYLVANIA
REGISTERED PROFESSIONAL
JOACHIM J. ALFIERI
ENGINEER
039743-E

7/2/2025
FILENAME: 43377-OCS-s-cv-de107.dgn

DISTRICT	COUNTY	ROUTE	SECTION	SHEET
8-0	DAUPHIN	0083	OCS	15 OF 29
CITY OF HARRISBURG				

REVISION NUMBER	REVISIONS	DATE	BY

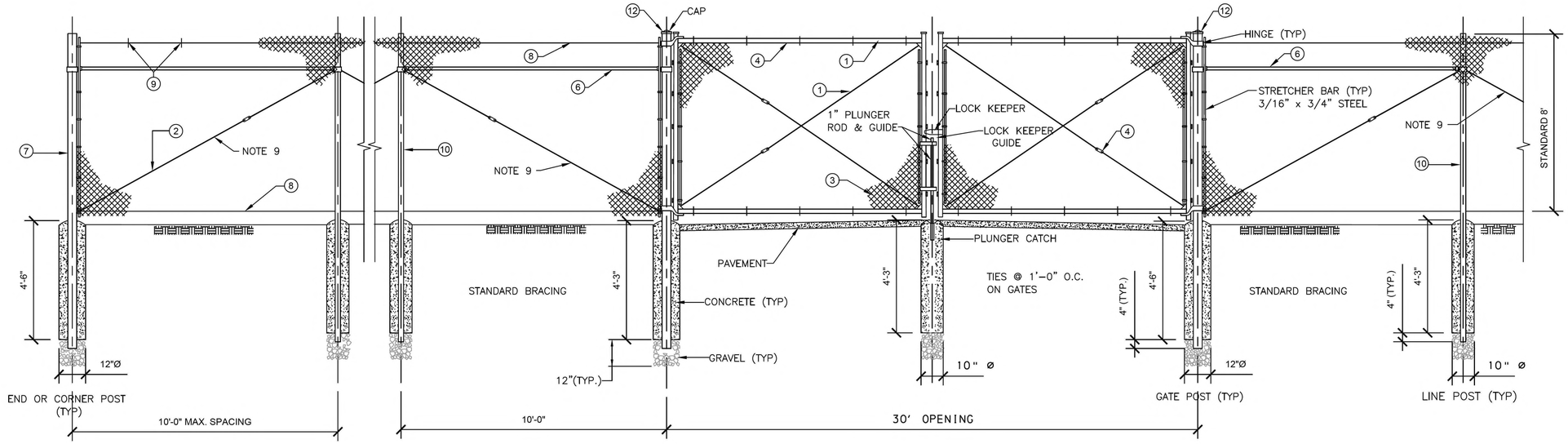

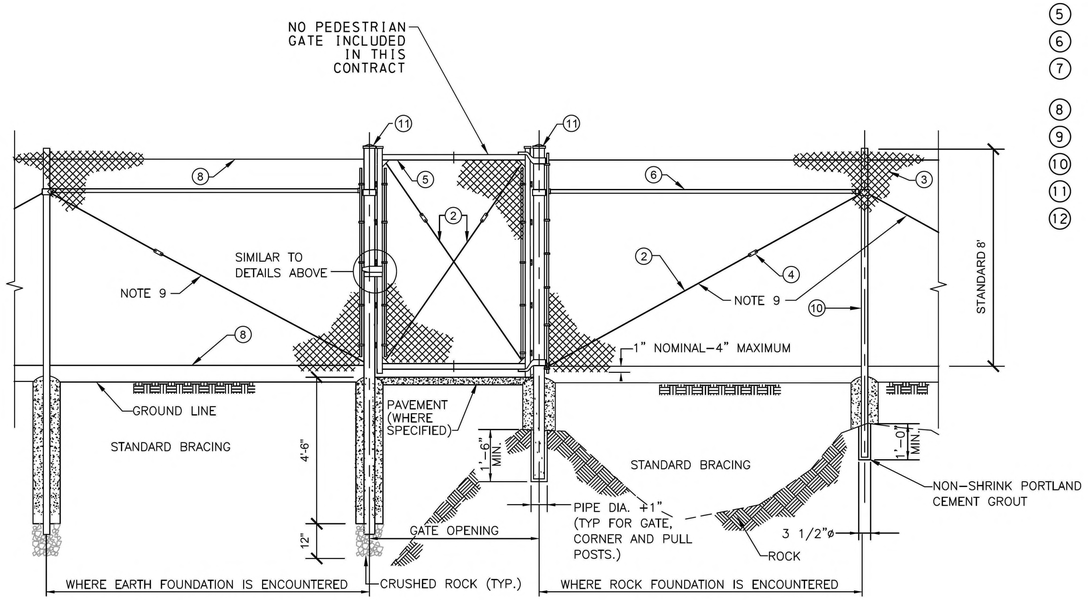

1. FRAME - 2" O.D.
2. BRACE - ⅜"ROD. (SEE NOTE 9)
3. 9 GA. TWO INCH MESH CHAIN LINK FENCE FABRIC.
4. ADJUSTABLE TIGHTENER & FITTING.
5. FRAME 1.5" O.D.
6. BRACE RAIL 1.66" O.D. AT 2.27 #/L.F.
7. CORNER POST OR END POST 4" O.D. PIPE AT 5.79 #/L.F.
8. TENSION WIRE - 0.177" O.D.
9. HOG RING 12 GA. WIRE AT 1'-6" O.C. ±
10. LINE POST 2.5" O.D. PIPE AT 3.65 #/L.F.
11. SINGLE-GATE POSTS - 3" O.D. PIPE AT 5.79 #/L.F.
12. DOUBLE-GATE POSTS - 4" O.D. PIPE AT 9.1 #/L.F.

1. AMTRAK TO PROVIDE 2-20 INCH LONG CHAINS AND PADLOCK. ONE END OF THE CHAIN SHALL BE SECURELY BOLTED TO THE FACE OF THE GATE FRAME.
2. ALL FENCE COMPONENTS SHALL BE GALVANIZED IN ACCORDANCE WITH ASTM A123, UNLESS OTHERWISE SPECIFIED.
3. ALL LINE POSTS SHALL BE SAME LENGTH UNLESS OTHERWISE SPECIFIED.
4. TENSION WIRE CLIPS AT 1'-6" O.C. 12 GA. WIRE.
5. CORNER POST SHALL BE INSTALLED WHERE CHANGE IN FENCE HORIZONTAL ALIGNMENT EXCEEDS 15 DEGREES.
6. THE STRUCTURAL FRAMEWORK IN EACH FENCE CONTRACT SECTION SHALL BE UNIFORM AND SHALL CONSIST OF ROUND TUBULAR SHAPES FOR LINE, END AND CORNER POSTS AS INDICATED.
7. ALL CONCRETE SHALL BE CLASS A CONCRETE, AND HAVE A MINIMUM COMPRESSIVE STRENGTH OF 3000 P.S.I. AT 28 DAYS. SEE PUB 408 SECTION 704.1 (b).
8. GRAVEL SHOWN AT THE BOTTOM OF ALL TUBULAR POSTS SHALL BE SUBBASE NO 2A.
9. DIAGONAL BRACING FOR ONE PANEL ON EACH SIDE OF GATE OPENINGS AND CORNERS.
10. NEW FENCE TO BE PLACED A MINIMUM OF 8'-6" FROM ℄ OF TRACK.
11. WIND LOADS SHALL BE IN ACCORDANCE WITH ASCE 7.
12. FILL ALL DEPRESSIONS GREATER THAN 3" WITH SUBBASE NO. 2A OR COMPACTED EARTH TO PREVENT ANIMALS FROM GOING UNDER THE FENCE.
13. INSTALL CONCRETE FOOTING OR DRIVE ANCHORS AT MAXIMUM INTERVALS OF 160' FOR ALL LINE POSTS.
14. PLACE END/CORNER POSTS AT ANGLE POINTS IN VERTICAL ALIGNMENT AT MAXIMUM INTERVALS OF 500' BETWEEN END AND/OR CORNER POSTS IN LEVEL TERRAIN AND/OR WHERE INDICATED.

NOTES:

1. SEE SPECIAL PROVISIONS FOR ADDITIONAL INFORMATION.

SECURITY FENCING CHAIN LINK TYPE 1

NOT TO SCALE

(ITEMS 9000-0016 AND 9000-0017)

COMMONWEALTH OF PENNSYLVANIA
REGISTERED PROFESSIONAL
JOACHIM J. ALFIERI
ENGINEER
039743-E

7/2/2025
FILENAME: 43377-OCS-s-cv-de108.dgn

DISTRICT	COUNTY	ROUTE	SECTION	SHEET
8-0	DAUPHIN	0083	OCS	16 OF 29
CITY OF HARRISBURG				

REVISION NUMBER	REVISIONS	DATE	BY

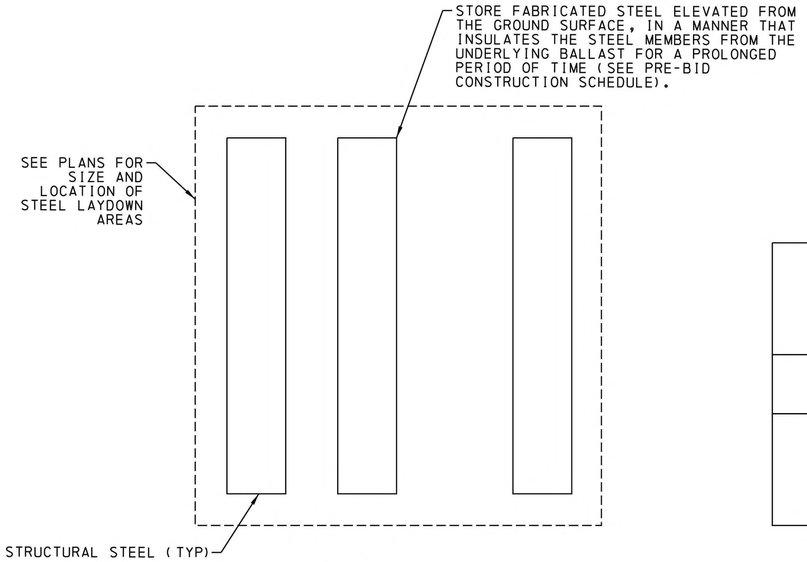

TOP VIEW

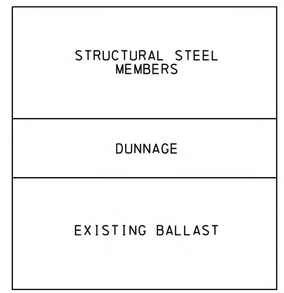

SIDE VIEW

FABRICATED STRUCTURAL STEEL LAYDOWN AREAS

NOT TO SCALE
(INCIDENTAL TO ITEM 5050-0040)

NOTES:

1. CONTRACTOR TO LAY TIMBER BLOCKING OR OTHER TYPE OF DUNNAGE ONTO RAILROAD BALLAST IN THE AREAS SHOWN ON THE PLANS OR LOCATIONS REQUIRED BY THE AMTRAK REPRESENTATIVE.
2. CONTRACTOR TO COORDINATE STEEL DELIVERY WITH AMTRAK REPRESENTATIVE AND DELIVER VIA THE ESTABLISHED ACCESS ROUTES OR AT THE DIRECTION OF THE AMTRAK REPRESENTATIVE.
3. CONTRACTOR TO PLACE STRUCTURAL STEEL WITHIN THE AREAS DENOTED ON THE PLANS, SECURLY ONTO THE DUNNAGE.

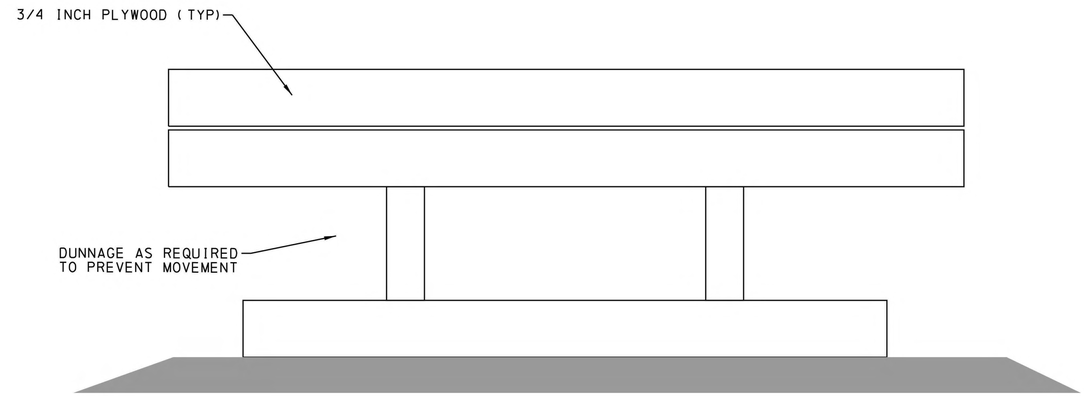

TEMPORARY RAILHEAD PROTECTION

NOT TO SCALE
(ITEM 9000-0029)

NOTES:

1. AT NO TIME MAY ANY TRACKED VEHICLES MAKE CONTACT WITH THE HEAD OF THE RAIL, REAGRDLESS OF TRACK MATERIAL.
2. CONTRACTOR IS RESPONSIBLE FOR ENSURING VEHICLE GROUND PRESSURE DOES NOT REQUIRE ALTERNATE RAILHEAD PROTECTION.
3. PROVIDE DUNNAGE AS REQUIRED TO PREVENT MOVEMENT OR SLIPPING DURING USE. DUNNAGE MUST NOT DAMAGE TIES OR RAILS, AND BE READILY REMOVABLE SIMILAR TO THE RAILROAD PROTECTION.
4. CONTRACTOR MAY PROVIDE ALTERNATE TEMPORARY RAILHEAD PROTECTION SUBJECT TO THE APPROVAL OF THE DEPARTMENT AND AMTRAK. ALTERNATE MATERIAL MUST NOT SHUNT TRACKS.
5. CONTRACTOR IS REQUIRED TO INSTALL AND REMOVE THE TEMPORARY RAILHEAD PROTECTION EACH SHIFT, AND TO STORE IT AT A LOCATION THAT DOES NOT INTERFERE WITH RAILROAD OPERATIONS.
6. CONTRACTOR TO COORDINATE WITH AMTRAK PRIOR TO ACCESSING RAILROAD PROPERTY, AND PRIOR TO INSTALLING TEMPORARY RAILHEAD PROTECTION.

COMMONWEALTH OF PENNSYLVANIA
REGISTERED PROFESSIONAL
JOACHIM J. ALFIERI
ENGINEER
039743-E

7/2/2025
FILENAME: 43377-OCS-s-cv-de109.dgn

SUMMARY

REVISION NO	REVISIONS	DATE	BY	DISTRICT	COUNTY	ROUTE	SECTION	SHEET
				08	DAUPHIN	83	OCS	17 OF 29
				CITY OF HARRISBURG				

♦ - SEE SPECIAL PROVISIONS

QUANTITY	ITEM NO / UNIT	DESCRIPTION	DESIGN NO	FOR TAB SEE SHEET	QUANTITY	ITEM NO / UNIT	DESCRIPTION	DESIGN NO	FOR TAB SEE SHEET	QUANTITY	ITEM NO / UNIT	DESCRIPTION	DESIGN NO	FOR TAB SEE SHEET	QUANTITY	ITEM NO / UNIT	DESCRIPTION	DESIGN NO	FOR TAB SEE SHEET
	0201 0001 LS	CLEARING AND GRUBBING		NO TAB	2	4849 0001 EACH	WASH RACK MODIFIED ♦		18-19		9000 0019 LS	NORFOLK SOUTHERN TRACK MONITORING ♦		20					
1649	0203 0001 CY	CLASS 1 EXCAVATION		18-19	1	0849 0010 EACH	ROCK CONSTRUCTION ENTRANCE		18-19	1	9000 0020 EACH	TEMPORARY GRADE CROSSING (ASPHALT WITH TIMBER FLANGEWAYS), FURNISH AND DELIVER ♦		18-19					
154	0203 0006 LF	SAW CUTTING		18-19	2	0855 0003 EACH	PUMPED WATER FILTER BAG		18-19	147	9000 0021 TON	RAILROAD BALLASTING, FURNISH AND DELIVER ♦		18-19					
913	0212 0014 SY	GEOTEXTILE, CLASS 4, TYPE A		18-19	3	0855 0004 EACH	REPLACEMENT PUMPED WATER FILTER BAG		18-19	12	9000 0022 EACH	UTILITY TEST HOLES ♦		20					
77	0313 0320 SY	SUPERPAVE ASPHALT MIXTURE DESIGN, BASE COURSE, PG 64S-22, < 0.3 MILLION ESALS, 25.0 MM MIX, 3" DEPTH		18-19	3	0860 0000 EACH	INLET FILTER BAG FOR TYPE M INLET		18-19	440	9000 0024 CY	EXPLORATORY TRENCHES ♦		18-19, 20					
77	0350 0106 SY	SUBBASE 6" DEPTH (NO. 2A)		18-19	2	0860 0002 EACH	INLET FILTER BAG FOR TYPE C INLET		18-19	5025	9000 0025 GAL	DEWATERING ON RAILROAD PROPERTY ♦		18-19, 20					
444	4350 0120 CY	SUBBASE (NO. 2A) MODIFIED ♦		18-19	965	0867 0018 LF	COMPOST FILTER SOCK, 18" DIAMETER		18-19	856	9000 0026 SY	TIMBER MATS ♦		18-19					
77	0413 0195 SY	SUPERPAVE ASPHALT MIXTURE DESIGN, WEARING COURSE, PG 64S-22, < 0.3 MILLION ESALS, 9.5 MM MIX, 1 1/2" DEPTH, SRL-L		18-19	282	0867 0022 LF	COMPOST FILTER SOCK, 24" DIAMETER		18-19	30000	9000 0351 DOLLA	DIRECT HIRE FOR PROTECTIVE SERVICES (FLAGGING) ♦		NO TAB					
77	0413 6035 SY	SUPERPAVE ASPHALT MIXTURE DESIGN, BINDER COURSE, PG 64S-22, < 0.3 MILLION ESALS, 19.0 MM MIX, 2 1/2" DEPTH		18-19		0901 0001 LS	MAINTENANCE AND PROTECTION OF TRAFFIC DURING CONSTRUCTION ♦		NO TAB		9000 5101 LS	ELECTRONIC TICKETING (E-TICKETING) FOR CONSTRUCTION AGGREGATE ♦		NO TAB					
154	0460 0001 SY	ASPHALT TACK COAT		18-19	147400	5050 0040 LB	FABRICATED STRUCTURAL STEEL, GALVANIZED MODIFIED ♦		20		9000 5103 LS	ELECTRONC TICKETING (E-TICKETING) FOR CONSTRUCTION CONCRETE ♦		NO TAB					
	4608 0001 LS	MOBILIZATION MODIFIED ♦		NO TAB		9000 0001 LS	AMTRAK TRACK MONITORING ♦		20		9000 5501 LS	ENVIRONMENTAL PRODUCT DECLARATIONS (EPDS) FOR CONSTRUCTION ASPHALT MIXTURES ♦		NO TAB					
	0609 0003 LS	INSPECTOR'S FIELD OFFICE AND INSPECTION FACILITIES, TYPE B		NO TAB	15000	9000 0002 DOLLA	AMTRAK PERMIT TO ENTER ♦		NO TAB										
	0609 0009 LS	EQUIPMENT PACKAGE ♦		NO TAB	4	9000 0003 EACH	DRILLED CAISON, DOWNGUY FOUNDATION ♦		20										
224	0624 0001 LF	RIGHT-OF-WAY FENCE, TYPE 1		18-19		9000 0004 LS	GROUNDING AND BONDING FOR OCS ♦		20										
1	4624 0725 EACH	VEHICULAR GATE FOR TYPE 1 RIGHT-OF-WAY FENCE, 15-FOOT OPENING MODIFIED ♦		18-19	6	9000 0005 EACH	DRILLED CAISON, COLUMN FOUNDATION ♦		20										
154	0630 0035 LF	PLAIN CEMENT CONCRETE CURB, 6" HEIGHT, INCLUDING REMOVAL OF EXISTING CURB		18-19		9000 0006 LS	VIBRATION MONITORING CONTROL ♦		20										
	4686 0050 LS	CONSTRUCTION SURVEYING, TYPE D INCLUDING UTILITIES AND FOUNDATIONS ♦		NO TAB	15000	9000 0007 DOLLA	NORFOLK SOUTHERN PERMIT TO ENTER ♦		NO TAB										
	0689 0005 LS	CPM SCHEDULE, WITH UPDATES		NO TAB		9000 0008 LS	HEALTH AND SAFETY PLAN ♦		NO TAB										
1000	0690 0001 DOLLA	INTERNAL FACILITATION		NO TAB		9000 0009 LS	SITE WORK PLAN ♦		NO TAB										
299	0802 0001 CY	TOPSOIL FURNISHED AND PLACED		18-19		9000 0010 LS	WASTE MATERIAL STAGING ♦		NO TAB										
59	0804 0027 LB	SEEDING AND SOIL SUPPLEMENTS - FORMULA L CLEAR ZONE MIX, INCLUDING MULCH		18-19	10000	9000 0014 DOLLA	LIQUID SAMPLING AND DISPOSAL ♦		NO TAB										
2	0804 0043 LB	SEEDING - FORMULA T TEMPORARY GRASS MIX		18-19	10000	9000 0015 DOLLA	CONTINGENT SOIL SAMPLING, ANALYSIS, DISPOSAL, AND REPORTING ♦		NO TAB										
567	0806 0111 SY	TEMPORARY SHORT-TERM, ROLLED EROSION CONTROL PRODUCT, TYPE 2B		18-19	70	9000 0016 LF	SECURITY FENCING CHAIN LINK TYPE 1 ♦		18-19										
5000	0845 0001 DOLLA	UNFORESEEN WATER POLLUTION CONTROL		NO TAB	1	9000 0017 EACH	SECURITY FENCING CHAIN LINK TYPE 1, GATE ♦		18-19										

COMMONWEALTH OF PENNSYLVANIA
REGISTERED PROFESSIONAL
JOACHIM J. ALFIERI
ENGINEER
PE039743

TABULATION OF QUANTITIES

ROADWAY

REVISION NO	REVISIONS	DATE	BY	DISTRICT	COUNTY	ROUTE	SECTION	SHEET
				08	DAUPHIN	83	OCS	18 OF 29
				CITY OF HARRISBURG				

COMMONWEALTH OF PENNSYLVANIA
REGISTERED PROFESSIONAL
JOACHIM J. ALFIERI
ENGINEER
PE039743

0203 0001 CY CLASS 1 EXCAVATION	0203 0006 LF SAW CUTTING	0212 0014 SY GEOTEXTILE, CLASS 4, TYPE A	0313 0320 SY SUPERPAVE ASPHALT MIXTURE DESIGN, BASE COURSE, PG 64S-22, < 0.3 MILLION ESALS, 25.0 MM MIX, 3" DEPTH	0350 0106 SY SUBBASE 6" DEPTH (NO. 2A)	4350 0120 CY SUBBASE (NO. 2A) MODIFIED	0413 0195 SY SUPERPAVE ASPHALT MIXTURE DESIGN, WEARING COURSE, PG 64S-22, < 0.3 MILLION ESALS, 9.5 MM MIX, 1 1/2" DEPTH, SRL-L	0413 6035 SY SUPERPAVE ASPHALT MIXTURE DESIGN, BINDER COURSE, PG 64S-22, < 0.3 MILLION ESALS, 19.0 MM MIX, 2 1/2" DEPTH	0460 0001 SY ASPHALT TACK COAT	0624 0001 LF RIGHT-OF-WAY FENCE, TYPE 1	4624 0725 EACH VEHICULAR GATE FOR TYPE 1 RIGHT-OF-WAY FENCE, 15-FOOT OPENING MODIFIED	0630 0035 LF PLAIN CEMENT CONCRETE CURB, 6" HEIGHT, INCLUDING REMOVAL OF EXISTING CURB	0802 0001 CY TOPSOIL FURNISHED AND PLACED	0804 0027 LB SEEDING AND SOIL SUPPLEMENTS - FORMULA L CLEAR ZONE MIX, INCLUDING MULCH	0804 0043 LB SEEDING - FORMULA T TEMPORARY GRASS MIX	0806 0111 SY TEMPORARY SHORT-TERM, ROLLED EROSION CONTROL PRODUCT, TYPE 2B	4849 0001 EACH WASH RACK MODIFIED	0849 0010 EACH ROCK CONSTRUCTION ENTRANCE	0855 0003 EACH PUMPED WATER FILTER BAG	0855 0004 EACH REPLACEMENT PUMPED WATER FILTER BAG	0860 0000 EACH INLET FILTER BAG FOR TYPE M INLET	0860 0002 EACH INLET FILTER BAG FOR TYPE C INLET	0867 0018 LF COMPOST FILTER SOCK, 18" DIAMETER	0867 0022 LF COMPOST FILTER SOCK, 24" DIAMETER	9000 0016 LF SECURITY FENCING CHAIN LINK TYPE 1	9000 0017 EACH SECURITY FENCING CHAIN LINK TYPE 1, GATE	9000 0020 EACH TEMPORARY GRADE CROSSING (ASPHALT WITH TIMBER FLANGEWAYS), FURNISH AND DELIVER	ITEM NUMBER UNIT REMARKS	SIDE	STATIONS
																												SR 0083		
																						381						ENTIRE PROJECT		0+00.00
729																												DOCK STREET ACCESS		0+00.00
																1			1	2				70	1			SYCAMORE STREET ACCESS		0+00.00
																												S FRONT STREET		
17	154		77	77		77	77	154			154																	S FRONT STREET	RT	53+50.00 to 56+25.00
																												S FRONT STREET CONSTRUCTION ACCESS		
886															200												1	S FRONT STREET ACCESS	LT / RT	0+00.00
17		913			444				224	1				2	367	1	1	2	2	1	2	584	282					S FRONT STREET ACCESS ROAD	LT / RT	10+00.00 to 15+25.00
												299	59															S FRONT STREET ACCESS ROAD RESTORATION	LT / RT	10+00.00 to 15+25.00
1649	154	913	77	77	444	77	77	154	224	1	154	299	59	2	567	2	1	2	3	3	2	965	282	70	1	1		TOTALS		

PROJECT ID: 6916 MPMS: 121921 ECMS: 121921 7/2/2025 2:58:06 PM

TABULATION OF QUANTITIES

ROADWAY

REVISION NO	REVISIONS	DATE	BY	DISTRICT	COUNTY	ROUTE	SECTION	SHEET
				08	DAUPHIN	83	OCS	19 OF 29
				CITY OF HARRISBURG				

RAILROAD BALLASTING, FURNISH AND DELIVER 9000 0021 TON	EXPLORATORY TRENCHES 9000 0024 CY	DEWATERING ON RAILROAD PROPERTY 9000 0025 GAL	TIMBER MATS 9000 0026 SY	EMBANKMENT (FOR INFORMATION ONLY) CY	ITEM NUMBER UNIT	REMARKS	SIDE	STATIONS
						SR 0083		
				94		ENTIRE PROJECT		0+00.00
147						DOCK STREET ACCESS		0+00.00
		25				SYCAMORE STREET ACCESS		0+00.00
						S FRONT STREET		
						S FRONT STREET	RT	53+50.00 to 56+25.00
						S FRONT STREET CONSTRUCTION ACCESS		
	190					S FRONT STREET ACCESS	LT / RT	0+00.00
			856	17		S FRONT STREET ACCESS ROAD	LT / RT	10+00.00 to 15+25.00
						S FRONT STREET ACCESS ROAD RESTORATION	LT / RT	10+00.00 to 15+25.00
147	190	25	856	111		TOTALS		

COMMONWEALTH OF PENNSYLVANIA
REGISTERED PROFESSIONAL ENGINEER
JOACHIM J. ALFIERI
PE039743

PROJECT ID: 6916 MPMS: 121921 ECMS: 121921 7/2/2025 2:58:06 PM

TABULATION OF QUANTITIES

ELECTRIC TRACTION

REVISION NO	REVISIONS	DATE	BY	DISTRICT	COUNTY	ROUTE	SECTION	SHEET
				08	DAUPHIN	83	OCS	20 OF 29
				CITY OF HARRISBURG				

FABRICATED STRUCTURAL STEEL, GALVANIZED MODIFIED	AMTRAK TRACK MONITORING	DRILLED CAISON, DOWNGUY FOUNDATION	GROUNDING AND BONDING FOR OCS	DRILLED CAISON, COLUMN FOUNDATION	VIBRATION MONITORING CONTROL	NORFOLK SOUTHERN TRACK MONITORING	UTILITY TEST HOLES	EXPLORATORY TRENCHES	DEWATERING ON RAILROAD PROPERTY	REMARKS	SIDE	STATIONS
5050 0040 LB	9000 0001 LS	9000 0003 EACH	9000 0004 LS	9000 0005 EACH	9000 0006 LS	9000 0019 LS	9000 0022 EACH	9000 0024 CY	9000 0025 GAL	ITEM NUMBER UNIT		
										SR 0083		
	X		X		X	X				ENTIRE PROJECT		0+00.00
		1					6	25	500	P-1661 1/2 SOUTH DOWNGUY FOUNDATION, STA 5399+69	RT	236+42.00
				1				25	500	P-1661 1/2 SOUTH FOUNDATION, STA 5399+69	RT	236+42.00
70000										P-1661 1/2 STRUCTURE	RT	236+42.00
				1				25	500	P-1662 1/2 SOUTH FOUNDATION, STA 5400+94	RT	236+54.00
15400										P-1662 1/2 STRUCTURE	RT	236+54.00
				1				25	500	P-1663 1/2 SOUTH FOUNDATION, STA 5403+39	LT	236+83.00
		1						25	500	P-1663 1/2 SOUTH DOWNGUY FOUNDATION, STA 5403+39	LT	236+84.00
62000										P-1663 1/2 STRUCTURE	LT	236+84.00
		1					6	25	500	P-1661 1/2 NORTH DOWNGUY FOUNDATION, STA 5399+69	RT	237+37.00
				1				25	500	P-1661 1/2 NORTH FOUNDATION, STA 5399+69	RT	237+37.00
				1				25	500	P-1663 1/2 NORTH FOUNDATION, STA 5403+39	LT	237+41.00
		1						25	500	P-1663 1/2 NORTH DOWNGUY FOUNDATION, STA 5403+39	LT	237+45.00
				1				25	500	P-1662 1/2 NORTH FOUNDATION, STA 5400+94	RT	237+45.00
147400	---	4	---	6	---	---	12	250	5000	TOTALS		

COMMONWEALTH OF PENNSYLVANIA
REGISTERED PROFESSIONAL ENGINEER
JOACHIM J. ALFIERI
PE039743

PROJECT ID: 6916 MPMS: 121921 ECMS: 121921 7/2/2025 3:02:52 PM

DISTRICT	COUNTY	ROUTE	SECTION	SHEET
8-0	DAUPHIN	0083	OCS	21 OF 29
CITY OF HARRISBURG				

REVISION NUMBER	REVISIONS	DATE	BY

BM-G075 ELEV 311.860
SR 0083 NB STA 231+12.89, 114.17' RT
BRASS DISK ON CATCH BASIN HEADWALL

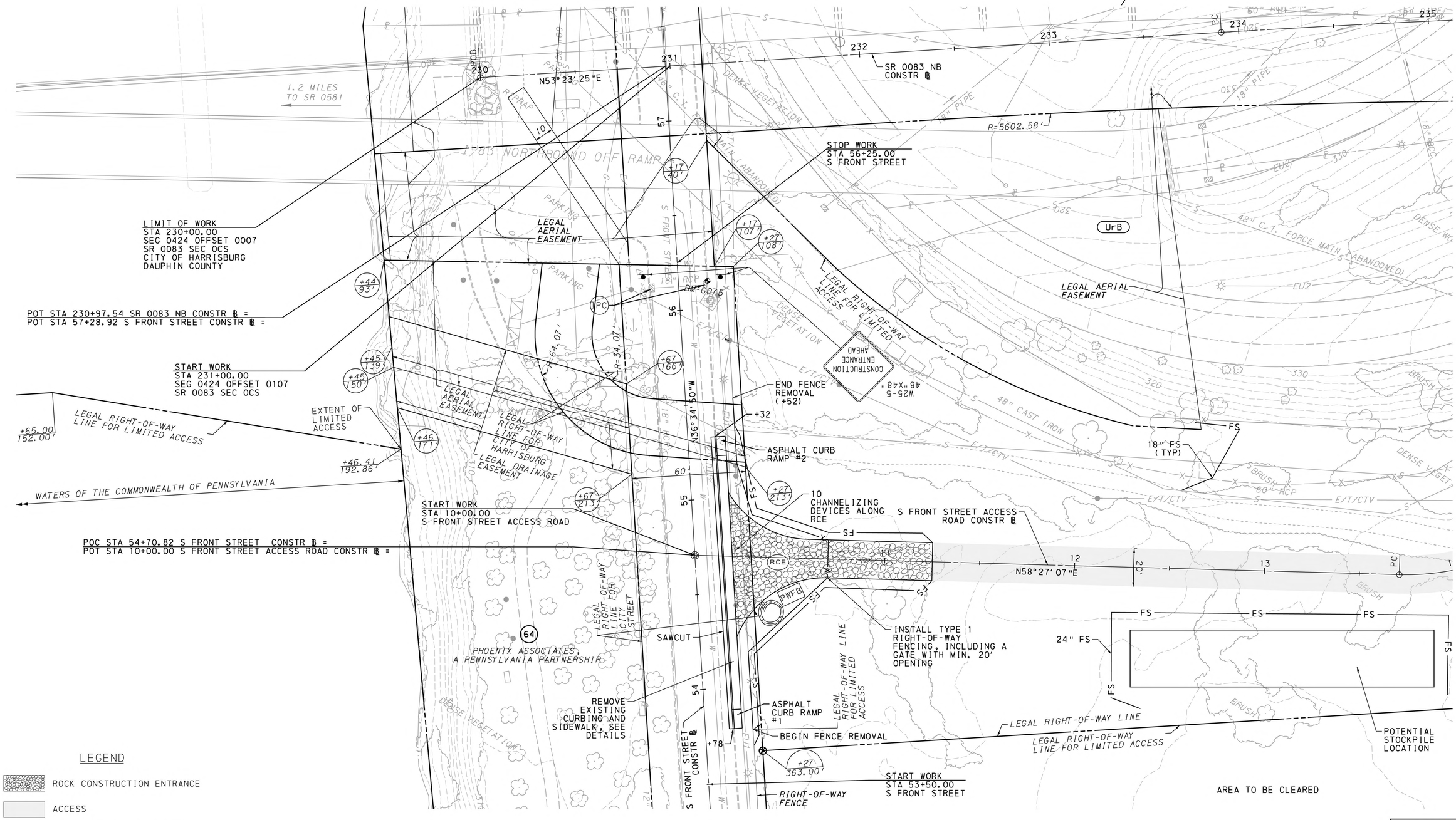

LEGEND

- ROCK CONSTRUCTION ENTRANCE
- ACCESS
- TEMPORARY GRADE CROSSING

SCALE

0 25 50 FEET

FOR S FRONT ST ACCESS ROAD PROFILE, SEE SHEET 29

SURVEY BOOK NO. 7252 & 7253

COMMONWEALTH OF PENNSYLVANIA
REGISTERED PROFESSIONAL
JOACHIM J. ALFIERI
ENGINEER
039743-E

SEE SHEET 22 OF 29

7/2/2025
FILENAME: 43377-OCS-s-cv-pln01.dgn

SEE SHEET 25 OF 29

DISTRICT	COUNTY	ROUTE	SECTION	SHEET
8-0	DAUPHIN	0083	OCS	22 OF 29
CITY OF HARRISBURG				

REVISION NUMBER	REVISIONS	DATE	BY

NOTES

1. CONTRACTOR TO FOLLOW, AMONG OTHER REQUIREMENTS, EP 3014 FOR COMPLETION OF EXPLORATORY TRENCHING PRIOR TO EXCAVATING WITHIN RAILROAD PROPERTY. EXPLORATORY TRENCHING ARE PAID UNDER ITEM 9000-0024 EXPLORATORY TRENCHING.

2. CONTRACTOR TO COMPLETE UTILITY TEST HOLES ⊕ TO VERIFY LOCATION OF EXISTING UTILITIES PRIOR TO FOUNDATION DRILLING. THIS WORK IS PAID UNDER ITEM 9000-0022 UTILITY TEST HOLES.

SCALE

0 25 50 FEET

LEGEND

- ROCK CONSTRUCTION ENTRANCE
- ACCESS
- TEMPORARY GRADE CROSSING

COMMONWEALTH OF PENNSYLVANIA
REGISTERED PROFESSIONAL
JOACHIM J. ALFIERI
ENGINEER
039743-E

FOR S FRONT ST ACCESS ROAD PROFILE, SEE SHEET 29

SEE SHEET 23 OF 29

SURVEY BOOK NO. 7252 & 7253

SEE SHEET 21 OF 29

7/2/2025
FILENAME: 43377-OCS-s-cv-pln02.dgn

SEE SHEET 22 OF 29

DISTRICT	COUNTY	ROUTE	SECTION	SHEET
8-0	DAUPHIN	0083	OCS	23 OF 29
CITY OF HARRISBURG				

REVISION NUMBER	REVISIONS	DATE	BY

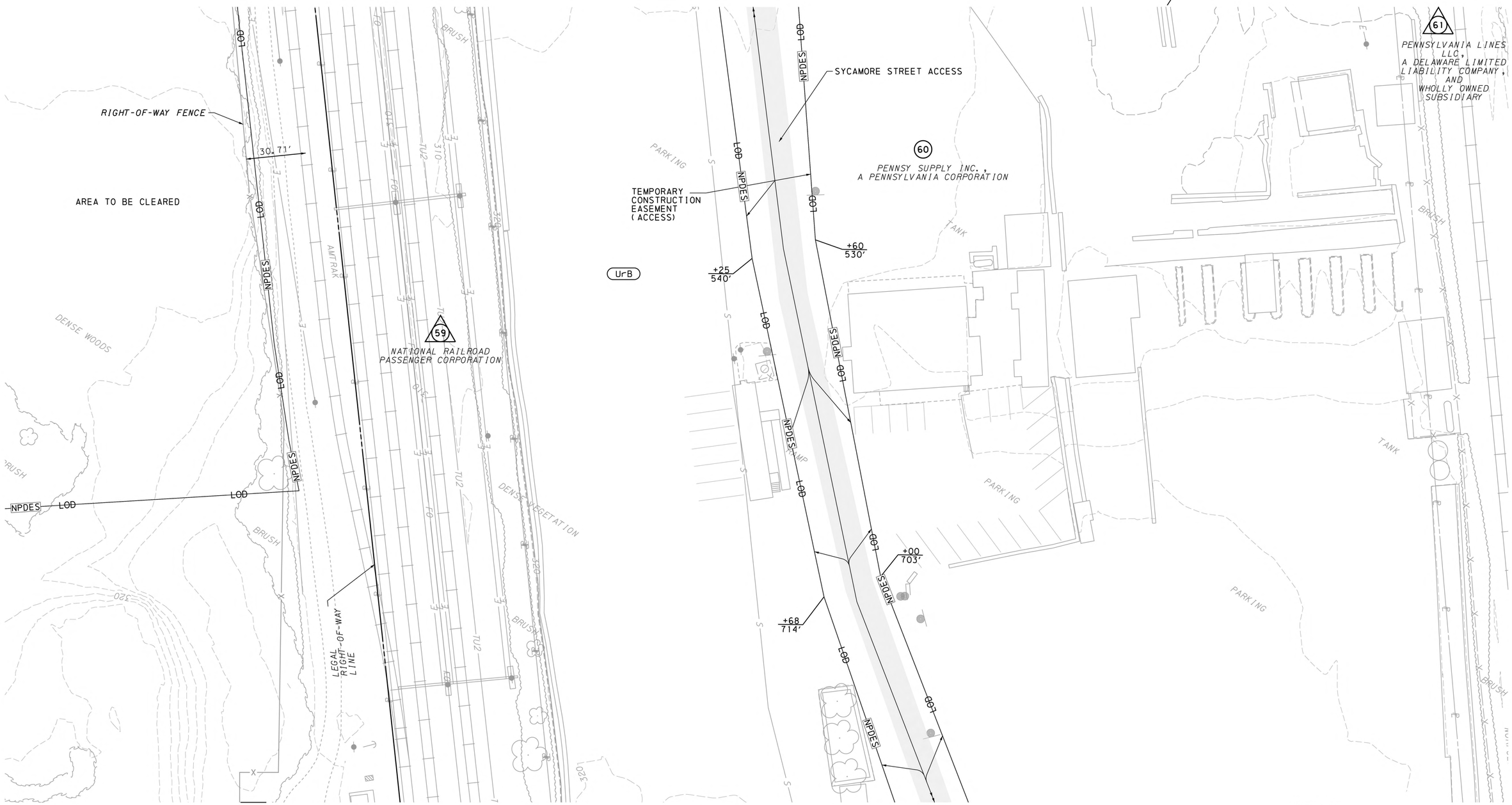

LEGEND

- ROCK CONSTRUCTION ENTRANCE
- ACCESS
- TEMPORARY GRADE CROSSING

SCALE

0 25 50 FEET

COMMONWEALTH OF PENNSYLVANIA
REGISTERED PROFESSIONAL
JOACHIM J. ALFIERI
ENGINEER
039743-E

SEE SHEET 24 OF 29

SURVEY BOOK NO. 7252 & 7253

7/2/2025
FILENAME: 43377-OCS-s-cv-pln03.dgn

SEE SHEET 23 OF 29

DISTRICT	COUNTY	ROUTE	SECTION	SHEET
8-0	DAUPHIN	0083	OCS	24 OF 29
CITY OF HARRISBURG				

REVISION NUMBER	REVISIONS	DATE	BY

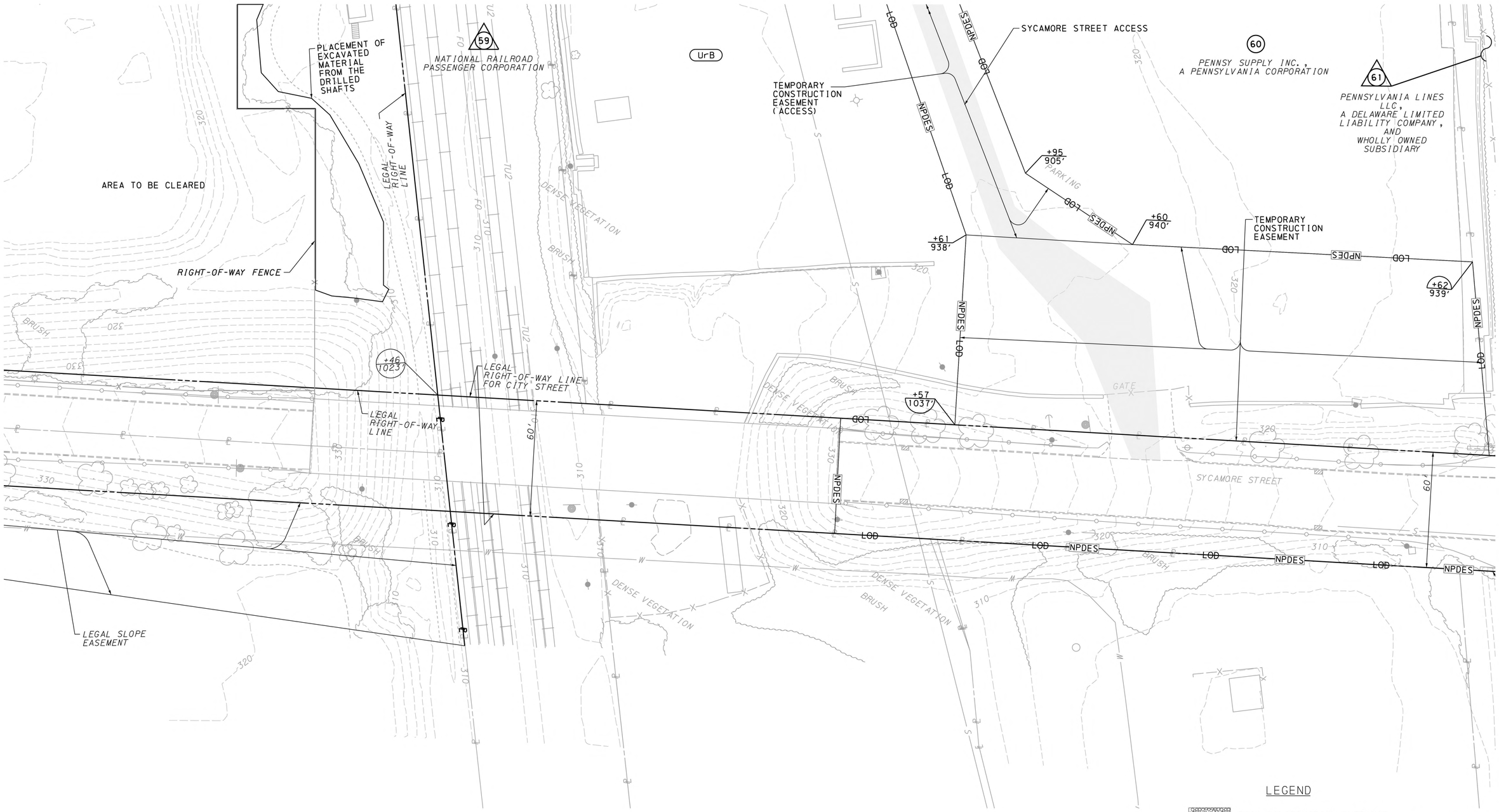

NOTES

1. TRANSPORT AND SPREAD EXCAVATED MATERIAL WITHIN LIMITS SHOWN. SPREAD MATERIAL ALONG THE EXISTING RAILROAD EMBANKMENT IN SUCH A WAY TO NOT BLOCK TRACK OR ACCESS ROAD DRAINAGE. DO NOT PILE MATERIAL OFF THE END OF THE EXISTING TRACK.

SCALE

0 25 50 FEET

LEGEND

- ROCK CONSTRUCTION ENTRANCE
- ACCESS
- TEMPORARY GRADE CROSSING

COMMONWEALTH OF PENNSYLVANIA
REGISTERED PROFESSIONAL
JOACHIM J. ALFIERI
ENGINEER
039743-E

SURVEY BOOK NO. 7252 & 7253

7/2/2025
FILENAME: 43377-OCS-s-cv-pln04.dgn

SEE SHEET 26 OF 29

DISTRICT	COUNTY	ROUTE	SECTION	SHEET
8-0	DAUPHIN	0083	OCS	25 OF 29
CITY OF HARRISBURG				

REVISION NUMBER	REVISIONS	DATE	BY

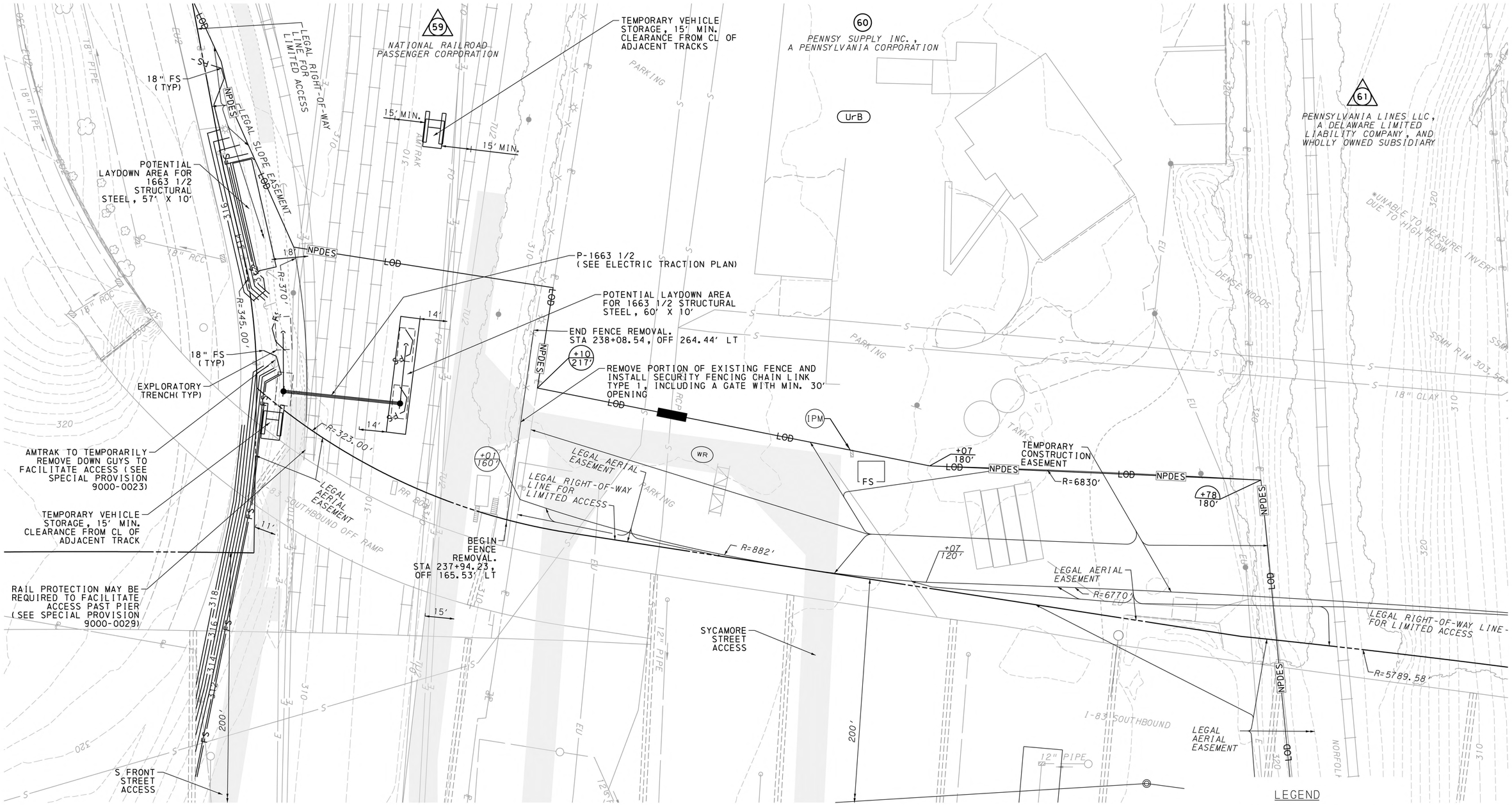

NOTES

1. CONTRACTOR TO FOLLOW, AMONG OTHER REQUIREMENTS, EP 3014 FOR COMPLETION OF EXPLORATORY TRENCHING PRIOR TO EXCAVATING WITHIN RAILROAD PROPERTY. EXPLORATORY TRENCHING ARE PAID UNDER ITEM 9000-0024 EXPLORATORY TRENCHING.

SCALE

0 25 50 FEET

LEGEND

- ROCK CONSTRUCTION ENTRANCE
- ACCESS
- TEMPORARY GRADE CROSSING

COMMONWEALTH OF PENNSYLVANIA
REGISTERED PROFESSIONAL
JOACHIM J. ALFIERI
ENGINEER
039743-E

SEE SHEET 22 OF 29

SURVEY BOOK NO. 7252 & 7253

7/2/2025
FILENAME: 43377-OCS-s-cv-pln05.dgn

SEE SHEET 27 OF 29

DISTRICT	COUNTY	ROUTE	SECTION	SHEET
8-0	DAUPHIN	0083	OCS	26 OF 29
CITY OF HARRISBURG				

REVISION NUMBER	REVISIONS	DATE	BY

COMMONWEALTH OF PENNSYLVANIA
REGISTERED PROFESSIONAL
JOACHIM J. ALFIERI
ENGINEER
039743-E

SEE SHEET 25 OF 29

SURVEY BOOK NO. 7252 & 7253

7/2/2025
FILENAME: 43377-OCS-s-cv-pln06.dgn

SEE SHEET 28 OF 29

DISTRICT	COUNTY	ROUTE	SECTION	SHEET
8-0	DAUPHIN	0083	OCS	27 OF 29
CITY OF HARRISBURG				

REVISION NUMBER	REVISIONS	DATE	BY

COMMONWEALTH OF PENNSYLVANIA
REGISTERED PROFESSIONAL
JOACHIM J. ALFIERI
ENGINEER
039743-E

SEE SHEET 26 OF 29

SURVEY BOOK NO. 7252 & 7253

7/2/2025
FILENAME: 43377-OCS-s-cv-pln07.dgn

DISTRICT	COUNTY	ROUTE	SECTION	SHEET
8-0	DAUPHIN	0083	OCS	28 OF 29
CITY OF HARRISBURG				

REVISION NUMBER	REVISIONS	DATE	BY

LEGEND

- ROCK CONSTRUCTION ENTRANCE
- ACCESS
- TEMPORARY GRADE CROSSING

SCALE

0 25 50 FEET

COMMONWEALTH OF PENNSYLVANIA
REGISTERED PROFESSIONAL ENGINEER
JOACHIM J. ALFIERI
039743-E

SEE SHEET 27 OF 29

SURVEY BOOK NO. 7252 & 7253

7/2/2025
FILENAME: 43377-OCS-s-cv-pln08.dgn

DISTRICT	COUNTY	ROUTE	SECTION	SHEET
8-0	DAUPHIN	0083	OCS	29 OF 29
CITY OF HARRISBURG				

REVISION NUMBER	REVISIONS	DATE	BY

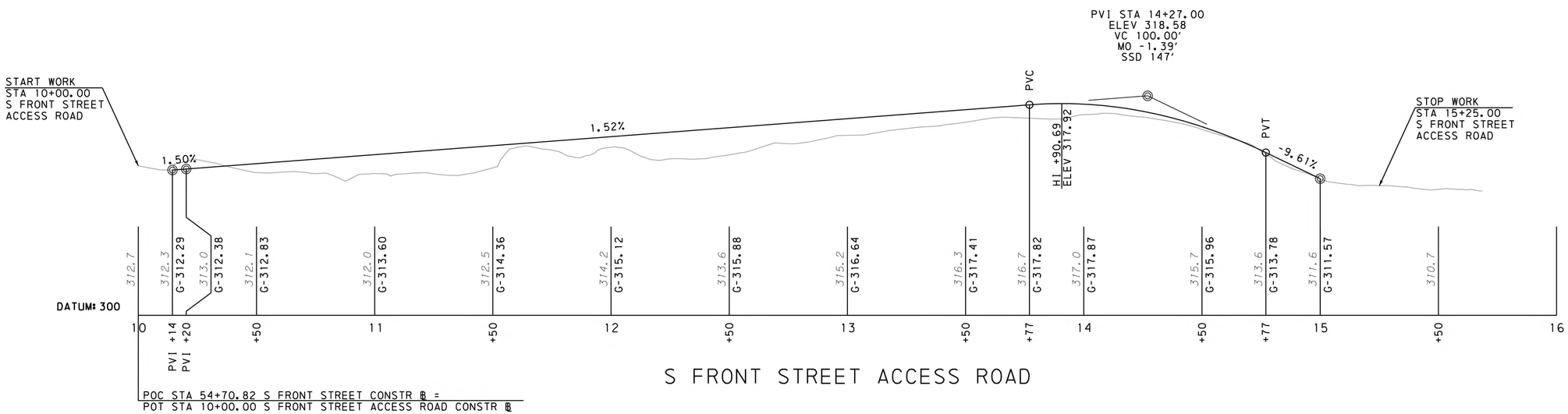

SCALE

HORIZONTAL 0 25 50 FEET

VERTICAL 0 5 10 FEET

FOR PLAN, SEE SHEETS 21 & 22

SURVEY BOOK NO. 7252 & 7253

COMMONWEALTH OF PENNSYLVANIA
REGISTERED PROFESSIONAL
JOACHIM J. ALFIERI
ENGINEER
039743-E

7/2/2025
FILENAME: 43377-OCS-s-cv-pr101.dgn

KEYSTONE CORRIDOR
I-83 RECONSTRUCTION EARLY ACTION
ELECTRIC TRACTION
HARRISBURG, PA

No.	Revisions	Date	By

Office of Engineering
Engineering Design
National Railroad Passenger Corporation
30th Street Station, Philadelphia, Pennsylvania 19104

Approved	Date

COMMONWEALTH OF PENNSYLVANIA
REGISTERED PROFESSIONAL
MATTHEW JOHN SCHREFFLER
ENGINEER
PE096326

HNTB Corporation
1650 Arch Street, Suite 1700
Philadelphia, PA 19103
215-568-6500

KEYSTONE CORRIDOR
I-83 RECONSTRUCTION EARLY ACTION
ELECTRIC TRACTION
COVER SHEET

Designed	PJC	Drawn	PJC	Checked	MJS	Date	06/13/2025

Job No.	43377
File Name	43377-S-ET-COV01
Sheet No.	1 OF 77
Dwg. No.	ET-000

PLOT SCALE: AS SHOWN
6/6/2025 1:41:44 PM
43377-s-et-cov01.dwg

LIST OF DRAWINGS

SHEET NO.	DRAWING	TITLE
1	ET-000	COVER SHEET
2	ET-001	DRAWING INDEX
3	ET-002	GENERAL NOTES & DIVISION OF WORK
4	ET-003	LEGEND AND ABBREVIATIONS
5	ET-004	CONDUCTOR PARTICULARS
6	ET-005	TENSION INSTALLATION CHART
7	ET-006	SECTIONALIZING PLANS
8	ET-010	CONSTRUCTION STAGING (1 OF 3)
9	ET-011	CONTRUCTION STAGING (2 OF 3)
10	ET-012	CONSTRUCTION STAGING (3 OF 3)
11	ET-100	EXISTING OCS WIRING LAYOUT
12	ET-101	PROPOSED OCS WIRING LAYOUT
13	ET-102	EXISTING ANCILLARY WIRING LAYOUT
14	ET-103	PROPOSED ANCILLARY WIRING LAYOUT
15	ET-300	TRACK 1 EXISTING OCS WIRE PROFILE (1 OF 2)
16	ET-301	TRACK 1 EXISTING OCS WIRE PROFILE (2 OF 2)
17	ET-302	TRACK 1 PROPOSED OCS WIRE PROFILE (1 OF 2)
18	ET-303	TRACK 1 PROPOSED OCS WIRE PROFILE (2 OF 2)
19	ET-304	TRACK 2 EXISTING OCS WIRE PROFILE (1 OF 2)
20	ET-305	TRACK 2 EXISTING OCS WIRE PROFILE (2 OF 2)
21	ET-306	TRACK 2 PROPOSED OCS WIRE PROFILE (1 OF 2)
22	ET-307	TRACK 2 PROPOSED OCS WIRE PROFILE (2 OF 2)
23	ET-308	EXISTING ANCILLARY WIRE PROFILE (1 OF 4)
24	ET-309	EXISTING ANCILLARY WIRE PROFILE (2 OF 4)
25	ET-310	EXISTING ANCILLARY WIRE PROFILE (3 OF 4)
26	ET-311	EXISTING ANCILLARY WIRE PROFILE (4 OF 4)
27	ET-312	PROPOSED ANCILLARY WIRE PROFILE (1 OF 4)
28	ET-313	PROPOSED ANCILLARY WIRE PROFILE (2 OF 4)
29	ET-314	PROPOSED ANCILLARY WIRE PROFILE (3 OF 4)
30	ET-315	PROPOSED ANCILLARY WIRE PROFILE (4 OF 4)
31	ET-400	ERECTION DIAGRAM P-1666 (EXISTING)
32	ET-401	ERECTION DIAGRAM P-1665 (EXISTING)
33	ET-402	ERECTION DIAGRAM P-1664 (EXISTING TBR)
34	ET-403	ERECTION DIAGRAM P-1663 1/2 (PROPOSED) (1 OF 2)
35	ET-404	ERECTION DIAGRAM P-1663 1/2 (PROPOSED) (2 OF 2)
36	ET-405	ERECTION DIAGRAM P-1663 (EXISTING TBR)
37	ET-406	ERECTION DIAGRAM P-1662 1/2 (PROPOSED)
38	ET-407	ERECTION DIAGRAM P-1662 (EXISTING TBR)
41	ET-410	ERECTION DIAGRAM P-1661A (EXISTING TBR)
39	ET-408	ERECTION DIAGRAM P-1661 1/2 (PROPOSED)(1 OF 2)
40	ET-409	ERECTION DIAGRAM P-1661 1/2 (PROPOSED)(2 OF 2)
42	ET-411	ERECTION DIAGRAM P-1661 (EXISTING)
43	ET-412	ERECTION DIAGRAM P-1660 (EXISTING)
44	ET-413	ERECTION DIAGRAM P-1659 (EXISTING)
45	ET-414	ERECTION DIAGRAM P-1658 (EXISTING)
46	ET-500	CATENARY ASSEMBLIES (1 OF 8)
47	ET-501	CATENARY ASSEMBLIES (2 OF 8)
48	ET-502	CATENARY ASSEMBLIES (3 OF 8)
49	ET-503	CATENARY ASSEMBLIES (4 OF 8)
50	ET-504	CATENARY ASSEMBLIES (5 OF 8)
51	ET-505	CATENARY ASSEMBLIES (6 OF 8)
52	ET-506	CATENARY ASSEMBLIES (7 OF 8)
53	ET-507	CATENARY ASSEMBLIES (8 OF 8)
54	ET-600	STEEL DETAILS (1 OF 16)
55	ET-601	STEEL DETAILS (2 OF 16)
56	ET-602	STEEL DETAILS (3 OF 16)
57	ET-603	STEEL DETAILS (4 OF 16)
58	ET-604	STEEL DETAILS (5 OF 16)
59	ET-605	STEEL DETAILS (6 OF 16)
60	ET-606	STEEL DETAILS (7 OF 16)
61	ET-607	STEEL DETAILS (8 OF 16)
62	ET-608	STEEL DETAILS (9 OF 16)
63	ET-609	STEEL DETAILS (10 OF 16)
64	ET-610	STEEL DETAILS (11 OF 16)
65	ET-611	STEEL DETAILS (12 OF 16)
66	ET-612	STEEL DETAILS (13 OF 16)
67	ET-613	STEEL DETAILS (14 OF 16)
68	ET-614	STEEL DETAILS (15 OF 16)
69	ET-615	STEEL DETAILS (16 OF 16)
70	ET-616	FOUNDATION DETAILS (1 OF 3)
71	ET-617	FOUNDATION DETAILS (2 OF 3)
72	ET-618	FOUNDATION DETAILS (3 OF 3)
73	ET-619	FOUNDATION SCHEDULE
74	ET-700	OCS ASSY BOM
75	ET-701	OCS MASTER ASSEMBLY BOM (1 OF 2)
76	ET-702	OCS MASTER ASSEMBLY BOM (2 OF 2)
77	ET-703	STEEL AND FOUNDATION BOM

PLOT SCALE: AS SHOWN
6/11/2025 2:46:07 PM 43377-s-et-idx01.dwg

No.	Revisions	Date	By

AMTRAK

Office of Engineering
Engineering Design
National Railroad Passenger Corporation
30th Street Station, Philadelphia, Pennsylvania 19104

Approved	Date

COMMONWEALTH OF PENNSYLVANIA
REGISTERED PROFESSIONAL ENGINEER
MATTHEW JOHN SCHREFFLER
PE096326

HNTB
HNTB Corporation
1650 Arch Street, Suite 1700
Philadelphia, PA 19103
215-568-6500

KEYSTONE CORRIDOR
I-83 RECONSTRUCTION EARLY ACTION
ELECTRIC TRACTION

DRAWING INDEX

Designed PJC | Drawn PJC | Checked MJS | Date 06/13/2025

Job No. 43377
File Name 43377-S-ET-IDX01
Sheet No. 2 OF 77
Dwg. No. ET-001

GENERAL NOTES:

1. ALL OCS MODIFICATIONS, HARDWARE, AND MATERIALS ARE TO BE IN ACCORDANCE WITH AMTRAK STANDARDS, UNLESS MODIFIED HEREIN.
2. SCREENED ITEMS DESIGNATE ITEMS TO BE REMOVED WHILE BOLD ITEMS DESIGNATE ITEMS TO BE INSTALLED.
3. WHEREVER A SPECIFIC MANUFACTURED ITEM IS LISTED ON THE DRAWINGS, ALTERNATIVE EQUIVALENTS MUST BE APPROVED BY AMTRAK.
4. THE VERTICAL DATUM IS BASED ON NAVD88 BASED ON SURVEY COLLECTED BY DAWOOD UNDER CONTRACT WITH HNTB, IN MAY 2012. HORIZONTAL DATUM IS PA STATE PLANE – NAD83 ZONE (CORS96) BASED ON CONTROL PROVIDED BY HNTB. EXISTING STRUCTURE ERECTION DIAGRAMS AND PROFILES WERE BASED ON LIDAR PROVIDED BY AMTRAK (RECEIVED IN AUGUST 2024). PROJECT UNITS ARE IN U.S. SURVEY FEET.

OVERHEAD CONTACT SYSTEM:

1. ALL HEIGHTS ARE MEASURED RELATIVE TO TOP OF INDIVIDUAL HIGH RAIL.
2. OCS PROFILES PROVIDED ARE CALCULATED AT 60°F WITH NO WIND, NO ICE.
3. JUMPER ASSEMBLY TO BE INSTALLED AT ALL LOCATIONS WHERE MESSENGER WIRES ARE 18" APART TO MAINTAIN CONTINUITY.
4. NEW OCS PROFILES SHALL NOT EXCEED THE MAXIMUM GRADIENT FOR THE TRACK SPEED IN ACCORDANCE WITH AREMA. ALL NEWLY PROFILED TRANSITION SPANS MUST HAVE GRADIENTS LIMITED TO 1/2 GRADIENT FOR THE TRACK SPEED.

STRUCTURES:

1. ALL STRUCTURAL FIELD CONNECTIONS SHALL BE BOLTED UNLESS OTHERWISE NOTED. FIELD WELDS ARE NOT PERMITTED UNLESS AUTHORIZED BY THE ENGINEER.
2. ALL WELDING SHALL CONFORM TO AWS D1.1. WELDING ELECTRODE SHALL BE SERIES E70XX. ALL WELDS SHALL BE 1/4" UNLESS OTHERWISE NOTED.
3. WITHOUT EXCEPTION, CONTRACTOR SHALL VERIFY ALL DIMENSIONS AND CONDITIONS IN THE FIELD BEFORE COMMENCING FABRICATION OF ANY STRUCTURAL STEEL OR ASSEMBLIES. IF FIELD CONDITIONS PROHIBIT THE USE OF DETAILS CONTAINED IN THE CONTRACT DRAWINGS, SUBMIT ALTERNATE DESIGN DETAILS FOR APPROVAL BY THE ENGINEER.
4. CONTRACTOR TO PROVIDE DESIGN AS NEEDED FOR ALL TEMPORARY CONDITIONS TO FACILITATE CONSTRUCTION.
5. ALL HORIZONTAL LOCATION DIMENSIONS, AND ALONG TRACK STATIONING SHALL BE REFERENCED TO THE PROPOSED ALIGNMENT AND GRADE OF THE NEAREST TRACK.
6. ALL REFERENCE DIMENSIONS RELATED TO TOP OF HIGH RAIL REQUIRE COORDINATION WITH PROGRAM MANAGER IN REGARDS TO FINAL RAIL ELEVATION. IN SOME LOCATIONS, THE TRACKS MAY BE RAISED OR LOWERED DUE TO REPROFILING OR TIE REPLACEMENT. IN ALL CASES, THE FINAL PROPOSED ELEVATION MUST BE CONSIDERED AND ADDRESSED WITH AMTRAK'S PROGRAM MANAGER PRIOR TO INSTALLATION.

STRUCTURAL STEEL NOTES:

1. STRUCTURAL STEEL SHALL CONFORM TO ASTM A992 GRADE 50 FOR ROLLED SHAPES. HSS AND PIPE SHALL CONFORM TO ASTM A500, GR. C. ALL OTHER STRUCTURAL STEEL SHALL CONFORM TO ASTM A36 UNLESS NOTED OTHERWISE.
2. ALL STRUCTURAL STEEL SHALL BE GALVANIZED, IN ACCORDANCE WITH ASTM A123 AND A153.
3. ALL BEAM SPLICES TO BE SHOP BOLTED WITH ONE SIDE ONLY, FOR EASE OF SHIPPING.
4. ALL STRUCTURAL CONNECTIONS SHALL CONSIST OF 7/8"ø ASTM F3125, GRADE A325, TYPE 1, HEAVY HEX BOLT WITH ASTM A563 GRADE DH HEAVY HEX NUT AND ASTM F436 WASHER UNLESS NOTED OTHERWISE.
5. ALL HOLES SHALL BE 15/16"ø UNLESS OTHERWISE NOTED.
6. ALL BOLTS, NUTS, AND WASHERS SHALL BE GALVANIZED PER ASTM A153.
7. STRUCTURAL MEMBERS AND CATENARY SUPPORT CLAMPS SHALL BE SHIPPED WITH ALL PARTS COMPLETELY ASSEMBLED AND MARKED WITH APPROPRIATE BEAM OR COLUMN SIZE.
8. ALL DIMENSIONS TO BE VERIFIED IN FIELD.
9. ALL GALVANIZED STEEL ITEMS CUT OR MODIFIED IN FIELD SHALL BE CLEANED WITH A WIRE BRUSH AND PAINTED WITH ONE BRUSH COAT OR TWO SPRAY COATS OF ZINC REPAIR MATERIAL IN THE AFFECTED AREAS.
10. STEEL DETAILING, FABRICATION AND ERECTION SHALL COMPLY WITH THE CURRENT AISC MANUAL AND AS MODIFIED BY AMTRAK CATENARY STRUCTURE DESIGN STANDARDS.
11. ALL WELDS AND WELDING TO CONFORM WITH THE APPLICABLE REQUIREMENTS OF AWS D1.1. OF THE AMERICAN WELDING SOCIETY. MINIMUM ELECTRODE SHALL BE E70XX.
12. STEEL FABRICATION SHOULD NOT BEGIN BEFORE FIELD VERIFICATION OF ALL AS–BUILT FOUNDATION LOCATIONS.
13. ALL BOLTS TO BE OF STANDARD GAUGE UNLESS NOTED OTHERWISE.
14. SHOP DRAWINGS TO BE SUBMITTED TO THE EOR AND AMTRAK PRIOR TO FABRICATION.

TRANSMISSION LINE:

1. ALL STRUCTURES ARE EXISTING UNLESS MARKED NEW OR INDICATED BY APPROPRIATE SYMBOLS.
2. PROPOSED WIRE HEIGHTS INDICATED IN THE PROFILE DRAWINGS AND ERECTION DIAGRAMS ARE MEASURED FROM THE TOP OF EACH TRACK'S HIGH RAIL AND ARE CALCULATED AT 60 DEGREES FAHRENHEIT WITH NO WIND OR ICE.
3. THE CONTRACTOR SHALL INSTALL ALL EQUIPMENT AND HARDWARE NECESSARY TO MEET THE TRANSMISSION CONSTRUCTION REQUIREMENTS. LONG–LEAD ITEMS SHALL BE PROCURED EARLY SO AS TO MEET THE PROJECT CONSTRUCTION SCHEDULE.
4. THE INSTALLATION OF THE TRANSMISSION SYSTEM SHALL BE IN ACCORDANCE WITH THE REQUIREMENTS OF THE SPECIFICATIONS AND ALL FEDERAL, STATE AND LOCAL CODES.
5. ALL COMPONENT SYSTEM HARDWARE SHALL BE INSTALLED IN ACCORDANCE WITH THE MANUFACTURER'S RECOMMENDED PROCEDURES.
6. THE TRANSMISSION SYSTEM COMPONENTS SHALL HAVE THE FOLLOWING MINIMUM FACTORS OF SAFETY FOR THE WORST CASE CLIMATIC CONDITION:
   CONDUCTORS – 2.00
   HARDWARE – 3.00 (60 MPH WIND, NO ICE) AND (40 MPH WIND, 1/2" ICE)
   – 2.00 (90 MPH WIND, NO ICE)
7. MATERIAL ALLOCATION SCHEDULES AS SHOWN INDICATE THE MAJOR COMPONENTS AND ASSEMBLIES OF THE TRANSMISSION LINE SYSTEM. THE INSTALLATION CONTRACTOR SHALL VERIFY THESE SCHEDULES AND PROVIDE ALL COMPONENTS AS REQUIRED TO PROVIDE A COMPLETE FUNCTIONAL SYSTEM. NOTIFY AMTRAK OF ANY QUANTITY DISCREPANCIES.
8. THE CONTRACTOR SHALL FIELD VERIFY AND LOCATE ALL OVERHEAD AND UNDERGROUND PUBLIC AND RAILROAD UTILITIES IN COORDINATION WITH UTILITY COMPANIES PRIOR TO COMMENCEMENT OF WORK. ANY DAMAGE TO THE EXISTING UTILITIES SHALL BE REPAIRED BY THE CONTRACTOR AT HIS OWN COST.
9. THE CONTRACTOR AND HIS SUBCONTRACTORS SHALL REVIEW THE CONTRACT DOCUMENTS PRIOR TO BID AND BEFORE EXECUTING THE CONTRACT AND CALL ANY NON–CONFORMING DRAWING OR DISCREPANCIES TO THE ATTENTION OF THE ENGINEER. FAILURE TO NOTIFY WILL NOT RELIEVE THE CONTRACTOR OF RESPONSIBILITIES TO PERFORM THE WORK AS INTENDED BY THE CONTRACT DOCUMENTS AT NO ADDITIONAL COST.
10. THE CONTRACTOR SHALL PROTECT, PRESERVE, INCORPORATE, TEMPORARILY RELOCATE, AND IF NECESSARY, SUPPORT ALL EXISTING UTILITIES AND ITEMS TO REMAIN. THE CONTRACTOR SHALL REPAIR AND REPLACE ANY ITEM DAMAGED DURING THE COURSE OF WORK AT NO ADDITIONAL COST.
11. THE CONTRACTOR SHALL EXERCISE AND BE RESPONSIBLE FOR RAILROAD SAFETY PRECAUTIONS WHEN WORKING IN HIGH VOLTAGE AREAS.
12. THE CONTRACTOR SHALL PROVIDE AND MAINTAIN SAFEGUARDS NECESSARY TO PROTECT PERSONS AND PROPERTY FROM INJURY OR DAMAGE DURING PERFORMANCE OF WORK. OSHA, STATE, FRA AND ALL MUNICIPAL CODES SHALL BE FOLLOWED, THE CONTRACTOR SHALL BE RESPONSIBLE FOR ALL LIABILITIES ARISING OUT OF ANY DAMAGES/INJURIES AT THE SITE.
13. REVIEWS, BY THE ENGINEER, OF SHOP DRAWINGS AND PROCEDURES FOR CONSTRUCTION AND TESTING SHALL NOT ABSOLVE THE CONTRACTOR FROM ANY LIABILITY RESULTING FROM HIS OPERATIONS. WHERE ANY DISCREPANCIES ARE DISCOVERED WITHIN THE CONTRACT DOCUMENTS, THE MORE STRINGENT REQUIREMENTS SHALL APPLY.

DRILLED CAISSONS NOTES:

1. CASINGS SHALL BE ASTM A252 WITH MINIMUM YIELD STRENGTH 35KSI, AND SHALL BE MARKED WITH THEIR IDENTIFYING STRUCTURE NUMBERS. MINIMUM COMPRESSIVE STRENGTH OF CONCRETE SHALL BE 4000PSI @ 28 DAYS.
2. REBAR CAGES SHALL BE FULLY ASSEMBLED AND SHIPPED WITHIN THEIR RESPECTIVE CASING.
3. REBAR CAGE ASSEMBLY SHALL CONSIST OF TACK WELDING #4 CIRCULAR TIES TO VERTICAL BARS AT THE FOUR QUADRANTS SHOWN PER THE CONTRACT DRAWINGS. THE REMAINDER OF THE ASSEMBLY SHALL BE TIE WIRED AT A MINIMUM OF TWO WRAPS PER CONNECTION. ALL BARS FOR THE CAGE ASSEMBLY SHALL BE ASTM A615 S1, GRADE 60.
4. FOUNDATION ANCHOR RODS SHALL BE SHIPPED ON A SEPARATE SKID FOR EACH FOUNDATION LOCATION, AND TAGGED WITH THE FOUNDATION MARK NUMBER.
5. FOUNDATION ANCHOR RODS SHALL BE SHIPPED WITH THREAD PROTECTORS.
6. FOUNDATION ANCHOR RODS SHALL BE FULLY GALVANIZED ALONG WITH ALL ASSOCIATED NUTS, WASHERS AND EMBEDMENT ASSEMBLIES.
7. FOUNDATION ANCHOR ROD EMBEDMENT PLATE SHALL BE FULLY GALVANIZED.
8. CONTRACTOR MAY PROVIDE (2) 3"ø HOLES ON OPPOSITE FACES OF CASING TO ACCEPT RIGGING FOR PLACEMENT. CENTERLINE OF HOLES SHALL BE 5" FROM EDGE OF CASING.
9. EXPLORATORY TRENCHES ARE TO BE HAND DUG IN ACCORDANCE WITH THE APPROVED CONSTRUCTION DRAWINGS TO DETERMINE THE PRESENCE OF ANY UNDERGROUND INSTALLATION BEFORE PROCEEDING. THESE TRENCHES ARE TO BE BACKFILLED AND IMMEDIATELY COMPACTED.
10. TEMPORARY SHEETING AND SHORING:
    10.1. LOCATE 3' DEEP x 15" WIDE EXPLORATORY TRENCHES PER THE CONSTRUCTION DRAWINGS. THE EXTENT OF EACH TRENCH SHALL BE IN THE FORM OF AN "H" WHOSE OUTSIDE DIMENSIONS MATCH THE EXTENT OF THE OUTSIDE FACE OF THE SHEETING DIMENSIONS.
    10.2. WHEN SUPPORT OF TRACK OR TRACKS IS NECESSARY DURING CONSTRUCTION OF FOUNDATION, INTERLOCKING STEEL SHEETING ADEQUATELY BRACED AND DESIGNED TO CARRY E–80 LIVE LOAD PLUS 50% IMPACT IS REQUIRED. SOLDIER PILES AND LAGGING WILL BE PERMITTED FOR SUPPORTING ADJACENT TRACK OR TRACKS ONLY WHEN REQUIRED PENETRATION OF STEEL SHEET PILING CAN NOT BE OBTAINED OR WHEN IN THE OPINION OF THE ENGINEER, STEEL SHEET PILING WOULD BE IMPRACTICABLE TO PLACE.
    10.3. ABSOLUTE USE OF TRACK IS REQUIRED WHILE DRIVING SHEETING ADJACENT TO IN SERVICE TRACK.
    10.4. CAVITIES CREATED BY DRIVING OF SHEET PILING SHALL BE FILLED WITH SAND AND ANY DISTURBED BALLAST SHALL BE RESTORED AND TAMPED IMMEDIATELY.
    10.5. SHEET PILING SHALL BE CUT OFF AT TOP OF TIE DURING CONSTRUCTION AND THEN, AFTER CONSTRUCTION, SHALL BE CUT OFF 24" BELOW EXISTING GROUND LINE OR GRADE AND LEFT IN PLACE.
    10.6. IF TEMPORARY SHEETING AND SHORING IS REQUIRED IT SHALL BE IN ACCORDANCE WITH AMTRAK'S "REQUIREMENTS FOR TEMPORARY SHEETING AND SHORING TO SUPPORT AMTRAK TRACKS."
11. DRILLED SHAFTS SHALL BE LOCATED WITHIN A RADIUS OF 1 1/2" OF THE REQUIRED ALIGNMENT AND WITHIN A SLOPE OF 1/8" PER FOOT OUT OF PLUMB.
12. EXCAVATION AND BACKFILL:
    12.1. ALL EXCAVATION SHALL CONFORM TO THE LINES, GRADE, SECTIONS AND ELEVATIONS SHOWN ON THE DRAWINGS.
    12.2. THE EXCAVATION SHALL BE COVERED AND RAMPED EACH NIGHT WITH BARRICADES AND WARNING LIGHTS PROVIDED.
13. DRILLED SHAFTS SHALL BE EXCAVATED TO THE DEPTH SHOWN ON THE DRAWING.
14. REMOVE ALL LOOSE MATERIAL AND DEWATER EXCAVATION AS REQUIRED FOR INSPECTION PRIOR TO CONCRETING.

PROTECTION OF EXISTING STRUCTURES:

1. EXISTING STRUCTURES, UTILITY LINES AND UNDERGROUND UTILITIES, WHERE KNOWN, ARE INDICATED ON THE DRAWINGS AS COMPLETELY AS THE AVAILABLE INFORMATION ALLOWS. IN THE EVENT THAT ANY UNMARKED OR UNKNOWN STRUCTURE/UTILITY ARE UNCOVERED, THE CONTRACTOR SHALL REPORT ITS FINDINGS TO THE OWNER'S SITE REPRESENTATIVE FOR INSTRUCTIONS BEFORE PROCEEDING FURTHER.
2. CONTRACTOR SHALL BE RESPONSIBLE FOR TEMPORARY STABILITY OF ALL SLOPES, ADJACENT TRACK AND EXISTING STRUCTURES DURING CONSTRUCTION.
3. THE EXISTING STRUCTURES AND UTILITIES WHICH ARE ADJACENT TO THE SITE AND THOSE TO REMAIN WITHIN THE LIMIT OF THE WORK SHALL BE PROTECTED AGAINST DAMAGE. THE CONTRACTOR SHALL BE FULLY RESPONSIBLE IN THE EVENT OF REMOVAL OF OR DAMAGE TO ANY EXISTING OBJECTS BY CONTRACTORS PERSONNEL, WHICH ARE INTENDED BY THE OWNER TO REMAIN IN PLACE AT THE TIME OF THE CONSTRUCTION OF THE OCS FOUNDATIONS.
4. FOR ANY EARTH DISTURBING CONSTRUCTION ACTIVITY, EITHER UNDERNEATH OR WITHIN 50 FEET OF A TRACK, THAT EFFECTS THE THEORETICAL EMBANKMENT LINE, PERFORM TRACK MONITORING IN ACCORDANCE WITH AMTRAK EP 2031.

CONSTRUCTION STAGING:

1. SEE THE PROJECT SPECIFICATIONS FOR ELECTRICAL OUTAGES DURING CONSTRUCTION.
2. THE CONSTRUCTION CONTRACTOR SHALL ACCOMPLISH ALL NECESSARY COORDINATION WITH OTHER RELATED CONSTRUCTION PHASES AND CONTRACTORS FOR THIS PROJECT INCLUDING AMTRAK FORCE ACCOUNT PERSONNEL.
3. BEFORE ANY WORK IS COMMENCED, COORDINATE WITH AMTRAK REGARDING REQUIREMENTS OF TRACK AND/OR POWER OUTAGES FOLLOWING ALL STANDARD PROCEDURES AND SAFETY RULES.
4. THE EXISTING AERIAL CONDUCTORS, INCLUDING BUT NOT LIMITED TO TRANSMISSION LINES, CATENARY WIRING, AND ASSOCIATED SUPPORTS SHALL BE TREATED AS LIVE. NO WORK SHALL BE PERFORMED UNTIL A SITE SPECIFIC WORK PLAN (SSWP) IS APPROVED BY AMTRAK.
5. DURING THE CONSTRUCTION STAGING PROVIDE REQUISITE WARNING SIGNS INDICATING WIRED AND LIVE SECTIONS AS WELL AS DE–ENERGIZED OR GROUNDED SECTIONS.
6. BEFORE ANY TRANSMISSION SECTION IS ENERGIZED ENSURE THAT ALL GROUNDED CONNECTIONS TO THE POWER SYSTEM ARE REMOVED AND ALL AMTRAK SAFETY AND ENERGIZATION PROCEDURES ARE FOLLOWED.
7. THE CONTRACTOR SHALL COORDINATE WITH AMTRAK FOR SPECIFIC PROCEDURES REGARDING TEMPORARY INSULATION, SUPPORT, DEAD–ENDING, ETC. AS MAY BE NECESSARY TO MAINTAIN ELECTRICAL SERVICE.
8. ALL UNDERGROUND UTILITIES, CABLE, AND FACILITIES MUST BE LOCATED AND PROTECTED BEFORE ANY EXCAVATING, DRILLING, BORING/DIRECTIONAL BORING, GROUND PENETRATING ACTIVITIES, OR CONSTRUCTION TAKES PLACE. THIS INCLUDES RAILROAD AND COMMERCIAL UTILITIES, CABLES, DUCT LINES, AND FACILITIES. THESE ACTIVITIES WILL NOT BE PERFORMED IN CLOSE PROXIMITY TO THE RAILROAD DUCT LINES UNLESS MONITORED BY ON–SITE AMTRAK COMMUNICATIONS AND SIGNAL (C&S) DEPARTMENT PERSONNEL. CONTACT AMTRAK ENGINEERING AND "811 ONE–CALL" PROCESS INDIVIDUALLY PRIOR TO ANY GROUND PENETRATING ACTIVITIES TO ENSURE ALL NECESSARY PRECAUTIONS ARE TAKEN TO PREVENT INTERRUPTION TO RAILROAD OPERATION.
9. THE CONTRACTOR SHALL COORDINATE FIBER OPTIC WORK WITH ZAYO INCLUDING BUT NOT LIMITED TO SEQUENCING OF OPERATIONS AND SCHEDULING OF WORK. AMTRAK SHALL PROVIDE NECESSARY SUPPORT TO FACILITATE THE WORK AS REQUIRED.
10. CONTRACTOR MUST CONFORM TO AMTRAK ENGINEERING PRACTICE EP3014 "MAINTENANCE AND PROTECTION OF RAILROAD TRAFFIC DURING CONTRACTOR OPERATIONS".

ET DIVISION OF WORK AND MATERIAL SUPPLY*

ITEM	DESCRIPTION	MATERIAL	FABRICATION AND DELIVERY	ERECTION	LABOR
1	EXPLORATORY TRENCHING FOR OCS FOUNDATIONS	–	–	–	C
2	INSTALLATION OF OCS STRUCTURE FOUNDATIONS	C	C*	C	C
3	DE–ENERGIZATION/ RE–ENERGIZATION/ INSTALLATION OF TEMPORARY GROUNDS	R	R	R	R
4	INSTALL NEW OCS STRUCTURES AND STEELWORK	C	C*	R	R
5	INSTALL NEW GROUND WIRE TO NEW OCS STRUCTURES	R	R	R	R
6	MODIFY EXISTING OCS STRUCTURES (REMOVE TOP OF COLUMNS)	R	R	R	R
7	RE–PROFILE OCS CONDUCTORS AND TRANSFER ONTO NEW STRUCTURES	R	R	R	R
8	REMOVE EXISTING STRUCTURE P–1661A, P–1662, P–1663, AND P–1664	R	R	R	R
9	INSTALL TRANSMISSION, SIGNAL, AND STATIC WIRES	R	R	R	R
10	INSTALL AND SPLICE IN NEW FIBER OPTIC WIRE	Z	Z	Z	Z

R = FORCE ACCOUNT
Z = ZAYO
C = CONTRACTOR HIRED BY PENNDOT
* = SHOP FABRICATION TO BE PROCURED BY PENNDOT

ABBREVIATIONS

A	AMPERE
AC	ALTERNATING CURRENT
ACI	AMERICAN CONCRETE INSTITUTE
ACSR	ALUMINUM CABLE STEEL REINFORCED
ADJ.	ADJUSTMENT
ADSS	ALL–DIELECTRIC SELF–SUPPORTING CABLE
AISC	AMERICAN INSTITUTE OF STEEL CONSTRUCTION
AL	ALUMINUM
ALT	ALTERNATE
AMMS	AMTRAK MASTER MATERIAL SPECIFICATION
ANSI	AMERICAN NATIONAL STANDARDS INSTITUTE
A/R	AS REQUIRED
APPROX	APPROXIMATELY
ASSY	ASSEMBLY
ASTM	AMERICAN SOCIETY FOR TESTING AND MATERIALS
ATT	ATTACHMENT
AUX.	AUXILIARY
AVE.	AVENUE
AWG	AMERICAN WIRE GAUGE
AWS	AMERICAN WELDING SOCIETY
B.C.	BOLT CIRCLE
BOS	BOTTOM OF STEEL
BRKT	BRACKET
BTM	BOTTOM
°C	DEGREES CELSIUS
CAT	CATENARY
℄	CENTERLINE
C&S	COMMUNICATIONS AND SIGNALS
CL	CENTERLINE
CIP	CAST–IN–PLACE
CLR	CLEAR
CKT	CIRCUIT
COL	COLUMN
CONC	CONCRETE
COND	CONDUCTOR
CONT.	CONTINUED
CU	COPPER
CW	CONTACT WIRE
DE	DEAD END
DEMO	DEMOLISH/DEMOLITION
DET	DETAIL
DGA	DOWN GUY ANCHOR
DIA	DIAMETER
DISC	DISCONNECT
DWG	DRAWING
EA	EACH
ELEC	ELECTRIC, ELECTRICAL
EL.	ELEVATION
EQUIP	EQUIPMENT
ET	ELECTRIC TRACTION
EXIST	EXISTING
°F	DEGREES FAHRENHEIT
FTG	FOOTING
FDN	FOUNDATION
FDR	FEEDER WIRE
FLEX	FLEXIBLE
F/S	FACE OF STEEL
F.S.	FAR SIDE
FOS	FACTOR OF SAFETY
FT.	FEET
GALV	GALVANIZED
GND	GROUND
GRS	GALVANIZED RIGID STEEL
GW	GROUND WIRE
HD	HARD DRAWN
HH	HEAVY HEX
H.O.	HAND–OPERATED
HORZ	HORIZONTAL
HRL	HIGH RAIL LEVEL
HT	HEIGHT
H.S.	HIGH–STRENGTH
HVY	HEAVY
HZ	HERTZ
I.D.	INSIDE DIAMETER
IHRL	INDIVIDUAL HIGH RAIL LEVEL
IN.	INCHES
INCL	INCLUDING, INCLUSIVE
INS	INSULATOR
IR	IN–RUNNING

ABBREVIATIONS (CONT.)

K	THOUSAND
KCMIL	THOUSAND CIRCULAR MILS
K–FT	KIP–FEET
KV	THOUSAND VOLTS
L	LENGTH
LA	LIGHTNING ARRESTER
LB	POUND
LG.	LONG
LOCN	LOCATION
M	METERS
M.O.	MOTOR–OPERATED
M.O.D.	MOTOR–OPERATED DISCONNECT
MOD	MODIFIED
MAX	MAXIMUM
MIN	MINIMUM
MISC	MISCELLANEOUS
M.P.	MILEPOST
MPH	MILES PER HOUR
MS	MID SPAN
MTG	MOUNTING
N/A	NOT APPLICABLE
NESC	NATIONAL ELECTRIC SAFETY CODE
NEMA	NATIONAL ELECTRICAL MANUFACTURER'S ASSOCIATION
N.C.	NORMALLY CLOSED
N.I.C.	NOT–IN–CONTRACT
NO.	NUMBER
N.O.	NORMALLY OPEN
N.S.	NEAR SIDE
N.T.S.	NOT TO SCALE
OC	ON CENTER
OCS	OVERHEAD CONTACT SYSTEM
OD	OUTSIDE DIAMETER
O.H.	OVERHEAD
OOR	OUT–OF–RUNNING
ℙ	PLATE
PLCS	PLACES
P.O.	PULL OFF
PROP	PROPOSED
PSI	POUNDS PER SQUARE INCH
QTY	QUANTITY
R	RADIUS
RD	ROAD
REF	REFERENCE
REINF	REINFORCED
REQ'D	REQUIRED
ROW	RIGHT–OF–WAY
RR	RAILROAD
RS	RULING SPAN
SECT	SECTION
SI	SECTION INSULATOR
SIG	SIGNAL
SIL.	SILVER
S.P.	SIGNAL POWER
SQ	SQUARE
S/S	STAINLESS STEEL
ST	STREET
STA	STATIONING
STD	STANDARD
STR	STRUCTURE
SWA	STATIC WIRE ANCHOR
SYMM	SYMMETRY
TB	TURNBUCKLE
TBR	TO BE REMOVED
TEMP*	TEMPERATURE
TEMP	TEMPORARY
TERM	TERMINATION
THD	THREAD
THK	THICK
T/O	TURNOUT
T.O.C.	TOP OF CONCRETE
T.O.G.	TOP OF GRATING
T/R	TOP OF RAIL
TOS	TOP OF STEEL
TP&S	TRACTION POWER & SIGNAL
TRK.	TRACK
TX	TRANSMISSION
TYP	TYPICAL
U.G.	UNDER GRADE
UNC	UNIFIED COARSE THREAD SERIES
U.N.O.	UNLESS NOTED OTHERWISE

ABBREVIATIONS (CONT.)

V	VOLT
VERT	VERTICAL
	WITH
WF	WIDE FLANGE
WT	WEIGHT
X/O	CROSSOVER
XS	EXTRA STRONG
ø	DIAMETER
&	AND
±	PLUS OR MINUS
∠	ANGLE
@	AT

LEGEND

X–XXX STA. XXX+XX	EXISTING CROSS CATENARY STRUCTURE
X–XXX STA. XXX+XX	EXISTING PORTAL STRUCTURE
X–XXX STA. XXX+XX	PROPOSED PORTAL STRUCTURE
SW #XXX	DISCONNECT SWITCH (MOTOR–OPERATED) NORMALLY CLOSED
CAT #XX (NEW) / JUMPER / CAT #XX (NEW)	NEW CONTINUITY JUMPER
<###>	SPAN
CAT #XX	EXISTING CATENARY IN–RUNNING
CAT #XX (NEW)	NEW CATENARY IN–RUNNING
	CATENARY SPLICE
	EXISTING TRANSMISSION LINE
	EXISTING STATIC WIRE
	EXISTING SIGNAL POWER WIRE
	EXISTING RIGHT–OF–WAY
	EXISTING GROUND WIRE
	EXISTING FIBER OPTIC WIRE
	PROPOSED TRANSMISSION LINE
	PROPOSED STATIC WIRE
	PROPOSED SIGNAL POWER WIRE
	PROPOSED RIGHT–OF–WAY
	PROPOSED GROUND WIRE
	PROPOSED FIBER OPTIC WIRE
	TRACK

No.	Revisions	Date	By

AMTRAK

Office of Engineering
Engineering Design
National Railroad Passenger Corporation
30th Street Station, Philadelphia, Pennsylvania 19104

Approved	Date

COMMONWEALTH OF PENNSYLVANIA REGISTERED PROFESSIONAL ENGINEER MATTHEW JOHN SCHREFFLER PE096326

HNTB
HNTB Corporation
1650 Arch Street, Suite 1700
Philadelphia, PA 19103
215–568–6500

KEYSTONE CORRIDOR
I–83 RECONSTRUCTION EARLY ACTION
ELECTRIC TRACTION

LEGEND AND ABBREVIATIONS

Designed PJC | Drawn PJC | Checked MJS | Date 06/13/2025

Job No. 43377
File Name 43377–S–ET–ABV01
Sheet No. 4 OF 77
Dwg. No. ET–003

PLOT SCALE: AS SHOWN
6/10/2025 2:35:56 PM
43377–s–et–abv01.dwg

NOTES:

1. SEE DRAWINGS ET–002 AND ET–003 FOR OCS GENERAL NOTES AND ABBREVIATIONS.

CONDUCTOR PARTICULAR	MESSENGER WIRE	AUXILIARY WIRE	CONTACT WIRE	TRANSMISSION	SIGNAL POWER	STATIC/GROUND (EXISTING)	STATIC/GROUND (EXISTING)	STATIC/GROUND (PROPOSED)	FIBER OPTIC	CROSS CATENARY & BODY SPAN	STEADY SPAN
SIZE	5/8" DIA.	4/0 AWG	4/0 AWG	477 MCM	1/0 AWG	5/8"	4/0 AWG	9/16" DIA.	0.580"	9/16" DIA.	7/16" DIA.
MATERIAL	COPPER/COPPER–CLAD STEEL (CWC)	H.D. COPPER	BRONZE–T55	ALUMINUM/STEEL	H.D. COPPER	BRONZE (55)	H.D. COPPER	COPPER–CLAD STEEL (CW)	ACS/FIBER	COPPER–CLAD STEEL (CW)	COPPER–CLAD STEEL (CW)
CONSTRUCTION	12–H.D. COPPER 7–COPPER–CLAD STEEL	SOLID	SOLID	26 AL STRANDS / 7 STEEL STRANDS	7–STRAND	19 WIRE STRAND	7–STRAND	19–STRAND (#9)	ACS, AL TUBE	19–STRAND (#9)	7–STRAND
TYPE	4/0 TYPE "E"	GROOVED STANDARD SECTION	GROOVED STANARD SECTION	ACSR HAWK	–	–	–	GRADE 40 HS	AC–86/580 24 FIBER	GRADE 40 HS	GRADE 40 HS
OVERALL DIAMETER (IN)	0.613	0.482	0.482	0.858	0.368	0.613	0.522	0.572	0.5800	0.572	0.433
CROSS SECTIONAL AREA (IN^2)	0.2239	0.1665	0.1665	0.4354	0.0829	0.233	0.1662	0.1954	0.1850	0.1954	0.1145
ASTM	B 229	B 47	B 9	B 232	B 8 CLASS A	–	B 8 CLASS A	B 228	–	B 228	B 228
INSULATION	–	–	–	–	–	NONE	–	–	NONE	–	–
WEIGHT WITHOUT ICE (LB/FT)	0.848	0.642	0.642	0.656	0.326	0.916	0.653	0.700	0.458	0.700	0.408
BREAKING LOAD (LB)	20,730	7,760	11,490	19,500	4,750	18,260	9,154	23,390	24,351	23,390	12,670
MODULUS OF ELASTICITY (LB/IN^2)	$19.5x10^6$	$17.5x10^6$	$18.14x10^6$	$10.8x10^6$	$16x10^6$	$18.14x10^6$	$16x10^6$	$23x10^6$	$18.697x10^6$	$23x10^6$	$23x10^6$
THERMAL COEFFICIENT (°F)	$8.4x10^{-6}$	$9.4x10^{-6}$	$9.3x10^{-6}$	$10.5x10^{-6}$	$9.4x10^{-6}$	$9.3x10^{-6}$	$9.4x10^{-6}$	$7.2x10^{-6}$	$7.8x10^{-6}$	$7.2x10^{-6}$	$7.2x10^{-6}$
JACKET	–	–	–	–	–	–	–	–	–	–	–
REMARKS	–	–	–	–	–	–	–	–	OWNED AND MAINTAINED BY ZAYO	–	–
REFERENCE	–	–	–	–	–	–	–	–	–	–	–
SUPPLIER	–	–	–	–	–	–	–	–	–	–	–
SUPPLIER'S REFERENCE	–	–	–	–	–	–	–	–	–	–	–
TYPICAL SECTION	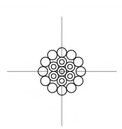	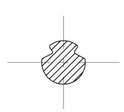	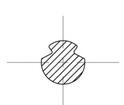			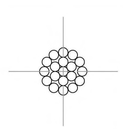			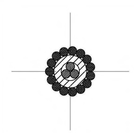		

PLOT SCALE: AS SHOWN
3/5/2025 4:11:01 PM
43377–s–et–cp01.dwg

No.	Revisions	Date	By

AMTRAK

Office of Engineering
Engineering Design
National Railroad Passenger Corporation
30th Street Station, Philadelphia, Pennsylvania 19104

Approved	Date

COMMONWEALTH OF PENNSYLVANIA
REGISTERED PROFESSIONAL
MATTHEW JOHN SCHREFFLER
ENGINEER
PE096326

HNTB
HNTB Corporation
1650 Arch Street, Suite 1700
Philadelphia, PA 19103
215–568–6500

KEYSTONE CORRIDOR
I–83 RECONSTRUCTION EARLY ACTION
ELECTRIC TRACTION
CONDUCTOR PARTICULARS

Designed	PJC	Drawn	PJC	Checked	MJS	Date	06/13/2025

Job No.	43377
File Name	43377–S–ET–CP01
Sheet No.	5 OF 77
Dwg. No.	ET–004

NOTES:

1. SEE DRAWINGS ET–002 AND ET–003 FOR OCS GENERAL NOTES AND ABBREVIATIONS.

TENSION INSTALLATION TABLE				
	RS=235 FT	RS=235 FT	RS=235 FT	RS=235 FT
TEMP °F	CONTACT WIRE TENSION (LBS)	AUXILIARY WIRE TENSION (LBS)	LOADED MW TENSION (LBS)	UNLOADED MW TENSION (LBS)
0	5063	1788	5947	4863
5	4929	1721	5824	4701
10	4795	1657	5703	4541
15	4662	1597	5584	4383
20	4529	1541	5468	4228
25	4397	1488	5355	4075
30	4266	1438	5245	3926
35	4136	1392	5137	3780
40	4006	1348	5032	3637
45	3878	1308	4930	3498
50	3751	1270	4831	3363
55	3625	1234	4734	3232
60	3500	1200	4640	3106
65	3377	1168	4549	2985
70	3256	1139	4461	2868
75	3136	1111	4375	2757
80	3019	1084	4292	2651
85	2904	1059	4212	2551
90	2791	1036	4134	2455
95	2681	1013	4058	2365
100	2575	992	3985	2280
105	2471	972	3915	2200
110	2371	953	3846	2125
115	2275	935	3780	2054
120	2182	918	3716	1987

TENSION INSTALLATION TABLE				
	RS=280 FT	RS=280 FT	RS=280 FT	RS=280 FT
TEMP °F	9/16" STATIC WIRE TENSION (LBS)	TRANSMISSION WIRE TENSION (LBS)	SIGNAL WIRE TENSION (LBS)	FIBER OPTIC TENSION (LBS)
0	2159	2479	1049	1489
5	2095	2352	1015	1435
10	2033	2234	983	1385
15	1975	2126	952	1338
20	1920	2026	922	1295
25	1868	1935	895	1254
30	1819	1851	868	1215
35	1773	1775	843	1179
40	1729	1704	819	1146
45	1687	1640	796	1114
50	1648	1581	775	1085
55	1610	1526	754	1057
60	1575	1476	735	1031
65	1541	1430	717	1006
70	1509	1387	699	983
75	1479	1347	683	961
80	1450	1309	667	941
85	1422	1275	652	921
90	1396	1242	638	902
95	1371	1212	625	885
100	1347	1184	612	868
105	1324	1157	600	852
110	1302	1132	589	837
115	1281	1108	578	822
120	1261	1086	567	808

PLOT SCALE: AS SHOWN
3/5/2025 4:11:01 PM 43377-s-et-cp01.dwg

No.	Revisions	Date	By

AMTRAK

Office of Engineering
Engineering Design
National Railroad Passenger Corporation
30th Street Station, Philadelphia, Pennsylvania 19104

Approved	Date

COMMONWEALTH OF PENNSYLVANIA
REGISTERED PROFESSIONAL
MATTHEW JOHN SCHREFFLER
ENGINEER
PE096326

HNTB
HNTB Corporation
1650 Arch Street, Suite 1700
Philadelphia, PA 19103
215–568–6500

KEYSTONE CORRIDOR
I–83 RECONSTRUCTION EARLY ACTION
ELECTRIC TRACTION
TENSION INSTALLATION CHART

Designed PJC | Drawn PJC | Checked MJS | Date 06/13/2025

Job No.	43377
File Name	43377–S–ET–CP01
Sheet No.	6 OF 77
Dwg. No.	ET–005

NOTES:

1. SEE DRAWINGS ET–002 AND ET–003 FOR OCS GENERAL NOTES AND ABBREVIATIONS.
2. THERE ARE NO PROPOSED SECTIONALIZING MODIFICATIONS INVOLVED WITH THIS PROJECT.

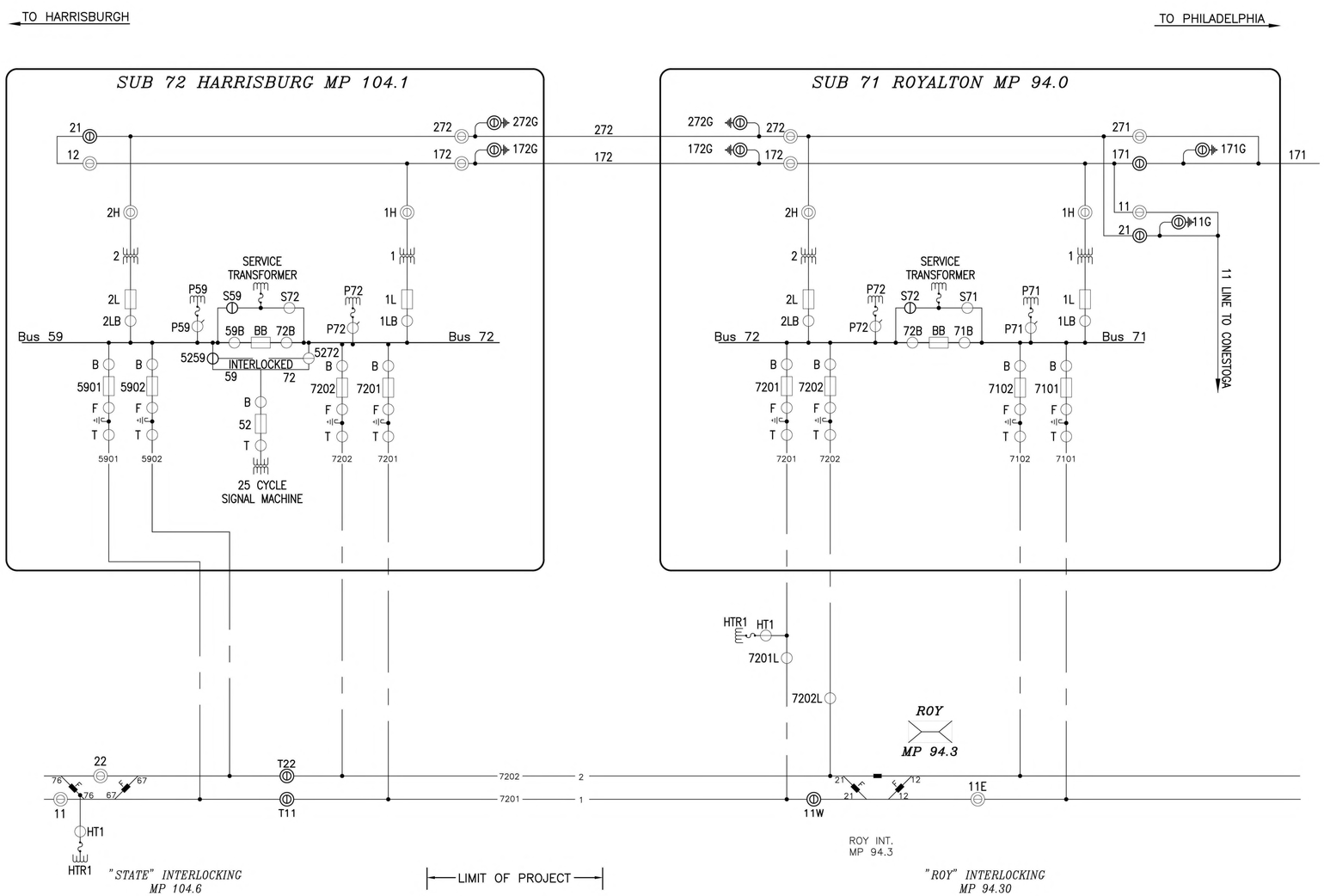

SWITCH	POLE
11	P1673
HT1	P1672
22	P1675
T11	P1668A
T22	P1668A

SWITCH	POLE
HT1	P1486
7201L	P1486
11W	P1486
7202L	P1482
11E	P1478

LEGEND

- 138KV TRANSMISSION AIR BREAK SWITCH WITH INTERLOCKED GROUND SWITCH
- AIR, OIL OR VACUUM CIRCUIT BREAKER NORMALLY CLOSED
- AIR, OIL OR VACUUM CIRCUIT BREAKER NORMALLY OPEN
- MOTOR OPERATED SWITCH NORMALLY CLOSED
- MOTOR OPERATED SWITCH NORMALLY OPEN
- MOTOR OPERATED GROUNDING SWITCH 3 POSITION NORMALLY CLOSED
- HAND OPERATED GROUNDING SWITCH NORMALLY CLOSED
- HAND OPERATED SWITCH NORMALLY CLOSED
- HAND OPERATED SWITCH NORMALLY OPEN
- SWITCH POLE OPERATED SWITCH NORMALLY CLOSED
- SWITCH POLE OPERATED SWITCH NORMALLY OPEN
- FUSED DISCONNECT SWITCH NORMALLY CLOSED
- FUSED DISCONNECT SWITCH NORMALLY OPEN
- 3 POSITION SWITCH NEUTRAL/OPEN POSITION
- SELECTOR SWITCH FOR RELAYS
- GROUNDS
- TRANSFORMER
- HEATER STATION
- POTENTIAL TRANSFORMER
- NEUTRAL RESISTOR
- NEUTRAL GROUND RESISTOR
- GENERATOR
- CATENARY SECTION BREAK
- KUPLER – SECTION BREAK
- MELAMINE – SECTION BREAK
- FLURRY – SECTION BREAK
- CONVERTER
- VACUUM SWITCH
- AC MOTOR STOP SIGN
- CAPACITOR
- INDUCTOR
- DRAWOUT CIRCUIT BREAKER
- RESISTOR
- WATER WHEEL
- 25HZ GENERATOR SET
- 60HZ FILTER
- LIGHTNING ARRESTOR
- SECTION INSULATORS
- WIRE DEAD END
- POT HEAD
- FUSE
- PHASE BREAK SIGN
- CURRENT TRANSFORMER
- SPARK GAP
- NON ELECTRIFIED TRACK
- WIRE NO TRACK
- FEEDER
- 12KV CONCENTRIC FEEDER CABLE

No.	Revisions	Date	By

AMTRAK

Office of Engineering
Engineering Design
National Railroad Passenger Corporation
30th Street Station, Philadelphia, Pennsylvania 19104

Approved	Date

COMMONWEALTH OF PENNSYLVANIA REGISTERED PROFESSIONAL ENGINEER MATTHEW JOHN SCHREFFLER PE096326

HNTB
HNTB Corporation
1650 Arch Street, Suite 1700
Philadelphia, PA 19103
215–568–6500

KEYSTONE CORRIDOR
I–83 RECONSTRUCTION EARLY ACTION
ELECTRIC TRACTION

SECTIONALIZING PLANS

Designed PJC | Drawn PJC | Checked MJS | Date 06/13/2025

Job No.	43377
File Name	43377–S–ET–SP01
Sheet No.	7 OF 77
Dwg. No.	ET–006

PLOT SCALE: AS SHOWN
1/24/2024 3:21:03 PM
43377–s–et–sp01.dwg

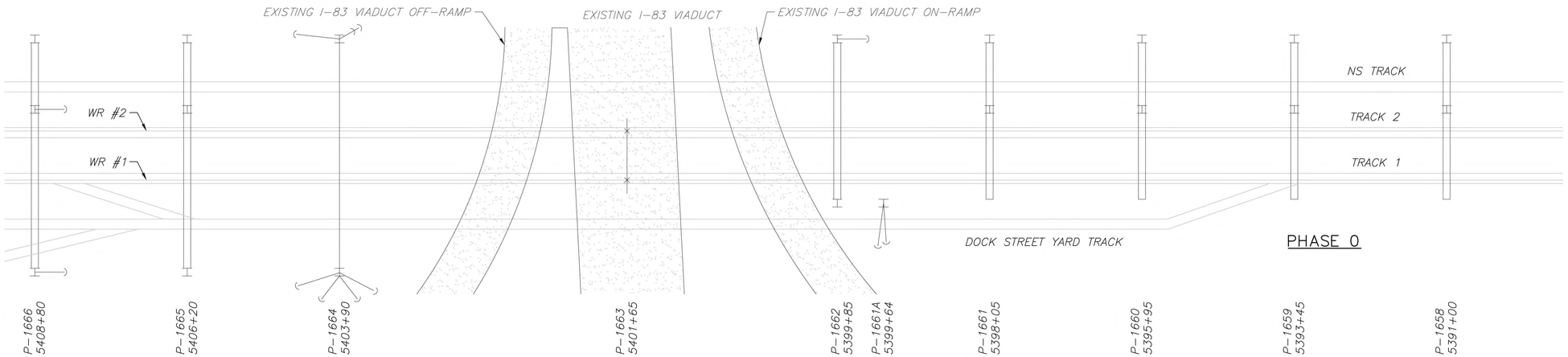

PHASE 0: EXISTING OCS

1. ORDER LONG LEAD ITEMS.

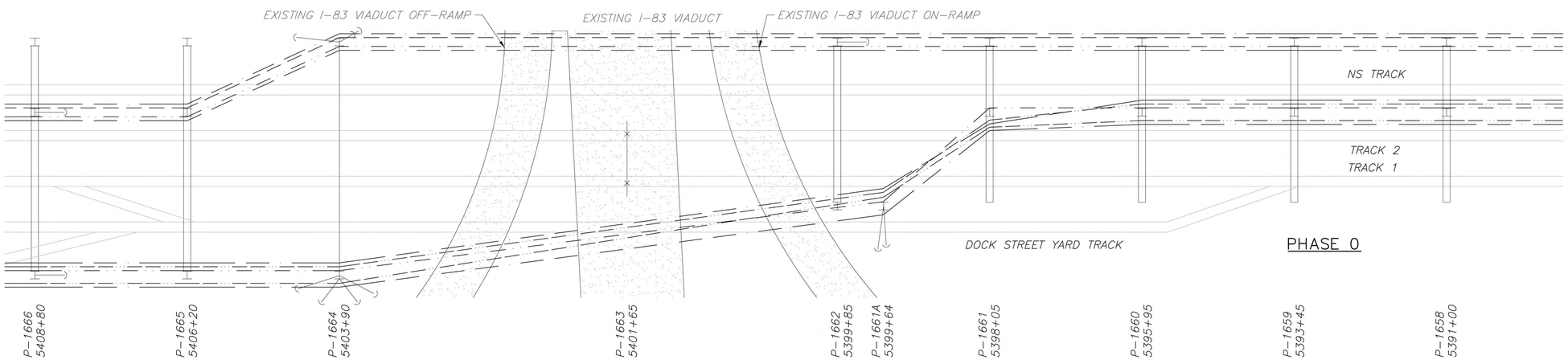

PHASE 0: EXISTING ANCILLARY

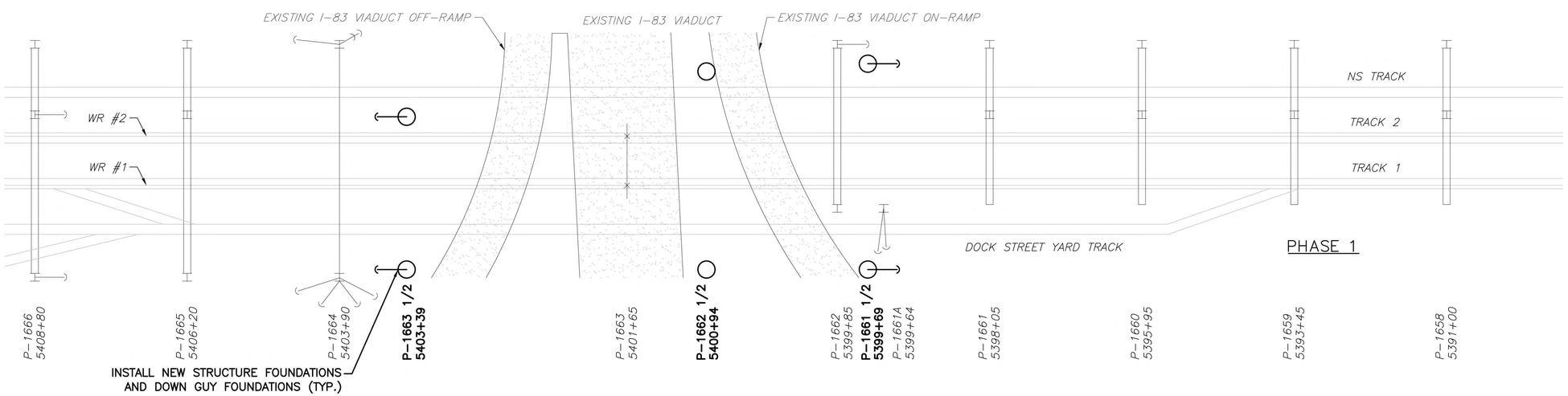

PHASE 1: OCS FOUNDATION WORK FOR I-83 VIADUCT REPLACEMENT

STAGE 1:

1. INSTALL FOUNDATIONS FOR NEW OCS STRUCTURES.
2. INSTALL (2) NEW DOWN GUY FOUNDATIONS FOR STRUCTURE P-1661 1/2 AND (2) NEW DOWN GUY FOUNDATIONS FOR STRUCTURE P-1663 1/2.

NOTES:

1. REFER TO STRUCTURAL DRAWINGS FOR COMPLETE PROJECT CONSTRUCTION PHASING AND STAGING.

No.	Revisions	Date	By

AMTRAK

Office of Engineering
Engineering Design
National Railroad Passenger Corporation
30th Street Station, Philadelphia, Pennsylvania 19104

Approved	Date

COMMONWEALTH OF PENNSYLVANIA REGISTERED PROFESSIONAL ENGINEER MATTHEW JOHN SCHREFFLER PE096328

HNTB
HNTB Corporation
1650 Arch Street, Suite 1700
Philadelphia, PA 19103
215-568-6500

KEYSTONE CORRIDOR
I-83 RECONSTRUCTION EARLY ACTION
ELECTRIC TRACTION

CONSTRUCTION STAGING (1 OF 3)

Designed	PJC	Drawn	PJC	Checked	MJS	Date	06/13/2025

Job No.	43377
File Name	43377-S-ET-STG01
Sheet No.	8 OF 77
Dwg. No.	ET-010

PLOT SCALE: AS SHOWN
6/5/2025 11:22:56 AM
43377-s-et-stg01.dwg

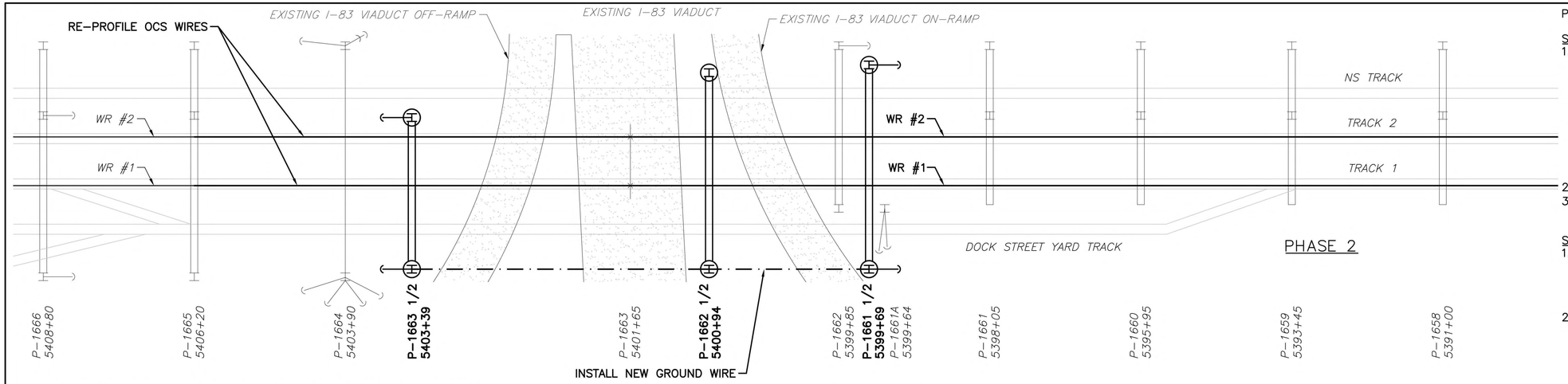

PHASE 2

PHASE 2: OCS WORK FOR I-83 VIADUCT REPLACEMENT

STAGE 1:

1. INSTALL NEW COLUMNS AS FOLLOWS
   - 1.1. P-1663 1/2: INSTALL NEW NORTH COLUMNS COMPLETELY. INSTALL (2) NEW SECTIONS OF SOUTH COLUMN ONLY BELOW SECOND SPLICE POINT (75'-0" ABOVE HRL.)
   - 1.2. P-1662 1/2: INSTALL BOTH NORTH AND SOUTH COLUMNS COMPLETELY.
   - 1.3. P-1661 1/2: INSTALL NEW SOUTH COLUMN COMPLETELY. INSTALL NEW SECTION OF NORTH COLUMN ONLY BELOW FIRST SPLICE POINT (56'-6" ABOVE HRL.)
2. INSTALL GROUND WIRE AS SHOWN.
3. DURING NIGHT OUTAGE OF OCS POWER, INSTALL (3) NEW PORTAL BEAMS AND (6) NEW SAG BRACES OVER TRACKS.

STAGE 2:

1. DURING TRACK #1 OUTAGE, INSTALL NEW OCS SUPPORT/REGISTRATION ASSEMBLIES AND REPROFILE WIRE RUN #1 BETWEEN STRUCTURES P-1666 AND P-1659. REMOVE EXISTING OCS SUPPORT ASSEMBLIES FROM STRUCTURE P-1664, P-1663, P-1662, AND P-1661.
2. DURING TRACK #2 OUTAGE, INSTALL NEW OCS SUPPORT/REGISTRATION ASSEMBLIES AND REPROFILE WIRE RUN #2 BETWEEN STRUCTURES P-1666 AND P-1659. REMOVE EXISTING OCS SUPPORT ASSEMBLIES FROM STRUCTURE P-1664, P-1663, P-1662, AND P-1661.

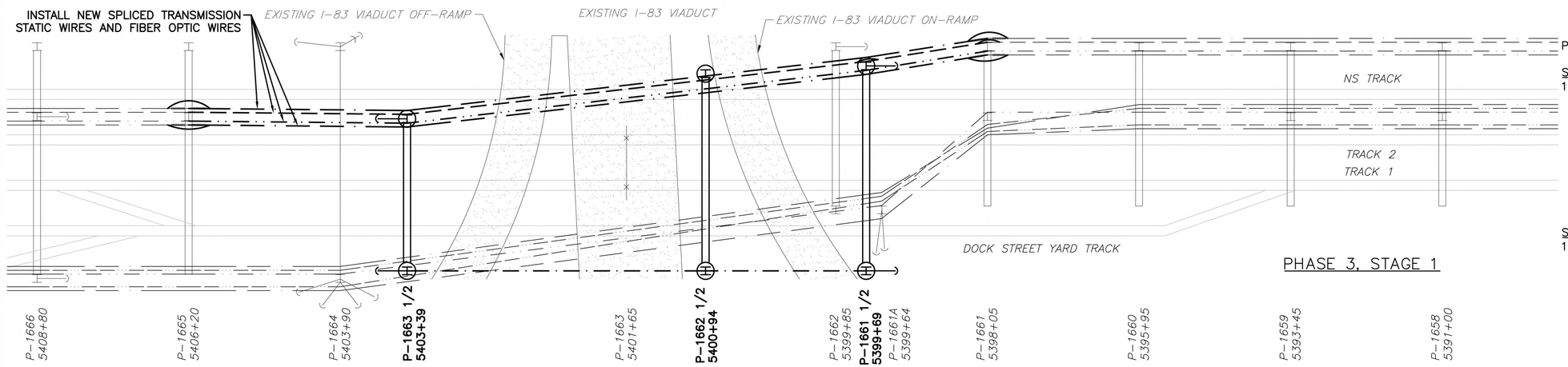

PHASE 3, STAGE 1

PHASE 3: ANCILLARY WORK FOR I-83 VIADUCT REPLACEMENT

STAGE 1 (NORTH POLE LINE ANCILLARY REPLACEMENT):

1. DURING A TRANSMISSION OUTAGE (NORTH POLE LINE #272 CIRCUIT ONLY), INSTALL TOP SECTION OF P-1661 1/2 NORTH COLUMN. INSTALL STATIC WIRE ASSEMBLY, FIBER OPTIC ASSEMBLY, AND TRANSMISSION CROSS ARMS. ATTACH NEW STATIC WIRE, FIBER OPTIC (SPLICE WITH EXCESS LOOP), AND TRANSMISSION WIRE TO NEW SUPPORT ASSEMBLIES BETWEEN STRUCTURES P-1665 AND P-1661. REMOVE PORTION OF P-1662 NORTH COLUMN, CUT EXISTING COLUMN TO A TEMPORARY MAXIMUM HEIGHT OF 80'-0" ABOVE HRL.

STAGE 2 (SOUTH POLE LINE ANCILLARY REPLACEMENT):

1. DURING A TRANSMISSION (SOUTH POLE LINE CIRCUIT #172 ONLY) AND SIGNAL POWER OUTAGE, INSTALL TOP SECTION OF P-1663 1/2 SOUTH COLUMN. INSTALL STATIC WIRE ASSEMBLY, TRANSMISSION AND SIGNAL POWER CROSS ARMS. ATTACH NEW STATIC WIRE, TRANSMISSION AND SIGNAL POWER CROSS ARMS. ATTACH NEW STATIC WIRE, TRANSMISSION WIRE, AND SIGNAL POWER WIRE TO NEW SUPPORT ASSEMBLIES BETWEEN STRUCTURES P-1665 AND P-1660. REMOVE PORTION OF P-1664 SOUTH COLUMN, CUT EXISTING COLUMN TO A TEMPORARY MAXIMUM HEIGHT OF 75'-0" ABOVE HRL. REMOVE SECTION OF EXSTING P-1661 SOUTH COLUMN TO 35'-0" ABOVE TOR.
2. DURING NIGHT OUTAGE(S), INSTALL NEW DOWN GUYS AND LATER SUPPORT CROSSBEAMS.

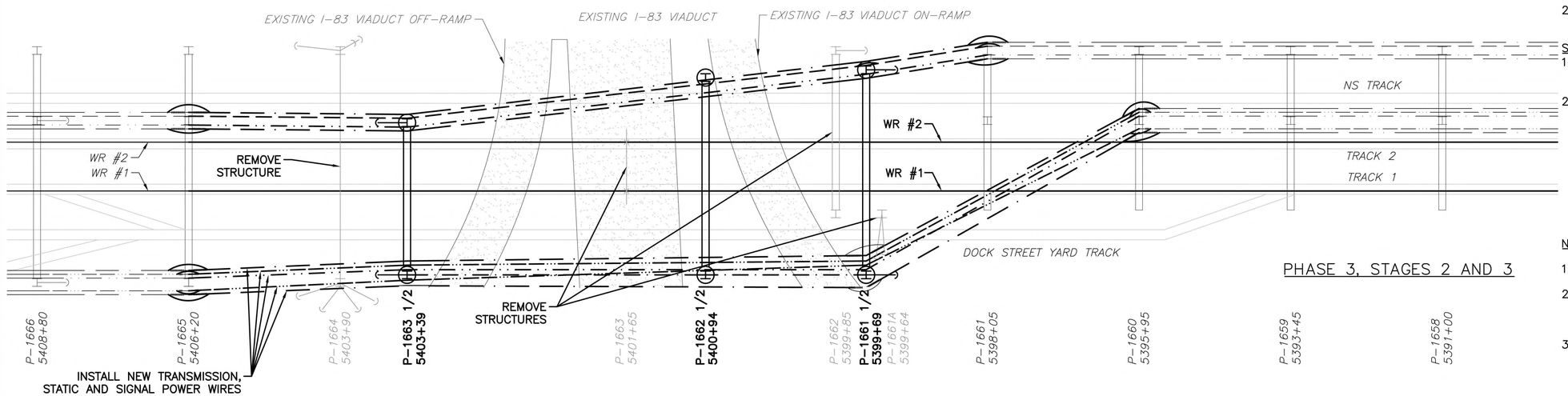

PHASE 3, STAGES 2 AND 3

STAGE 3:

1. REMOVE (3) EXISTING STRUCTURES: P-1664, P-1662, P-1661A AND BRIDGE ATTACHMENT P-1663 AND DEMOLISH EXISTING FOUNDATION TO 24 INCHES MIN. BELOW GRADE.
2. REMOVE (10) DOWN GUY ASSEMBLIES: P-1664, P-1662, P-1661A AND DEMOLISH EXISTING FOUNDATIONS TO 24" MIN. BELOW GRADE.

NOTES:

1. REFER TO STRUCTURAL DRAWINGS FOR COMPLETE PROJECT CONSTRUCTION PHASING AND STAGING.
2. PROJECT SITE ACCESS WILL BE FROM PAXTON STREET TO DOCK STREET YARD YARDOWN AREA. PROJECT ACCESS MUST BE MAINTAINED FOR AMTRAK AT ALL TIMES.
3. CONTRACTOR WILL NOT BE PERMITTED POWER OUTAGES ON BOTH THE NORTH POLE LINE TRANSMISSION CIRCUIT (#272) AND THE SOUTH POLE LINE TRANSMISSION CIRCUIT (#172) AT THE TIME SAME TIME

No.	Revisions	Date	By

AMTRAK

Office of Engineering
Engineering Design
National Railroad Passenger Corporation
30th Street Station, Philadelphia, Pennsylvania 19104

Approved	Date

COMMONWEALTH OF PENNSYLVANIA REGISTERED PROFESSIONAL ENGINEER MATTHEW JOHN SCHREFFLER PE096326

HNTB

HNTB Corporation
1650 Arch Street, Suite 1700
Philadelphia, PA 19103
215-568-6500

KEYSTONE CORRIDOR
I-83 RECONSTRUCTION EARLY ACTION
ELECTRIC TRACTION

CONTRUCTION STAGING (2 OF 3)

Designed PJC | Drawn PJC | Checked MJS | Date 06/13/2025

Job No.	43377
File Name	43377-S-ET-STG01
Sheet No.	9 OF 77
Dwg. No.	ET-011

PLOT SCALE: AS SHOWN
6/5/2025 11:22:56 AM
43377-s-et-stg01.dwg

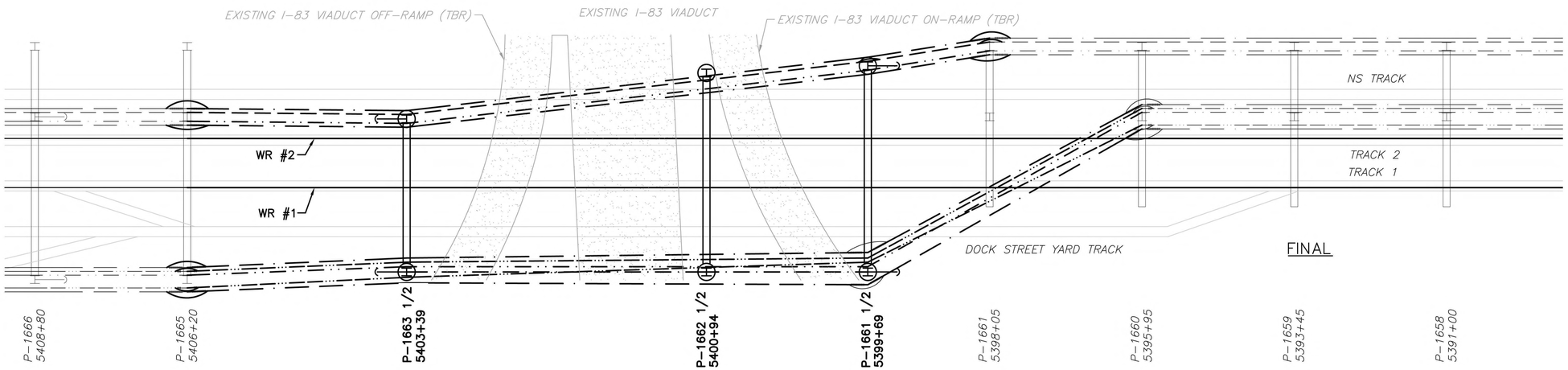

FINAL CONDITION, PRE-BRIDGE REPLACEMENT

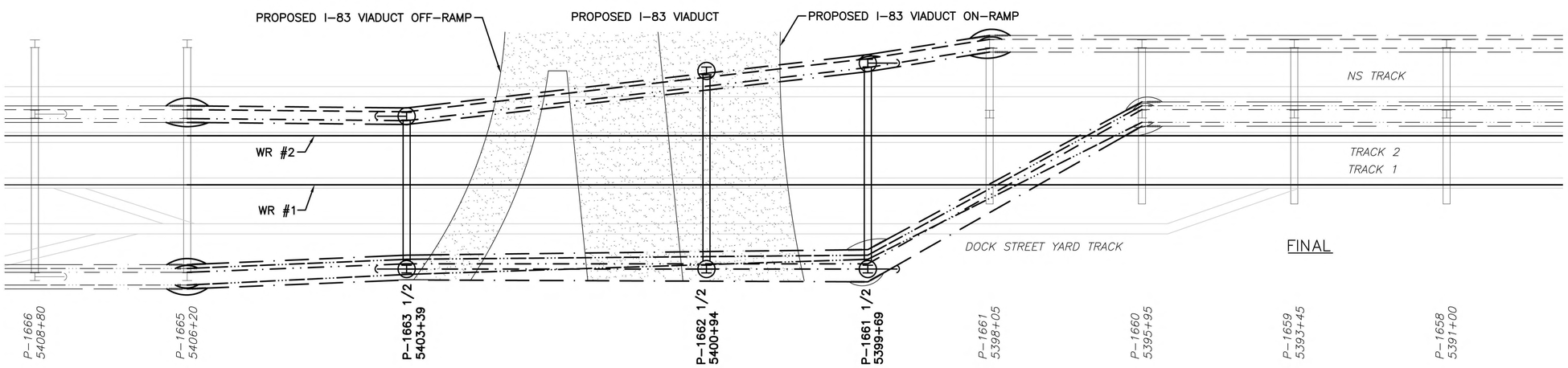

FINAL CONDITION

NOTES:

1. REFER TO STRUCTURAL DRAWINGS FOR COMPLETE PROJECT CONSTRUCTION PHASING AND STAGING.

PLOT SCALE: AS SHOWN 43377-s-et-stg01.dwg
6/5/2025 11:22:56 AM

No.	Revisions	Date	By

AMTRAK

Office of Engineering
Engineering Design
National Railroad Passenger Corporation
30th Street Station, Philadelphia, Pennsylvania 19104

Approved	Date

COMMONWEALTH OF PENNSYLVANIA
REGISTERED PROFESSIONAL
MATTHEW JOHN SCHREFFLER
ENGINEER
PE0963326

HNTB
HNTB Corporation
1650 Arch Street, Suite 1700
Philadelphia, PA 19103
215-568-6500

KEYSTONE CORRIDOR
I-83 RECONSTRUCTION EARLY ACTION
ELECTRIC TRACTION

CONSTRUCTION STAGING (3 OF 3)

Designed	Drawn	Checked	Date
PJC	PJC	MJS	06/13/2025

Job No.	43377
File Name	43377-S-ET-STG01
Sheet No.	10 OF 77
Dwg. No.	ET-012

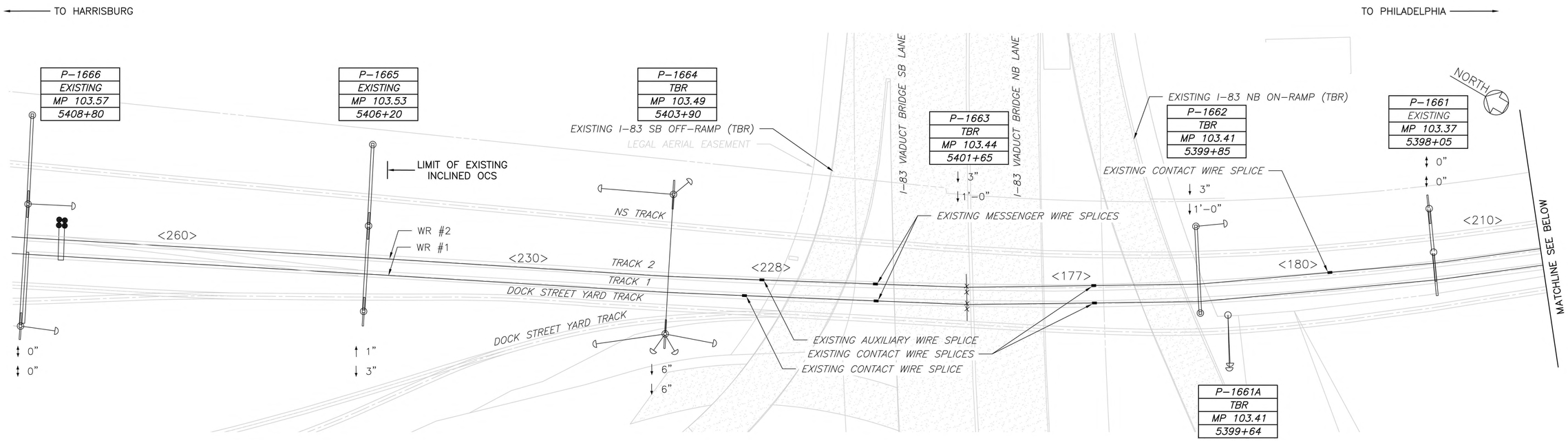

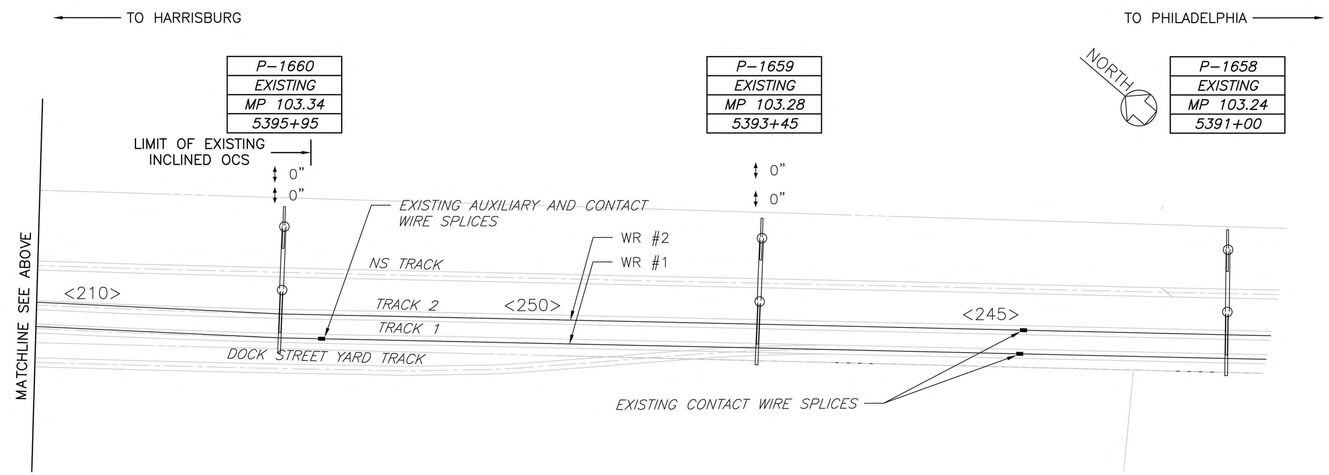

NOTES:

1. FOR OCS GENERAL NOTES SEE DRAWING ET–002. FOR LEGEND AND ABBREVIATIONS SEE DRAWING ET–003.
2. SPAN LENGTHS SHOWN ARE ACTUAL BASED ON SURVEY WHILE RR STATIONING OF THE STRUCTURES COMES FROM EXISTING STRUCTURE ERECTION DIAGRAMS PROVIDED BY AMTRAK. IN SOME CASES THE STATIONING MAY NOT REPRESENT THE PHYSICAL DISTANCE BETWEEN THE STRUCTURES.
3. EXISTING OCS CONDUCTOR SPLICE TYPES AND LOCATIONS WERE VERIFIED IN THE FIELD WITH AMTRAK ON 05/28/2024

0 40' 80' 120'
SCALE: 1" = 40'

No.	Revisions	Date	By

AMTRAK

Office of Engineering
Engineering Design
National Railroad Passenger Corporation
30th Street Station, Philadelphia, Pennsylvania 19104

Approved	Date

COMMONWEALTH OF PENNSYLVANIA
REGISTERED PROFESSIONAL ENGINEER
MATTHEW JOHN SCHREFFLER
PE096326

HNTB
HNTB Corporation
1650 Arch Street, Suite 1700
Philadelphia, PA 19103
215–568–6500

KEYSTONE CORRIDOR
I–83 RECONSTRUCTION EARLY ACTION
ELECTRIC TRACTION
EXISTING OCS WIRING LAYOUT

Designed PJC | Drawn PJC | Checked MJS | Date 06/13/2025

Job No. 43377
File Name 43377–S–ET–EWL01
Sheet No. 11 OF 77
Dwg. No. ET–100

PLOT SCALE: AS SHOWN
6/13/2025 11:46:41 AM
43377–s–et–ewl01.dwg

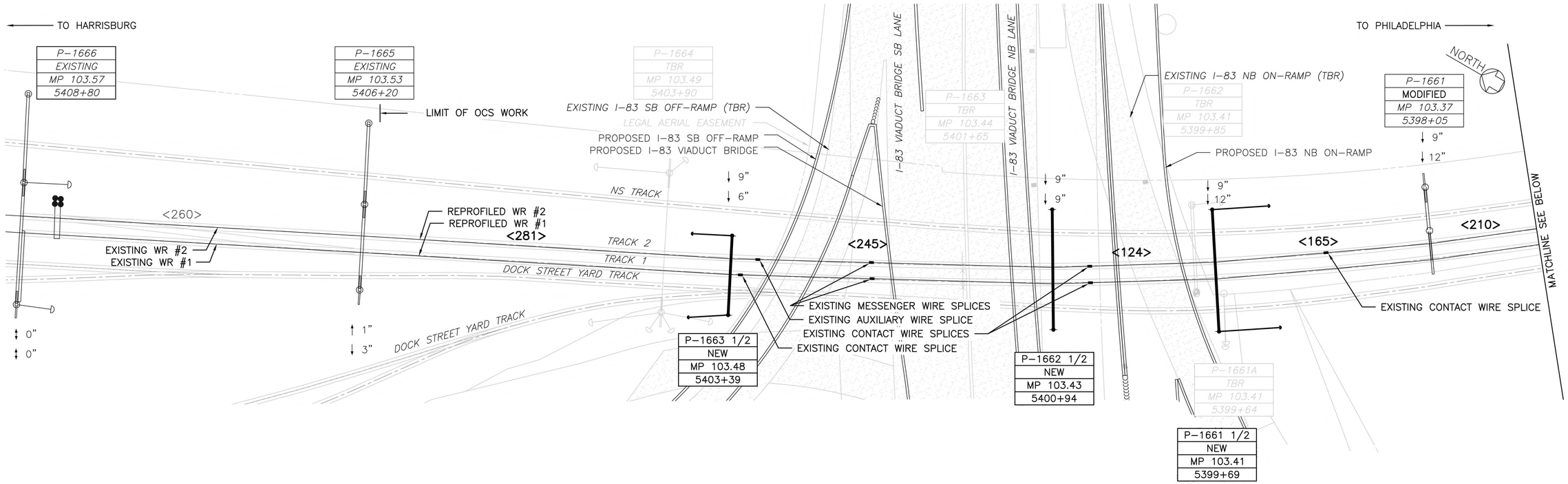

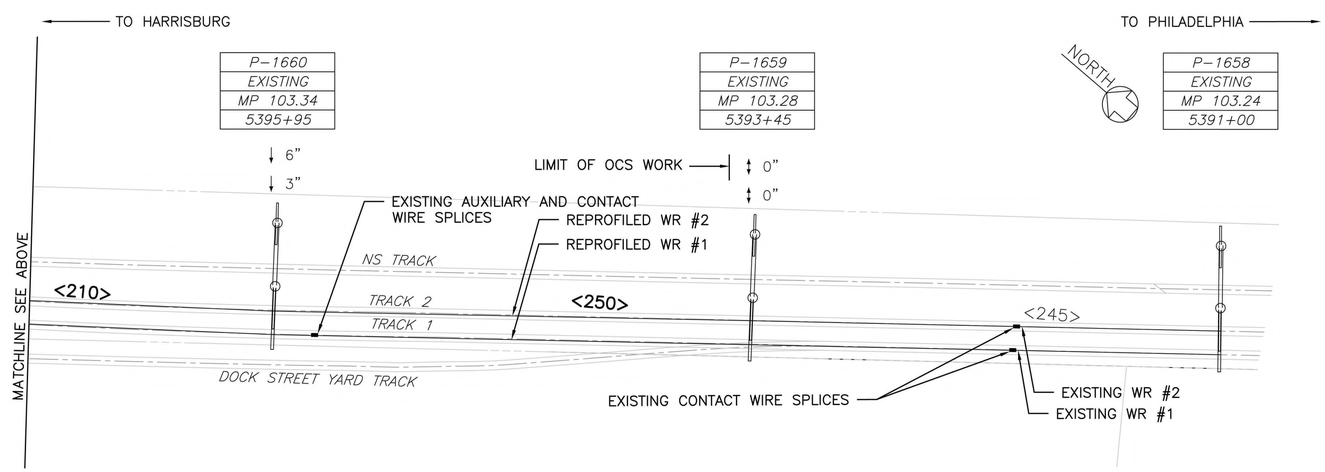

NOTES:

1. FOR OCS GENERAL NOTES SEE DRAWING ET–002. FOR LEGEND AND ABBREVIATIONS SEE DRAWING ET–003.
2. SPAN LENGTHS SHOWN ARE ACTUAL BASED ON SURVEY WHILE RR STATIONING OF THE STRUCTURES COMES FROM EXISTING STRUCTURE ERECTION DIAGRAMS PROVIDED BY AMTRAK. IN SOME CASES THE STATIONING MAY NOT REPRESENT THE PHYSICAL DISTANCE BETWEEN THE STRUCTURES.

0 40' 80' 120'
SCALE: 1" = 40'

PLOT SCALE: AS SHOWN 6/12/2025 11:46:12 AM 43377-s-et-ps01.dwg

No.	Revisions	Date	By

AMTRAK

Office of Engineering
Engineering Design
National Railroad Passenger Corporation
30th Street Station, Philadelphia, Pennsylvania 19104

Approved	Date

COMMONWEALTH OF PENNSYLVANIA REGISTERED PROFESSIONAL ENGINEER MATTHEW JOHN SCHREFFLER PE096326

HNTB
HNTB Corporation
1650 Arch Street, Suite 1700
Philadelphia, PA 19103
215-568-6500

KEYSTONE CORRIDOR
I–83 RECONSTRUCTION EARLY ACTION
ELECTRIC TRACTION

PROPOSED OCS WIRING LAYOUT

Designed PJC | Drawn PJC | Checked MJS | Date 06/13/2025

Job No. 43377
File Name 43377–S–ET–PSL01
Sheet No. 12 OF 77
Dwg. No. ET–101

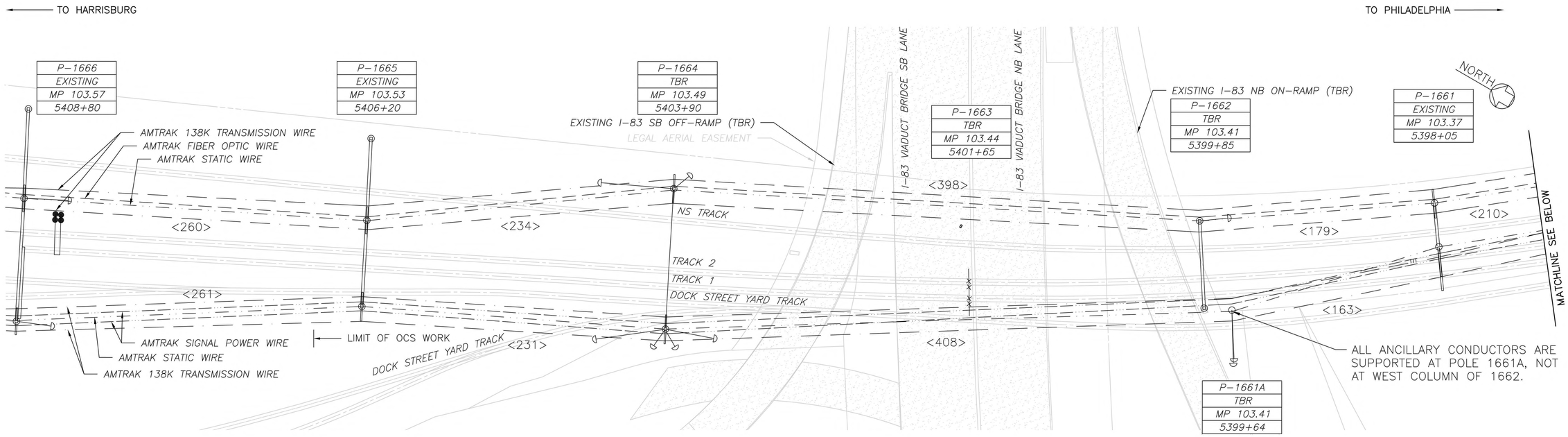

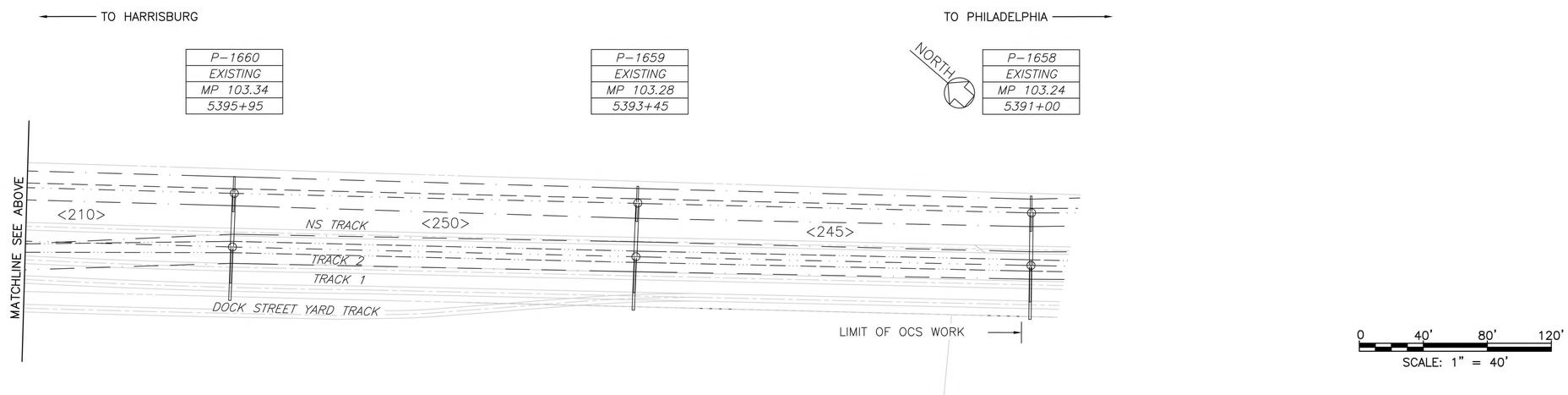

NOTES:

1. FOR OCS GENERAL NOTES SEE DRAWING ET–002. FOR LEGEND AND ABBREVIATIONS SEE DRAWING ET–003.
2. SPAN LENGTHS SHOWN ARE ACTUAL BASED ON SURVEY WHILE RR STATIONING OF THE STRUCTURES COMES FROM EXISTING STRUCTURE ERECTION DIAGRAMS PROVIDED BY AMTRAK. IN SOME CASES THE STATIONING MAY NOT REPRESENT THE PHYSICAL DISTANCE BETWEEN THE STRUCTURES.

LEGEND:

EXISTING AERIAL STATIC WIRE
EXISTING 138kV TRANSMISSION WIRE
EXISTING SIGNAL POWER WIRE
EXISTING FIBER OPTIC

No.	Revisions	Date	By

AMTRAK

Office of Engineering
Engineering Design
National Railroad Passenger Corporation
30th Street Station, Philadelphia, Pennsylvania 19104

Approved	Date

COMMONWEALTH OF PENNSYLVANIA
REGISTERED PROFESSIONAL
MATTHEW JOHN SCHREFFLER
ENGINEER
PE096326

HNTB
HNTB Corporation
1650 Arch Street, Suite 1700
Philadelphia, PA 19103
215–568–6500

KEYSTONE CORRIDOR
I–83 RECONSTRUCTION EARLY ACTION
ELECTRIC TRACTION

EXISTING ANCILLARY WIRING LAYOUT

Designed PJC | Drawn PJC | Checked MJS | Date 06/13/2025

Job No.	43377
File Name	43377–S–ET–AWL01
Sheet No.	13 OF 77
Dwg. No.	ET–102

PLOT SCALE: AS SHOWN
6/12/2025 11:26:30 AM 43377–s–et–cw001.dwg

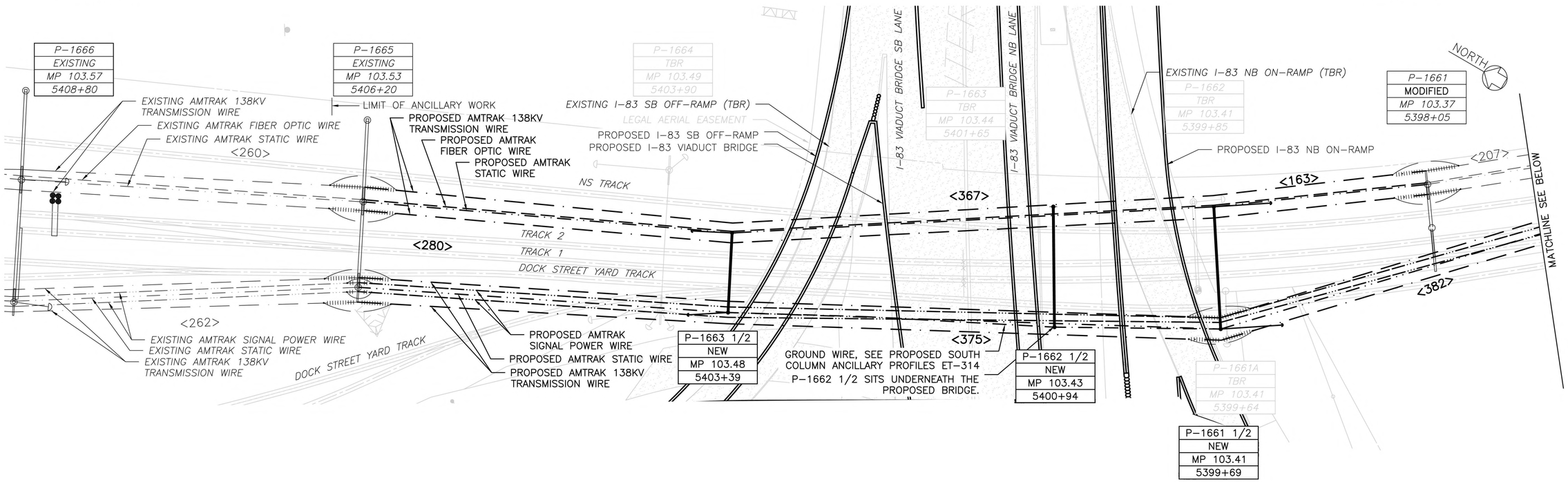

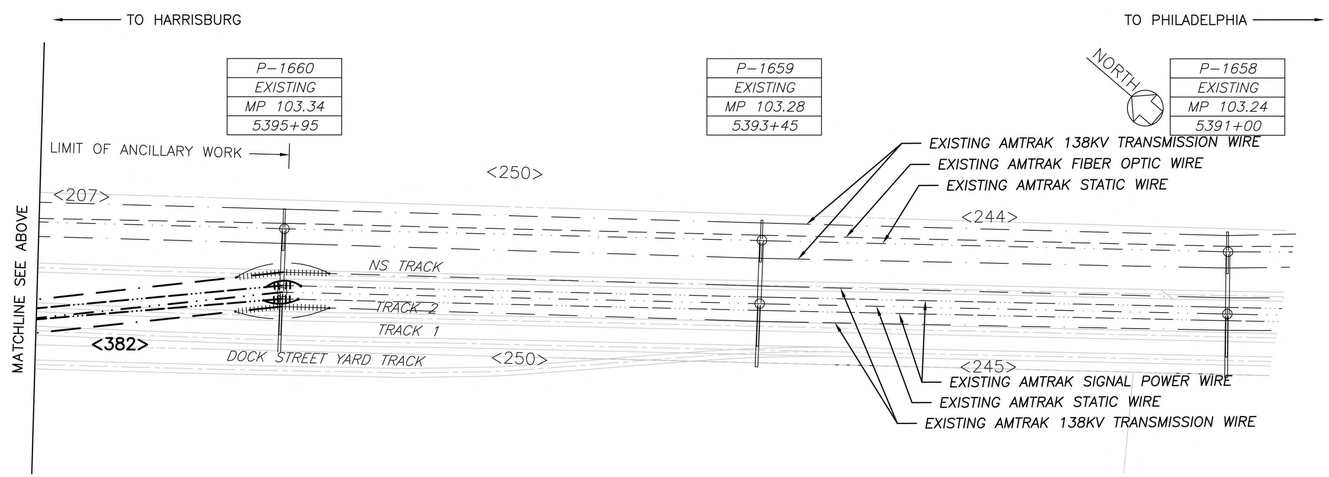

0 40' 80' 120'
SCALE: 1" = 40'

NOTES:

1. FOR OCS GENERAL NOTES SEE DRAWING ET–002. FOR LEGEND AND ABBREVIATIONS SEE DRAWING ET–003.
2. SPAN LENGTHS SHOWN ARE ACTUAL BASED ON SURVEY WHILE RR STATIONING OF THE STRUCTURES COMES FROM EXISTING STRUCTURE ERECTION DIAGRAMS PROVIDED BY AMTRAK. IN SOME CASES THE STATIONING MAY NOT REPRESENT THE PHYSICAL DISTANCE BETWEEN THE STRUCTURES.
3. PROPOSED I–83 BRIDGE BONDING AND GROUNDING AND FINAL TIE OFF TO THE OCS STRUCTURES WILL BE DESIGNED BY OTHERS.

LEGEND:

EXISTING AERIAL STATIC WIRE
EXISTING 138kV TRANSMISSION WIRE
EXISTING SIGNAL POWER WIRE
EXISTING FIBER OPTIC
PROPOSED AERIAL STATIC WIRE
PROPOSED 138kV TRANSMISSION WIRE
PROPOSED SIGNAL POWER WIRE
PROPOSED FIBER OPTIC
PROPOSED GROUND WIRE

No.	Revisions	Date	By

AMTRAK

Office of Engineering
Engineering Design
National Railroad Passenger Corporation
30th Street Station, Philadelphia, Pennsylvania 19104

Approved	Date

COMMONWEALTH OF PENNSYLVANIA REGISTERED PROFESSIONAL ENGINEER MATTHEW JOHN SCHREFFLER PE096326

HNTB
HNTB Corporation
1650 Arch Street, Suite 1700
Philadelphia, PA 19103
215–568–6500

KEYSTONE CORRIDOR
I–83 RECONSTRUCTION EARLY ACTION
ELECTRIC TRACTION
PROPOSED ANCILLARY WIRING LAYOUT

Designed PJC | Drawn PJC | Checked MJS | Date 06/13/2025

Job No. 43377
File Name 43377–S–ET–PAWL01
Sheet No. 14 OF 77
Dwg. No. ET–103

PLOT SCALE: AS SHOWN
6/12/2025 11:25:23 AM
43377–s–et–paw01.dwg

WIRE PARAMETERS			
WIRE	DESCRIPTION	LB/FT	TENSION
MESSENGER	5/8" COPPERWELD	0.85 LB/FT	4640 LB
AUXILIARY	4/0 COPPER GROOVED	0.64 LB/FT	1200 LB
CONTACT	4/0 BRONZE GROOVED	0.64 LB/FT	3500 LB
TOTAL SYSTEM WT INCLUDING HANGERS		2.21 LB/FT	

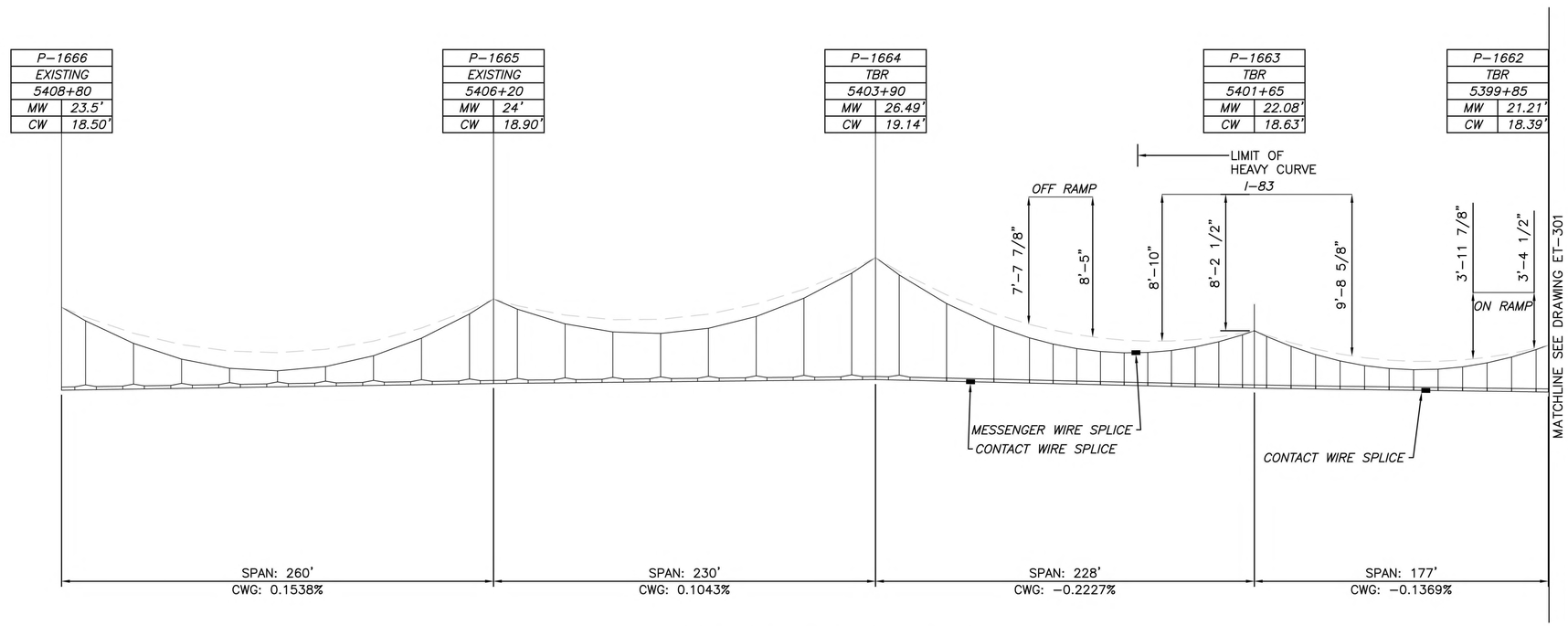

WIRE RUN #1 EXISTING PROFILE

NOTES:

1. FOR GENERAL NOTES AND DIVISION OF WORK SEE SHEET ET–002.
2. FOR LEGEND AND ABBREVIATIONS SEE SHEET ET–003.
3. FOR PROPOSED WIRING LAYOUT PLANS, SEE DRAWINGS ET–101
4. THE CATENARY WIRE PROFILE SHEETS ARE SHOWN FOR A 60°F TEMPERATURE/TENSION PROFILE CONDITION.
5. SPAN LENGTHS SHOWN ARE ACTUAL BASED ON SURVEY, WHILE STATIONING OF THE STRUCTURES COMES FROM AMTRAK AS–BUILT DRAWINGS. IN SOME CASES THE STATIONING MAY NOT REPRESENT THE PHYSICAL DISTANCE BETWEEN THE STRUCTURES.
6. THE HANGER SPACING AND CONTACT WIRE GRADIENT VALUES ARE CALCULATED USING ACTUAL MEASURED DISTANCE BETWEEN ADJACENT STRUCTURES SUPPORTING THE CATENARY SYSTEM.

SCALE:

1"=40'–0" HORIZONTAL

0 40'–0" 80'–0" 120'–0"

0 4'–0" 8'–0" 12'–0"

1"=4'–0" VERTICAL

PLOT SCALE: AS SHOWN
6/12/2025 11:46:04 AM 43377-s-et-prf001.dwg

No.	Revisions	Date	By

AMTRAK

Office of Engineering
Engineering Design
National Railroad Passenger Corporation
30th Street Station, Philadelphia, Pennsylvania 19104

Approved	Date

COMMONWEALTH OF PENNSYLVANIA REGISTERED PROFESSIONAL ENGINEER MATTHEW JOHN SCHREFFLER PE096326

HNTB
HNTB Corporation
1650 Arch Street, Suite 1700
Philadelphia, PA 19103
215–568–6500

KEYSTONE CORRIDOR
I–83 RECONSTRUCTION EARLY ACTION
ELECTRIC TRACTION

TRACK 1 EXISTING OCS WIRE PROFILE (1 OF 2)

Designed PJC Drawn PJC Checked MJS Date 06/13/2025

Job No.	43377
File Name	43377–s–et–prf001
Sheet No.	15 OF 77
Dwg. No.	ET–300

WIRE PARAMETERS			
WIRE	DESCRIPTION	LB/FT	TENSION
MESSENGER	5/8" COPPERWELD	0.85 LB/FT	4640 LB
AUXILIARY	4/0 COPPER GROOVED	0.64 LB/FT	1200 LB
CONTACT	4/0 BRONZE GROOVED	0.64 LB/FT	3500 LB
TOTAL SYSTEM WT INCLUDING HANGERS		2.21 LB/FT	

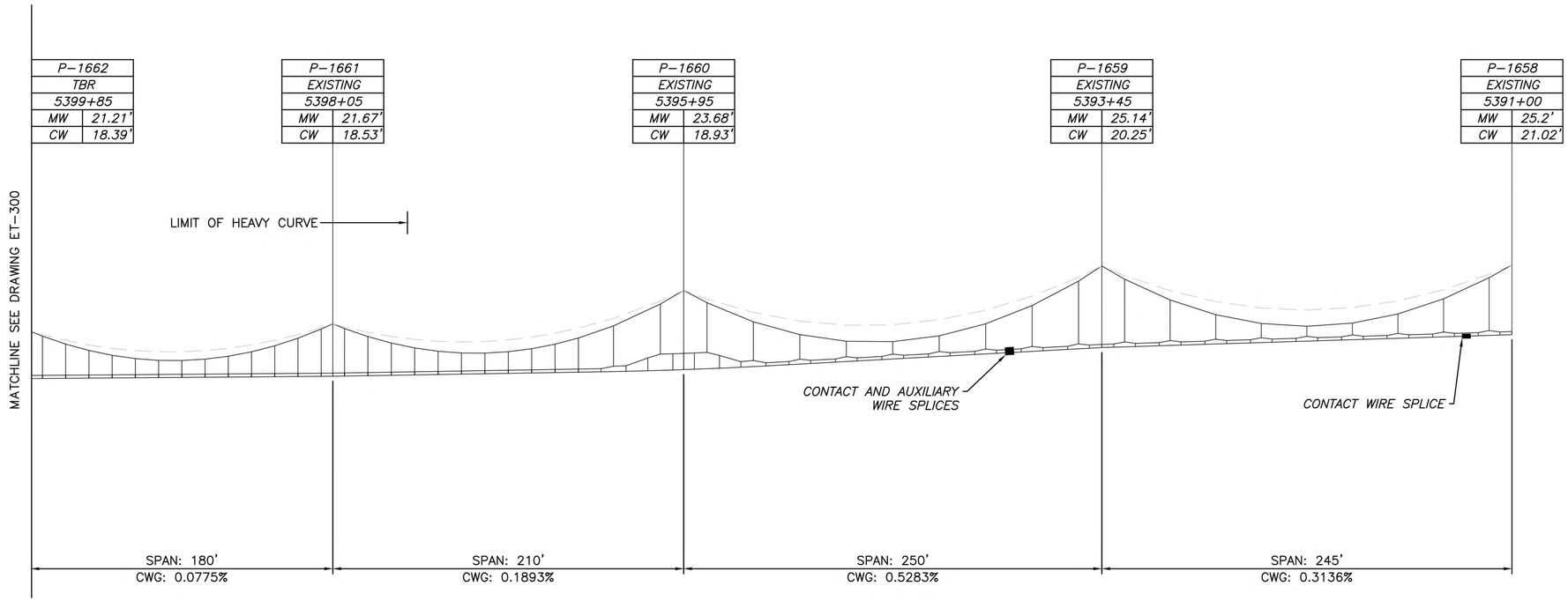

WIRE RUN #1 EXISTING PROFILE

NOTES:

1. FOR GENERAL NOTES AND DIVISION OF WORK SEE SHEET ET–002.
2. FOR LEGEND AND ABBREVIATIONS SEE SHEET ET–003.
3. FOR PROPOSED WIRING LAYOUT PLANS, SEE DRAWINGS ET–101
4. THE CATENARY WIRE PROFILE SHEETS ARE SHOWN FOR A 60°F TEMPERATURE/TENSION PROFILE CONDITION.
5. SPAN LENGTHS SHOWN ARE ACTUAL BASED ON SURVEY, WHILE STATIONING OF THE STRUCTURES COMES FROM AMTRAK AS–BUILT DRAWINGS. IN SOME CASES THE STATIONING MAY NOT REPRESENT THE PHYSICAL DISTANCE BETWEEN THE STRUCTURES.
6. THE HANGER SPACING AND CONTACT WIRE GRADIENT VALUES ARE CALCULATED USING ACTUAL MEASURED DISTANCE BETWEEN ADJACENT STRUCTURES SUPPORTING THE CATENARY SYSTEM.

SCALE:

1"=40'–0" HORIZONTAL

0 40'–0" 80'–0" 120'–0"

0 4'–0" 8'–0" 12'–0"

1"=4'–0" VERTICAL

PLOT SCALE: AS SHOWN
6/13/2025 11:46:04 AM 43377–s–et–prf001.dwg

No.	Revisions	Date	By

AMTRAK

Office of Engineering
Engineering Design
National Railroad Passenger Corporation
30th Street Station, Philadelphia, Pennsylvania 19104

Approved	Date

COMMONWEALTH OF PENNSYLVANIA REGISTERED PROFESSIONAL ENGINEER MATTHEW JOHN SCHREFFLER PE096328

HNTB
HNTB Corporation
1650 Arch Street, Suite 1700
Philadelphia, PA 19103
215–568–6500

KEYSTONE CORRIDOR
I–83 RECONSTRUCTION EARLY ACTION
ELECTRIC TRACTION

TRACK 1 EXISTING OCS WIRE PROFILE (2 OF 2)

Designed	PJC	Drawn	PJC	Checked	MJS	Date	06/13/2025

Job No.	43377
File Name	43377–s–et–prf001
Sheet No.	16 OF 77
Dwg. No.	ET–301

WIRE PARAMETERS			
WIRE	DESCRIPTION	LB/FT	TENSION
MESSENGER	5/8" COPPERWELD	0.85 LB/FT	4640 LB
AUXILIARY	4/0 COPPER GROOVED	0.64 LB/FT	1200 LB
CONTACT	4/0 BRONZE GROOVED	0.64 LB/FT	3500 LB
TOTAL SYSTEM WT INCLUDING HANGERS		2.21 LB/FT	

BILL OF MATERIALS – WR#1 (1 OF 2)				
ITEM	REF. DWG.	DESCRIPTION	UNIT	QTY.
H	ET–500	CONTACT – AUXILLARY WIRE CLIP	EA	48
J	ET–500	HANGER ASSEMBLY	EA	18
ME	ET–500	HANGER ASSEMBLY	EA	6

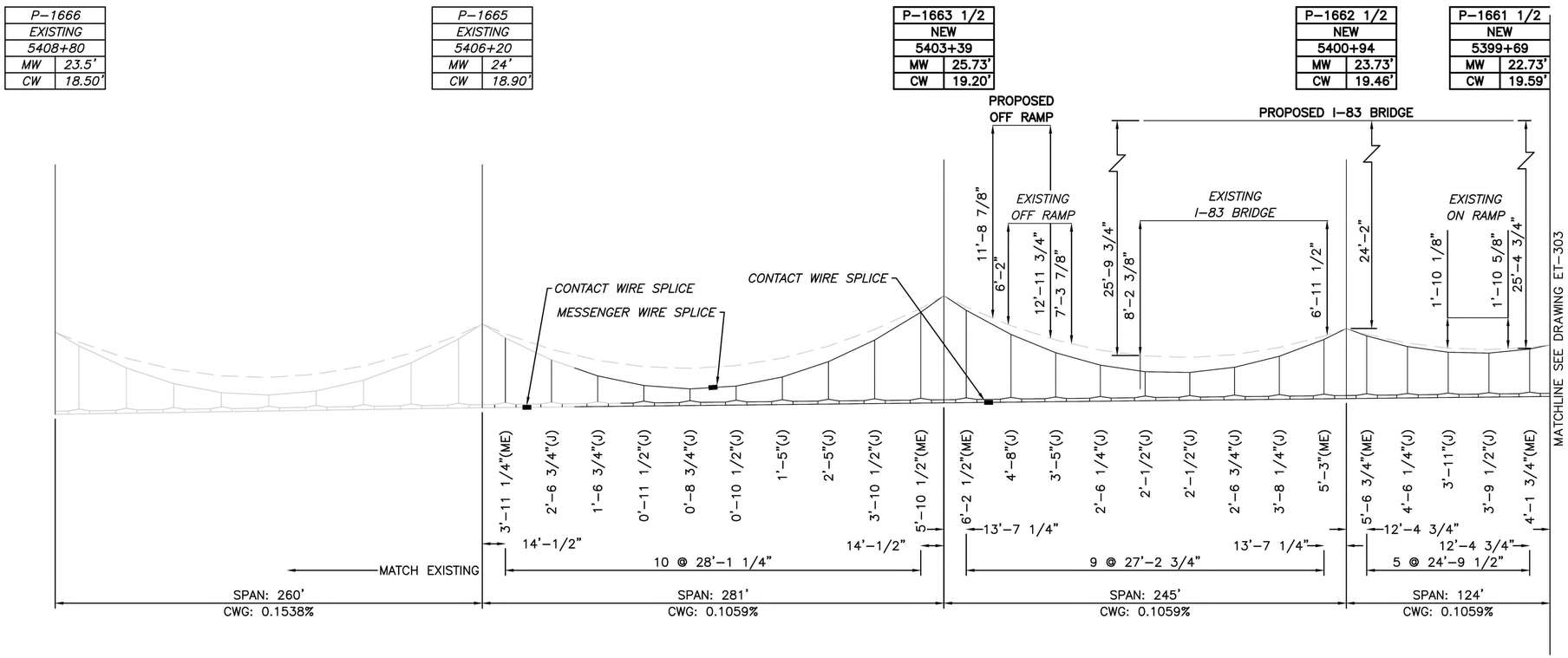

TRACK 1 PROPOSED PROFILE

NOTES:

1. FOR GENERAL NOTES AND DIVISION OF WORK SEE SHEET ET–002.
2. FOR LEGEND AND ABBREVIATIONS SEE SHEET ET–003.
3. FOR PROPOSED WIRING LAYOUT PLANS, SEE DRAWINGS ET–101
4. THE CATENARY WIRE PROFILE SHEETS ARE SHOWN FOR A 60°F TEMPERATURE/TENSION PROFILE CONDITION.
5. SPAN LENGTHS SHOWN ARE ACTUAL BASED ON SURVEY, WHILE STATIONING OF THE STRUCTURES COMES FROM AMTRAK AS–BUILT DRAWINGS. IN SOME CASES THE STATIONING MAY NOT REPRESENT THE PHYSICAL DISTANCE BETWEEN THE STRUCTURES.
6. THE HANGER SPACING AND CONTACT WIRE GRADIENT VALUES ARE CALCULATED USING ACTUAL MEASURED DISTANCE BETWEEN ADJACENT STRUCTURES SUPPORTING THE CATENARY SYSTEM.

SCALE:

1"=40'–0" HORIZONTAL

0 40'–0" 80'–0" 120'–0"

0 4'–0" 8'–0" 12'–0"

1"=4'–0" VERTICAL

No.	Revisions	Date	By

AMTRAK

Office of Engineering
Engineering Design
National Railroad Passenger Corporation
30th Street Station, Philadelphia, Pennsylvania 19104

Approved	Date

COMMONWEALTH OF PENNSYLVANIA REGISTERED PROFESSIONAL ENGINEER MATTHEW JOHN SCHREFFLER PE096328

HNTB
HNTB Corporation
1650 Arch Street, Suite 1700
Philadelphia, PA 19103
215–568–6500

KEYSTONE CORRIDOR
I–83 RECONSTRUCTION EARLY ACTION
ELECTRIC TRACTION

TRACK 1 PROPOSED OCS WIRE PROFILE (1 OF 2)

Designed	PJC	Drawn	PJC	Checked	MJS	Date	06/13/2025

Job No.	43377
File Name	43377–s–et–prf001
Sheet No.	17 OF 77
Dwg. No.	ET–302

PLOT SCALE: AS SHOWN
6/13/2025 11:46:04 AM 43377–s–et–prf001.dwg

WIRE PARAMETERS			
WIRE	DESCRIPTION	LB/FT	TENSION
MESSENGER	5/8" COPPERWELD	0.85 LB/FT	4640 LB
AUXILIARY	4/0 COPPER GROOVED	0.64 LB/FT	1200 LB
CONTACT	4/0 BRONZE GROOVED	0.64 LB/FT	3500 LB
TOTAL SYSTEM WT INCLUDING HANGERS		2.21 LB/FT	

BILL OF MATERIALS – WR#1 (2 OF 2)				
ITEM	REF. DWG.	DESCRIPTION	UNIT	QTY.
H	ET–500	CONTACT – AUXILLARY WIRE CLIP	EA	44
J	ET–500	HANGER ASSEMBLY	EA	16
ME	ET–500	HANGER ASSEMBLY	EA	6

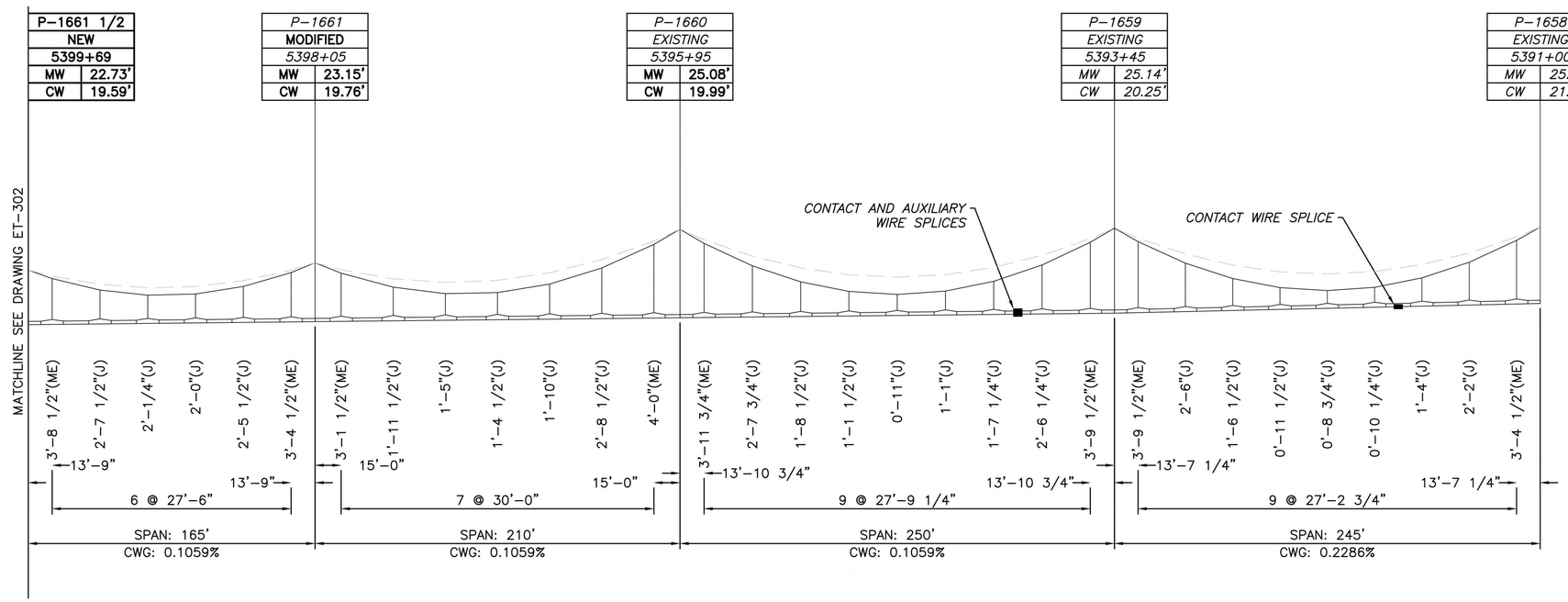

TRACK 1 PROPOSED PROFILE

NOTES:

1. FOR GENERAL NOTES AND DIVISION OF WORK SEE SHEET ET–002.
2. FOR LEGEND AND ABBREVIATIONS SEE SHEET ET–003.
3. FOR PROPOSED WIRING LAYOUT PLANS, SEE DRAWINGS ET–101
4. THE CATENARY WIRE PROFILE SHEETS ARE SHOWN FOR A 60°F TEMPERATURE/TENSION PROFILE CONDITION.
5. SPAN LENGTHS SHOWN ARE ACTUAL BASED ON SURVEY, WHILE STATIONING OF THE STRUCTURES COMES FROM AMTRAK AS–BUILT DRAWINGS. IN SOME CASES THE STATIONING MAY NOT REPRESENT THE PHYSICAL DISTANCE BETWEEN THE STRUCTURES.
6. THE HANGER SPACING AND CONTACT WIRE GRADIENT VALUES ARE CALCULATED USING ACTUAL MEASURED DISTANCE BETWEEN ADJACENT STRUCTURES SUPPORTING THE CATENARY SYSTEM.

SCALE:

1"=40'–0" HORIZONTAL

0 40'–0" 80'–0" 120'–0"

0 4'–0" 8'–0" 12'–0"

1"=4'–0" VERTICAL

PLOT SCALE: AS SHOWN 43377–s–et–prf001.dwg
6/12/2025 11:46:04 AM

No.	Revisions	Date	By

AMTRAK

Office of Engineering
Engineering Design
National Railroad Passenger Corporation
30th Street Station, Philadelphia, Pennsylvania 19104

Approved	Date

COMMONWEALTH OF PENNSYLVANIA REGISTERED PROFESSIONAL ENGINEER MATTHEW JOHN SCHREFFLER PE096326

HNTB
HNTB Corporation
1650 Arch Street, Suite 1700
Philadelphia, PA 19103
215–568–6500

KEYSTONE CORRIDOR
I–83 RECONSTRUCTION EARLY ACTION
ELECTRIC TRACTION

TRACK 1 PROPOSED OCS WIRE PROFILE (2 OF 2)

Designed	PJC	Drawn	PJC	Checked	MJS	Date	06/13/2025

Job No.	43377
File Name	43377–s–et–prf001
Sheet No.	18 OF 77
Dwg. No.	ET–303

WIRE PARAMETERS			
WIRE	DESCRIPTION	LB/FT	TENSION
MESSENGER	5/8" COPPERWELD	0.85 LB/FT	4640 LB
AUXILIARY	4/0 COPPER GROOVED	0.64 LB/FT	1200 LB
CONTACT	4/0 BRONZE GROOVED	0.64 LB/FT	3500 LB
TOTAL SYSTEM WT INCLUDING HANGERS		2.21 LB/FT	

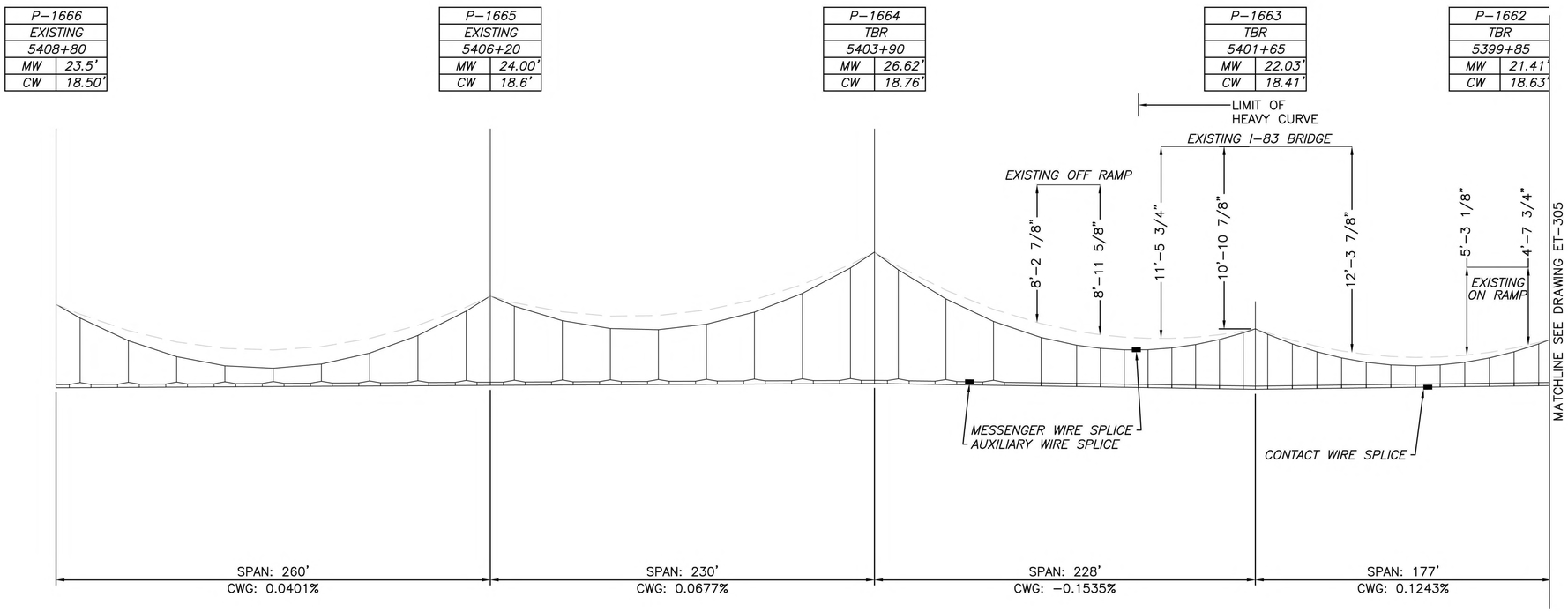

WIRE RUN #2 EXISTING PROFILE

NOTES:

1. FOR GENERAL NOTES AND DIVISION OF WORK SEE SHEET ET–002.
2. FOR LEGEND AND ABBREVIATIONS SEE SHEET ET–003.
3. FOR PROPOSED WIRING LAYOUT PLANS, SEE DRAWINGS ET–101
4. THE CATENARY WIRE PROFILE SHEETS ARE SHOWN FOR A 60°F TEMPERATURE/TENSION PROFILE CONDITION.
5. SPAN LENGTHS SHOWN ARE ACTUAL BASED ON SURVEY, WHILE STATIONING OF THE STRUCTURES COMES FROM AMTRAK AS–BUILT DRAWINGS. IN SOME CASES THE STATIONING MAY NOT REPRESENT THE PHYSICAL DISTANCE BETWEEN THE STRUCTURES.
6. THE HANGER SPACING AND CONTACT WIRE GRADIENT VALUES ARE CALCULATED USING ACTUAL MEASURED DISTANCE BETWEEN ADJACENT STRUCTURES SUPPORTING THE CATENARY SYSTEM.

SCALE:

1"=40'–0" HORIZONTAL

0 40'–0" 80'–0" 120'–0"

0 4'–0" 8'–0" 12'–0"

1"=4'–0" VERTICAL

No.	Revisions	Date	By

AMTRAK

Office of Engineering
Engineering Design
National Railroad Passenger Corporation
30th Street Station, Philadelphia, Pennsylvania 19104

Approved	Date

COMMONWEALTH OF PENNSYLVANIA REGISTERED PROFESSIONAL ENGINEER MATTHEW JOHN SCHREFFLER PE096328

HNTB
HNTB Corporation
1650 Arch Street, Suite 1700
Philadelphia, PA 19103
215–568–6500

KEYSTONE CORRIDOR
I–83 RECONSTRUCTION EARLY ACTION
ELECTRIC TRACTION

TRACK 2 EXISTING OCS WIRE PROFILE (1 OF 2)

Designed PJC Drawn PJC Checked MJS Date 06/13/2025

Job No. 43377
File Name 43377–s–et–prf001
Sheet No. 19 OF 77
Dwg. No. ET–304

PLOT SCALE: AS SHOWN
6/12/2025 11:46:04 AM 43377–s–et–prf001.dwg

WIRE PARAMETERS			
WIRE	DESCRIPTION	LB/FT	TENSION
MESSENGER	5/8" COPPERWELD	0.85 LB/FT	4640 LB
AUXILIARY	4/0 COPPER GROOVED	0.64 LB/FT	1200 LB
CONTACT	4/0 BRONZE GROOVED	0.64 LB/FT	3500 LB
TOTAL SYSTEM WT INCLUDING HANGERS		2.21 LB/FT	

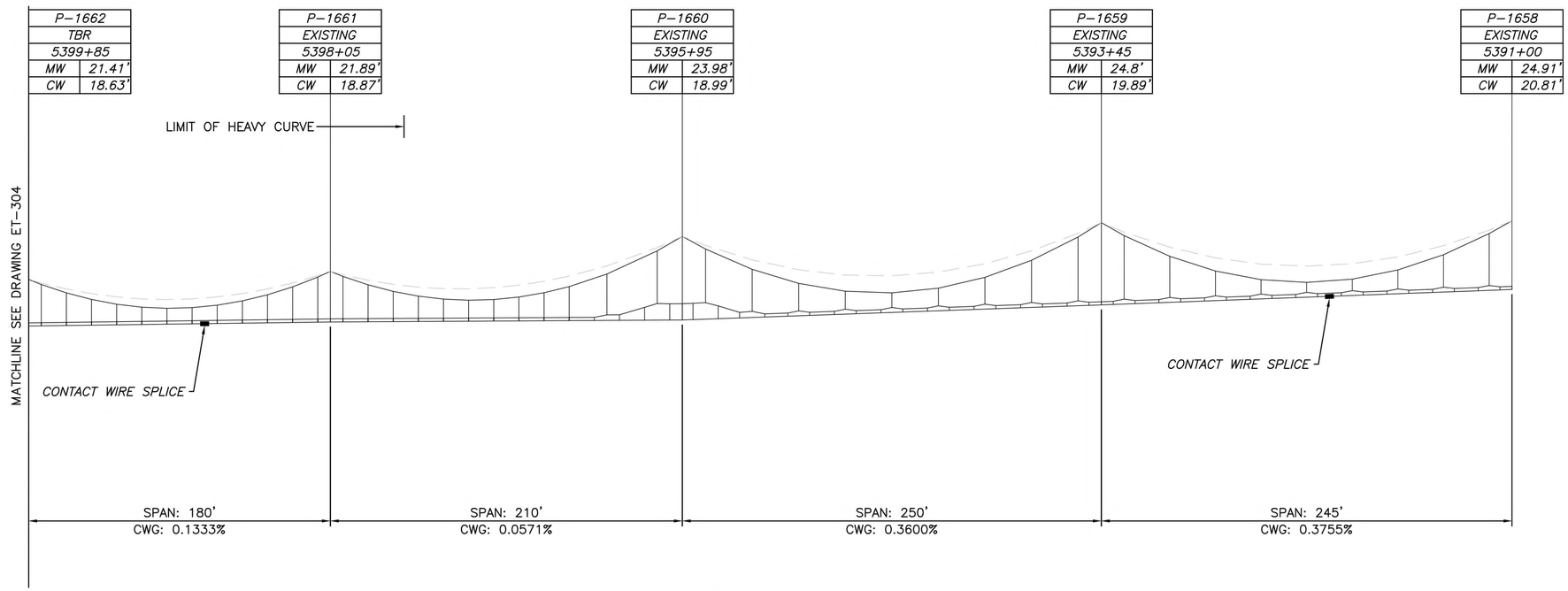

WIRE RUN #2 EXISTING PROFILE

NOTES:

1. FOR GENERAL NOTES AND DIVISION OF WORK SEE SHEET ET–002.
2. FOR LEGEND AND ABBREVIATIONS SEE SHEET ET–003.
3. FOR PROPOSED WIRING LAYOUT PLANS, SEE DRAWINGS ET–101
4. THE CATENARY WIRE PROFILE SHEETS ARE SHOWN FOR A 60°F TEMPERATURE/TENSION PROFILE CONDITION.
5. SPAN LENGTHS SHOWN ARE ACTUAL BASED ON SURVEY, WHILE STATIONING OF THE STRUCTURES COMES FROM AMTRAK AS–BUILT DRAWINGS. IN SOME CASES THE STATIONING MAY NOT REPRESENT THE PHYSICAL DISTANCE BETWEEN THE STRUCTURES.
6. THE HANGER SPACING AND CONTACT WIRE GRADIENT VALUES ARE CALCULATED USING ACTUAL MEASURED DISTANCE BETWEEN ADJACENT STRUCTURES SUPPORTING THE CATENARY SYSTEM.

SCALE:

1"=40'–0" HORIZONTAL

0 40'–0" 80'–0" 120'–0"

0 4'–0" 8'–0" 12'–0"

1"=4'–0" VERTICAL

PLOT SCALE: AS SHOWN
6/12/2025 11:46:34 AM 43377–s–et–prf001.dwg

No.	Revisions	Date	By

AMTRAK

Office of Engineering
Engineering Design
National Railroad Passenger Corporation
30th Street Station, Philadelphia, Pennsylvania 19104

Approved	Date

COMMONWEALTH OF PENNSYLVANIA REGISTERED PROFESSIONAL ENGINEER MATTHEW JOHN SCHROEFFLER PE096326

HNTB
HNTB Corporation
1650 Arch Street, Suite 1700
Philadelphia, PA 19103
215–568–6500

KEYSTONE CORRIDOR
I–83 RECONSTRUCTION EARLY ACTION
ELECTRIC TRACTION

TRACK 2 EXISTING OCS WIRE PROFILE (2 OF 2)

Designed	PJC	Drawn	PJC	Checked	MJS	Date	06/13/2025

Job No.	43377
File Name	43377–s–et–prf001
Sheet No.	20 OF 77
Dwg. No.	ET–305

WIRE PARAMETERS			
WIRE	DESCRIPTION	LB/FT	TENSION
MESSENGER	5/8" COPPERWELD	0.85 LB/FT	4640 LB
AUXILIARY	4/0 COPPER GROOVED	0.64 LB/FT	1200 LB
CONTACT	4/0 BRONZE GROOVED	0.64 LB/FT	3500 LB
TOTAL SYSTEM WT INCLUDING HANGERS		2.21 LB/FT	

BILL OF MATERIALS – WR#1 (1 OF 2)				
ITEM	REF. DWG.	DESCRIPTION	UNIT	QTY.
H	ET–500	CONTACT – AUXILLARY WIRE CLIP	EA	48
J	ET–500	HANGER ASSEMBLY	EA	18
ME	ET–500	HANGER ASSEMBLY	EA	6

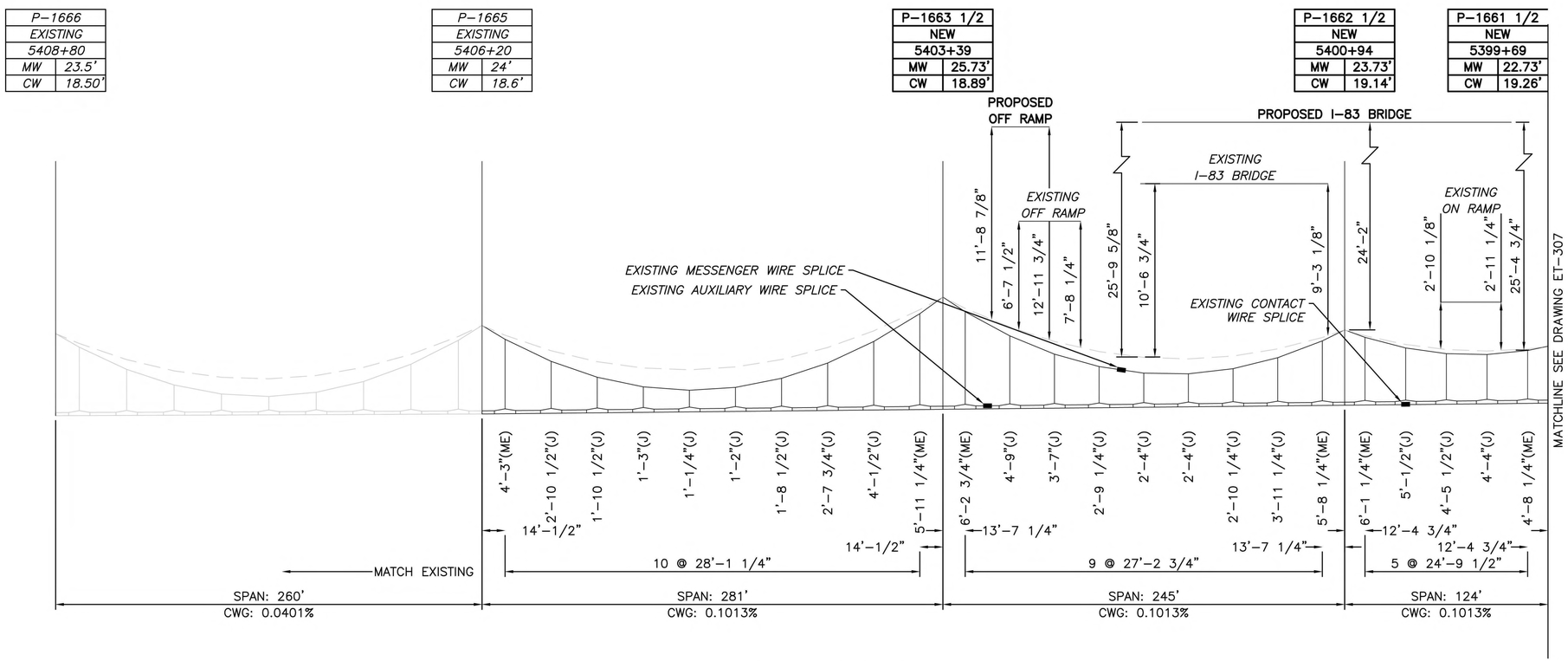

TRACK 2 PROPOSED PROFILE

NOTES:

1. FOR GENERAL NOTES AND DIVISION OF WORK SEE SHEET ET–002.
2. FOR LEGEND AND ABBREVIATIONS SEE SHEET ET–003.
3. FOR PROPOSED WIRING LAYOUT PLANS, SEE DRAWINGS ET–101
4. THE CATENARY WIRE PROFILE SHEETS ARE SHOWN FOR A 60°F TEMPERATURE/TENSION PROFILE CONDITION.
5. SPAN LENGTHS SHOWN ARE ACTUAL BASED ON SURVEY, WHILE STATIONING OF THE STRUCTURES COMES FROM AMTRAK AS–BUILT DRAWINGS. IN SOME CASES THE STATIONING MAY NOT REPRESENT THE PHYSICAL DISTANCE BETWEEN THE STRUCTURES.
6. THE HANGER SPACING AND CONTACT WIRE GRADIENT VALUES ARE CALCULATED USING ACTUAL MEASURED DISTANCE BETWEEN ADJACENT STRUCTURES SUPPORTING THE CATENARY SYSTEM.

SCALE:

1"=40'–0" HORIZONTAL

0 40'–0" 80'–0" 120'–0"

0 4'–0" 8'–0" 12'–0"

1"=4'–0" VERTICAL

PLOT SCALE: AS SHOWN
6/12/2025 11:48:04 AM 43377–s–et–prf001.dwg

No.	Revisions	Date	By

AMTRAK

Office of Engineering
Engineering Design
National Railroad Passenger Corporation
30th Street Station, Philadelphia, Pennsylvania 19104

Approved	Date

COMMONWEALTH OF PENNSYLVANIA REGISTERED PROFESSIONAL ENGINEER MATTHEW JOHN SCHREFFLER PE096326

HNTB
HNTB Corporation
1650 Arch Street, Suite 1700
Philadelphia, PA 19103
215–568–6500

KEYSTONE CORRIDOR
I–83 RECONSTRUCTION EARLY ACTION
ELECTRIC TRACTION

TRACK 2 PROPOSED OCS WIRE PROFILE (1 OF 2)

Designed	PJC	Drawn	PJC	Checked	MJS	Date	06/13/2025

Job No.	43377
File Name	43377–s–et–prf001
Sheet No.	21 OF 77
Dwg. No.	ET–306

WIRE PARAMETERS			
WIRE	DESCRIPTION	LB/FT	TENSION
MESSENGER	5/8" COPPERWELD	0.85 LB/FT	4640 LB
AUXILIARY	4/0 COPPER GROOVED	0.64 LB/FT	1200 LB
CONTACT	4/0 BRONZE GROOVED	0.64 LB/FT	3500 LB
TOTAL SYSTEM WT INCLUDING HANGERS		2.21 LB/FT	

BILL OF MATERIALS – WR#1 (2 OF 2)				
ITEM	REF. DWG.	DESCRIPTION	UNIT	QTY.
H	ET–500	CONTACT – AUXILLARY WIRE CLIP	EA	44
J	ET–500	HANGER ASSEMBLY	EA	16
ME	ET–500	HANGER ASSEMBLY	EA	6

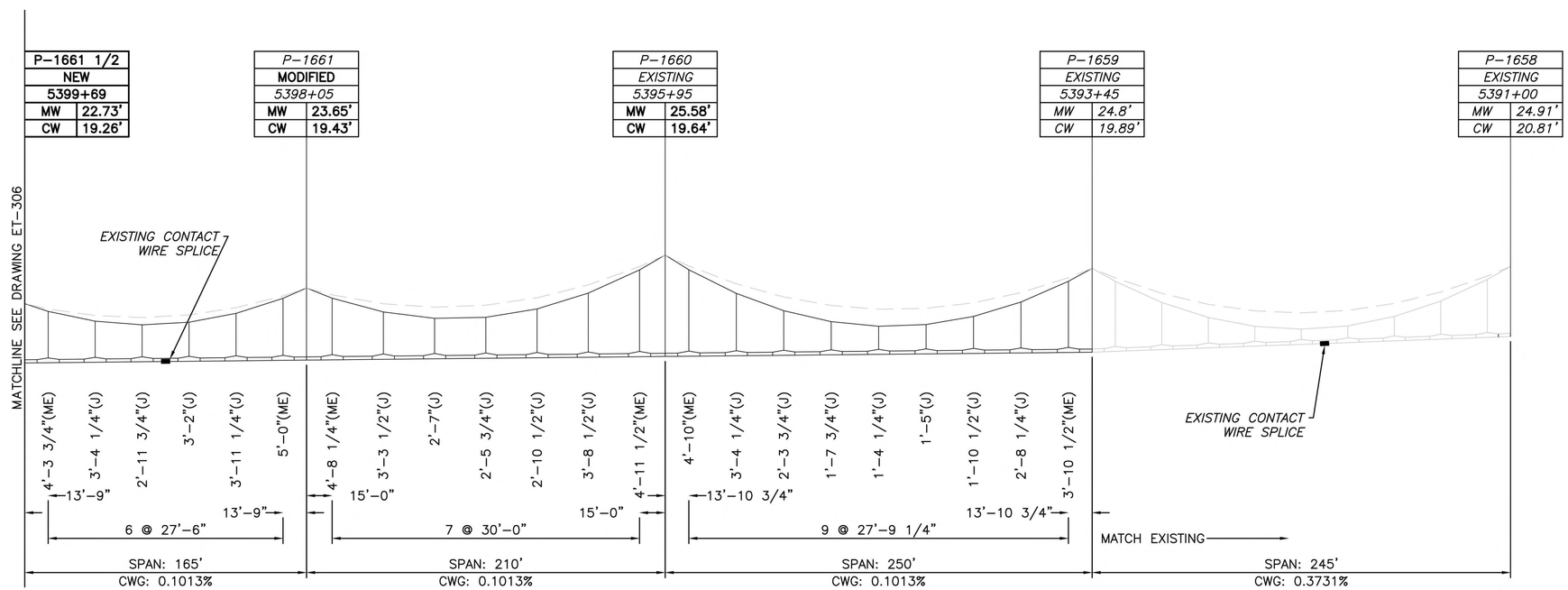

TRACK 2 PROPOSED PROFILE

NOTES:

1. FOR GENERAL NOTES AND DIVISION OF WORK SEE SHEET ET–002.
2. FOR LEGEND AND ABBREVIATIONS SEE SHEET ET–003.
3. FOR PROPOSED WIRING LAYOUT PLANS, SEE DRAWINGS ET–101
4. THE CATENARY WIRE PROFILE SHEETS ARE SHOWN FOR A 60°F TEMPERATURE/TENSION PROFILE CONDITION.
5. SPAN LENGTHS SHOWN ARE ACTUAL BASED ON SURVEY, WHILE STATIONING OF THE STRUCTURES COMES FROM AMTRAK AS–BUILT DRAWINGS. IN SOME CASES THE STATIONING MAY NOT REPRESENT THE PHYSICAL DISTANCE BETWEEN THE STRUCTURES.
6. THE HANGER SPACING AND CONTACT WIRE GRADIENT VALUES ARE CALCULATED USING ACTUAL MEASURED DISTANCE BETWEEN ADJACENT STRUCTURES SUPPORTING THE CATENARY SYSTEM.

SCALE:

1"=40'–0" HORIZONTAL

0 40'–0" 80'–0" 120'–0"

0 4'–0" 8'–0" 12'–0"

1"=4'–0" VERTICAL

PLOT SCALE: AS SHOWN 43377–s–et–prf001.dwg
6/12/2025 11:46:04 AM

No.	Revisions	Date	By

AMTRAK

Office of Engineering
Engineering Design
National Railroad Passenger Corporation
30th Street Station, Philadelphia, Pennsylvania 19104

Approved	Date

COMMONWEALTH OF PENNSYLVANIA REGISTERED PROFESSIONAL ENGINEER MATTHEW JOHN SCHREFFLER PE096328

HNTB
HNTB Corporation
1650 Arch Street, Suite 1700
Philadelphia, PA 19103
215–568–6500

KEYSTONE CORRIDOR
I–83 RECONSTRUCTION EARLY ACTION
ELECTRIC TRACTION

TRACK 2 PROPOSED OCS WIRE PROFILE (2 OF 2)

Designed	PJC	Drawn	PJC	Checked	MJS	Date	06/13/2025

Job No.	43377
File Name	43377–s–et–prf001
Sheet No.	22 OF 77
Dwg. No.	ET–307

WIRE PARAMETERS			
WIRE	DESCRIPTION	LB/FT	TENSION
FIBER OPTIC	ACS, AL TUBE	0.458 LB/FT	1031 LB
STATIC	9/16" COPPERWELD	0.70 LB/FT	1575 LB
TRANSMISSION	477 MCM ACSR	0.66 LB/FT	1476 LB

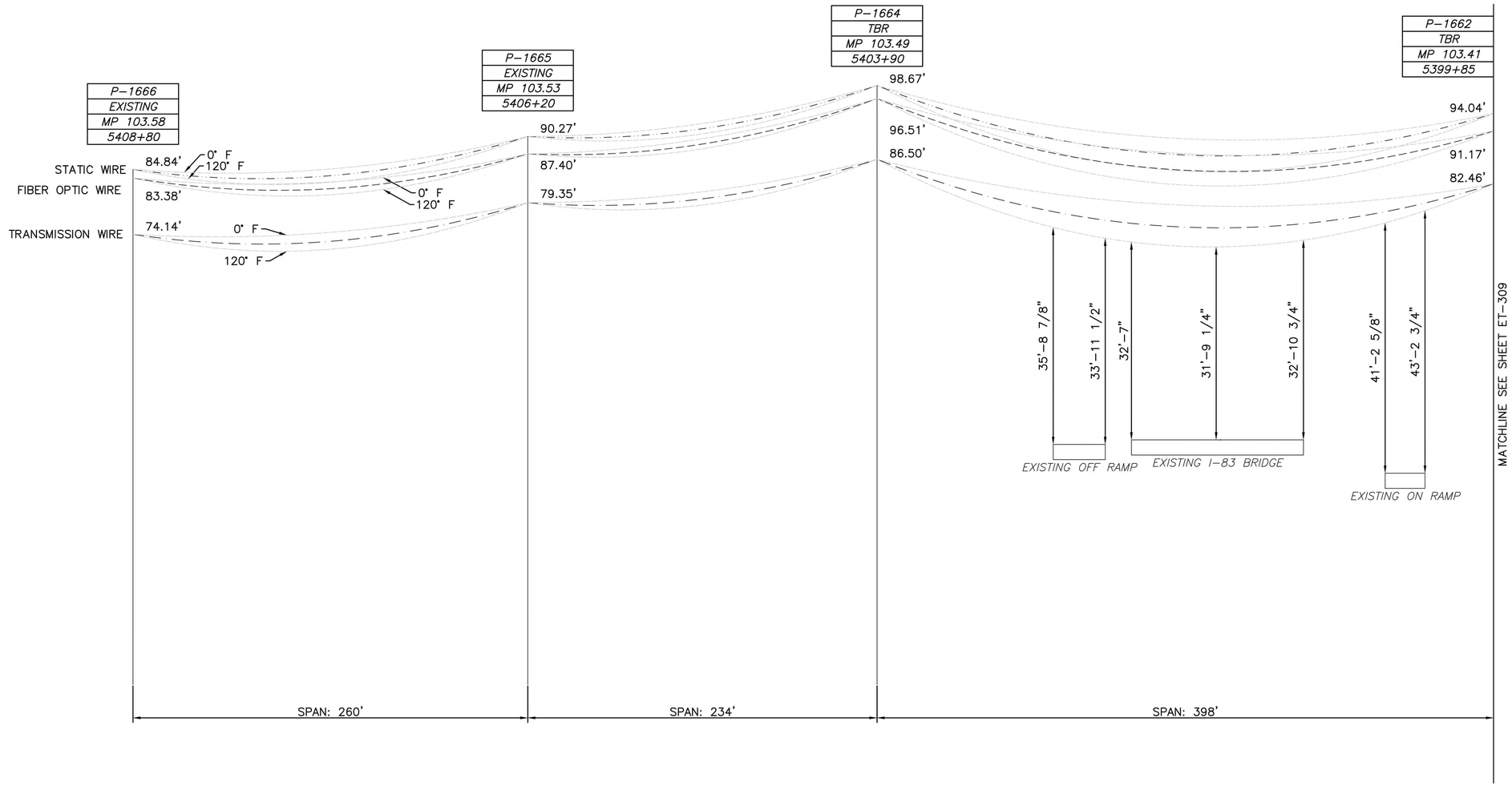

NOTES:

1. FOR GENERAL NOTES AND DIVISION OF WORK SEE SHEET ET-002.
2. FOR LEGEND AND ABBREVIATIONS SEE SHEET ET-003.
3. FOR PROPOSED ANCILLARY WIRING PLANS, SEE SHEET ET-103.
4. THE ANCILLARY WIRE PROFILE SHEETS ARE SHOWN FOR 0°F, 60°F, 120°F TEMPERATURE/TENSION PROFILE CONDITIONS.
5. SPAN LENGTHS SHOWN ARE ACTUAL BASED ON SURVEY, WHILE STATIONING OF THE STRUCTURES COMES FROM AMTRAK AS-BUILT DRAWINGS. IN SOME CASES THE STATIONING MAY NOT REPRESENT THE PHYSICAL DISTANCE BETWEEN THE STRUCTURES.
6. FOR SUPPORT ASSEMBLIES, SEE SHEETS ET-400 TO ET-414
7. EXISTING I-83 VIADUCT BRIDGE IS SHOWN TO ILLUSTRATE FINAL OCS MODIFICATION CONDITION PRE-BRIDGE REPLACEMENT. REFER TO OCS STAGING DRAWINGS ET-010 TO ET-012

EXISTING ANCILLARY WIRE NORTH COLUMN PROFILE

SCALE:

1"=40'-0" HORIZONTAL

0 40'-0" 80'-0" 120'-0"

0 10'-0" 20'-0" 30'-0"

1"=10'-0" VERTICAL

No.	Revisions	Date	By

AMTRAK

Office of Engineering
Engineering Design
National Railroad Passenger Corporation
30th Street Station, Philadelphia, Pennsylvania 19104

Approved	Date

COMMONWEALTH OF PENNSYLVANIA REGISTERED PROFESSIONAL MATTHEW JOHN SCHREFFLER ENGINEER PE096326

HNTB
HNTB Corporation
1650 Arch Street, Suite 1700
Philadelphia, PA 19103
215-568-6500

KEYSTONE CORRIDOR
I-83 RECONSTRUCTION EARLY ACTION
ELECTRIC TRACTION

EXISTING ANCILLARY WIRE PROFILE (1 OF 4)

Designed PJC | Drawn PJC | Checked MJS | Date 06/13/2025

Job No.	43377
File Name	43377-s-et-oprf001
Sheet No.	23 OF 77
Dwg. No.	ET-308

PLOT SCALE: AS SHOWN
6/10/2025 2:03:11 PM 43377-s-et-oprf001.dwg

WIRE PARAMETERS			
WIRE	DESCRIPTION	LB/FT	TENSION
STATIC	9/16" COPPERWELD	0.70 LB/FT	1575 LB
SIGNAL POWER	1/0 COPPER	0.33 LB/FT	735 LB
TRANSMISSION	477 MCM ACSR	0.66 LB/FT	1476 LB

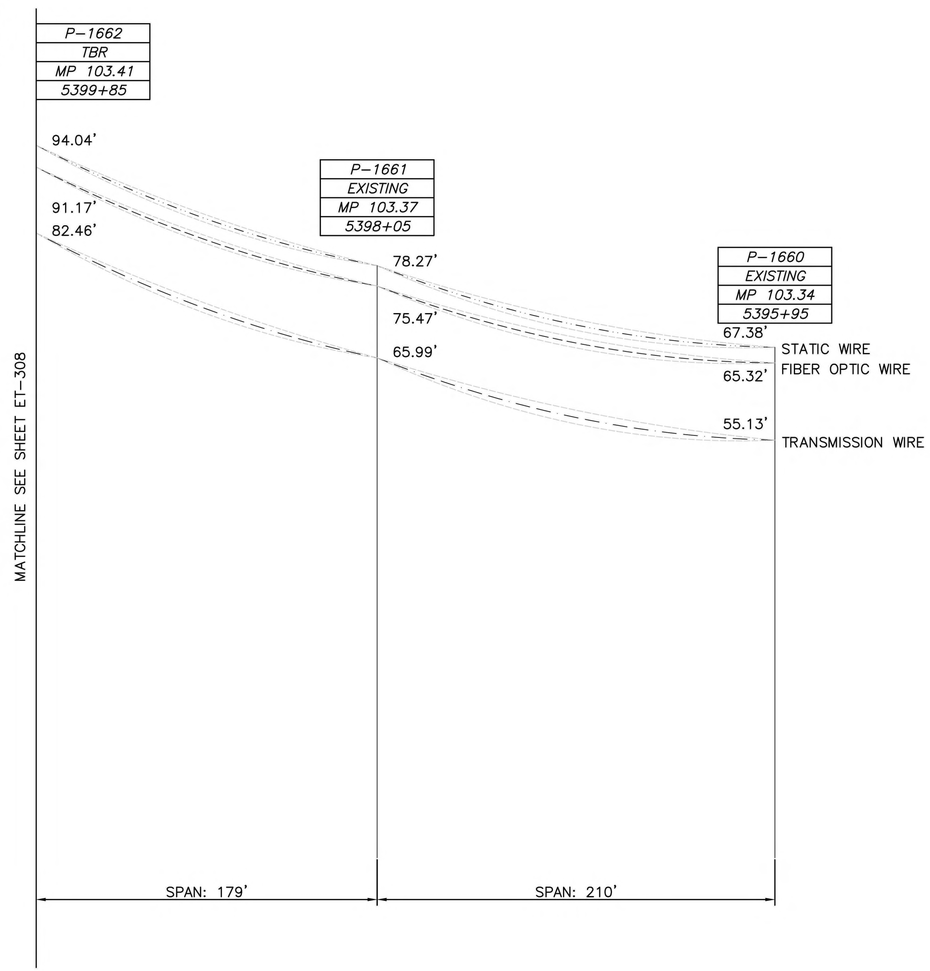

EXISTING ANCILLARY WIRE NORTH COLUMN PROFILE

NOTES:

1. FOR GENERAL NOTES AND DIVISION OF WORK SEE SHEET ET-002.
2. FOR LEGEND AND ABBREVIATIONS SEE SHEET ET-003.
3. FOR PROPOSED ANCILLARY WIRING PLANS, SEE SHEET ET-103.
4. THE ANCILLARY WIRE PROFILE SHEETS ARE SHOWN FOR 0°F, 60°F, 120°F TEMPERATURE/TENSION PROFILE CONDITIONS.
5. SPAN LENGTHS SHOWN ARE ACTUAL BASED ON SURVEY, WHILE STATIONING OF THE STRUCTURES COMES FROM AMTRAK AS-BUILT DRAWINGS. IN SOME CASES THE STATIONING MAY NOT REPRESENT THE PHYSICAL DISTANCE BETWEEN THE STRUCTURES.
6. FOR SUPPORT ASSEMBLIES, SEE SHEETS ET-400 TO ET-414
7. EXISTING I-83 VIADUCT BRIDGE IS SHOWN TO ILLUSTRATE FINAL OCS MODIFICATION CONDITION PRE-BRIDGE REPLACEMENT. REFER TO OCS STAGING DRAWINGS ET-010 TO ET-012

SCALE:

1"=40'-0" HORIZONTAL

0 40'-0" 80'-0" 120'-0"

0 10'-0" 20'-0" 30'-0"

1"=10'-0" VERTICAL

PLOT SCALE: AS SHOWN
6/10/2025 2:03:11 PM 43377-s-et-oprf001.dwg

No.	Revisions	Date	By

AMTRAK

Office of Engineering
Engineering Design
National Railroad Passenger Corporation
30th Street Station, Philadelphia, Pennsylvania 19104

Approved	Date

COMMONWEALTH OF PENNSYLVANIA REGISTERED PROFESSIONAL ENGINEER MATTHEW JOHN SCHROEFFLER PE096326

HNTB
HNTB Corporation
1650 Arch Street, Suite 1700
Philadelphia, PA 19103
215-568-6500

KEYSTONE CORRIDOR
I-83 RECONSTRUCTION EARLY ACTION
ELECTRIC TRACTION

EXISTING ANCILLARY WIRE PROFILE (2 OF 4)

Designed PJC Drawn PJC Checked MJS Date 06/13/2025

Job No. 43377
File Name 43377-s-et-oprf001
Sheet No. 24 OF 77
Dwg. No. ET-309

WIRE PARAMETERS			
WIRE	DESCRIPTION	LB/FT	TENSION
STATIC	9/16" COPPERWELD	0.70 LB/FT	1575 LB
SIGNAL POWER	1/0 COPPER	0.33 LB/FT	735 LB
TRANSMISSION	477 MCM ACSR	0.66 LB/FT	1476 LB

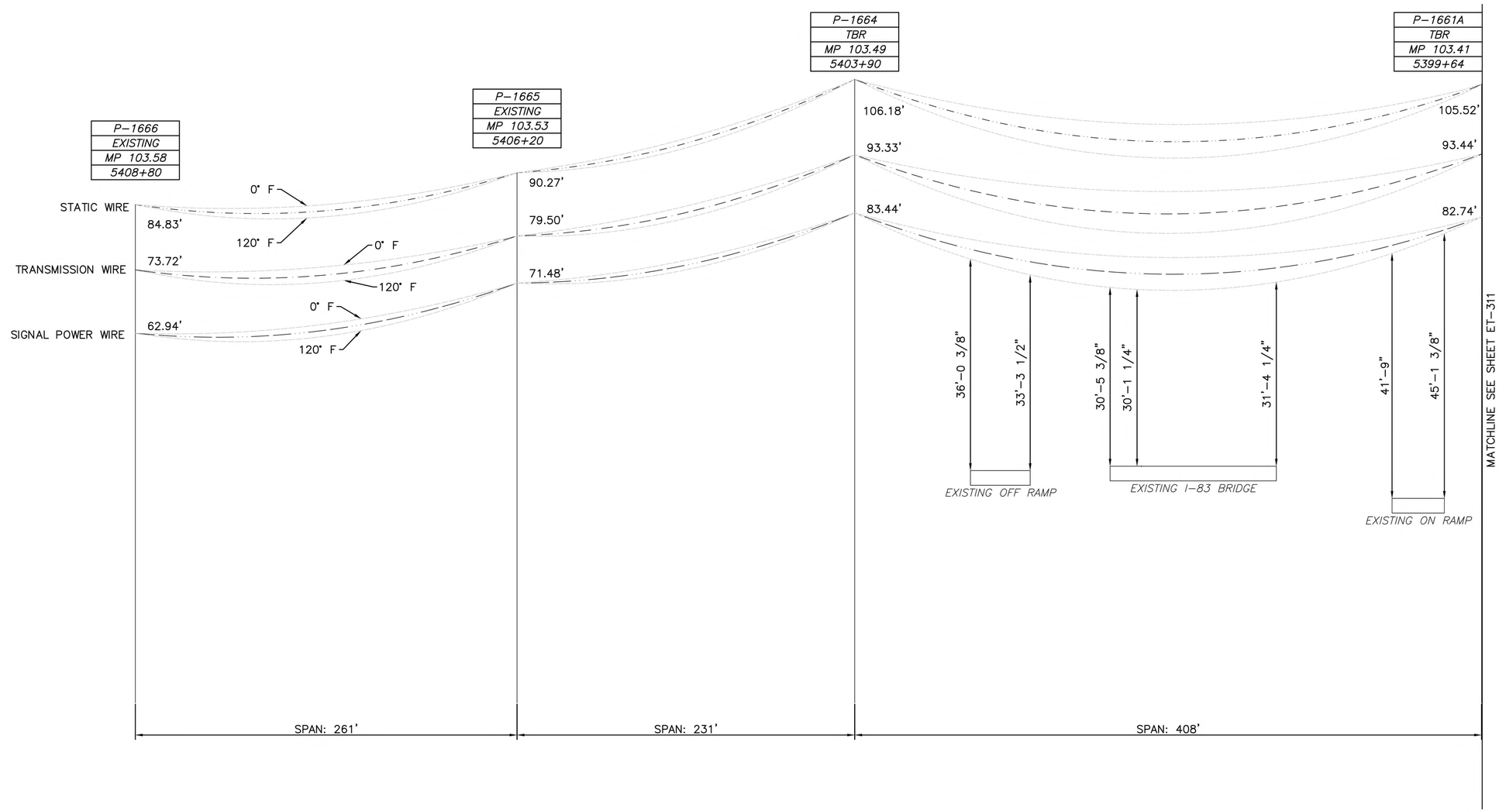

NOTES:

1. FOR GENERAL NOTES AND DIVISION OF WORK SEE SHEET ET-002.
2. FOR LEGEND AND ABBREVIATIONS SEE SHEET ET-003.
3. FOR PROPOSED ANCILLARY WIRING PLANS, SEE SHEET ET-103.
4. THE ANCILLARY WIRE PROFILE SHEETS ARE SHOWN FOR 0°F, 60°F, 120°F TEMPERATURE/TENSION PROFILE CONDITIONS.
5. SPAN LENGTHS SHOWN ARE ACTUAL BASED ON SURVEY, WHILE STATIONING OF THE STRUCTURES COMES FROM AMTRAK AS-BUILT DRAWINGS. IN SOME CASES THE STATIONING MAY NOT REPRESENT THE PHYSICAL DISTANCE BETWEEN THE STRUCTURES.
6. FOR SUPPORT ASSEMBLIES, SEE SHEETS ET-400 TO ET-414
7. EXISTING I-83 VIADUCT BRIDGE IS SHOWN TO ILLUSTRATE FINAL OCS MODIFICATION CONDITION PRE-BRIDGE REPLACEMENT. REFER TO OCS STAGING DRAWINGS ET-010 TO ET-012

EXISTING ANCILLARY WIRE SOUTH COLUMN PROFILE

SCALE:

1"=40'-0" HORIZONTAL

0 40'-0" 80'-0" 120'-0"

0 10'-0" 20'-0" 30'-0"

1"=10'-0" VERTICAL

No.	Revisions	Date	By

AMTRAK

Office of Engineering
Engineering Design
National Railroad Passenger Corporation
30th Street Station, Philadelphia, Pennsylvania 19104

Approved	Date

COMMONWEALTH OF PENNSYLVANIA REGISTERED PROFESSIONAL ENGINEER MATTHEW JOHN SCHREFFLER PE096326

HNTB

HNTB Corporation
1650 Arch Street, Suite 1700
Philadelphia, PA 19103
215-568-6500

KEYSTONE CORRIDOR
I-83 RECONSTRUCTION EARLY ACTION
ELECTRIC TRACTION

EXISTING ANCILLARY WIRE PROFILE (3 OF 4)

Designed PJC Drawn PJC Checked MJS Date 06/13/2025

Job No.	43377
File Name	43377-s-et-oprf001
Sheet No.	25 OF 77
Dwg. No.	ET-310

PLOT SCALE: AS SHOWN
6/10/2025 2:03:11 PM 43377-s-et-oprf001.dwg

WIRE PARAMETERS			
WIRE	DESCRIPTION	LB/FT	TENSION
FIBER OPTIC	ACS, AL TUBE	0.458 LB/FT	1031 LB
STATIC	9/16" COPPERWELD	0.70 LB/FT	1575 LB
TRANSMISSION	477 MCM ACSR	0.66 LB/FT	1476 LB

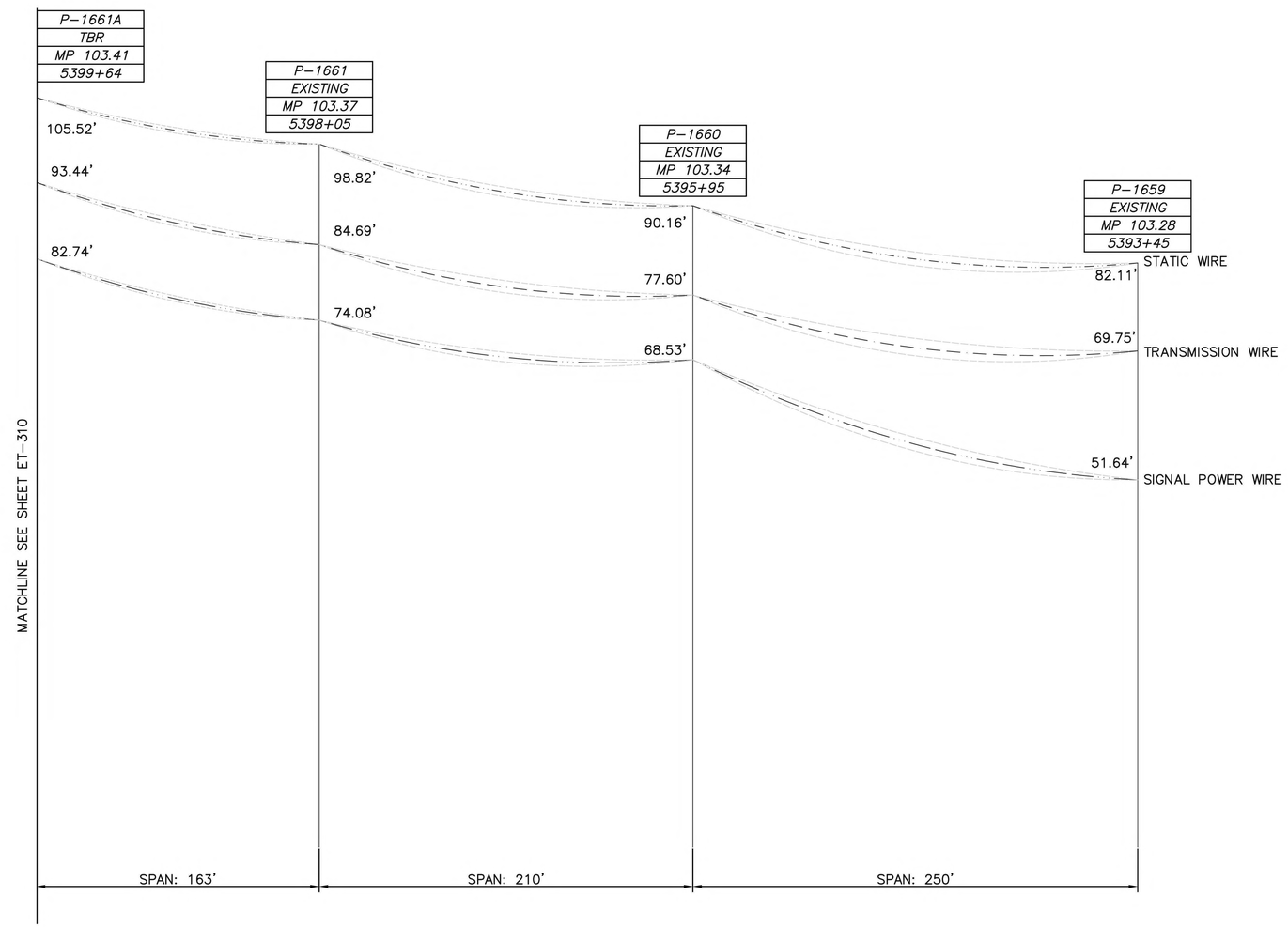

NOTES:

1. FOR GENERAL NOTES AND DIVISION OF WORK SEE SHEET ET–002.
2. FOR LEGEND AND ABBREVIATIONS SEE SHEET ET–003.
3. FOR PROPOSED ANCILLARY WIRING PLANS, SEE SHEET ET–103.
4. THE ANCILLARY WIRE PROFILE SHEETS ARE SHOWN FOR 0°F, 60°F, 120°F TEMPERATURE/TENSION PROFILE CONDITIONS.
5. SPAN LENGTHS SHOWN ARE ACTUAL BASED ON SURVEY, WHILE STATIONING OF THE STRUCTURES COMES FROM AMTRAK AS–BUILT DRAWINGS. IN SOME CASES THE STATIONING MAY NOT REPRESENT THE PHYSICAL DISTANCE BETWEEN THE STRUCTURES.
6. FOR SUPPORT ASSEMBLIES, SEE SHEETS ET–400 TO ET–414
7. EXISTING I–83 VIADUCT BRIDGE IS SHOWN TO ILLUSTRATE FINAL OCS MODIFICATION CONDITION PRE–BRIDGE REPLACEMENT. REFER TO OCS STAGING DRAWINGS ET–010 TO ET–012

EXISTING ANCILLARY WIRE SOUTH COLUMN PROFILE

SCALE:

1"=40'–0" HORIZONTAL

0 40'–0" 80'–0" 120'–0"

0 10'–0" 20'–0" 30'–0"

1"=10'–0" VERTICAL

No.	Revisions	Date	By

AMTRAK

Office of Engineering
Engineering Design
National Railroad Passenger Corporation
30th Street Station, Philadelphia, Pennsylvania 19104

Approved	Date

COMMONWEALTH OF PENNSYLVANIA REGISTERED PROFESSIONAL ENGINEER MATTHEW JOHN SCHROEFFLER PE096326

HNTB

HNTB Corporation
1650 Arch Street, Suite 1700
Philadelphia, PA 19103
215–568–6500

KEYSTONE CORRIDOR
I–83 RECONSTRUCTION EARLY ACTION
ELECTRIC TRACTION

EXISTING ANCILLARY WIRE PROFILE (4 OF 4)

Designed	PJC	Drawn	PJC	Checked	MJS	Date	06/13/2025

Job No.	43377
File Name	43377–s–et–oprf001
Sheet No.	26 OF 77
Dwg. No.	ET–311

PLOT SCALE: AS SHOWN
6/10/2025 2:03:11 PM 43377–s–et–oprf001.dwg

WIRE PARAMETERS			
WIRE	DESCRIPTION	LB/FT	TENSION
FIBER OPTIC	ACS, AL TUBE	0.458 LB/FT	1031 LB
STATIC	9/16" COPPERWELD	0.70 LB/FT	1575 LB
TRANSMISSION	477 MCM ACSR	0.66 LB/FT	1476 LB

BILL OF MATERIALS – ANCILLARY–NORTH (1 OF 2)				
ITEM	REF. DWG.	DESCRIPTION	UNIT	QTY.
9/16 GW	ET–004	9/16" DIA COPPERWELD	FT	647
9403 FET	ET–004	138KV TRANSMISSION WIRE	FT	1294
OPGW	ET–004	0.580" ACS/FIBER, FIBER OPTIC CABLE	FT	647

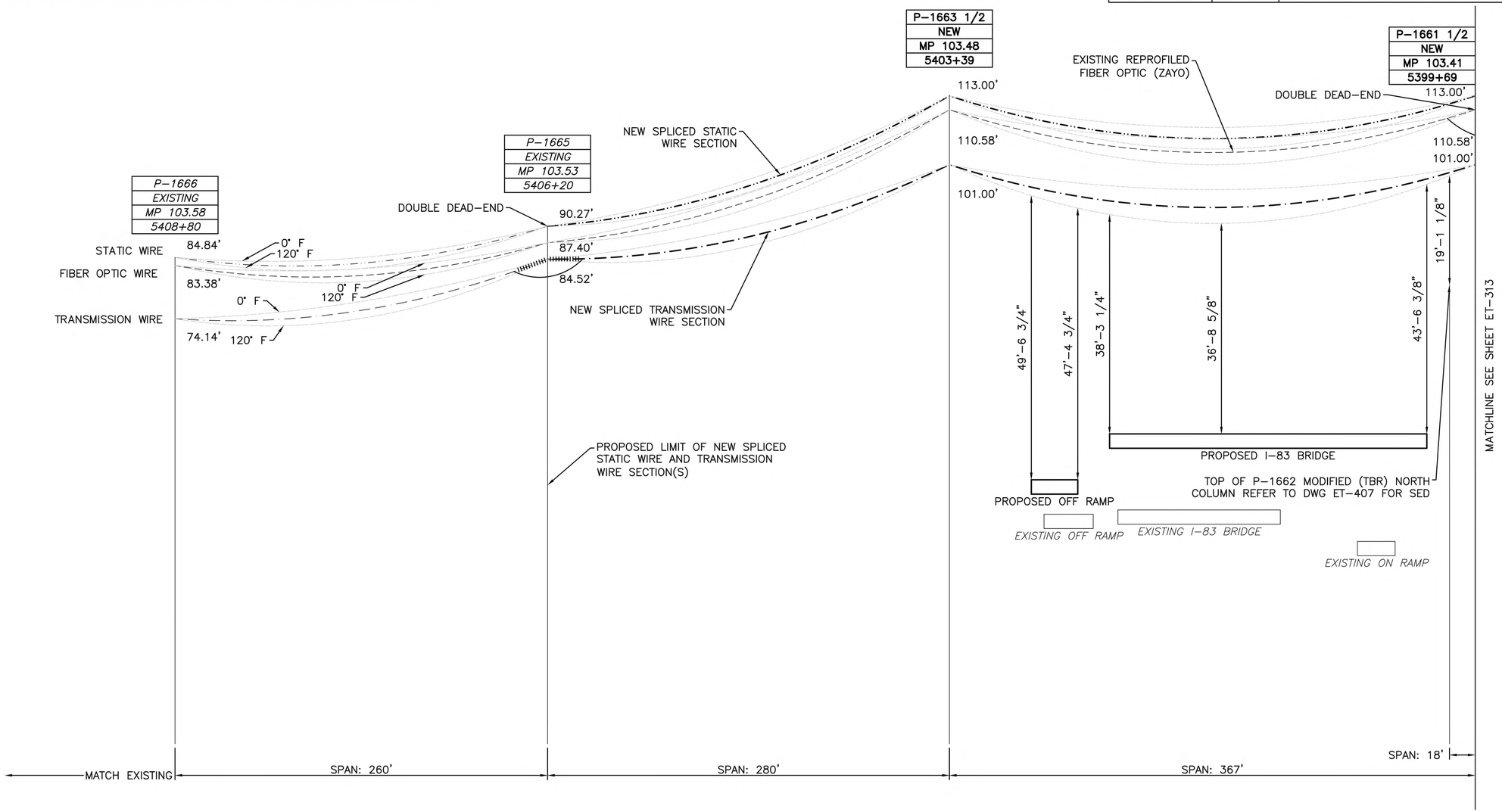

NOTES:

1. FOR GENERAL NOTES AND DIVISION OF WORK SEE SHEET ET–002.
2. FOR LEGEND AND ABBREVIATIONS SEE SHEET ET–003.
3. FOR PROPOSED ANCILLARY WIRING PLANS, SEE SHEET ET–103.
4. THE ANCILLARY WIRE PROFILE SHEETS ARE SHOWN FOR 0°F, 60°F, 120°F TEMPERATURE/TENSION PROFILE CONDITIONS.
5. SPAN LENGTHS SHOWN ARE ACTUAL BASED ON SURVEY, WHILE STATIONING OF THE STRUCTURES COMES FROM AMTRAK AS–BUILT DRAWINGS. IN SOME CASES THE STATIONING MAY NOT REPRESENT THE PHYSICAL DISTANCE BETWEEN THE STRUCTURES.
6. FOR SUPPORT ASSEMBLIES, SEE SHEETS ET–400 TO ET–414
7. EXISTING I–83 VIADUCT BRIDGE IS SHOWN TO ILLUSTRATE FINAL OCS MODIFICATION CONDITION PRE–BRIDGE REPLACEMENT. REFER TO OCS STAGING DRAWINGS ET–010 TO ET–012

PROPOSED ANCILLARY WIRE NORTH COLUMN PROFILE

SCALE:

1"=40'–0" HORIZONTAL

0 40'–0" 80'–0" 120'–0"

0 10'–0" 20'–0" 30'–0"

1"=10'–0" VERTICAL

No.	Revisions	Date	By

AMTRAK

Office of Engineering
Engineering Design
National Railroad Passenger Corporation
30th Street Station, Philadelphia, Pennsylvania 19104

Approved	Date

COMMONWEALTH OF PENNSYLVANIA REGISTERED PROFESSIONAL ENGINEER MATTHEW JOHN SCHREFFLER PE096328

HNTB

HNTB Corporation
1650 Arch Street, Suite 1700
Philadelphia, PA 19103
215–568–6500

KEYSTONE CORRIDOR
I–83 RECONSTRUCTION EARLY ACTION
ELECTRIC TRACTION

PROPOSED ANCILLARY WIRE PROFILE (1 OF 4)

Designed	PJC	Drawn	PJC	Checked	MJS	Date	06/13/2025

Job No.	43377
File Name	43377–s–et–oprf001
Sheet No.	27 OF 77
Dwg. No.	ET–312

PLOT SCALE: AS SHOWN
6/10/2025 2:03:11 PM 43377–s–et–oprf001.dwg

WIRE PARAMETERS			
WIRE	DESCRIPTION	LB/FT	TENSION
FIBER OPTIC	ACS, AL TUBE	0.458 LB/FT	1031 LB
STATIC	9/16" COPPERWELD	0.70 LB/FT	1575 LB
TRANSMISSION	477 MCM ACSR	0.66 LB/FT	1476 LB

BILL OF MATERIALS – ANCILLARY–NORTH (2 OF 2)				
ITEM	REF. DWG.	DESCRIPTION	UNIT	QTY.
9/16 GW	ET–004	9/16" DIA COPPERWELD	FT	163
9403 FET	ET–004	138KV TRANSMISSION WIRE	FT	326
OPGW	ET–004	0.580" ACS/FIBER, FIBER OPTIC CABLE	FT	200

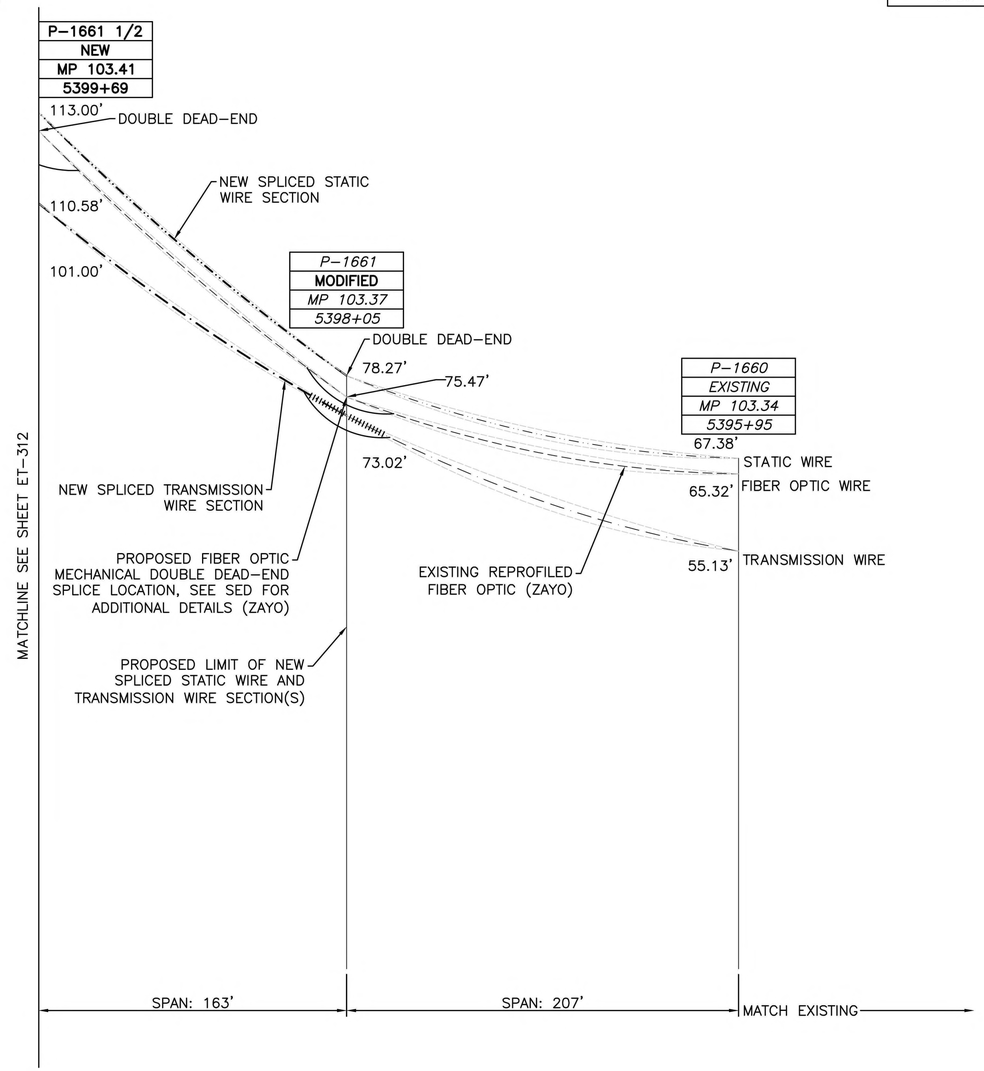

NOTES:

1. FOR GENERAL NOTES AND DIVISION OF WORK SEE SHEET ET–002.
2. FOR LEGEND AND ABBREVIATIONS SEE SHEET ET–003.
3. FOR PROPOSED ANCILLARY WIRING PLANS, SEE SHEET ET–103.
4. THE ANCILLARY WIRE PROFILE SHEETS ARE SHOWN FOR 0°F, 60°F, 120°F TEMPERATURE/TENSION PROFILE CONDITIONS.
5. SPAN LENGTHS SHOWN ARE ACTUAL BASED ON SURVEY, WHILE STATIONING OF THE STRUCTURES COMES FROM AMTRAK AS–BUILT DRAWINGS. IN SOME CASES THE STATIONING MAY NOT REPRESENT THE PHYSICAL DISTANCE BETWEEN THE STRUCTURES.
6. FOR SUPPORT ASSEMBLIES, SEE SHEETS ET–400 TO ET–414
7. EXISTING I–83 VIADUCT BRIDGE IS SHOWN TO ILLUSTRATE FINAL OCS MODIFICATION CONDITION PRE–BRIDGE REPLACEMENT. REFER TO OCS STAGING DRAWINGS ET–010 TO ET–012

PROPOSED ANCILLARY WIRE NORTH COLUMN PROFILE

SCALE:

1"=40'–0" HORIZONTAL

0 40'–0" 80'–0" 120'–0"

0 10'–0" 20'–0" 30'–0"

1"=10'–0" VERTICAL

No.	Revisions	Date	By

AMTRAK

Office of Engineering
Engineering Design
National Railroad Passenger Corporation
30th Street Station, Philadelphia, Pennsylvania 19104

Approved	Date

COMMONWEALTH OF PENNSYLVANIA REGISTERED PROFESSIONAL ENGINEER MATTHEW JOHN SCHREFFLER PE096326

HNTB
HNTB Corporation
1650 Arch Street, Suite 1700
Philadelphia, PA 19103
215–568–6500

KEYSTONE CORRIDOR
I–83 RECONSTRUCTION EARLY ACTION
ELECTRIC TRACTION

PROPOSED ANCILLARY WIRE PROFILE (2 OF 4)

Designed PJC Drawn PJC Checked MJS Date 06/13/2025

Job No.	43377
File Name	43377–s–et–aprf001
Sheet No.	28 OF 77
Dwg. No.	ET–313

PLOT SCALE: AS SHOWN
6/10/2025 2:03:11 PM
43377–s–et–aprf001.dwg

WIRE PARAMETERS			
WIRE	DESCRIPTION	LB/FT	TENSION
STATIC	9/16" COPPERWELD	0.70 LB/FT	1575 LB
SIGNAL POWER	1/0 COPPER	0.33 LB/FT	735 LB
TRANSMISSION	477 MCM ACSR	0.66 LB/FT	1476 LB

BILL OF MATERIALS – ANCILLARY–SOUTH (1 OF 2)				
ITEM	REF. DWG.	DESCRIPTION	UNIT	QTY.
1/0 SIGNAL	ET–004	1/0 AWG, H.D. COPPER, SIGNAL POWER CABLE	FT	1310
9/16 GW	ET–004	9/16" DIA COPPERWELD	FT	655
9403 FET	ET–004	138KV TRANSMISSION WIRE	FT	1310

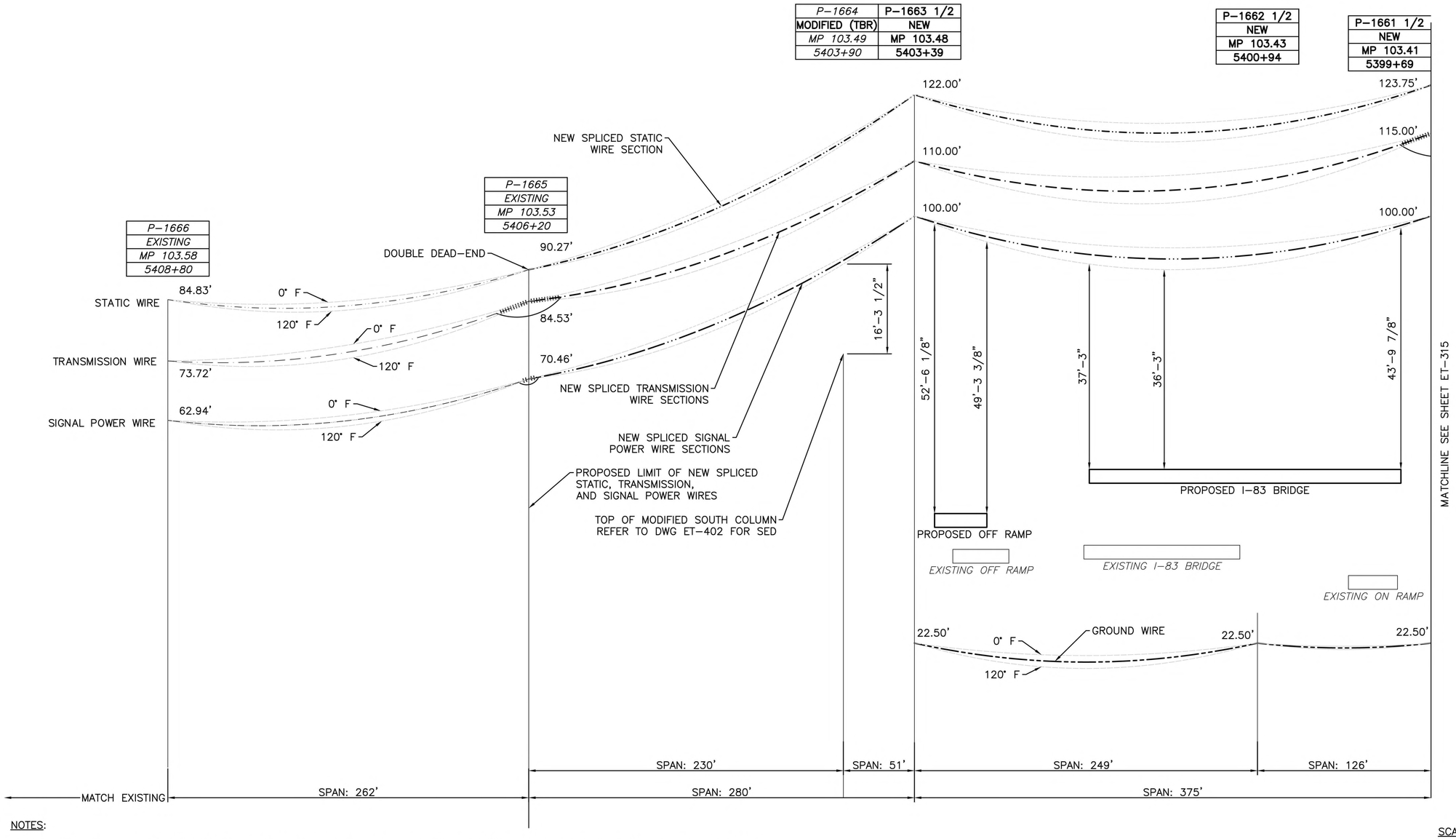

NOTES:

1. FOR GENERAL NOTES AND DIVISION OF WORK SEE SHEET ET–002.
2. FOR LEGEND AND ABBREVIATIONS SEE SHEET ET–003.
3. FOR PROPOSED ANCILLARY WIRING PLANS, SEE SHEET ET–103.
4. THE ANCILLARY WIRE PROFILE SHEETS ARE SHOWN FOR 0°F, 60°F, 120°F TEMPERATURE/TENSION PROFILE CONDITIONS.
5. SPAN LENGTHS SHOWN ARE ACTUAL BASED ON SURVEY, WHILE STATIONING OF THE STRUCTURES COMES FROM AMTRAK AS–BUILT DRAWINGS. IN SOME CASES THE STATIONING MAY NOT REPRESENT THE PHYSICAL DISTANCE BETWEEN THE STRUCTURES.
6. FOR SUPPORT ASSEMBLIES, SEE SHEETS ET–400 TO ET–414
7. EXISTING I–83 VIADUCT BRIDGE IS SHOWN TO ILLUSTRATE FINAL OCS MODIFICATION CONDITION PRE–BRIDGE REPLACEMENT. REFER TO OCS STAGING DRAWINGS ET–010 TO ET–012

PROPOSED ANCILLARY WIRE SOUTH COLUMN PROFILE

SCALE:

1"=40'–0" HORIZONTAL

0 40'–0" 80'–0" 120'–0"

0 10'–0" 20'–0" 30'–0"

1"=10'–0" VERTICAL

No.	Revisions	Date	By

AMTRAK

Office of Engineering
Engineering Design
National Railroad Passenger Corporation
30th Street Station, Philadelphia, Pennsylvania 19104

Approved	Date

COMMONWEALTH OF PENNSYLVANIA REGISTERED PROFESSIONAL ENGINEER MATTHEW JOHN SCHREFFLER PE096326

HNTB
HNTB Corporation
1650 Arch Street, Suite 1700
Philadelphia, PA 19103
215–568–6500

KEYSTONE CORRIDOR
I–83 RECONSTRUCTION EARLY ACTION
ELECTRIC TRACTION

PROPOSED ANCILLARY WIRE PROFILE (3 OF 4)

Designed	PJC	Drawn	PJC	Checked	MJS	Date	06/13/2025

Job No.	43377
File Name	43377–s–et–oprf001
Sheet No.	29 OF 77
Dwg. No.	ET–314

PLOT SCALE: AS SHOWN
6/10/2025 2:03:11 PM 43377–s–et–oprf001.dwg

WIRE PARAMETERS			
WIRE	DESCRIPTION	LB/FT	TENSION
STATIC	9/16" COPPERWELD	0.70 LB/FT	1575 LB
SIGNAL POWER	1/0 COPPER	0.33 LB/FT	735 LB
TRANSMISSION	477 MCM ACSR	0.66 LB/FT	1476 LB

BILL OF MATERIALS – ANCILLARY–SOUTH (2 OF 2)				
ITEM	REF. DWG.	DESCRIPTION	UNIT	QTY.
1/0 SIGNAL	ET–004	1/0 AWG, H.D. COPPER, SIGNAL POWER CABLE	FT	764
9/16 GW	ET–004	9/16" DIA COPPERWELD	FT	382
9403 FET	ET–004	138KV TRANSMISSION WIRE	FT	764

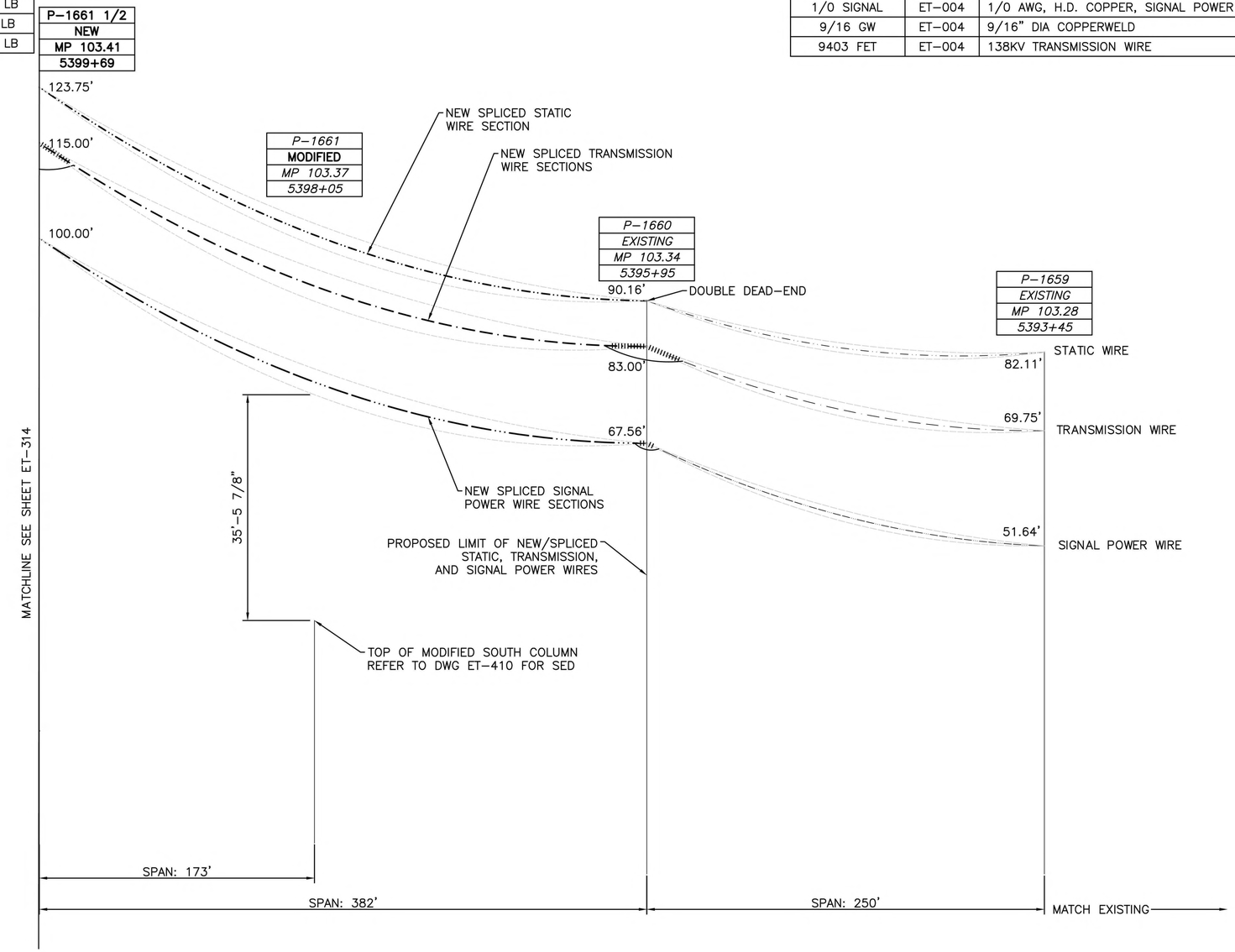

NOTES:

1. FOR GENERAL NOTES AND DIVISION OF WORK SEE SHEET ET–002.
2. FOR LEGEND AND ABBREVIATIONS SEE SHEET ET–003.
3. FOR PROPOSED ANCILLARY WIRING PLANS, SEE SHEET ET–103.
4. THE ANCILLARY WIRE PROFILE SHEETS ARE SHOWN FOR 0°F, 60°F, 120°F TEMPERATURE/TENSION PROFILE CONDITIONS.
5. SPAN LENGTHS SHOWN ARE ACTUAL BASED ON SURVEY, WHILE STATIONING OF THE STRUCTURES COMES FROM AMTRAK AS–BUILT DRAWINGS. IN SOME CASES THE STATIONING MAY NOT REPRESENT THE PHYSICAL DISTANCE BETWEEN THE STRUCTURES.
6. FOR SUPPORT ASSEMBLIES, SEE SHEETS ET–400 TO ET–414
7. EXISTING I–83 VIADUCT BRIDGE IS SHOWN TO ILLUSTRATE FINAL OCS MODIFICATION CONDITION PRE–BRIDGE REPLACEMENT. REFER TO OCS STAGING DRAWINGS ET–010 TO ET–012

PROPOSED ANCILLARY WIRE SOUTH COLUMN PROFILE

SCALE:

1"=40'–0" HORIZONTAL

0 40'–0" 80'–0" 120'–0"

0 10'–0" 20'–0" 30'–0"

1"=10'–0" VERTICAL

No.	Revisions	Date	By

AMTRAK

Office of Engineering
Engineering Design
National Railroad Passenger Corporation
30th Street Station, Philadelphia, Pennsylvania 19104

Approved	Date

COMMONWEALTH OF PENNSYLVANIA REGISTERED PROFESSIONAL ENGINEER MATTHEW JOHN SCHREFFLER PE096328

HNTB
HNTB Corporation
1650 Arch Street, Suite 1700
Philadelphia, PA 19103
215–568–6500

KEYSTONE CORRIDOR
I–83 RECONSTRUCTION EARLY ACTION
ELECTRIC TRACTION

PROPOSED ANCILLARY WIRE PROFILE (4 OF 4)

Designed	PJC	Drawn	PJC	Checked	MJS	Date	06/13/2025

Job No.	43377
File Name	43377–s–et–oprf001
Sheet No.	30 OF 77
Dwg. No.	ET–315

PLOT SCALE: AS SHOWN
6/10/2025 2:03:11 PM
43377–s–et–oprf001.dwg

WIRE HEIGHTS				
DESCRIPTION	SOUTH COLUMN	WIRE RUN #1	WIRE RUN #2	NORTH COLUMN
STATIC	84'–10" (EX.)	–	–	84'–10" (EX.)
FIBER OPTIC	–	–	–	83'–4 1/2" (EX.)
TRANSMISSION	73'–8 3/4" (EX.)	–	–	74'–1 3/4" (EX.)
SIGNAL	62'–11 1/4"(EX.)	–	–	–
MESSENGER	–	23'–6" (EX.)	23'–6" (EX.)	–
CONTACT	–	18'–6" (EX.)	18'–6" (EX.)	–

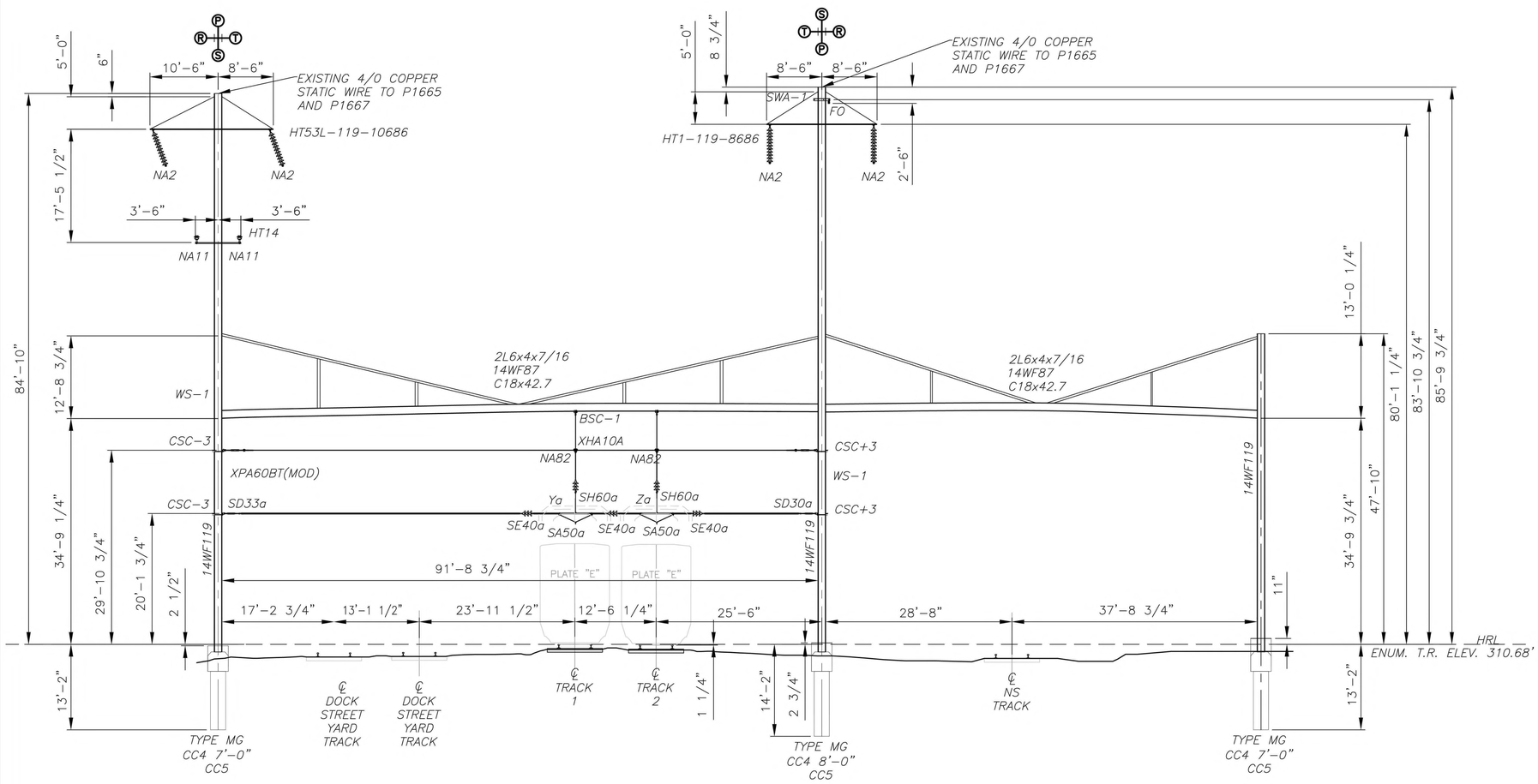

STRUCTURE P–1666

(LOOKING TOWARD HARRISBURG)
STATION: 5408+80
SCALE 1"=10'–0"

NOTES:

1. SEE DRAWINGS ET–001 FOR GENERAL NOTES. SEE ET–002 ABBREVIATIONS, RESPECTIVELY.
2. THIS SED HAS BEEN DEVELOPED BASED ON FINAL DESIGN DRAWINGS FOR THE STATE INTERLOCKING PROJECT (HNTB, 2013.)

STATEMENT OF WORK:

1. SHOWN FOR INFO ONLY. NO WORK TO BE DONE ON THIS STRUCTURE.

0'–0" 10'–0" 20'–0" 30'–0"
SCALE: 1"=10'

No.	Revisions	Date	By

AMTRAK

Office of Engineering
Engineering Design
National Railroad Passenger Corporation
30th Street Station, Philadelphia, Pennsylvania 19104

Approved	Date

COMMONWEALTH OF PENNSYLVANIA REGISTERED PROFESSIONAL ENGINEER MATTHEW JOHN SCHREFFLER PE096326

HNTB
HNTB Corporation
1650 Arch Street, Suite 1700
Philadelphia, PA 19103
215–568–6500

KEYSTONE CORRIDOR
I–83 RECONSTRUCTION EARLY ACTION
ELECTRIC TRACTION

ERECTION DIAGRAM P–1666 (EXISTING)

Designed PJC | Drawn PJC | Checked MJS | Date 06/13/2025

Job No. 43377
File Name 43377–S–ET–SED001
Sheet No. 31 OF 77
Dwg. No. ET–400

PLOT SCALE: AS SHOWN
9/6/2024 1:39:33 PM
43377–s–et–SED001.dwg

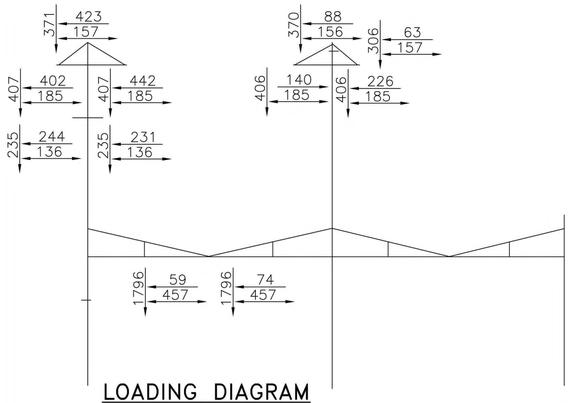

LOADING DIAGRAM

WIRE HEIGHTS

DESCRIPTION	SOUTH COLUMN	WIRE RUN #1	WIRE RUN #2	NORTH COLUMN
STATIC	90'–3 1/4" (EX.)	–	–	90'–3 1/4" (EX.)
FIBER OPTIC	–	–	–	87'–4 3/4" (EX.)
TRANSMISSION	84'–6 1/4"	–	–	84'–6 1/4"
SIGNAL	70'– 5 1/2"	–	–	–
MESSENGER	–	24'–0" (EX.)	24'–0" (EX.)	–
CONTACT	–	18'–10 3/4" (EX.)	18'–7 1/4" (EX.)	–

BILL OF MATERIALS

ITEM	REF. DWG.	DESCRIPTION	UNIT	QTY
GWD–4	ET–507	STATIC WIRE DOUBLE DEAD END ASSEMBLY	EA	2
HT–2	ET–608	TRANSMISSION CROSSARM	EA	1
NA12	ET–505	SIGNAL POWER DOUBLE DEAD END ASSEMBLY	EA	2
PC–1A	ET–614	POLE CLAMP	EA	2
SP–2	ET–609	SIGNAL POWER CROSSARM	EA	1
TDA–477A	ET–504	TRANSMISSION DEAD END ASSEMBLY	EA	4

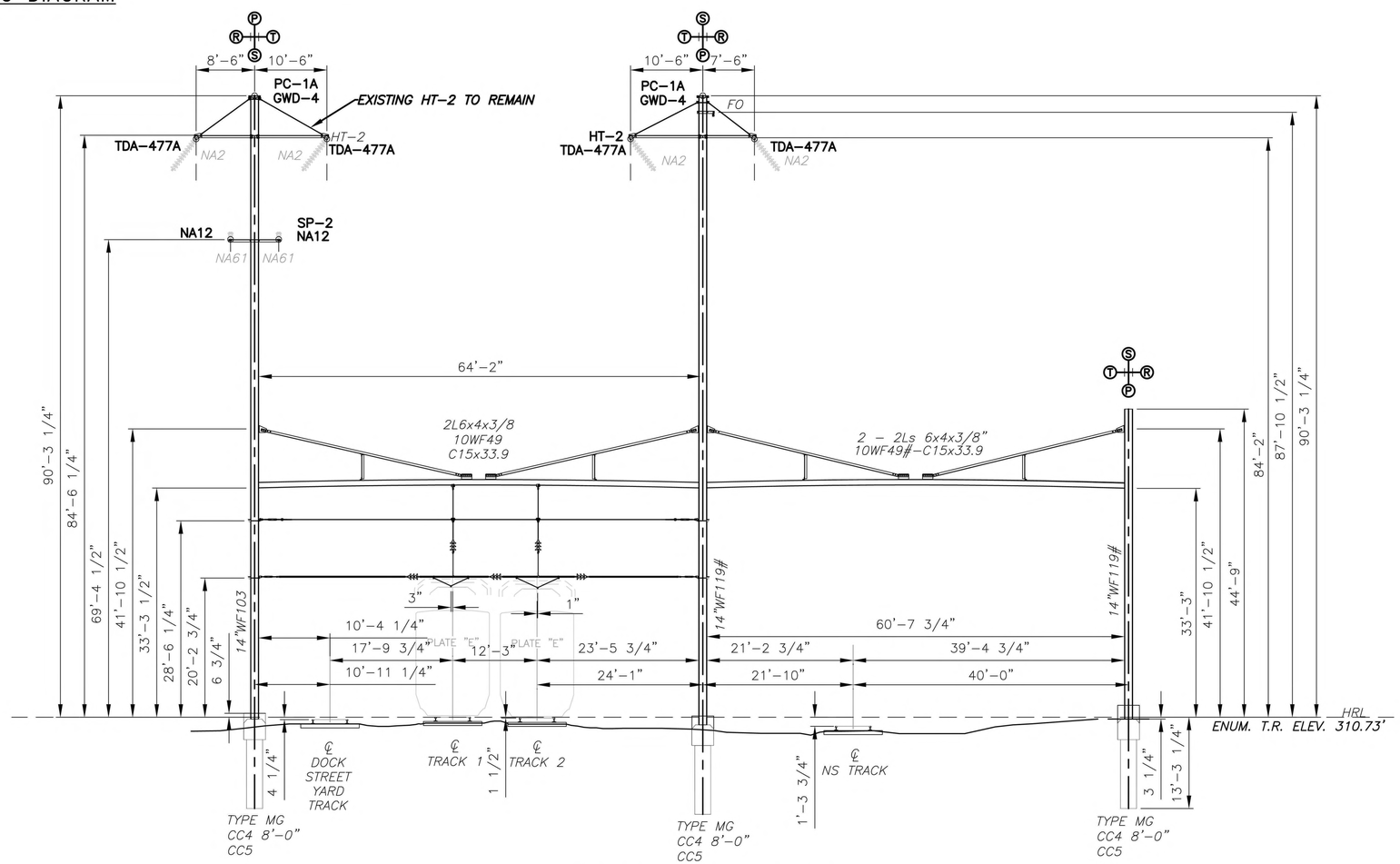

STRUCTURE P–1665

(LOOKING TOWARD HARRISBURG)
STATION: 5406+20
SCALE 1"=10'–0"

NOTES:

1. SEE DRAWING ET–002 FOR OCS GENERAL NOTES. SEE DRAWING ET–003 FOR LEGEND AND ABBREVIATIONS.
2. THIS SED HAS BEEN DEVELOPED BASED ON FINAL DESIGN DRAWINGS FOR THE STATE INTERLOCKING PROJECT (HNTB, 2013.)

STATEMENT OF WORK;

1. REMOVE EXISTING STATIC WIRE SUPPORT ASSEMBLIES. TERMINATE EXISTING STATIC WIRE AND RUN NEW STATIC WIRE IN THE SPAN AHEAD.
2. REMOVE EXISTING TRANSMISSION WIRE SUPPORT ASSEMBLIES. INSTALL DEAD–END TRANSMISSION ASSEMBLY AND TERMINATE EXISTING TRANSMISSION WIRE ON IT. RUN NEW TRANSMISSION WIRE IN THE SPAN AHEAD.
3. REMOVE EXISTING SIGNAL WIRE CROSSARM ASSEMBLY. INSTALL DEAD–END SIGNAL POWER CROSSARM ASSEMBLY AND TERMINATE EXISTING SIGNAL WIRE ON IT. RUN NEW SIGNAL WIRE IN THE SPAN AHEAD.
4. RE–PROFILE TRANSMISSION, SIGNAL, AND STATIC WIRES IN THE SPAN BETWEEN P–1665 AND P–1666.

0'–0" 10'–0" 20'–0" 30'–0"
SCALE: 1"=10'

No.	Revisions	Date	By

AMTRAK

Office of Engineering
Engineering Design
National Railroad Passenger Corporation
30th Street Station, Philadelphia, Pennsylvania 19104

Approved	Date

COMMONWEALTH OF PENNSYLVANIA
REGISTERED PROFESSIONAL
MATTHEW JOHN SCHREFFLER
ENGINEER
PE096326

HNTB
HNTB Corporation
1650 Arch Street, Suite 1700
Philadelphia, PA 19103
215–568–6500

KEYSTONE CORRIDOR
I–83 RECONSTRUCTION EARLY ACTION
ELECTRIC TRACTION

ERECTION DIAGRAM P–1665 (EXISTING)

Designed PJC | Drawn PJC | Checked MJS | Date 06/13/2025

Job No. 43377
File Name 43377–S–ET–SED002
Sheet No. 32 OF 77
Dwg. No. ET–401

PLOT SCALE: AS SHOWN
9/8/2024 1:41:46 PM
43377–s–et–SED002.dwg

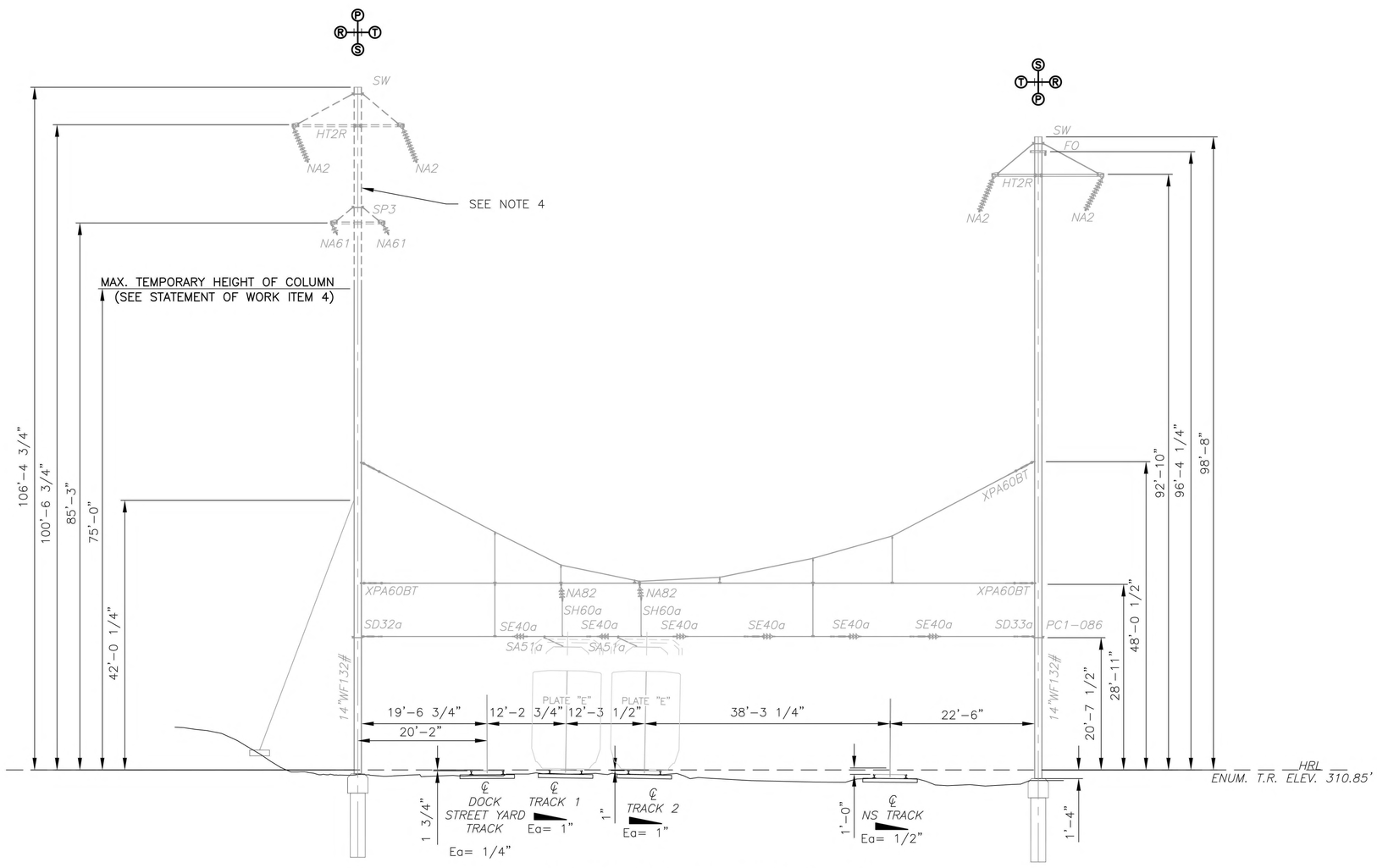

STRUCTURE P-1664 (TBR)

(LOOKING TOWARD HARRISBURG)
STATION: 5403+90
SCALE 1"=10'-0"

NOTES:

1. SEE DRAWING ET-002 FOR OCS GENERAL NOTES. SEE DRAWING ET-003 FOR LEGEND AND ABBREVIATIONS.
2. THIS DRAWING IS DRAWN FROM LIDAR DATA.

STATEMENT OF WORK:

1. REMOVE EXISTING OCS SUPPORT/REGISTRATION ASSEMBLIES DURING WIRE RUN #1 REPROFILE.
2. REMOVE EXISTING OCS SUPPORT/REGISTRATION ASSEMBLIES DURING WIRE RUN #2 REPROFILE.
3. REMOVE ANCILLARY WIRE SUPPORTS ON NORTH COLUMN.
4. REMOVE ANCILLARY WIRE SUPPORTS ON SOUTH COLUMN AND CUT EXISTING SOUTH COLUMN TO 75'-0" MAXIMUM ABOVE HRL DURING PHASE 3, STAGE 2.
5. REMOVE EXISTING STRUCTURE.
6. REMOVE FOUNDATION TO 24" BELOW GRADE.

0'-0" 10'-0" 20'-0" 30'-0"
SCALE: 1"=10'

No.	Revisions	Date	By

AMTRAK

Office of Engineering
Engineering Design
National Railroad Passenger Corporation
30th Street Station, Philadelphia, Pennsylvania 19104

Approved	Date

COMMONWEALTH OF PENNSYLVANIA
REGISTERED PROFESSIONAL
MATTHEW JOHN SCHREFFLER
ENGINEER
PE096326

HNTB
HNTB Corporation
1650 Arch Street, Suite 1700
Philadelphia, PA 19103
215-568-6500

KEYSTONE CORRIDOR
I-83 RECONSTRUCTION EARLY ACTION
ELECTRIC TRACTION

ERECTION DIAGRAM P-1664 (EXISTING TBR)

Designed	PJC	Drawn	PJC	Checked	MJS	Date	06/13/2025

Job No.	43377
File Name	43377-S-ET-SED003
Sheet No.	33 OF 77
Dwg. No.	ET-402

PLOT SCALE: AS SHOWN
6/11/2025 12:50:11 PM
43377-s-et-SED003.dwg

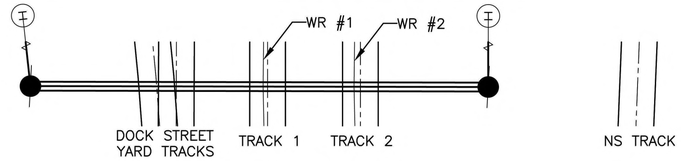

PLAN VIEW

SCALE 1"=10'-0"

WIRE HEIGHTS

DESCRIPTION	SOUTH COLUMN	WIRE RUN #1	WIRE RUN #2	NORTH COLUMN
STATIC	122'-0"	–	–	113'-0"
FIBER OPTIC	–	–	–	110'-7"
TRANSMISSION	110'-0"	–	–	101'-0"
SIGNAL	100'-0"	–	–	–
GROUND	22'-6"	–	–	–
MESSENGER	–	25'-8 3/4"	25'-8 3/4"	–
CONTACT	–	19'-2 1/4"	18'-10 3/4"	–

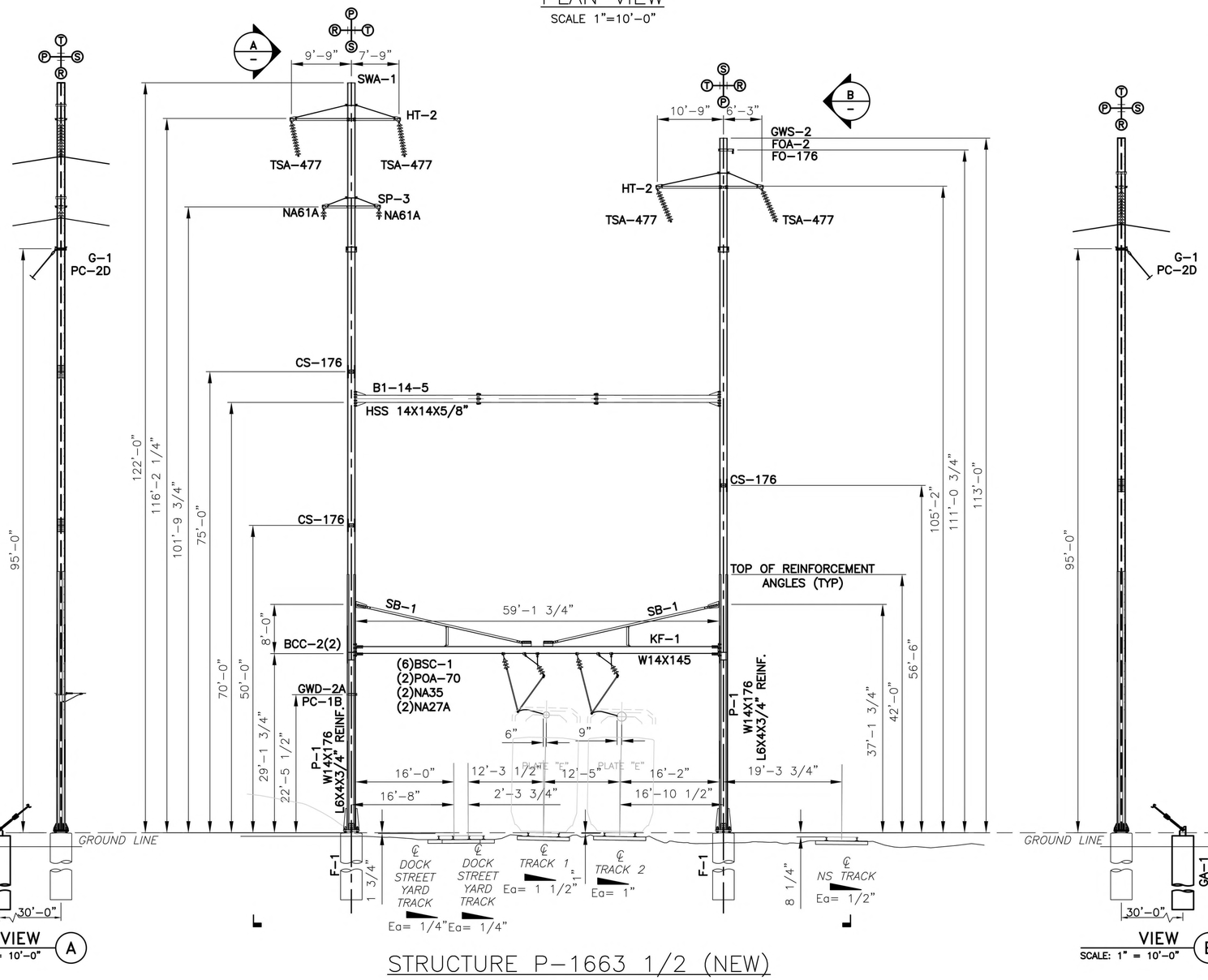

VIEW A

SCALE: 1" = 10'-0"

VIEW B

SCALE: 1" = 10'-0"

STRUCTURE P-1663 1/2 (NEW)

(LOOKING TOWARD HARRISBURG)

STATION: 5403+39

SCALE 1"=10'-0"

NOTES:

1. SEE DRAWING ET-002 FOR OCS GENERAL NOTES. SEE DRAWING ET-003 FOR LEGEND AND ABBREVIATIONS.
2. FOUNDATION DETAIL CAN BE FOUND ON DRAWINGS ET-616. FOUNDATION SCHEDULE CAN BE FOUND ON DRAWING ET-619.
3. LOADING DIAGRAM, BOM, AND VARIABLE DIMENSIONS TABLE CAN BE FOUND ON SHEET ET-404.

STATEMENT OF WORK:

1. INSTALL NEW COLUMN FOUNDATIONS AND DOWN GUY FOUNDATIONS.
2. INSTALL NEW NORTH COLUMN COMPLETELY. INSTALL (2) NEW SECTIONS OF SOUTH COLUMN ONLY BELOW SECOND SPLICE POINT (75'-0" ABOVE HRL).
3. INSTALL NEW DEAD END FOR GROUND WIRE ON SOUTH COLUMN. ATTACH NEW GROUND WIRE.
4. DURING NIGHT OUTAGE OF OCS POWER, INSTALL NEW K-FRAME CROSSBEAM, LATERAL SUPPORT CROSSBEAM AND NORTH COLUMN DOWN GUY ASSEMBLY.
5. DURING TRACK #1 OUTAGE, INSTALL NEW OCS SUPPORT/REGISTRATION ASSEMBLIES AND REPROFILE WIRE RUN #1 BETWEEN STRUCTURES P-1666 AND P-1659.
6. DURING TRACK #2 OUTAGE, INSTALL NEW OCS SUPPORT/REGISTRATION ASSEMBLIES AND REPROFILE WIRE RUN #2 BETWEEN STRUCTURES P-1666 AND P-1659.
7. DURING A TRANSMISSION OUTAGE (NORTH POLE LINE CIRCUIT ONLY). INSTALL STATIC WIRE ASSEMBLY, FIBER OPTIC ASSEMBLY, AND TRANSMISSION CROSS ARMS. ATTACH NEW STATIC WIRE, FIBER OPTIC, AND TRANSMISSION WIRE TO NEW SUPPORT ASSEMBLIES.
8. DURING A TRANSMISSION (SOUTH POLE LINE CIRCUIT ONLY) AND SIGNAL POWER OUTAGE, INSTALL TOP SECTION OF SOUTH COLUMN AND NEW DOWN GUY ASSEMBLY ON SOUTH COLUMN. INSTALL STATIC WIRE ASSEMBLY, TRANSMISSION AND SIGNAL POWER CROSS ARMS. ATTACH NEW STATIC WIRE, TRANSMISSION WIRE, AND SIGNAL POWER WIRE TO NEW SUPPORT ASSEMBLIES.

0'-0" 10'-0" 20'-0" 30'-0"

SCALE: 1"=10'

No.	Revisions	Date	By

AMTRAK

Office of Engineering
Engineering Design
National Railroad Passenger Corporation
30th Street Station, Philadelphia, Pennsylvania 19104

Approved	Date

COMMONWEALTH OF PENNSYLVANIA REGISTERED PROFESSIONAL ENGINEER MATTHEW JOHN SCHREFFLER PE096326

HNTB

HNTB Corporation
1650 Arch Street, Suite 1700
Philadelphia, PA 19103
215-568-6500

KEYSTONE CORRIDOR
I-83 RECONSTRUCTION EARLY ACTION
ELECTRIC TRACTION

ERECTION DIAGRAM P-1663 1/2 (PROPOSED) (1 OF 2)

Designed	Drawn	Checked	Date
PJC	PJC	MJS	06/13/2025

Job No.	43377
File Name	43377-S-ET-SED004
Sheet No.	34 OF 77
Dwg. No.	ET-403

PLOT SCALE: AS SHOWN
6/11/2025 12:49:24 PM
43377-s-et-SED004.dwg

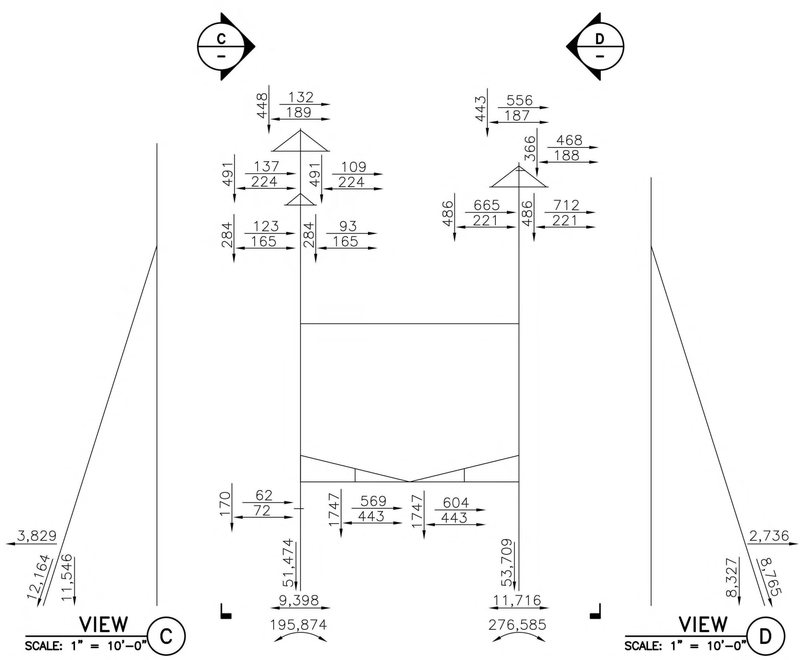

STRUCTURE P-1663 1/2 (NEW)
LOADING DIAGRAM

(LOOKING TOWARD HARRISBURG)
STATION: 5403+39

BILL OF MATERIALS

ITEM	REF. DWG.	DESCRIPTION	UNIT	QTY
B1-14-5	ET-604	CROSSBEAM LATERAL SUPPORT – HSS14X14X5/8	EA	1
BSC-1	ET-611	BEAM SLIDING CONNECTION	EA	6
BCC-2	ET-603	BEAM COLUMN CONNECTION	EA	2
CS-176	ET-600	COLUMN SPLICE – W14X176	EA	3
F-1	ET-616	POLE FOUNDATION	EA	2
FOA-2	ET-506	ADSS SUSPENSION ASSEMBLY	EA	1
FO-176	ET-614	FIBER OPTIC CROSS ARM ASSEMBLY	EA	1
G-1	ET-503	GUY STRAND ASSEMBLY	EA	2
GA-1	ET-618	GUY ANCHOR FOUNDATION	EA	2
GWD-2A	ET-507	GROUND WIRE DEAD END ASSEMBLY	EA	1
GWS-2	ET-507	GROUND WIRE ASSEMBLY	EA	1
HT-2	ET-608	TRANSMISSION CROSSARM	EA	2
KF-1	ET-605	K-FRAME CROSS BEAM – W14X145	EA	1
NA35	ET-501	STEADY INSULATOR TO BEAM ASSEMBLY	EA	2
NA61A	ET-505	SIGNAL POWER SUSPENSION ASSEMBLY	EA	2
NA27A	ET-501	MESSENGER SUSPENSION TO BRACKET ASSEMBLY	EA	2
P-1	ET-600	OCS POLE – W14X176 W/ REINFORCING ANGLES	EA	2
PC-1B	ET-614	POLE CLAMP	EA	1
PC-2D	ET-614	POLE CLAMP	EA	2
POA-70	ET-502	PULL OFF ASSEMBLY	EA	2
SB-1	ET-605	SAG BRACE	EA	2
SP-3	ET-609	SIGNAL POWER CROSSARM	EA	1
SWA-1	ET-507	STATIC WIRE ASSEMBLY	EA	1
TSA-477	ET-504	TRANSMISSION SUSPENSION ASSEMBLY	EA	4

VARIABLE DIMENSIONS

ITEM	COLUMN	TRACK	WIRE RUN	DESCRIPTION	DIMENSION	LENGTH
NA27A	–	TRACK 1	#1	ROD, BRONZE	t1	11 1/2"
NA27A	–	TRACK 1	#1	ROD, BRONZE	t2	2'-0"
NA27A	–	TRACK 2	#2	ROD, BRONZE	t1	11 1/4"
NA27A	–	TRACK 2	#2	ROD, BRONZE	t2	1'-11 3/4"
POA70	–	TRACK 1	#1	TUBING, BRONZE	P1	7'-2"
POA70	–	TRACK 1	#1	TUBING, BRONZE	P2	7'-2 1/8"
POA70	–	TRACK 2	#2	TUBING, BRONZE	P1	7'-3 7/8"
POA70	–	TRACK 2	#2	TUBING, BRONZE	P2	7'-5"
HT-2	SOUTH	–	–	ANGLE, STEEL	L1	9'-9"
HT-2	SOUTH	–	–	ANGLE, STEEL	L2	7'-9"
HT-2	NORTH	–	–	ANGLE, STEEL	L1	10'-9"
HT-2	NORTH	–	–	ANGLE, STEEL	L2	6'-3"
SP-3	SOUTH	–	–	ANGLE, STEEL	L1	4'-6"
SP-3	SOUTH	–	–	ANGLE, STEEL	L2	4'-6"

No.	Revisions	Date	By

AMTRAK

Office of Engineering
Engineering Design
National Railroad Passenger Corporation
30th Street Station, Philadelphia, Pennsylvania 19104

Approved	Date

COMMONWEALTH OF PENNSYLVANIA
REGISTERED PROFESSIONAL ENGINEER
MATTHEW JOHN SCHREFFLER
PE096326

HNTB
HNTB Corporation
1650 Arch Street, Suite 1700
Philadelphia, PA 19103
215-568-6500

KEYSTONE CORRIDOR
I-83 RECONSTRUCTION EARLY ACTION
ELECTRIC TRACTION

ERECTION DIAGRAM P-1663 1/2 (PROPOSED) (2 OF 2)

Designed PJC | Drawn PJC | Checked MJS | Date 06/13/2025

Job No.	43377
File Name	43377-S-ET-SED004
Sheet No.	35 OF 77
Dwg. No.	ET-404

PLOT SCALE: AS SHOWN
6/11/2025 12:49:24 PM 43377-s-et-SED004.dwg

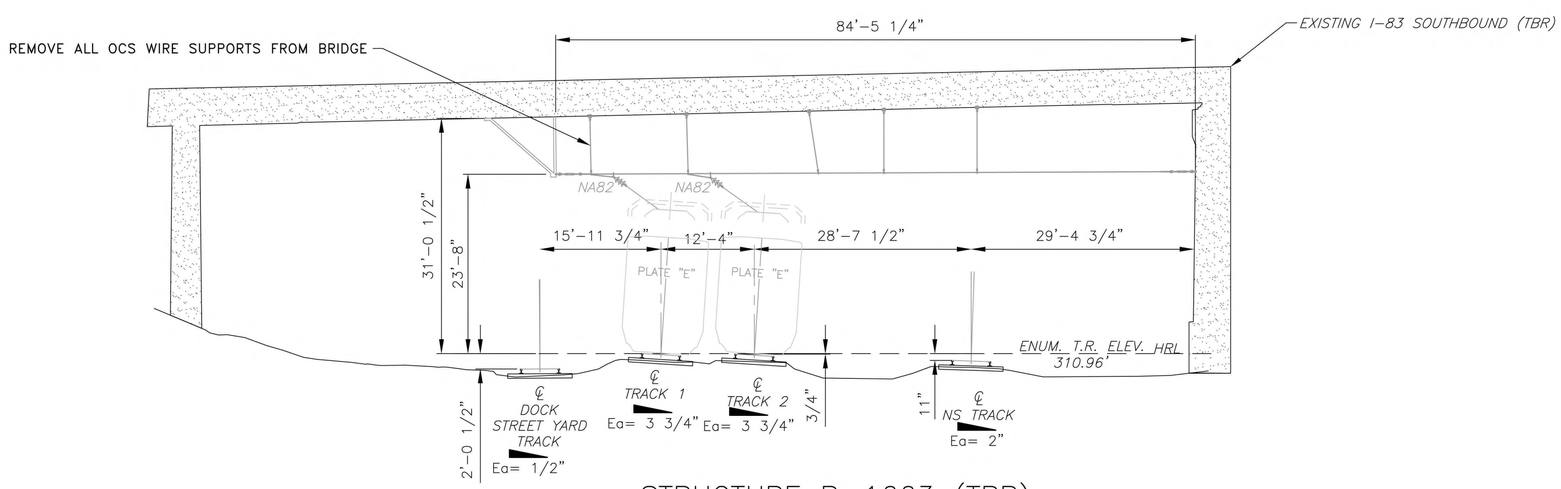

STRUCTURE P-1663 (TBR)

(LOOKING TOWARD HARRISBURG)
STATION: 5401+65
SCALE 1"=10'-0"

NOTES:

1. SEE DRAWING ET-002 FOR OCS GENERAL NOTES. SEE DRAWING ET-003 FOR LEGEND AND ABBREVIATIONS.
2. THIS DRAWING IS DRAWN FROM LIDAR DATA.

STATEMENT OF WORK:

1. REMOVE EXISTING OCS SUPPORT/REGISTRATION ASSEMBLIES DURING WIRE RUN #1 REPROFILE.
2. REMOVE EXISTING OCS SUPPORT/REGISTRATION ASSEMBLIES DURING WIRE RUN #2 REPROFILE.
3. REMOVE ALL OCS RELATED HARDWARE ATTACHED TO EXISTING I-83 VIADUCT O.H.B.

0'-0" 10'-0" 20'-0" 30'-0"
SCALE: 1"=10'

No.	Revisions	Date	By

AMTRAK

Office of Engineering
Engineering Design
National Railroad Passenger Corporation
30th Street Station, Philadelphia, Pennsylvania 19104

Approved	Date

COMMONWEALTH OF PENNSYLVANIA
REGISTERED PROFESSIONAL ENGINEER
MATTHEW JOHN SCHREFFLER
PE096326

HNTB
HNTB Corporation
1650 Arch Street, Suite 1700
Philadelphia, PA 19103
215-568-6500

KEYSTONE CORRIDOR
I-83 RECONSTRUCTION EARLY ACTION
ELECTRIC TRACTION

ERECTION DIAGRAM P-1663 (EXISTING TBR)

Designed	PJC	Drawn	PJC	Checked	MJS	Date	06/13/2025

Job No.	43377
File Name	43377-S-ET-SED005
Sheet No.	36 OF 77
Dwg. No.	ET-405

PLOT SCALE: AS SHOWN
1/23/2024 4:10:55 PM 43377-s-et-SED005.dwg

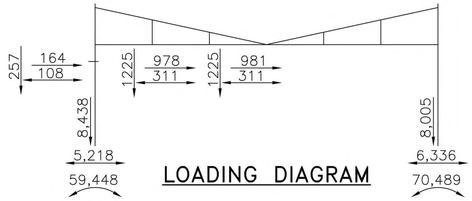

LOADING DIAGRAM

WIRE HEIGHTS		
DESCRIPTION	TRACK 1	TRACK 2
WIRE RUN	#1	#2
GROUND	22'–6"	–
MESSENGER	23'–8 3/4"	23'–8 3/4"
CONTACT	19'–5 1/2"	19'–1 3/4"

BILL OF MATERIALS				
ITEM	REF. DWG.	DESCRIPTION	UNIT	QTY
BSC–1	ET–611	BEAM SLIDING CONNECTION	EA	6
F–1A	ET–617	POLE FOUNDATION	EA	2
KF–1	ET–603	CROSS BEAM – W14X90	EA	1
NA35	ET–501	STEADY INSULATOR TO BEAM ASSEMBLY	EA	2
NA27A	ET–501	MESSENGER SUSPENSION TO BRACKET ASSEMBLY	EA	2
P–2	ET–601	OCS POLE – W14X90	EA	2
PC–5	ET–614	POLE CLAMP ASSEMBLY	EA	1
POA–70	ET–502	PULL OFF ASSEMBLY	EA	2
SB–2	ET–605	SAG BRACE	EA	2
SPLC–1	ET–603	BEAM SPLICE	EA	1
SWA–1	ET–507	STATIC WIRE ASSEMBLY	EA	1

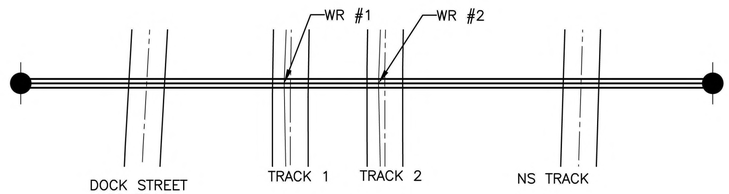

PLAN VIEW

SCALE 1"=10'–0"

VARIABLE DIMENSIONS						
ITEM	COLUMN	TRACK	WIRE RUN	DESCRIPTION	DIMENSION	LENGTH
NA27A	–	TRACK 1	#1	ROD, BRONZE	t1	1 1/2"
NA27A	–	TRACK 1	#1	ROD, BRONZE	t2	1'–7"
NA27A	–	TRACK 2	#2	ROD, BRONZE	t1	4"
NA27A	–	TRACK 2	#2	ROD, BRONZE	t2	1'–8"
POA70	–	TRACK 1	#1	TUBING, BRONZE	P1	3'–6 3/8"
POA70	–	TRACK 1	#1	TUBING, BRONZE	P2	5'–7"
POA70	–	TRACK 2	#2	TUBING, BRONZE	P1	3'–9 5/8"
POA70	–	TRACK 2	#2	TUBING, BRONZE	P2	5'–9 5/8"

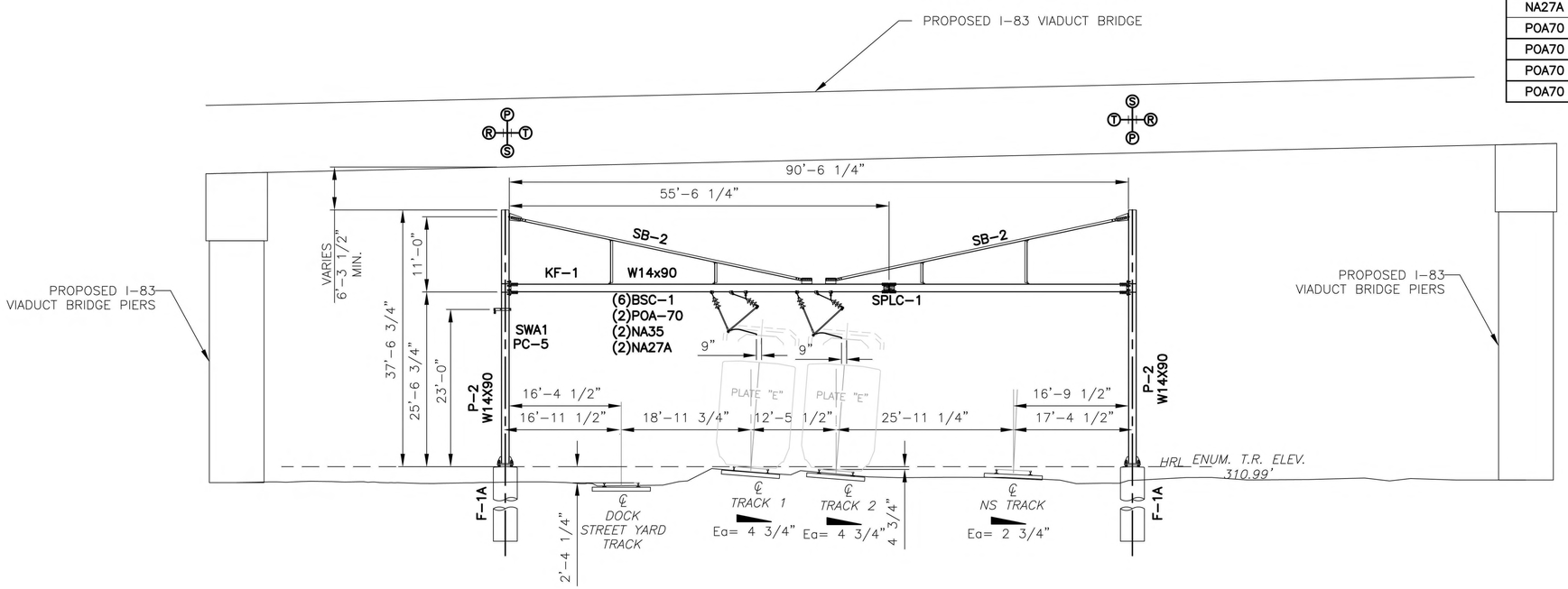

STRUCTURE P–1662 1/2 (NEW)

(LOOKING TOWARD HARRISBURG)

STATION: 5400+94

SCALE 1"=10'–0"

NOTES:

1. SEE DRAWING ET–002 FOR OCS GENERAL NOTES. SEE DRAWING ET–003 FOR LEGEND AND ABBREVIATIONS.
2. FOUNDATION DETAIL CAN BE FOUND ON DRAWINGS ET–617. FOUNDATION SCHEDULE CAN BE FOUND ON DRAWING ET–619.
3. PROPOSED I–83 VIADUCT BRIDGE AND PIERS SHOWN FOR REFERENCE ONLY. REFER TO STRUCTURES DRAWINGS FOR DETAILS.
4. PROTECTION BARRIER AND STRAIGHT FENCE TO BE PROVIDED PER AMTRAK STANDARD DRAWING ET–1446–D.

STATEMENT OF WORK:

1. INSTALL NEW COLUMN FOUNDATIONS.
2. INSTALL NEW COLUMNS.
3. INSTALL NEW K–FRAME CROSSBEAM.
4. ATTACH GROUND WIRE.
5. INSTALL NEW OCS SUPPORT/REGISTRATION ASSEMBLIES AND REPROFILE WIRE RUN #1.
6. INSTALL NEW OCS SUPPORT/REGISTRATION ASSEMBLIES AND REPROFILE WIRE RUN #2.

0'–0" 10'–0" 20'–0" 30'–0"

SCALE: 1"=10'

PLOT SCALE: AS SHOWN 43377-s-et-SED006.dwg
6/11/2025 12:49:03 PM

No.	Revisions	Date	By

AMTRAK

Office of Engineering
Engineering Design
National Railroad Passenger Corporation
30th Street Station, Philadelphia, Pennsylvania 19104

Approved	Date

COMMONWEALTH OF PENNSYLVANIA REGISTERED PROFESSIONAL ENGINEER MATTHEW JOHN SCHREFFLER PE096328

HNTB
HNTB Corporation
1650 Arch Street, Suite 1700
Philadelphia, PA 19103
215–568–6500

KEYSTONE CORRIDOR
I–83 RECONSTRUCTION EARLY ACTION
ELECTRIC TRACTION

ERECTION DIAGRAM P–1662 1/2 (PROPOSED)

Designed PJC | Drawn PJC | Checked MJS | Date 06/13/2025

Job No.	43377
File Name	43377–S–ET–SED006
Sheet No.	37 OF 77
Dwg. No.	ET–406

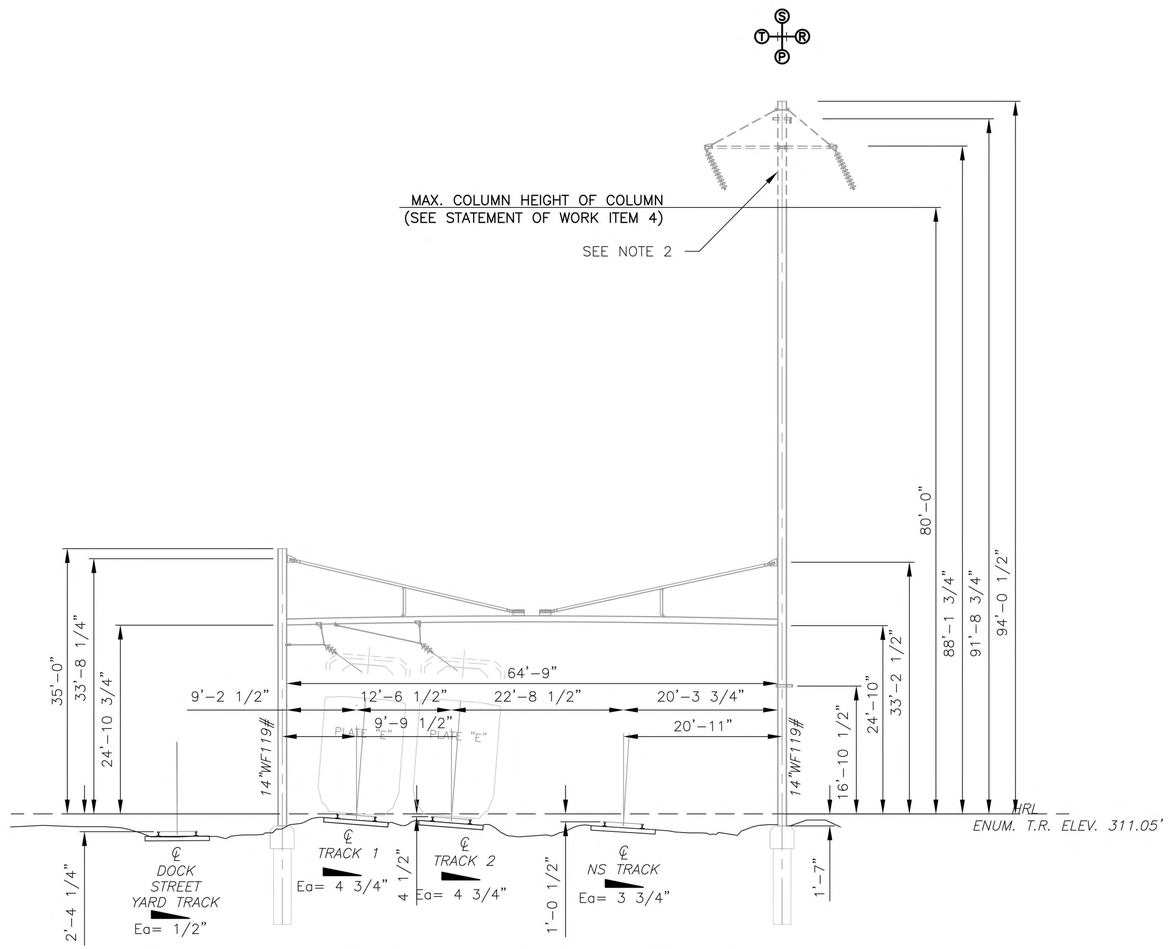

STRUCTURE P-1662 (TBR)

(LOOKING TOWARD HARRISBURG)
STATION: 5399+85
SCALE 1"=10'-0"

NOTES:

1. SEE DRAWING ET-002 FOR OCS GENERAL NOTES. SEE DRAWINGS ET-003 FOR LEGEND AND ABBREVIATIONS.
2. THIS DRAWING IS DRAWN FROM LIDAR DATA.

STATEMENT OF WORK:

1. REMOVE OCS WIRE SUPPORTS
4. REMOVE ANCILLARY WIRE SUPPORTS ON NORTH COLUMN AND CUT EXISTING SOUTH COLUMN TO 80'-0" MAXIMUM ABOVE HRL DURING PHASE 3, STAGE 1.
5. REMOVE EXISTING STRUCTURE.
6. REMOVE FOUNDATION TO 24" BELOW GRADE.

0'-0" 10'-0" 20'-0" 30'-0"
SCALE: 1"=10'

No.	Revisions	Date	By

AMTRAK

Office of Engineering
Engineering Design
National Railroad Passenger Corporation
30th Street Station, Philadelphia, Pennsylvania 19104

Approved	Date

COMMONWEALTH OF PENNSYLVANIA
REGISTERED PROFESSIONAL ENGINEER
MATTHEW JOHN SCHREFFLER
PE0963326

HNTB
HNTB Corporation
1650 Arch Street, Suite 1700
Philadelphia, PA 19103
215-568-6500

KEYSTONE CORRIDOR
I-83 RECONSTRUCTION EARLY ACTION
ELECTRIC TRACTION

ERECTION DIAGRAM P-1662 (EXISTING TBR)

Designed	PJC	Drawn	PJC	Checked	MJS	Date	06/13/2025

Job No.	43377
File Name	43377-S-ET-SED007
Sheet No.	38 OF 77
Dwg. No.	ET-407

PLOT SCALE: AS SHOWN
6/5/2025 12:10:28 PM
43377-s-et-SED007.dwg

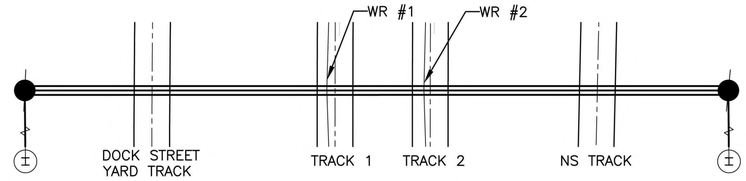

WIRE HEIGHTS

DESCRIPTION	SOUTH COLUMN	WIRE RUN #1	WIRE RUN #2	NORTH COLUMN
STATIC	123'–9"	–	–	113'–0"
FIBER OPTIC	–	–	–	110'–7"
TRANSMISSION	115'–0"	–	–	101'–0"
SIGNAL	100'–0"	–	–	–
GROUND	22'–6"	–	–	–
MESSENGER	–	22'–8 3/4"	22'–8 3/4"	–
CONTACT	–	19'–7"	19'–3 1/4"	–

PLAN VIEW

SCALE: 1"=10'–0"

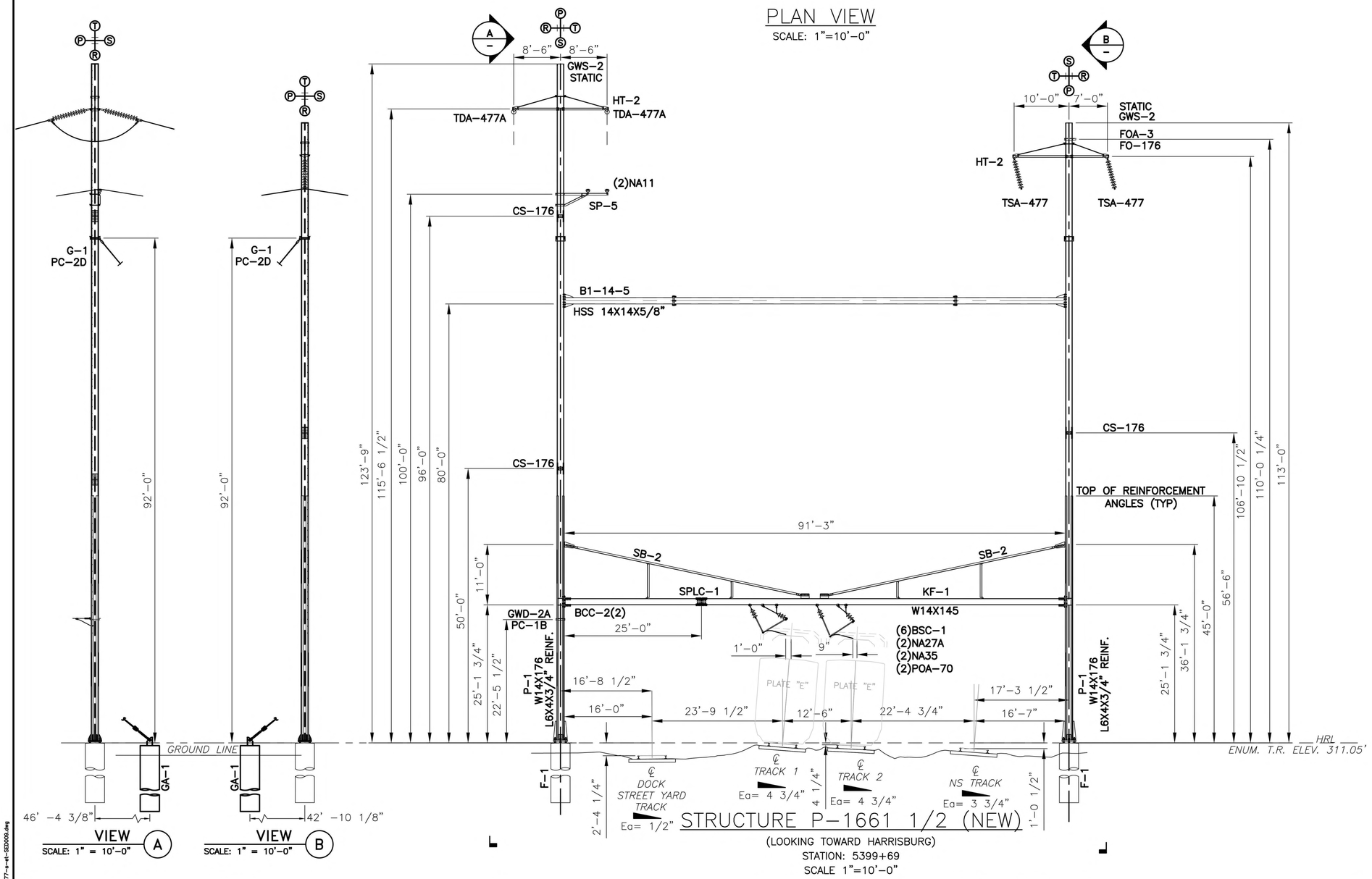

VIEW A
SCALE: 1" = 10'–0"

VIEW B
SCALE: 1" = 10'–0"

STRUCTURE P–1661 1/2 (NEW)

(LOOKING TOWARD HARRISBURG)
STATION: 5399+69
SCALE 1"=10'–0"

NOTES:

1. SEE DRAWINGS ET–001 AND ET–002 FOR GENERAL NOTES AND ABBREVIATIONS, RESPECTIVELY.
2. FOUNDATION DETAIL CAN BE FOUND ON DRAWINGS ET–616. FOUNDATION SCHEDULE CAN BE FOUND ON DRAWING ET–619.
3. OCS WIRE HEIGHTS SHOWN IN THE TABLE ARE MEASURED FROM THE TOP OF RAIL OF THE RESPECTIVE TRACK. ANCILLARY WIRE HEIGHTS ARE MEASURED FROM TOP OF HIGH RAIL LINE.
4. LOADING DIAGRAM, BOM, AND VARIABLE DIMENSIONS TABLE CAN BE FOUND ON SHEET ET–409.

STATEMENT OF WORK:

1. INSTALL NEW COLUMN FOUNDATIONS AND DOWN GUY FOUNDATIONS.
2. INSTALL NEW NORTH COLUMN COMPLETELY. INSTALL (2) NEW SECTIONS OF SOUTH COLUMN ONLY BELOW SECOND SPLICE POINT (75'–0" ABOVE HRL).
3. INSTALL NEW DEAD END FOR GROUND WIRE ON SOUTH COLUMN. ATTACH NEW GROUND WIRE.
4. DURING NIGHT OUTAGE OF OCS POWER, INSTALL NEW K–FRAME CROSSBEAM AND SOUTH COLUMN DOWN GUY ASSEMBLY.
5. INSTALL NEW OCS SUPPORT/REGISTRATION ASSEMBLIES AND REPROFILE WIRE RUN #1.
6. INSTALL NEW OCS SUPPORT/REGISTRATION ASSEMBLIES AND REPROFILE WIRE RUN #2.
7. DURING A TRANSMISSION OUTAGE (NORTH POLE LINE CIRCUIT ONLY), INSTALL TOP SECTION OF NORTH COLUMN, LATERAL SUPPORT CROSSBEAM AND NORTH COLUMN DOWN GUY ASSEMBLY. INSTALL STATIC WIRE ASSEMBLY, FIBER OPTIC ASSEMBLY, AND TRANSMISSION CROSS ARMS. ATTACH NEW STATIC WIRE, FIBER OPTIC (SPLICE WITH EXCESS LOOP), AND TRANSMISSION WIRE TO NEW SUPPORT ASSEMBLIES.
8. DURING A TRANSMISSION (SOUTH POLE LINE CIRCUIT ONLY) AND SIGNAL POWER OUTAGE, INSTALL STATIC WIRE ASSEMBLY, DOUBLE DEAD–END TRANSMISSION CROSS ARMS, AND SIGNAL POWER CROSS ARMS. ATTACH NEW STATIC WIRE, TRANSMISSION WIRE, AND SIGNAL POWER WIRE TO NEW SUPPORT ASSEMBLIES.

0'–0" 10'–0" 20'–0" 30'–0"
SCALE: 1"=10'

No.	Revisions	Date	By

AMTRAK

Office of Engineering
Engineering Design
National Railroad Passenger Corporation
30th Street Station, Philadelphia, Pennsylvania 19104

Approved	Date

COMMONWEALTH OF PENNSYLVANIA REGISTERED PROFESSIONAL ENGINEER MATTHEW JOHN SCHREFFLER PE096326

HNTB
HNTB Corporation
1650 Arch Street, Suite 1700
Philadelphia, PA 19103
215–568–6500

KEYSTONE CORRIDOR
I–83 RECONSTRUCTION EARLY ACTION
ELECTRIC TRACTION

ERECTION DIAGRAM P–1661 1/2 (PROPOSED) (1 OF 2)

Designed PJC | Drawn PJC | Checked MJS | Date 06/13/2025

Job No. 43377
File Name 43377–S–ET–SED009
Sheet No. 39 OF 77
Dwg. No. ET–408

PLOT SCALE: AS SHOWN
6/12/2025 12:06:10 PM
43377–s–et–SED009.dwg

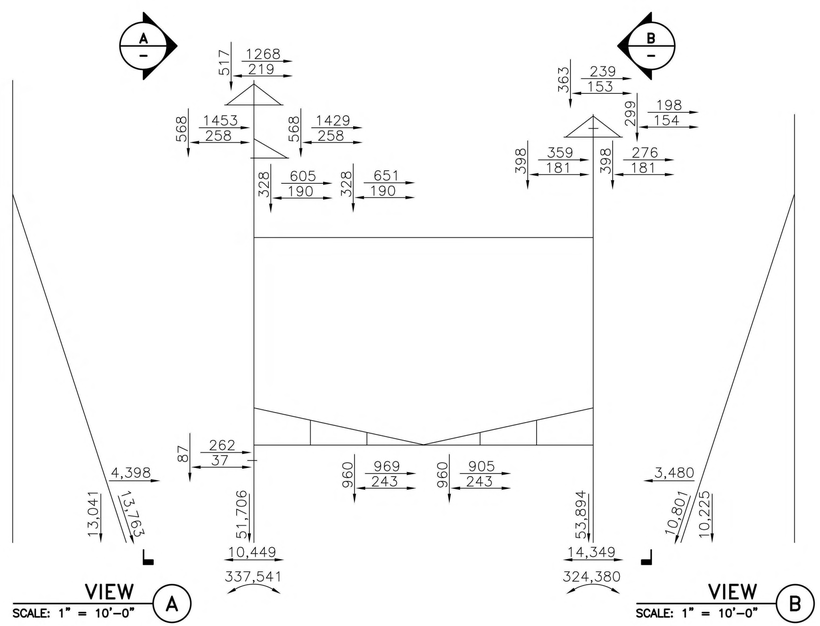

STRUCTURE P-1661 1/2 (NEW)
LOADING DIAGRAM

(LOOKING TOWARD HARRISBURG)
STATION: 5399+69

BILL OF MATERIALS

ITEM	REF. DWG.	DESCRIPTION	UNIT	QTY
B1-14-5	ET-604	CROSSBEAM LATERAL SUPPORT – HSS 14X14X5/8"	EA	1
BSC-1	ET-611	BEAM SLIDING CONNECTION	EA	6
BCC-2	ET-603	BEAM COLUMN CONNECTION	EA	2
CS-176	ET-602	COLUMN SPLICE – W14-176	EA	3
F-1	ET-616	POLE FOUNDATION	EA	2
FOA-3	ET-506	ADSS DOULBE DEAD-END ASSEMBLY	EA	1
FO-176	ET-614	FIBER OPTIC CROSS ARM ASSEMBLY	EA	1
G-1	ET-503	GUY STRAND ASSEMBLY	EA	2
GA-1	ET-618	GUY ANCHOR FOUNDATION	EA	2
GWD-2A	ET-507	GROUND WIRE ASSEMBLY	EA	1
GWS-2	ET-507	GROUND WIRE ASSEMBLY	EA	2
HT-2	ET-608	TRANSMISSION CROSSARM	EA	2
KF-1	ET-603	K-FRAME CROSS BEAM – W14X145	EA	1
NA11	ET-505	SIGNAL POWER INSULATOR ASSEMBLY	EA	2
NA35	ET-501	STEADY INSULATOR TO BEAM ASSEMBLY	EA	2
NA27A	ET-501	MESSENGER SUSPENSION TO BRACKET ASSEMBLY	EA	2
P-1	ET-600	OCS POLE – W14X176 W/REINFORCING ANGLES	EA	2
PC-1A	ET-614	POLE CLAMP	EA	1
PC-2D	ET-614	POLE CLAMP	EA	2
POA-70	ET-502	PULL OFF ASSEMBLY	EA	2
SB-2	ET-605	SAG BRACE	EA	2
SP-5	ET-610	SIGNAL POWER CROSSARM	EA	1
SPLC-1	ET-603	BEAM SPLICE	EA	1
TDA-477A	ET-504	TRANSMISSION DEAD END ASSEMBLY	EA	2
TSA-477	ET-504	TRANSMISSION SUSPENSION ASSEMBLY	EA	2

VARIABLE DIMENSIONS

ITEM	COLUMN	TRACK	WIRE RUN	DESCRIPTION	DIMENSION	LENGTH
NA27A	–	TRACK 1	#1	ROD, BRONZE	t1	8 1/2"
NA27A	–	TRACK 1	#1	ROD, BRONZE	t2	2'-2 1/2"
NA27A	–	TRACK 2	#2	ROD, BRONZE	t1	6 3/4"
NA27A	–	TRACK 2	#2	ROD, BRONZE	t2	1'-2 3/4"
POA70	–	TRACK 1	#1	TUBING, BRONZE	P1	3'-0 1/2"
POA70	–	TRACK 1	#1	TUBING, BRONZE	P2	4'-11 1/4"
POA70	–	TRACK 2	#2	TUBING, BRONZE	P1	3'-8 1/4"
POA70	–	TRACK 2	#2	TUBING, BRONZE	P2	5'-0 1/2"
HT-2	SOUTH	–	–	ANGLE, STEEL	L1	8'-6"
HT-2	SOUTH	–	–	ANGLE, STEEL	L2	8'-6"
HT-2	NORTH	–	–	ANGLE, STEEL	L1	8'-6"
HT-2	NORTH	–	–	ANGLE, STEEL	L2	8'-6"
SP-5	SOUTH	–	–	ANGLE, STEEL	L1	5'-0"
SP-5	SOUTH	–	–	ANGLE, STEEL	L2	3'-6"

PLOT SCALE: AS SHOWN 43377-s-et-SED009.dwg
6/13/2025 12:06:10 PM

No.	Revisions	Date	By

AMTRAK

Office of Engineering
Engineering Design
National Railroad Passenger Corporation
30th Street Station, Philadelphia, Pennsylvania 19104

Approved	Date

COMMONWEALTH OF PENNSYLVANIA
REGISTERED PROFESSIONAL ENGINEER
MATTHEW JOHN SCHREFFLER
PE096326

HNTB
HNTB Corporation
1650 Arch Street, Suite 1700
Philadelphia, PA 19103
215-568-6500

KEYSTONE CORRIDOR
I-83 RECONSTRUCTION EARLY ACTION
ELECTRIC TRACTION

ERECTION DIAGRAM P-1661 1/2 (PROPOSED) (2 OF 2)

Designed PJC | Drawn PJC | Checked MJS | Date 06/13/2025

Job No. 43377
File Name 43377-S-ET-SED009
Sheet No. 40 OF 77
Dwg. No. ET-409

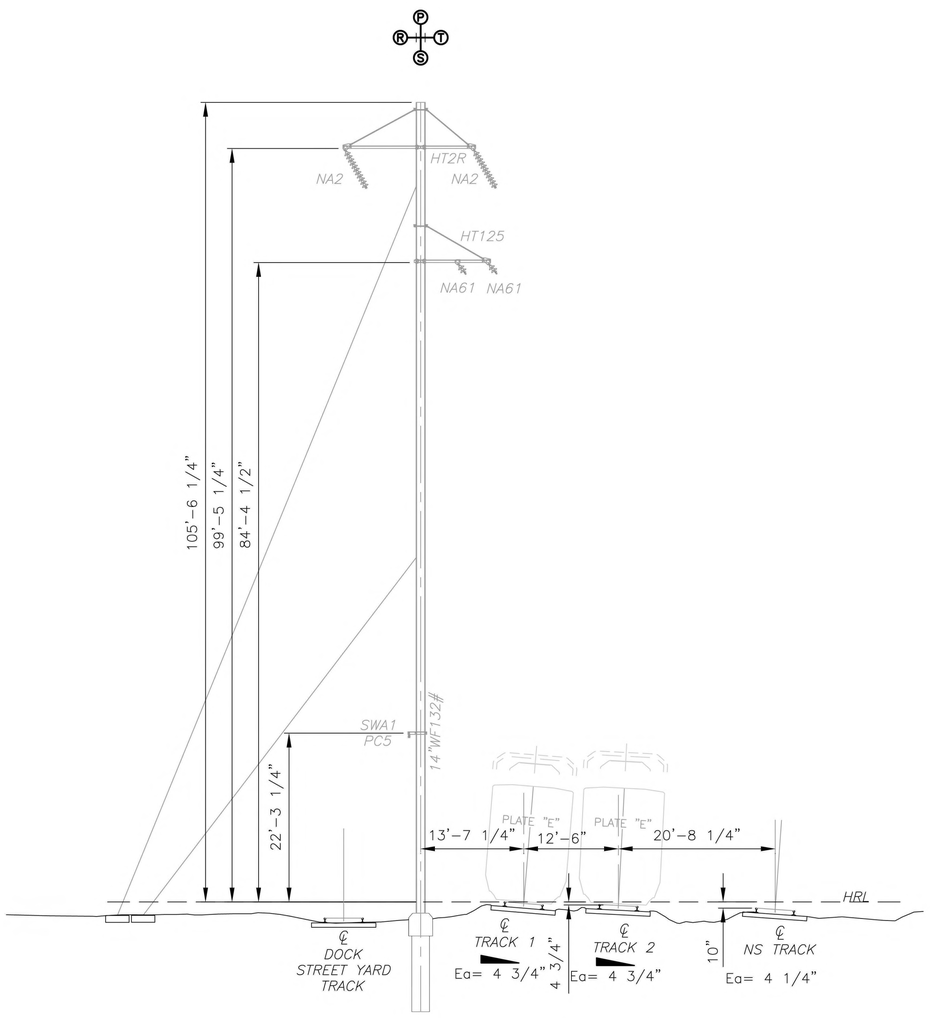

STRUCTURE P-1661A (TBR)

(LOOKING TOWARD HARRISBURG)
STATION: 5399+64
SCALE 1"=10'-0"

NOTES:

1. SEE DRAWING ET-002 FOR OCS GENERAL NOTES. SEE DRAWING ET-003 FOR LEGEND AND ABBREVIATIONS.
2. THIS DRAWING IS DRAWN FROM LIDAR DATA.

STATEMENT OF WORK:

1. REMOVE ANCILLARY WIRE SUPPORTS.
2. REMOVE EXISTING STRUCTURE.
3. REMOVE FOUNDATION TO 24" BELOW GRADE.

0'-0" 10'-0" 20'-0" 30'-0"
SCALE: 1"=10'

No.	Revisions	Date	By

AMTRAK

Office of Engineering
Engineering Design
National Railroad Passenger Corporation
30th Street Station, Philadelphia, Pennsylvania 19104

Approved	Date

COMMONWEALTH OF PENNSYLVANIA
REGISTERED PROFESSIONAL ENGINEER
MATTHEW JOHN SCHREFFLER
PE096326

HNTB
HNTB Corporation
1650 Arch Street, Suite 1700
Philadelphia, PA 19103
215-568-6500

KEYSTONE CORRIDOR
I-83 RECONSTRUCTION EARLY ACTION
ELECTRIC TRACTION

ERECTION DIAGRAM P-1661A (EXISTING TBR)

Designed PJC | Drawn PJC | Checked MJS | Date 06/13/2025

Job No.	43377
File Name	43377-S-ET-SED008
Sheet No.	41 OF 77
Dwg. No.	ET-410

PLOT SCALE: AS SHOWN
9/6/2024 1:51:07 PM 43377-s-et-SED008.dwg

WIRE HEIGHTS

DESCRIPTION	SOUTH COLUMN	WIRE RUN #1	WIRE RUN #2	NORTH COLUMN
STATIC	–	–	–	78'–3 1/4" (EX.)
FIBER OPTIC	–	–	–	75'–5 3/4" (EX.)
TRANSMISSION	–	–	–	73'–1/4"
SIGNAL	–	–	–	–
GROUND	–	–	–	–
MESSENGER	–	23'–1 3/4"	23'–7 3/4"	–
CONTACT	–	19'–9"	19'–5 1/4"	–

BILL OF MATERIALS

ITEM	REF. DWG.	DESCRIPTION	UNIT	QTY
BKPL–1	ET–611	BEAM SLIDING CONNECTION	EA	6
FOA–3	ET–506	ADSS DOULBE DEAD–END ASSEMBLY	EA	1
FO–119	ET–614	FIBER OPTIC CROSS ARM ASSEMBLY	EA	1
GWD–4	ET–507	STATIC WIRE DOUBLE DEAD END ASSEMBLY	EA	1
HT–2	ET–608	TRANSMISSION CROSSARM	EA	1
NA27A	ET–501	MESSENGER SUSPENSION TO BRACKET ASSEMBLY	EA	2
NA35	ET–501	STEADY INSULATOR TO BEAM ASSEMBLY	EA	2
PC–1A	ET–614	POLE CLAMP	EA	1
POA–70	ET–502	PULL OFF ASSEMBLY	EA	2
TDA–477A	ET–504	TRANSMISSION DEAD END ASSEMBLY	EA	2

VARIABLE DIMENSIONS

ITEM	COLUMN	TRACK	WIRE RUN	DESCRIPTION	DIMENSION	LENGTH
NA27A	–	TRACK 1	#1	ROD, BRONZE	t1	8 3/4"
NA27A	–	TRACK 1	#1	ROD, BRONZE	t2	1'–8 1/4"
NA27A	–	TRACK 2	#2	ROD, BRONZE	t1	6 1/2"
NA27A	–	TRACK 2	#2	ROD, BRONZE	t2	1'–4 3/4"
POA70	–	TRACK 1	#1	TUBING, BRONZE	P1	3'–8 1/2"
POA70	–	TRACK 1	#1	TUBING, BRONZE	P2	5'–0"
POA70	–	TRACK 2	#2	TUBING, BRONZE	P1	4'–3 3/4"
POA70	–	TRACK 2	#2	TUBING, BRONZE	P2	5'–5 3/4"
HT–2	NORTH	–	–	ANGLE, STEEL	L1	10'–6"
HT–2	NORTH	–	–	ANGLE, STEEL	L2	7'–6"

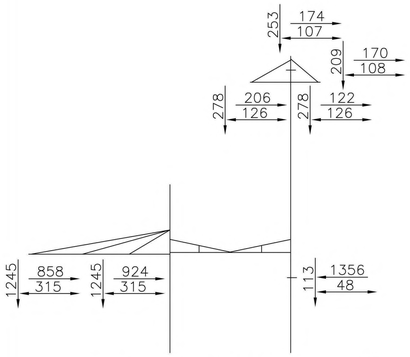

LOADING DIAGRAM

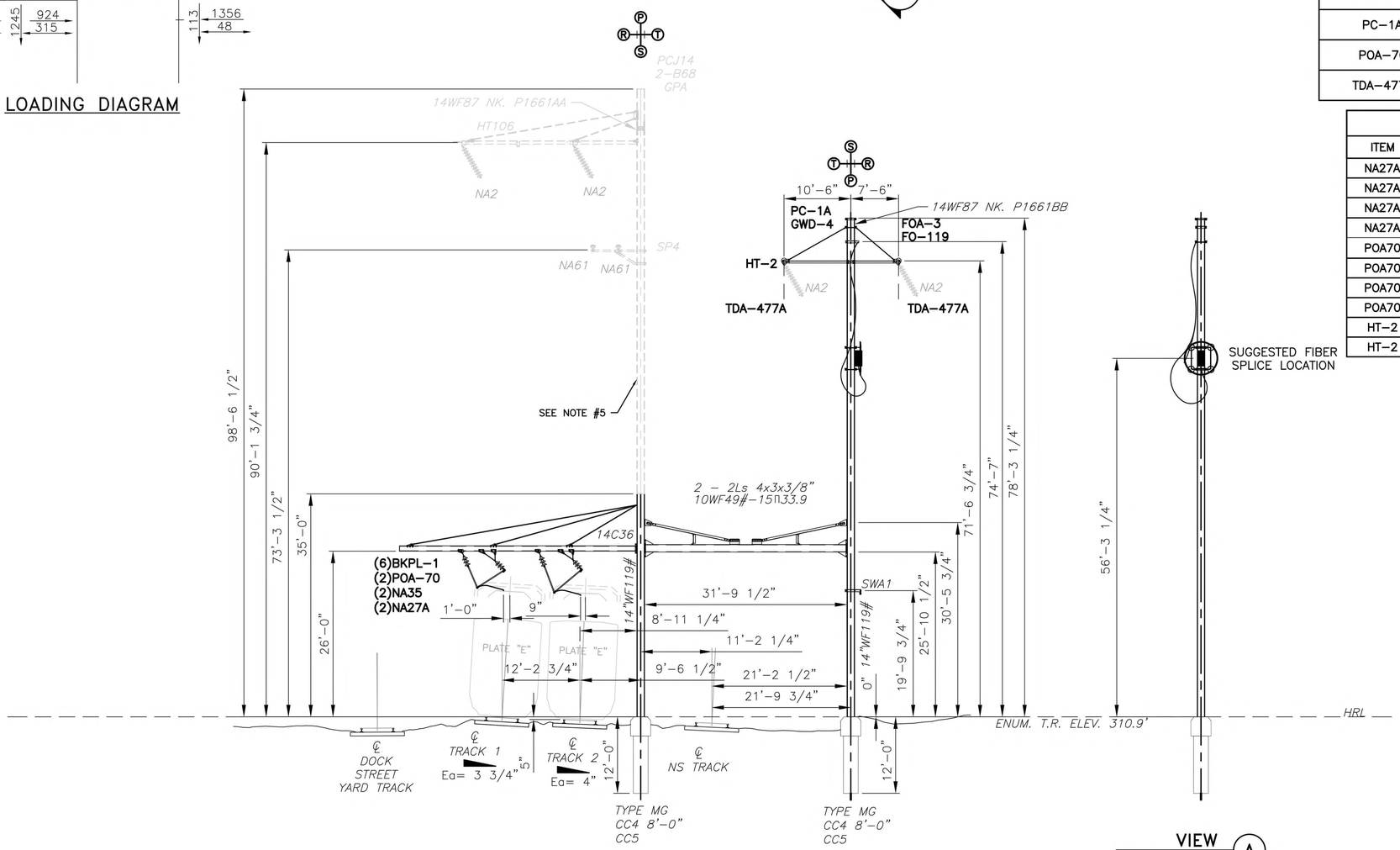

STRUCTURE P–1661 (MODIFIED)

(LOOKING TOWARD HARRISBURG)
STATION: 5398+05
SCALE 1"=10'–0"

VIEW A
SCALE: 1" = 10'–0"

NOTES:

1. SEE DRAWING ET–002 FOR OCS GENERAL NOTES. SEE DRAWING ET–003 FOR LEGEND AND ABBREVIATIONS.
2. THIS DRAWING IS DRAWN FROM AS BUILT DRAWING 47D–7078–2 AS WELL AS LIDAR.
3. SUGGESTED FIBER SPLICE LOCATION PROVIDED FOR CONSIDERATION BY OWNER OF FIBER WORK (BY ZAYO).

STATEMENT OF WORK:

1. INSTALL PROPOSED FIBER OPTIC SUPPORT ASSEMBLIES AND ADDITIONAL FIBER OPTIC CABLE DURING PHASE 3, STAGE 1 (SEE SUGGESTED FIBER SPLICE LOCATION, FOR REFERENCE ONLY. TO BE COMPLETED BY ZAYO).
2. INSTALL NEW OCS SUPPORT/REGISTRATION ASSEMBLIES AND REPROFILE WIRE RUN #1.
3. INSTALL NEW OCS SUPPORT/REGISTRATION ASSEMBLIES AND REPROFILE WIRE RUN #2.
4. REMOVE EXISTING STATIC WIRE SUPPORT ASSEMBLIES. TERMINATE EXISTING STATIC WIRE AND ATTACH NEW STATIC WIRE.
5. TERMINATE EXISTING TRANSMISSION WIRE SUPPORT ASSEMBLIES. INSTALL DEAD–END TRANSMISSION ASSEMBLY AND TERMINATE EXISTING TRANSMISSION WIRE ON IT. ATTACH NEW TRANSMISSION WIRE DURING PHASE 3, STAGE 1.
6. CUT AND REMOVE SOUTH COLUMN TO 35' ABOVE HIGH RAIL LINE.

0'–0" 10'–0" 20'–0" 30'–0"
SCALE: 1"=10'

No.	Revisions	Date	By

AMTRAK

Office of Engineering
Engineering Design
National Railroad Passenger Corporation
30th Street Station, Philadelphia, Pennsylvania 19104

Approved	Date

COMMONWEALTH OF PENNSYLVANIA
REGISTERED PROFESSIONAL ENGINEER
MATTHEW JOHN SCHREFFLER
PE096326

HNTB
HNTB Corporation
1650 Arch Street, Suite 1700
Philadelphia, PA 19103
215–568–6500

KEYSTONE CORRIDOR
I–83 RECONSTRUCTION EARLY ACTION
ELECTRIC TRACTION

ERECTION DIAGRAM P–1661 (EXISTING)

Designed PJC | Drawn PJC | Checked MJS | Date 06/13/2025

Job No.	43377
File Name	43377–S–ET–SED010
Sheet No.	42 OF 77
Dwg. No.	ET–411

PLOT SCALE: AS SHOWN
6/5/2025 3:49:11 PM
43377–S–ET–SED010.dwg

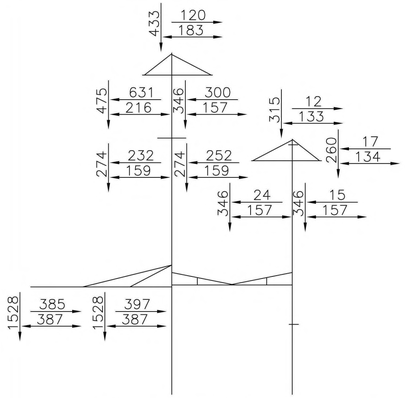

LOADING DIAGRAM

WIRE HEIGHTS

DESCRIPTION	SOUTH COLUMN	WIRE RUN #1	WIRE RUN #2	NORTH COLUMN
STATIC	90'–2" (EX.)	–	–	67'–4 1/2" (EX.)
FIBER OPTIC	–	–	–	65'–3 3/4" (EX.)
TRANSMISSION	83'–0"	–	–	55'–1 1/2" (EX.)
SIGNAL	67'–6 3/4"	–	–	–
MESSENGER	–	25'–1"	25'–7"	–
CONTACT	–	20'–0"	19'–7 3/4"	–

BILL OF MATERIALS

ITEM	REF. DWG.	DESCRIPTION	UNIT	QTY
BKPL–1	ET–611	BEAM SLIDING CONNECTION	EA	6
GWD–4	ET–507	STATIC WIRE DOUBLE DEAD END ASSEMBLY	EA	1
HT–2	ET–608	TRANSMISSION CROSSARM	EA	1
NA12	ET–505	SIGNAL POWER DOUBLE DEAD END ASSEMBLY	EA	2
NA27A	ET–501	MESSENGER SUSPENSION TO BRACKET ASSEMBLY	EA	2
NA35	ET–501	STEADY INSULATOR TO BEAM ASSEMBLY	EA	2
PC–1A	ET–614	POLE CLAMP	EA	1
POA–70	ET–502	PULL OFF ASSEMBLY	EA	2
SP–2	ET–609	SIGNAL POWER CROSSARM	EA	1
TDA–477A	ET–504	TRANSMISSION DEAD END ASSEMBLY	EA	2

VARIABLE DIMENSIONS

ITEM	COLUMN	TRACK	WIRE RUN	DESCRIPTION	DIMENSION	LENGTH
NA27A	–	TRACK 1	#1	ROD, BRONZE	t1	7 1/2"
NA27A	–	TRACK 1	#1	ROD, BRONZE	t2	1'–5 1/4"
NA27A	–	TRACK 2	#2	ROD, BRONZE	t1	8 1/4"
NA27A	–	TRACK 2	#2	ROD, BRONZE	t2	1'–6"
POA70	–	TRACK 1	#1	TUBING, BRONZE	P1	5'–3 1/2"
POA70	–	TRACK 1	#1	TUBING, BRONZE	P2	6'–0 3/4"
POA70	–	TRACK 2	#2	TUBING, BRONZE	P1	6'–2 1/4"
POA70	–	TRACK 2	#2	TUBING, BRONZE	P2	6'–8 1/2"
HT–2	SOUTH	–	–	ANGLE, STEEL	L1	7'–6"
HT–2	SOUTH	–	–	ANGLE, STEEL	L2	10'–6"
HT–2	NORTH	–	–	ANGLE, STEEL	L1	10'–6"
HT–2	NORTH	–	–	ANGLE, STEEL	L2	7'–6"
SP–2	SOUTH	–	–	ANGLE, STEEL	L1	4'–0"
SP–2	SOUTH	–	–	ANGLE, STEEL	L2	4'–0"

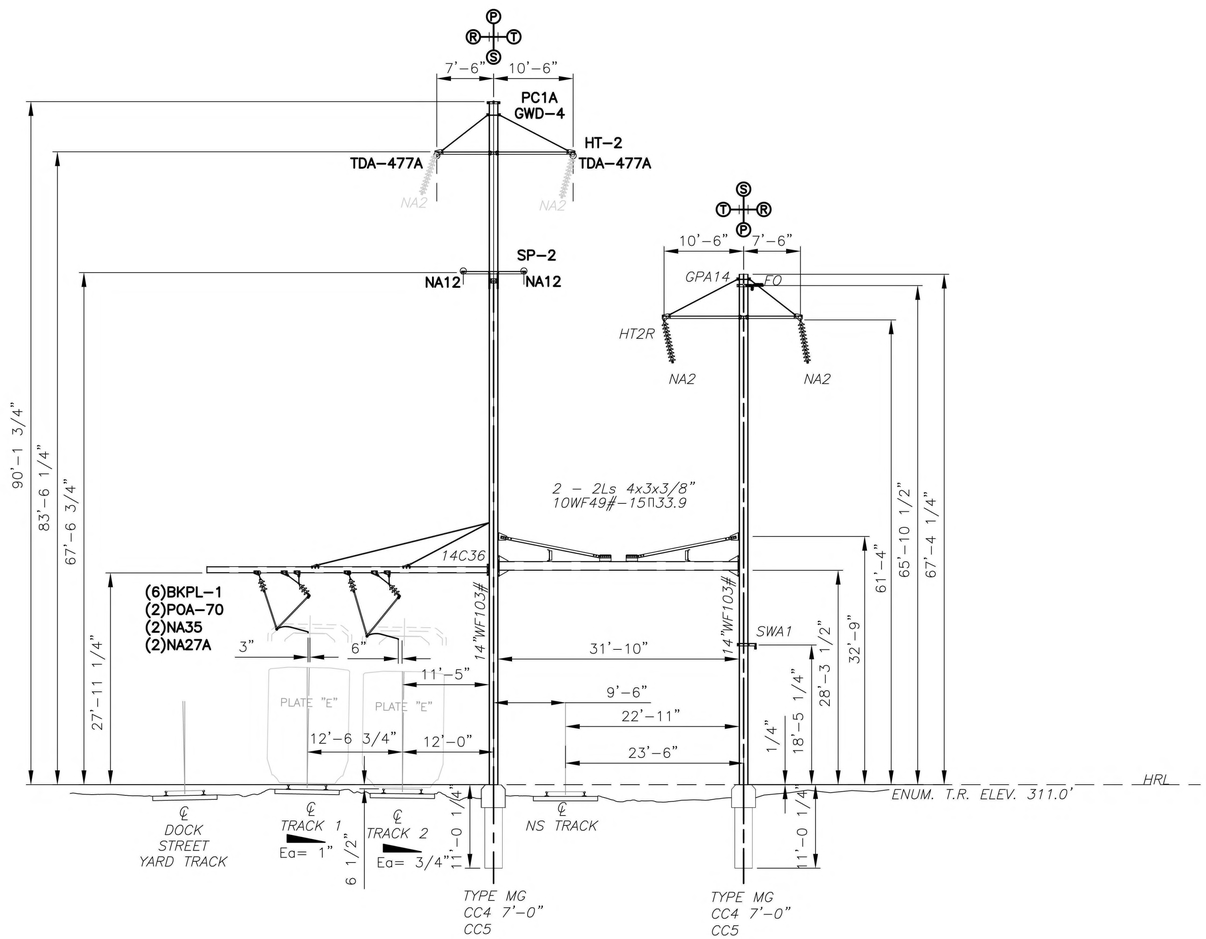

NOTES:

1. SEE DRAWING ET–002 FOR OCS GENERAL NOTES. SEE DRAWING ET–003 FOR LEGEND AND ABBREVIATIONS.
2. THIS DRAWING IS DRAWN FROM AS BUILT DRAWING 29E–2660–5 AS WELL AS LIDAR.

STATEMENT OF WORK:

1. INSTALL NEW OCS SUPPORT/REGISTRATION ASSEMBLIES AND REPROFILE WIRE RUN #1.
2. INSTALL NEW OCS SUPPORT/REGISTRATION ASSEMBLIES AND REPROFILE WIRE RUN #2.
3. REMOVE EXISTING STATIC WIRE SUPPORT ASSEMBLIES. TERMINATE EXISTING STATIC WIRE AND ATTACH NEW STATIC WIRE.
4. REMOVE EXISTING TRANSMISSION WIRE SUPPORT ASSEMBLIES. INSTALL DEAD–END TRANSMISSION ASSEMBLY AND TERMINATE EXISTING TRANSMISSION WIRE ON IT. ATTACH NEW TRANSMISSION WIRE.
5. INSTALL DEAD–END SIGNAL POWER ASSEMBLY AND TERMINATE EXISTING SIGNAL POWER WIRE ON IT. ATTACH NEW SIGNAL POWER WIRE.

STRUCTURE P–1660

(LOOKING TOWARD HARRISBURG)
STATION: 5395+95
SCALE 1"=10'–0"

0'–0" 10'–0" 20'–0" 30'–0"
SCALE: 1"=10'

No.	Revisions	Date	By

AMTRAK

Office of Engineering
Engineering Design
National Railroad Passenger Corporation
30th Street Station, Philadelphia, Pennsylvania 19104

Approved	Date

COMMONWEALTH OF PENNSYLVANIA REGISTERED PROFESSIONAL ENGINEER MATTHEW JOHN SCHREFFLER PE096326

HNTB
HNTB Corporation
1650 Arch Street, Suite 1700
Philadelphia, PA 19103
215–568–6500

KEYSTONE CORRIDOR
I–83 RECONSTRUCTION EARLY ACTION
ELECTRIC TRACTION
ERECTION DIAGRAM P–1660 (EXISTING)

Designed PJC | Drawn PJC | Checked MJS | Date 06/13/2025

Job No. 43377
File Name 43377–S–ET–SED011
Sheet No. 43 OF 77
Dwg. No. ET–412

PLOT SCALE: AS SHOWN
9/6/2024 2:01:26 PM
43377–s–et–SED011.dwg

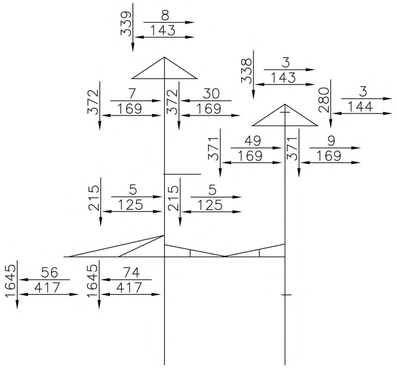

LOADING DIAGRAM

WIRE HEIGHTS				
DESCRIPTION	SOUTH COLUMN	WIRE RUN #1	WIRE RUN #2	NORTH COLUMN
STATIC	82'–1 1/4" (EX.)	–	–	69'–9 1/2" (EX.)
FIBER OPTIC	–	–	–	67'–1 1/2" (EX.)
TRANSMISSION	69'–9" (EX.)	–	–	57'–5 3/4" (EX.)
SIGNAL	51'–7 3/4" (EX.)	–	–	–
MESSENGER	–	25'–1 1/2" (EX.)	24'–9 1/2" (EX.)	–
CONTACT	–	20'–3" (EX.)	19'–10 3/4"(EX.)	–

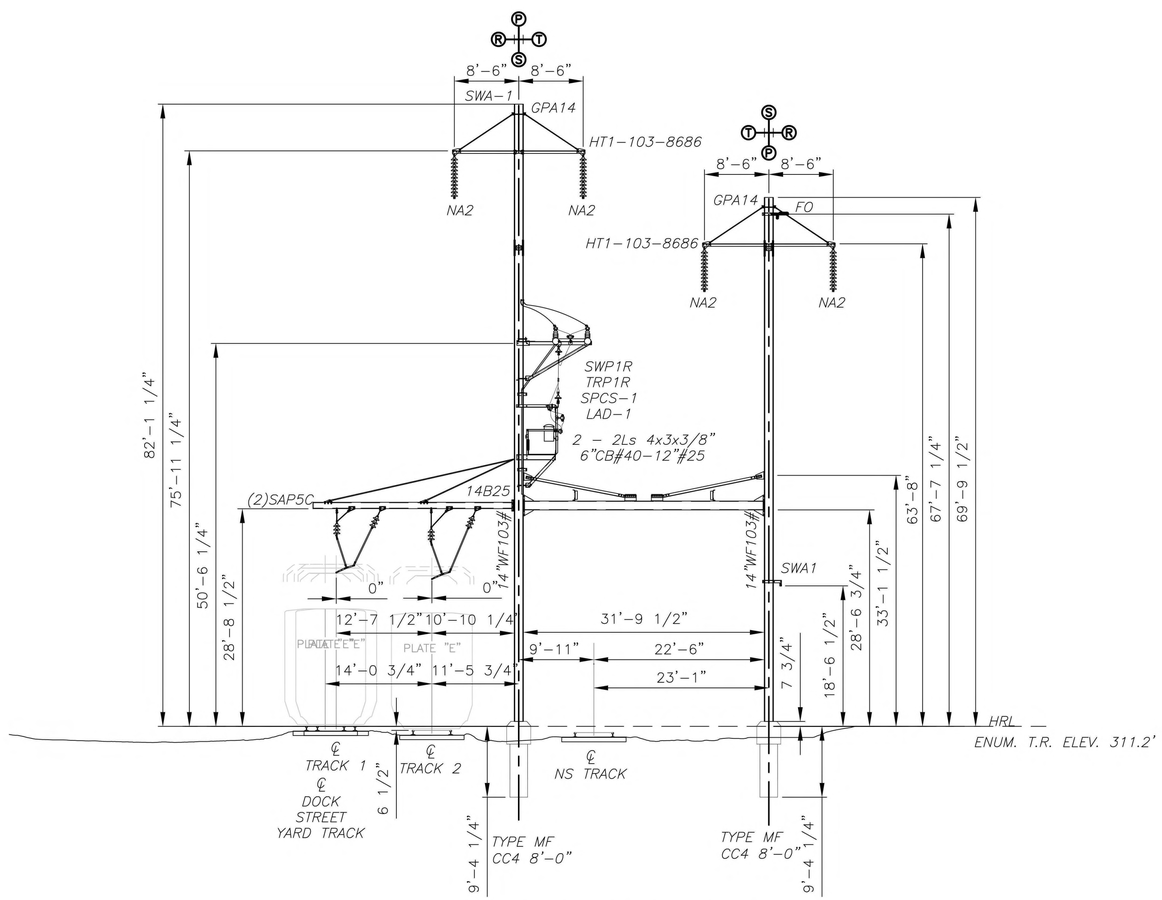

STRUCTURE P–1659

(LOOKING TOWARD HARRISBURG)
STATION: 5393+45
SCALE 1"=10'–0"

NOTES:

1. SEE DRAWINGS ET–001 AND ET–002 FOR GENERAL NOTES AND ABBREVIATIONS, RESPECTIVELY.
2. THIS DRAWING IS DRAWN FROM AS BUILT DRAWING 29E–2659–5 AS WELL AS LIDAR.
3. OCS WIRE HEIGHTS SHOWN IN THE TABLE ARE MEASURED FROM THE TOP OF RAIL OF THE RESPECTIVE TRACK WHERE THE INDIVIDUAL WIRE IS TYPICALLY IN–RUNNING (NOTEWORTHY FOR OUT–OF–RUNNING HEIGHTS AND TERMINATIONS WHERE INNER TRACKS' WIRE RUNS CROSS OVER THE OUTER TRACKS). ANCILLARY WIRE HEIGHTS ARE MEASURED FROM TOP OF HIGH RAIL.

STATEMENT OF WORK:

1. DRAWING IS SHOWN FOR REFERENCE ONLY. NO WORK ANTICIPATED AT THIS STRUCTURE.

0'–0" 10'–0" 20'–0" 30'–0"
SCALE: 1"=10'

No.	Revisions	Date	By

AMTRAK

Office of Engineering
Engineering Design
National Railroad Passenger Corporation
30th Street Station, Philadelphia, Pennsylvania 19104

Approved	Date

COMMONWEALTH OF PENNSYLVANIA REGISTERED PROFESSIONAL ENGINEER MATTHEW JOHN SCHREFFLER PE096328

HNTB
HNTB Corporation
1650 Arch Street, Suite 1700
Philadelphia, PA 19103
215-568-6500

KEYSTONE CORRIDOR
I–83 RECONSTRUCTION EARLY ACTION
ELECTRIC TRACTION

ERECTION DIAGRAM P–1659 (EXISTING)

Designed PJC | Drawn PJC | Checked MJS | Date 06/13/2025

Job No.	43377
File Name	43377–S–ET–SED012
Sheet No.	44 OF 77
Dwg. No.	ET–413

PLOT SCALE: AS SHOWN
9/6/2024 2:03:57 PM
43377–s–et–SED012.dwg

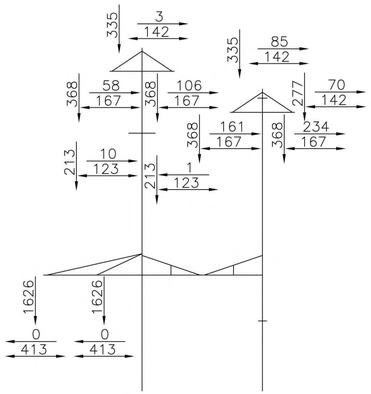

LOADING DIAGRAM

WIRE HEIGHTS				
DESCRIPTION	SOUTH COLUMN	WIRE RUN #1	WIRE RUN #2	NORTH COLUMN
STATIC	89'–1 1/2" (EX.)	–	–	78'–3 1/4" (EX.)
FIBER OPTIC	–	–	–	75'–4 3/4" (EX.)
TRANSMISSION	76'–7 3/4" (EX.)	–	–	65'–9 3/4" (EX.)
SIGNAL	67'–7" (EX.)	–	–	–
MESSENGER	–	25'–2 1/2" (EX.)	24'–11" (EX.)	–
CONTACT	–	21'–1/4" (EX.)	20'–9 3/4" (EX.)	–

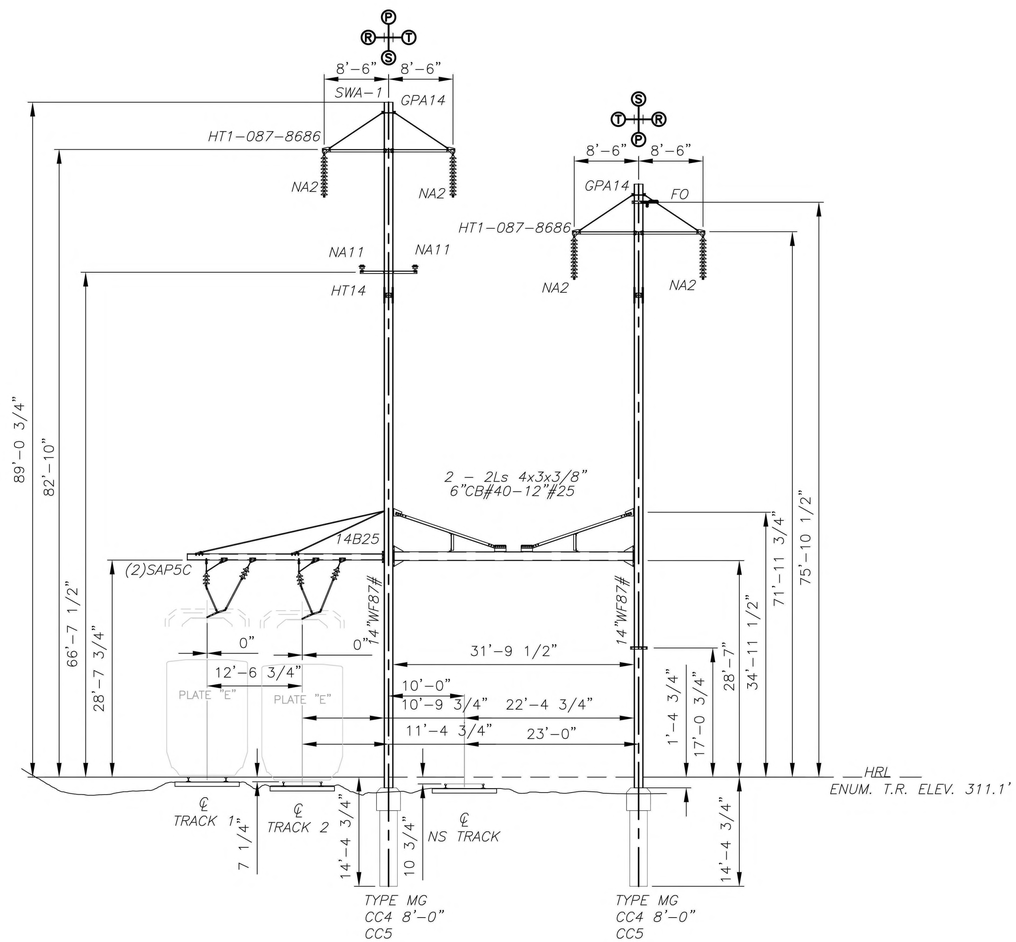

STRUCTURE P–1658

(LOOKING TOWARD HARRISBURG)
STATION: 5391+00
SCALE 1"=10'–0"

NOTES:

1. SEE DRAWINGS ET–001 AND ET–002 FOR GENERAL NOTES AND ABBREVIATIONS, RESPECTIVELY.
2. OCS WIRE HEIGHTS SHOWN IN THE TABLE ARE MEASURED FROM THE TOP OF RAIL OF THE RESPECTIVE TRACK WHERE THE INDIVIDUAL WIRE IS TYPICALLY IN–RUNNING (NOTEWORTHY FOR OUT–OF–RUNNING HEIGHTS AND TERMINATIONS WHERE INNER TRACKS' WIRE RUNS CROSS OVER THE OUTER TRACKS). ANCILLARY WIRE HEIGHTS ARE MEASURED FROM TOP OF HIGH RAIL.

STATEMENT OF WORK:

1. DRAWING IS SHOWN FOR REFERENCE ONLY. NO WORK ANTICIPATED AT THIS STRUCTURE.
2. THIS DRAWING IS DRAWN FROM AS BUILT DRAWING 29E–2658–4 AS WELL AS LIDAR.

0'–0" 10'–0" 20'–0" 30'–0"
SCALE: 1"=10'

PLOT SCALE: AS SHOWN 43377-s-et-SED013.dwg
9/6/2024 4:02:10 PM

No.	Revisions	Date	By

AMTRAK

Office of Engineering
Engineering Design
National Railroad Passenger Corporation
30th Street Station, Philadelphia, Pennsylvania 19104

Approved	Date

COMMONWEALTH OF PENNSYLVANIA REGISTERED PROFESSIONAL ENGINEER MATTHEW JOHN SCHREFFLER PE096328

HNTB
HNTB Corporation
1650 Arch Street, Suite 1700
Philadelphia, PA 19103
215–568–6500

KEYSTONE CORRIDOR
I–83 RECONSTRUCTION EARLY ACTION
ELECTRIC TRACTION

ERECTION DIAGRAM P–1658 (EXISTING)

Designed PJC Drawn PJC Checked MJS Date 06/13/2025

Job No.	43377
File Name	43377–S–ET–SED013
Sheet No.	45 OF 77
Dwg. No.	ET–414

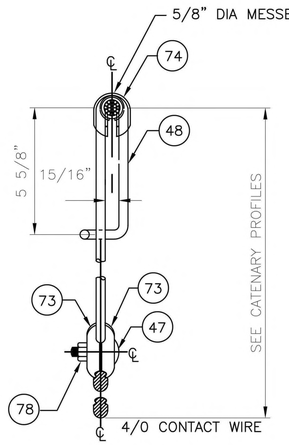

ASSEMBLY "ME"

NOT TO SCALE
HANGER ASSEMBLY
ADD 7 1/2" TO TABULATED
LENGTH FOR CUTTING LENGTH

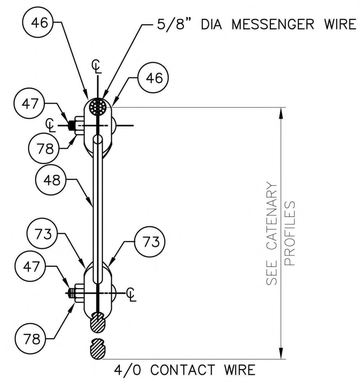

ASSEMBLY "J"

NOT TO SCALE
HANGER ASSEMBLY

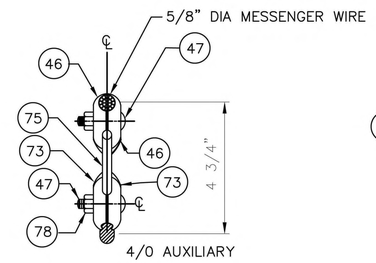

ASSEMBLY "JM"

NOT TO SCALE
HANGER ASSEMBLY

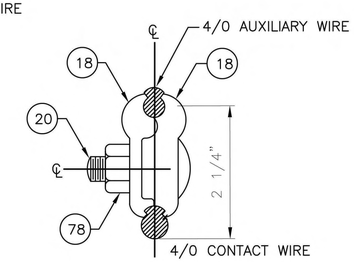

ASSEMBLY "H"

NOT TO SCALE
HANGER ASSEMBLY

BILL OF MATERIAL

ITEM	MARK	AMTRAK REF DWG	DESCRIPTION	QUANTITIES			
				ASSY ME	ASSY J	ASSY JM	ASSY H
18	HC29A	ET–1029–E–10	CLIP, INTERMEDIATE, GROOVED WIRE TO GROOVED WIRE, ALUMINUM–BRONZE CASTING, ASTM B–148–52	–	–	–	2
20	SSB34	ET1–100	BOLT, CARRIAGE, SQUARE NECK, ROUND HEAD 1/2" X 1 5/8" 13 UNC–2A, 316 STAINLESS STEEL	–	–	–	1
46	BC24B	ET–1087–E–1	CLIP, 5/8" MESSENGER TO .34 DIA. ROD, BRONZE, BOLTED TYPE, SPEC. P117–6	–	2	2	–
47	SSB22	ET1–100	BOLT, CARRIAGE, SQUARE NECK, ROUND HEAD 1/2" X 2" 13 UNC–2A, 316 STAINLESS STEEL	1	2	2	–
48	0.34 ROD	ET–1096	0.34" DIA. HANGER ROD, BRONZE, 0.344LBS/FT, ORDERED BY LBS	A/R	A/R	–	–
73	BC26B	ET–1078E–6	CLIP, GROOVED WIRE TO 0.34" DIA. ROD, BRONZE, ASTM B–48	2	2	2	–
74	FHS	ET–652–E–10	SADDLE, FLEXIBLE HANGER, BRONZE CASTING	1	–	–	–
75	JR	ET–1095E–2	HANGER RING, 0.34" DIA. ROD, BRONZE, 0.344LBS/FT.	–	–	1	–
78	–	ET1–100	NUT,W/ (2) LOCKING SLOTS & CL WASHER, 1/2 –13 UNC–2B, WASHER: 1.063" DIA., 316 STAINLESS STEEL	1	2	2	1

PLOT SCALE: AS SHOWN
5/13/2025 11:00:26 AM 43377-s-et-dt500.dwg

No.	Revisions	Date	By

AMTRAK

Office of Engineering
Engineering Design
National Railroad Passenger Corporation
30th Street Station, Philadelphia, Pennsylvania 19104

Approved	Date

COMMONWEALTH OF PENNSYLVANIA
REGISTERED PROFESSIONAL
MATTHEW JOHN SCHREFFLER
ENGINEER
PE096326

HNTB
HNTB Corporation
1650 Arch Street, Suite 1700
Philadelphia, PA 19103
215-568-6500

KEYSTONE CORRIDOR
I-83 RECONSTRUCTION EARLY ACTION
ELECTRIC TRACTION
CATENARY ASSEMBLIES (1 OF 8)

Designed PJC | Drawn JRT | Checked MJS | Date 06/13/2025

Job No. 43377
File Name 43377-s-et-dt500
Sheet No. 46 OF 77
Dwg. No. ET–500

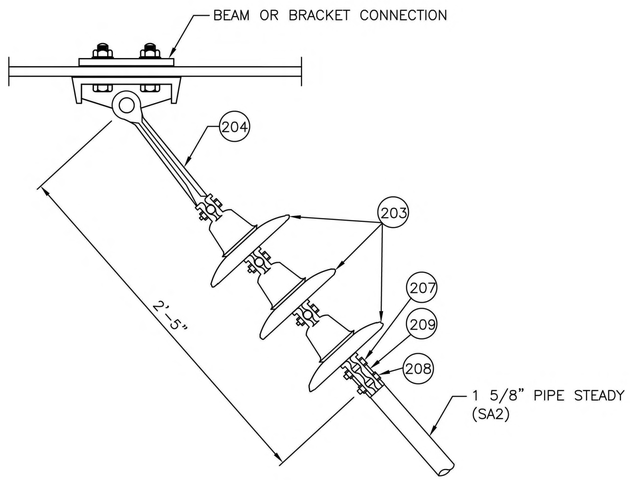

ASSEMBLY "NA35"

NOT TO SCALE
STEADY INSULATOR
TO BEAM ASSEMBLY

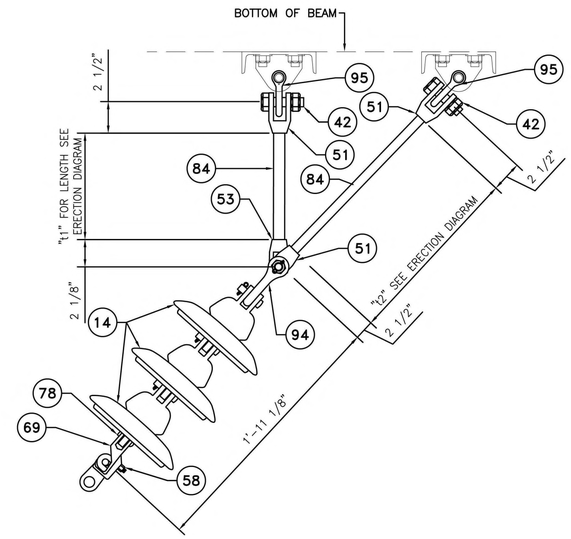

MESSENGER SUSPENSION INSULATOR NA27A (MOD)

SCALE: NOT TO SCALE
MESSENGER SUSPENSION TO BEAM ASSEMBLY

BILL OF MATERIAL

ITEM	MARK	AMTRAK REF DWG	DESCRIPTION	QUANTITY NA35
203	C	ET–1302D	INSULATOR, RIGID, TYPE C	3
204	XT17	ET–907E–1	STRAP, RIGID INSULATOR, 10 –9/32" LG, W/PIN & COTTER, M.I., GALV., SPEC P116–5 & P119–11	1
207	BG29	ET–145–E–24	BOLT, MACHINE 1/2" X 2–1/4", W/ 1 1/4" THD., 13 UNC–2A, STEEL, GALV., W/NUT & LOCK WASHER	1
208	BB55	ET–146–E–16	BOLT, MACHINE HEX HEAD 1/2 X 2–1/4 13 UNC–2A BRONZE SPECIAL W/NUT CLASS B, SPEC C.E.565	1
209	XC5	11B–1231–5	CLAMP, PIPE, M.I., GALV. (ADAPTER– CLAMP CONNECTS A PIPE 1 1/4" DIA. W/ 1 5/8"DIA.)	1

BILL OF MATERIAL

ITEM	MARK	DESCRIPTION	REFERENCE DRAWING	QTY NA27A
14	B1	INSULATOR, SUSPENSION, RR TYPE B1, CLEVIS 10" BELL, LAPP, CAT. #8100–70	ET–1302	3
42	BG1	BOLT,GALV. STEEL, 3/4"–10UNC–2Ax2 3/4" WITH NUT AND 3/16"x1 3/4" COTTER PIN	ET–145E	2
51	CE1	CLEVIS END, BRONZE, FOR HANGER ROD BRIDESBURG FOUNDRY	11B–1227	3
53	EE1	EYE END, BRONZE, FOR HANGER ROD BRIDESBURG FOUNDRY	11B–1227	1
58	JB	J–BOLT, 1/2"x2" 13 UNC–2A, BRONZE CLASS B WITH HEX NUT	ET–148E	2
69	MK1	MESSENGER HOOK, MI. GALV. VERNON MARTIN, CO.	ET–1146D	1
78	NP1	PIN, INSULATOR, 5/8"x1 7/8",GALV. STEEL WITH 3/16" BRZE COTTER PIN	11B–1206	1
84	NR2	ROD, .72"ø, BRONZE (LENGTH PER SED)	14E–433	2
94	S2	SHACKLE CHAIN WITH BOLT, NUT & COTTER	ET–305E	1
95	S4	SHACKLE, CHAIN, GALV. WITH 3/4"ø BOLT, NUT & 3/16" BRONZE COTTER PIN	ET–305E	2

No.	Revisions	Date	By

AMTRAK

Office of Engineering
Engineering Design
National Railroad Passenger Corporation
30th Street Station, Philadelphia, Pennsylvania 19104

Approved	Date

COMMONWEALTH OF PENNSYLVANIA
REGISTERED PROFESSIONAL ENGINEER
MATTHEW JOHN SCHROEFFLER
PE096326

HNTB
HNTB Corporation
1650 Arch Street, Suite 1700
Philadelphia, PA 19103
215–568–6500

KEYSTONE CORRIDOR
I–83 RECONSTRUCTION EARLY ACTION
ELECTRIC TRACTION
CATENARY ASSEMBLIES (2 OF 8)

Designed PJC | Drawn JRT | Checked MJS | Date 06/13/2025

Job No.	43377
File Name	43377–s–et–dt501
Sheet No.	47 OF 77
Dwg. No.	ET–501

PLOT SCALE: AS SHOWN
3/5/2025 4:10:51 PM
43377–s–et–dt501.dwg

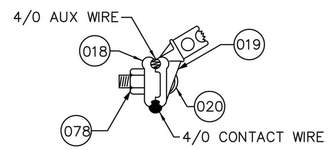

1 DETAIL

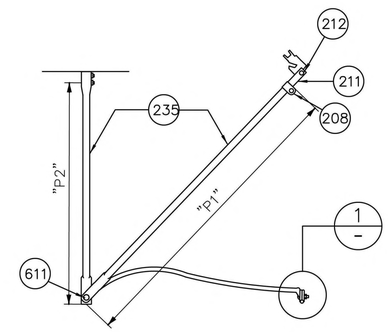

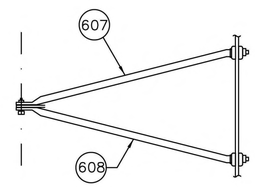

ASSEMBLY POA70
NOT TO SCALE

BILL OF MATERIAL

ITEM	MARK	AMTRAK REF DWG	DESCRIPTION	QUANTITIES POA70
018	HC29A	ET–1029–E–10	CLIP, INTERMEDIATE, GROOVED WIRE TO GROOVED WIRE, ALUMINUM–BRONZE CASTING, ASTM B–148–52	2
019	BC20	ET–1094–E–2	CLIP, TROLLEY WIRE, PULLOFF, BOLTED TYPE, BZ, G&H SPEC P117–6	2
020	SSB34	ET1–100	BOLT, CARRIAGE, SQUARE NECK, ROUND HEAD 1/2" X 1 5/8" 13 UNC–2A, 316 STAINLESS STEEL	2
078	–	ET1–100	NUT, W/ (2) LOCKING SLOTS & CL WASHER, 1/2 –13 UNC–2B, WASHER: 1.063" DIA., 316 STAINLESS STEEL	2
208	BB55	ET–146E–16	BOLT, MACHINE HEX HEAD 1/2 X 2–1/4 13 UNC–2A BRONZE SPECIAL W/NUT CLASS B, SPEC C.E.565	1
211	XC12	ET–912E–4	FULCRUM, CATENARY, STEADY, XC–12 MI GALV, BRIDESBURG FOUNDRY XC–12	1
212	BB8	ET–146–E	BOLT, BRONZE (3/4" DIA X 2 3/4") W NUT & LOCKWASHER BOLT, MACHINE 3/4" – 10 X 2–3/4" UNC–2A CLASS B, SPEC C.E.565	1
235	TUBE "S"	ET–1097–E–2	TUBING, BRONZE 1.625"OD X 0.165" WALL ALLOY 651 HARD TEMPER ASTMB–315 F/E.T. DEPT. CATENARY ASSYS. (COORDINATE ORDER WITH ITEM 210)	A/R
607	POL4	14B–63–6	PULL OFF CATENARY TROLLEY BRONZE (L) UNITED KNITTING # 180–05831–L INCLUDING FACE CLIP BC–20	1
608	POR4	14B–63–6	PULL OFF CATENARY TROLLEY BRONZE (R) UNITED KNITTING 180–05831R INCLUDING FACE CLIP BC–20	1
611	BB6	ET–146–E16	BOLT, HEX HEAD 5/8 X 3", 11 UNC–2A BZ., W/NUT & 3/16 X 1 1/2 COTTER PIN BRONZE, SPECIAL, CLASS B, SPEC C.E.565	1

PLOT SCALE: AS SHOWN
9/6/2024 2:05:09 PM 43377–s–et–dt502.dwg

No.	Revisions	Date	By

AMTRAK

Office of Engineering
Engineering Design
National Railroad Passenger Corporation
30th Street Station, Philadelphia, Pennsylvania 19104

Approved	Date

COMMONWEALTH OF PENNSYLVANIA
REGISTERED PROFESSIONAL ENGINEER
MATTHEW JOHN SCHREFFLER
PE096326

HNTB
HNTB Corporation
1650 Arch Street, Suite 1700
Philadelphia, PA 19103
215–568–6500

KEYSTONE CORRIDOR
I–83 RECONSTRUCTION EARLY ACTION
ELECTRIC TRACTION
CATENARY ASSEMBLIES (3 OF 8)

Designed PJC | Drawn PJC | Checked MJS | Date 06/13/2025

Job No. 43377
File Name 43377–s–et–dt502
Sheet No. 48 OF 77
Dwg. No. ET–502

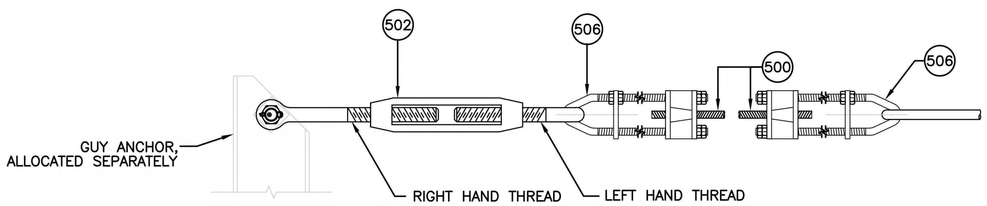

GUY STRAND ASSEMBLY G–1

BILL OF MATERIAL

ITEM	MARK	AMTRAK REF DWG	DESCRIPTION	QUANTITY G–1
500	–	–	CABLE, GUY WIRE, 1 IN. DIA., 37 STRAND, EXTRA HI STRENGTH STEEL STRAND MIN. BREAKING LOAD 102,700 LBS. GALV. PER ASTM A–475, 1000 LF/REEL	A/R
502	–	–	TURNBUCKLE, FORGED STEEL, GALV. W/EYE & CLEVIS, 2"X24" CROSBY HG–227	1
506	–	–	VARI–GRIP DEAD END CAT.NO. VG–18–2105, PREFORMED LINE PRODUCTS	2

PLOT SCALE: AS SHOWN
9/3/2024 4:39:16 PM
43377–s–et–dtl504.dwg

No.	Revisions	Date	By

AMTRAK

Office of Engineering
Engineering Design
National Railroad Passenger Corporation
30th Street Station, Philadelphia, Pennsylvania 19104

Approved	Date

COMMONWEALTH OF PENNSYLVANIA
REGISTERED PROFESSIONAL ENGINEER
MATTHEW JOHN SCHROEFFLER
PE096326

HNTB
HNTB Corporation
1650 Arch Street, Suite 1700
Philadelphia, PA 19103
215–568–6500

KEYSTONE CORRIDOR
I–83 RECONSTRUCTION EARLY ACTION
ELECTRIC TRACTION
CATENARY ASSEMBLIES (4 OF 8)

Designed PJC | Drawn JRT | Checked MJS | Date 06/13/2025

Job No. 43377
File Name 43377–s–et–dtl504
Sheet No. 49 OF 77
Dwg. No. ET–503

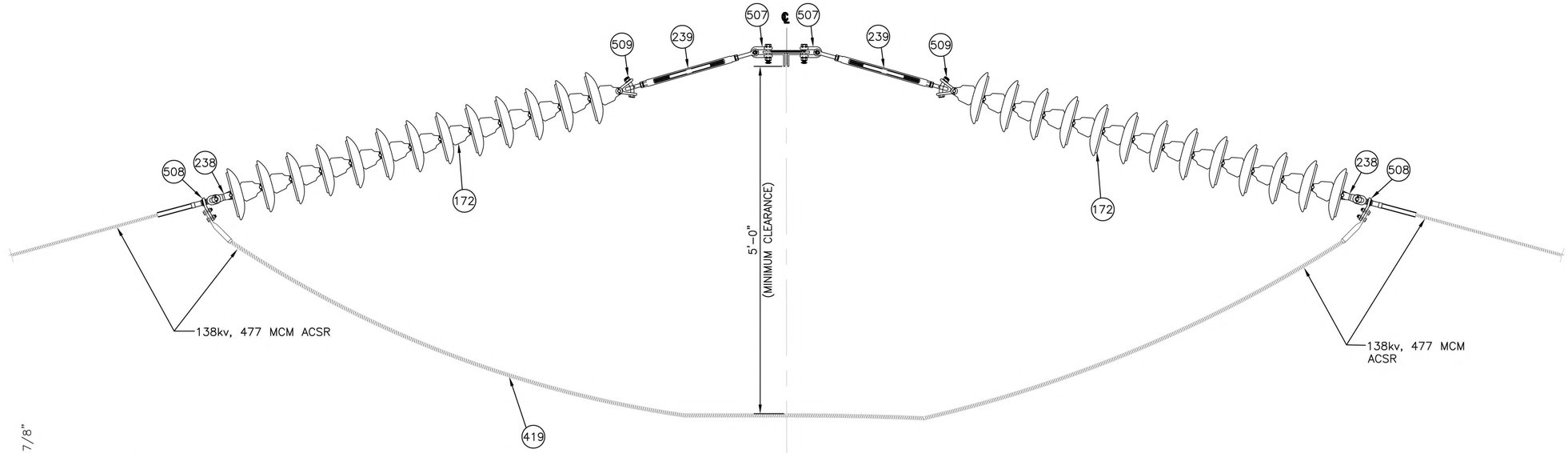

TRANSMISSION DOUBLE DEAD-END ASSEMBLY – "TDA-477A"

NOT TO SCALE

BILL OF MATERIAL				
ITEM	MARK	REFERENCE DRAWING	DESCRIPTION	QTY
50	CC55A	AET-2002	ADAPTER CLEVIS, 3 1/2"x1 9/16"x13/16" WITH 5/8" HOLE, ULT. STR. 30,000#	2
172	A2	ET-1302	PORCELAIN SUSPENSION, BELL, INSULATOR, 36kv LAPP, CAT. #97503-70	26
239	–	–	TURNBUCKLE, 1"x18", JAW-EYE TYPE, ANDERSON, CAT. TB-1-JE-18	2
419	–	–	477 MCM, 26/7 ACSR, 138kv CONDUCTOR	35'
507	–	–	ANCHOR SHACKLE, S.S. WITH BOLT, NUT AND COTTER, MACLEAN PWR SYS, #ASH-66-BC	2
508	–	–	DEAD END, COMPRESSION, VERT. EYE TYPE SINGLE TONGUE, 477 ACSR 26/7, #VES105	2
509	–	–	Y-CLEVIS EYE, 30K LBS. STRENGTH, MACLEAN POWER SYSTEM, CAT. RYCE-65-625A	2

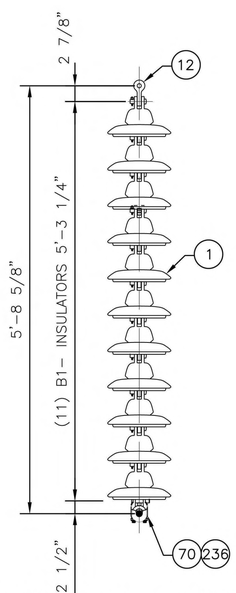

TRANSMISSION SUSPENSION ASSEMBLY – "TSA-477"

NOT TO SCALE

BILL OF MATERIAL				
ITEM	MARK	REFERENCE DRAWING	DESCRIPTION	QTY
1	B1	ET-1302	INSULATOR, SUSPENSION, RR TYPE B1, CLEVIS 10" BELL, LAPP, CAT. #8100-70	11
12	S4	ET-305E	SHACKLE,CHAIN,GALV., W/ 3/4"ø BOLT, NUT &3/16" BRZE. COTTER PIN,PER SPEC. P-119	1
70	–	–	SUSPENSION SADDLE, ALUMINUM, FOR 477 ACSR, MACLEAN PWR. SYS., CAT. LS-6-N	1
236	–	–	ARMOR ROD, FOR 477 ACSR PREFORMED LINE PRODUCT, CAT. #AR-0134	1

43377-s-et-dt506.dwg
PLOT SCALE: AS SHOWN
9/6/2024 1:45:19 PM

No.	Revisions	Date	By

AMTRAK

Office of Engineering
Engineering Design
National Railroad Passenger Corporation
30th Street Station, Philadelphia, Pennsylvania 19104

Approved	Date

COMMONWEALTH OF PENNSYLVANIA
REGISTERED PROFESSIONAL
MATTHEW JOHN SCHREFFLER
ENGINEER
PE096326

HNTB
HNTB Corporation
1650 Arch Street, Suite 1700
Philadelphia, PA 19103
215-568-6500

KEYSTONE CORRIDOR
I-83 RECONSTRUCTION EARLY ACTION
ELECTRIC TRACTION
CATENARY ASSEMBLIES (5 OF 8)

Designed PJC | Drawn JRT | Checked MJS | Date 06/13/2025

Job No. 43377
File Name 43377-s-et-dt506
Sheet No. 50 OF 77
Dwg. No. ET-504

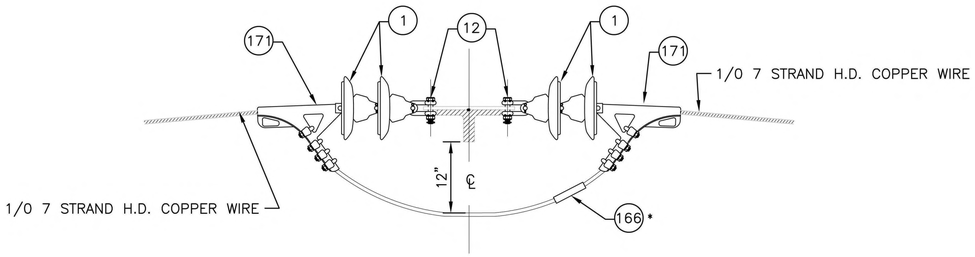

SIGNAL POWER DOUBLE DEAD END ASSEMBLY – NA12

NOT TO SCALE
(* INSTALL WITH STANDARD HYSPLICE TOOL AND DIES)

BILL OF MATERIAL				
ITEM	MARK	REFERENCE DRAWING	DESCRIPTION	QTY
1	B1	ET–1302	INSULATOR, SUSPENSION, RR TYPE B1, CLEVIS 10" BELL, LAPP, CAT. #8100–70	4
12	S4	ET–305E	SHACKLE,CHAIN,GALV., W/ 3/4"ø BOLT, NUT &3/16" BRZE. COTTER PIN,PER SPEC. P–119	2
166	–	–	SPLICER,CABLE, FOR 1/O (7 STRAND) COPPER BURNDY, CAT. #YCS–25	1
171	–	–	DEAD END STRAIN CLAMP FOR 1/O–350MCM WIRE, BRONZE, ANDERSON, CAT. #BSD–68–N	2

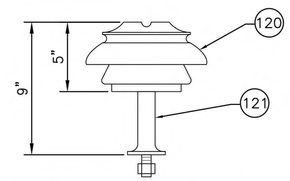

SIGNAL POWER INSULATOR ASSEMBLY – NA11

NOT TO SCALE

BILL OF MATERIAL				
ITEM	MARK	REFERENCE DRAWING	DESCRIPTION	QTY
120	S	ET–1302	INSULATOR, RR S TYPE, SPEC. 560B 1 3/8" PIN HOLE	1
121	–	ET–288	PIN, INSULATOR SUPPORT,"S" TYPE,1 3/8"ø x7", 3/4" STUD W/NUT & LOCKWASHER	1

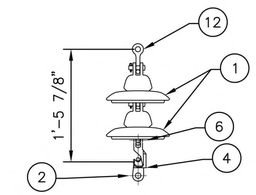

SIGNAL POWER INSULATOR ASSEMBLY – NA–61A

NOT TO SCALE

BILL OF MATERIAL				
ITEM	MARK	REFERENCE DRAWING	DESCRIPTION	QTY
1	B1	ET–1302	INSULATOR, SUSPENSION, RR TYPE B1, CLEVIS 10" BELL, LAPP, CAT. #8100–70	2
2	MK1	ET–1146D	MESSENGER HOOK, MI. GALV. VERNON MARTIN, CO.	1
4	JB	ET–148E	J–BOLT, 1/2"x2" 13 UNC–2A, BRONZE CLASS B WITH HEX NUT	2
6	NP1	11B–1206	PIN, INSULATOR, 5/8"x1 7/8",GALV. STEEL WITH 3/16" BRZE COTTER PIN	1
12	S4	ET–305E	SHACKLE,CHAIN,GALV., W/ 3/4"ø BOLT, NUT &3/16" BRZE. COTTER PIN,PER SPEC. P–119	1

PLOT SCALE: AS SHOWN
9/4/2024 10:38:23 PM 43377–s–et–dtl507.dwg

No.	Revisions	Date	By

AMTRAK

Office of Engineering
Engineering Design
National Railroad Passenger Corporation
30th Street Station, Philadelphia, Pennsylvania 19104

Approved	Date

COMMONWEALTH OF PENNSYLVANIA
REGISTERED PROFESSIONAL ENGINEER
MATTHEW JOHN SCHREFFLER
PE096326

HNTB
HNTB Corporation
1650 Arch Street, Suite 1700
Philadelphia, PA 19103
215–568–6500

KEYSTONE CORRIDOR
I–83 RECONSTRUCTION EARLY ACTION
ELECTRIC TRACTION
CATENARY ASSEMBLIES (6 OF 8)

Designed PJC | Drawn JRT | Checked MJS | Date 06/13/2025

Job No. 43377
File Name 43377–s–et–dtl507
Sheet No. 51 OF 77
Dwg. No. ET–505

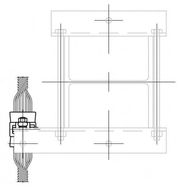

PLAN VIEW

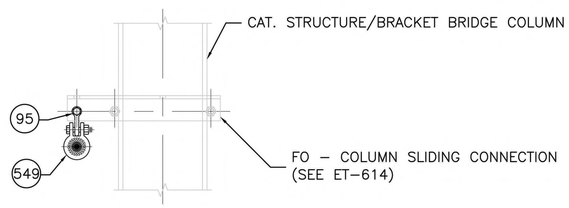

ADSS SUSPENSION ASSEMBLY – FOA–2

SCALE: 1"=1'–0"

BILL OF MATERIAL				
ITEM	MARK	REFERENCE DRAWING	DESCRIPTION	QTY
95	S4	ET–305E	SHACKLE,CHAIN,GALV., W/ 3/4"ø BOLT,NUT & 3/16" BRZE. COTTER PIN,PER SPEC. P–119	1
549	–	–	ADSS SUSPENSION BRACKET	1

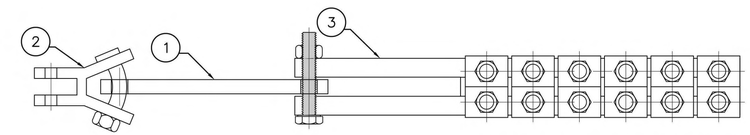

PLAN VIEW

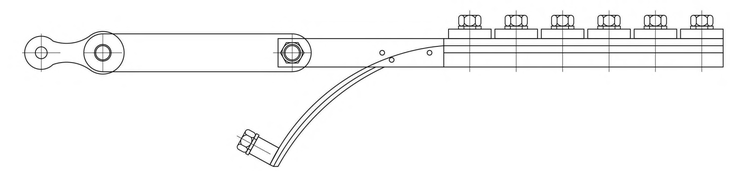

ADSS DOUBLE DEAD–END ASSEMBLY – FOA–3

SCALE: 3"=1'–0"

BILL OF MATERIAL				
ITEM	MARK	REFERENCE DRAWING	DESCRIPTION	QTY
1	–	–	LINK PLATE	2
2	–	–	Y–CLEVIS CLEVIS	2
3	–	–	BOLTED DEADEND	2

NOTES:

1. MAINTAIN MINIMUM 0'–6" CLEARANCE TO SIGNAL POWER CROSS ARM AND 10'–0" CLEARANCE TO TRANSMISSION.

PLOT SCALE: AS SHOWN
9/6/2024 2:26:59 PM
43377–s–et–dtl508.dwg

No.	Revisions	Date	By

AMTRAK

Office of Engineering
Engineering Design
National Railroad Passenger Corporation
30th Street Station, Philadelphia, Pennsylvania 19104

Approved	Date

COMMONWEALTH OF PENNSYLVANIA REGISTERED PROFESSIONAL ENGINEER MATTHEW JOHN SCHROEFFLER PE096326

HNTB
HNTB Corporation
1650 Arch Street, Suite 1700
Philadelphia, PA 19103
215–568–6500

KEYSTONE CORRIDOR
I–83 RECONSTRUCTION EARLY ACTION
ELECTRIC TRACTION
CATENARY ASSEMBLIES (7 OF 8)

Designed PJC | Drawn JRT | Checked MJS | Date 06/13/2025

Job No. 43377
File Name 43377–s–et–dtl508
Sheet No. 52 OF 77
Dwg. No. ET–506

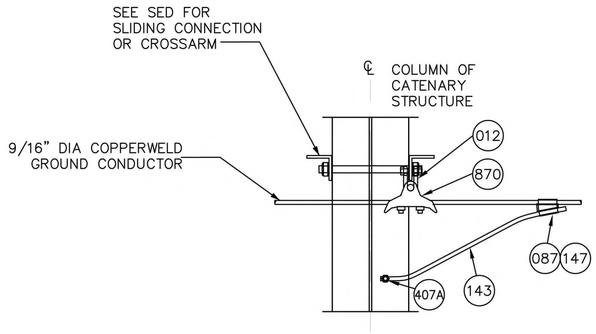

SWA–1

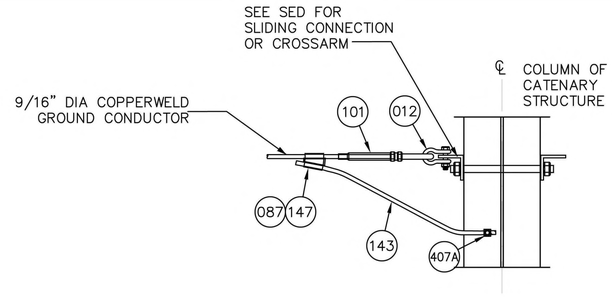

GWD–2A

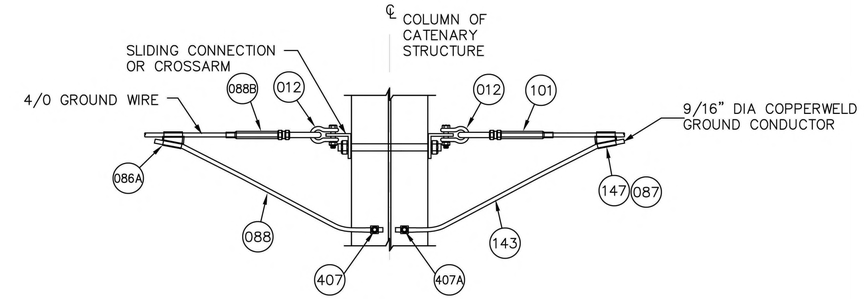

GWD–4

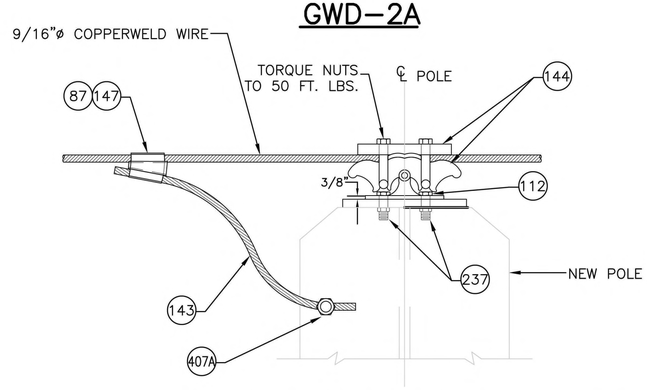

GROUND WIRE ASSEMBLY – GWS–2

NOT TO SCALE

BILL OF MATERIAL

ITEM	MARK	AMTRAK REF DWG	DESCRIPTION	QUANTITY			
				GWD–2A	GWD–4	GWS–2	SWA–1
012	S4	ET–305E	CHAIN SHACKLE, FORGED STEEL, GALV. WITH BOLT, NUT AND COTTER PIN	1	2	–	1
086A	–	–	TAP, CABLE WEDGE, 4/0 TO 4/0, CPI P/N 264115C	–	1	1	–
087	–	–	CARTRIDGE, WHITE FOR INSTALLATION OF COPPER TAPS, AMP#69338–5 (AUTOGEN 40–0100–01)	2	1	–	2
088	–	ET1–002	4/0 AWG COPPER 7 STRAND JUMPER, FT	–	A/R	–	–
088B	–	AET.10402	FORKED COLLAR SOCKET, FOR 4/0 7 STRAND COPPER WIRE, BODY: 316 STAINLESS STEEL, FLANGE: AL BRONZE ARTHUR FLURY AG, PART # 610.017.105	–	1	–	–
101	–	AET–2002	COMPRESSION EYE END, 9/16" COPPERWELD, NICOPRESS: 2957–M12	1	1	–	–
112	–	–	CLAMP, TRUNNION BASE FOR GROUND WIRE, MI, GALV, CAT. #57111	–	–	1	–
143	–	–	WIRE, ELE 9 AWG, 1 COND, 19 STRAND, 9/16" BARE COPPERWELD, 40% CONDUCTIVITY, 23,390 LB BREAKING LOAD	A/R	A/R	A/R	A/R
144	–	–	TRUNNION CLAMP, CAT. #47102	–	–	1	–
147	–	–	TAP, COPPER ALLOY, 9/16" DIA TO 9/16" DIA COMPOSITE (0.561" DIA TO 0.625" DIA) , AMP# 2–275187–8	2	1	1	2
237	–	–	BOLT, 1/2"–13UNC X 1 3/4", W/NUT, WASHER STEEL, GALV., TYPE A–325	–	–	2	–
407	KC28	–	SERVIT POST GROUND CONNECTOR, BURNDY KC–28	1	1	2	1
407A	KC28B1	–	SERVIT POST GROUND CONNECTOR, BURNDY KC–28	1	1	–	1
870	–	–	SADDLE, BRONZE SUSPENSION CLAMP ANDERSON BRS–60–N	–	–	–	1

PLOT SCALE: AS SHOWN
9/6/2024 2:06:04 PM 43377–s–et–dtl510.dwg

No.	Revisions	Date	By

AMTRAK

Office of Engineering
Engineering Design
National Railroad Passenger Corporation
30th Street Station, Philadelphia, Pennsylvania 19104

Approved	Date

COMMONWEALTH OF PENNSYLVANIA
REGISTERED PROFESSIONAL
MATTHEW JOHN SCHREFFLER
ENGINEER
PE096328

HNTB
HNTB Corporation
1650 Arch Street, Suite 1700
Philadelphia, PA 19103
215–568–6500

KEYSTONE CORRIDOR
I–83 RECONSTRUCTION EARLY ACTION
ELECTRIC TRACTION
CATENARY ASSEMBLIES (8 OF 8)

Designed PJC | Drawn PJC | Checked MJS | Date 06/13/2025

Job No. 43377
File Name 43377–s–et–dtl510
Sheet No. 53 OF 77
Dwg. No. ET–507

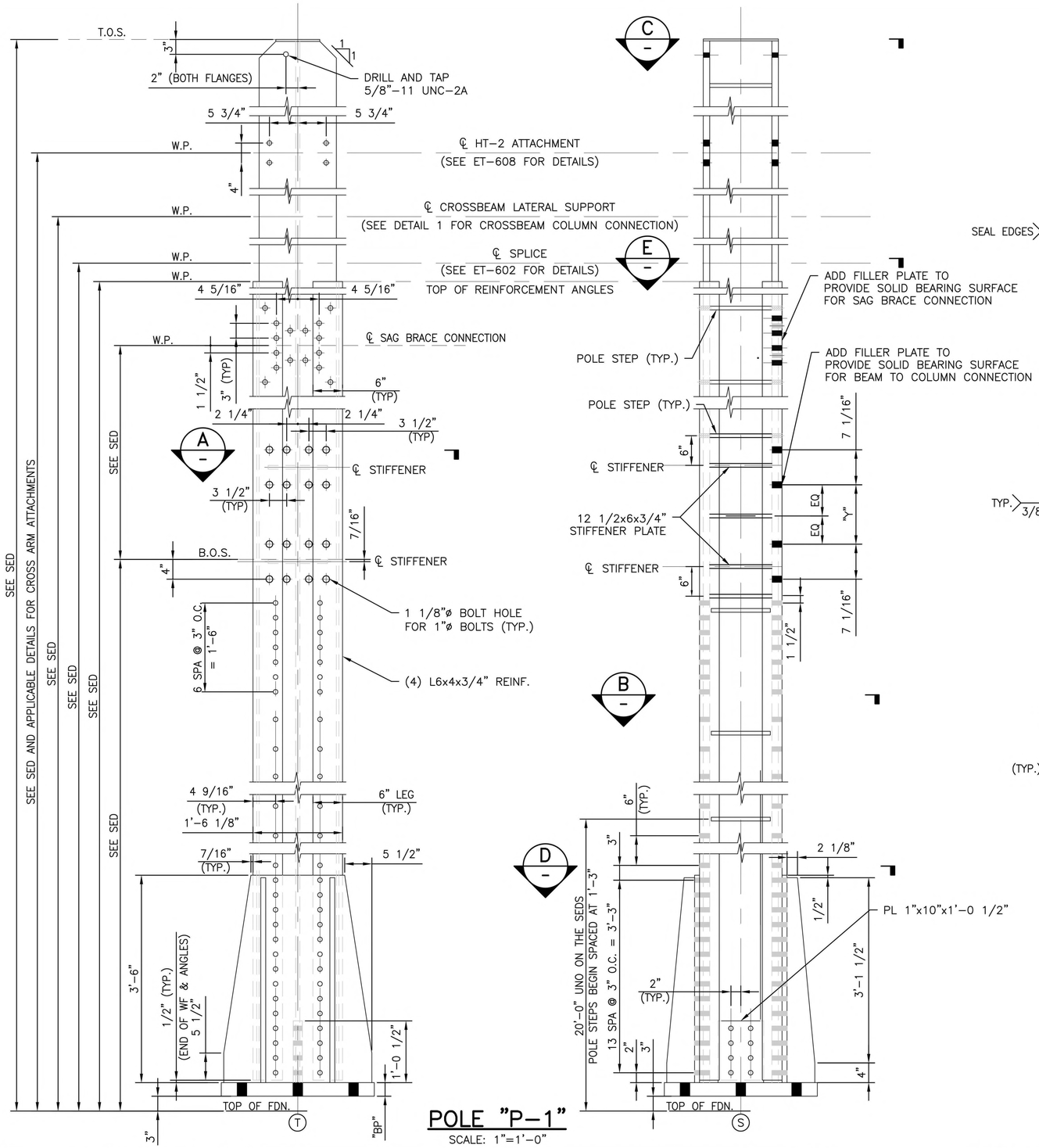

POLE "P-1"

SCALE: 1"=1'-0"

COLUMN SCHEDULE

MARK	SIZE	"Y"	"BP"	"TG"	"TS"	"DH"
P-1	W14X176	8 1/2"	3"	3/4"	3/4"	2 1/4"

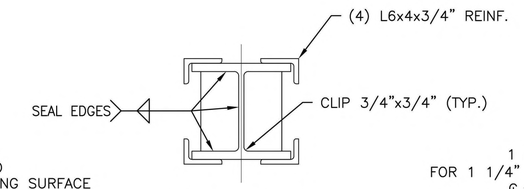

SECTION A

SCALE: 1"=1'-0"

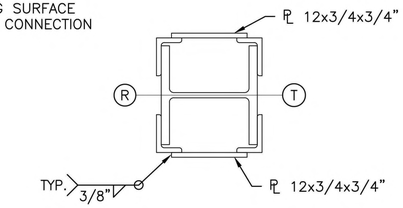

SECTION B

SCALE: 1"=1'-0"

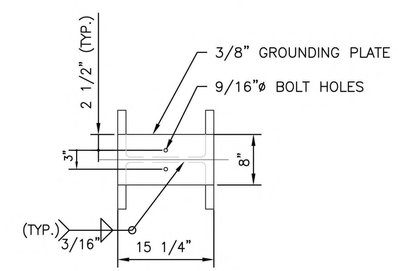

SECTION C

SCALE: 1"=1'-0"

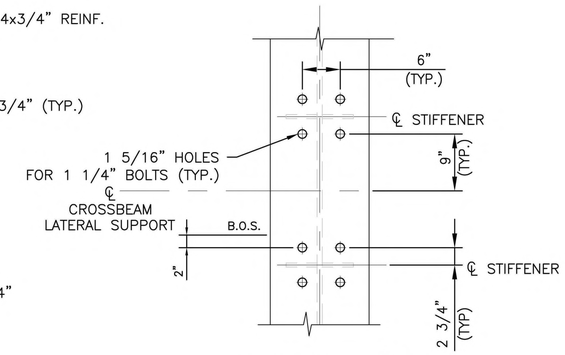

DETAIL 1

SCALE: 1"=1'-0"

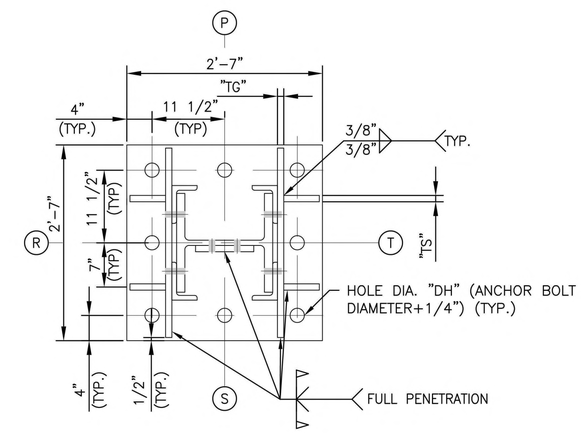

SECTION D

SCALE: 1"=1'-0"

NOTES:

1. FOR INDEX OF DRAWINGS, SEE DWG. ET-001.
   FOR GENERAL NOTES, SEE DWG. ET-002.
   FOR LEGEND & ABBREVIATIONS, SEE DWG. ET-003.
2. ALL HOLES 15/16"ø FOR 7/8"ø BOLT UNLESS NOTED OTHERWISE.
3. ALL BASE PLATES, STIFFENER PLATES, AND SPLICE PLATES SHALL CONFORM TO ASTM A572 GRADE 50.
4. FOR SAG BRACE CONNECTION BOLT HOLE PATTERN, SET DWG. ET-607.
5. GALVANIZATION PROCESS MUST ENSURE THAT INTENDED BOLTS WILL FIT INTO BOLT HOLES.

0 1 2
SCALE: 1" = 1'-0"

No.	Revisions	Date	By

AMTRAK

Office of Engineering
Engineering Design
National Railroad Passenger Corporation
30th Street Station, Philadelphia, Pennsylvania 19104

Approved	Date

COMMONWEALTH OF PENNSYLVANIA REGISTERED PROFESSIONAL ENGINEER MATTHEW JOHN SCHROEFFLER PE096326

HNTB
HNTB Corporation
1650 Arch Street, Suite 1700
Philadelphia, PA 19103
215-568-6500

KEYSTONE CORRIDOR
I-83 RECONSTRUCTION EARLY ACTION
ELECTRIC TRACTION

STEEL DETAILS (1 OF 16)

Designed	Drawn	Checked	Date
PJC	JRT	MJS	06/13/2025

Job No.	43377
File Name	43377-s-et-dt601
Sheet No.	54 OF 77
Dwg. No.	ET-600

PLOT SCALE: AS SHOWN
6/11/2025 1:47:58 PM
43377-s-et-dt601.dwg

COLUMN SCHEDULE						
MARK	SIZE	"Y"	"BP"	"TE"	"TS"	"DH"
P-2	W14X90	7 3/4"	2"	5/8"	1/2"	2 1/4"

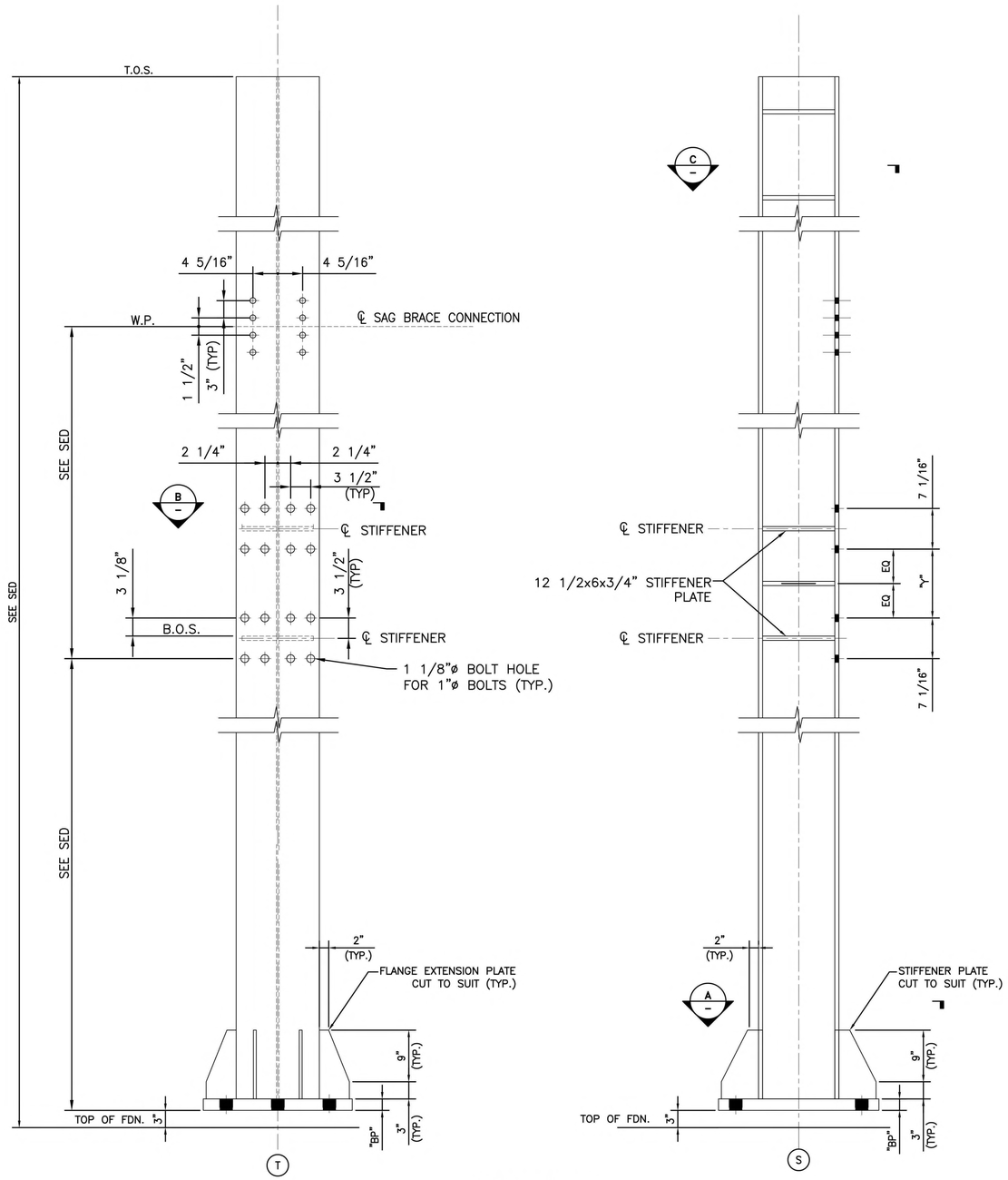

POLE "P-2"
SCALE 1"=1'-0"

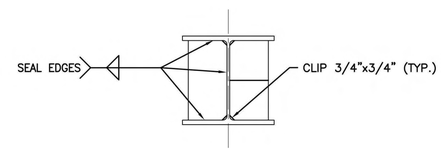

SECTION B
SCALE: 1"=1'-0"

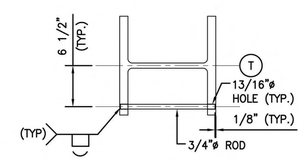

SECTION C
SCALE: 1"=1'-0"

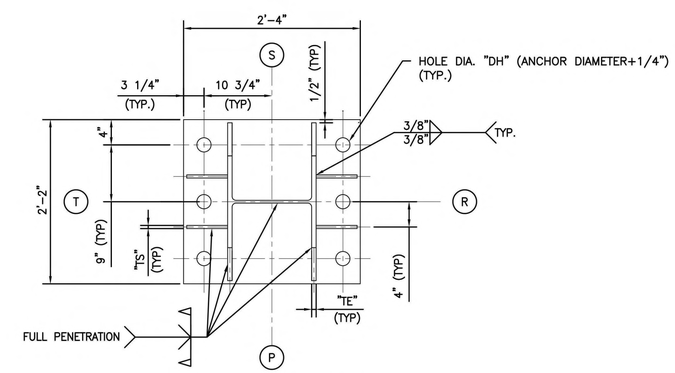

SECTION A
SCALE: 1"=1'-0"

NOTES:

1. ALL HOLES 15/16"ø FOR 7/8"ø BOLT UNLESS NOTED OTHERWISE.
2. ALL BASE PLATES, STIFFENER PLATES, AND SPLICE PLATES SHALL CONFORM TO ASTM A572 GRADE 50.
3. SEE SHEET ET-603 FOR COLUMN-BEAM CONNECTION CONNECTION DETAILS.
4. GALVANIZATION PROCESS MUST ENSURE THAT INTENDED BOLTS WILL FIT INTO BOLT HOLES

No.	Revisions	Date	By

AMTRAK

Office of Engineering
Engineering Design
National Railroad Passenger Corporation
30th Street Station, Philadelphia, Pennsylvania 19104

Approved	Date

COMMONWEALTH OF PENNSYLVANIA REGISTERED PROFESSIONAL ENGINEER MATTHEW JOHN SCHREFFLER PE096328

HNTB
HNTB Corporation
1650 Arch Street, Suite 1700
Philadelphia, PA 19103
215-568-6500

KEYSTONE CORRIDOR
I-83 RECONSTRUCTION EARLY ACTION
ELECTRIC TRACTION
STEEL DETAILS (2 OF 16)

Designed PJC | Drawn PJC | Checked MJS | Date 06/13/2025

Job No.	43377
File Name	43377-s-et-d0602
Sheet No.	55 OF 77
Dwg. No.	ET-601

PLOT SCALE: AS SHOWN
6/11/2025 1:47:49 PM
43377-s-et-d0602.dwg

SPLICE DATA TABLE					
MARK	COLUMN	PLATE DIMENSIONS (IN.)			N SPACES
		PP	PR	PH	
CS-176	W14X176	1"x15 1/2"x2'-7"	1"x6 5/8"x2'-7"	3/8"x7"x0'-9"	4

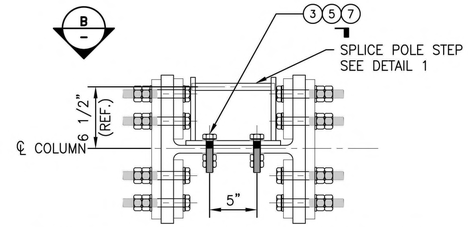

POLE STEP DETAIL AT SPLICE

SCALE 1 1/2"=1'-0"

BILL OF MATERIAL		
	ITEM	QUANTITIES
1	BOLT – 7/8X6 1/2"	80
2	BOLT – 7/8X4"	6
3	BOLT – 3/4X3 1/2"	4
4	NUT – 7/8"	172
5	NUT – 3/4"	8
6	WASHER – 7/8"	172
7	WASHER – 3/4"	8

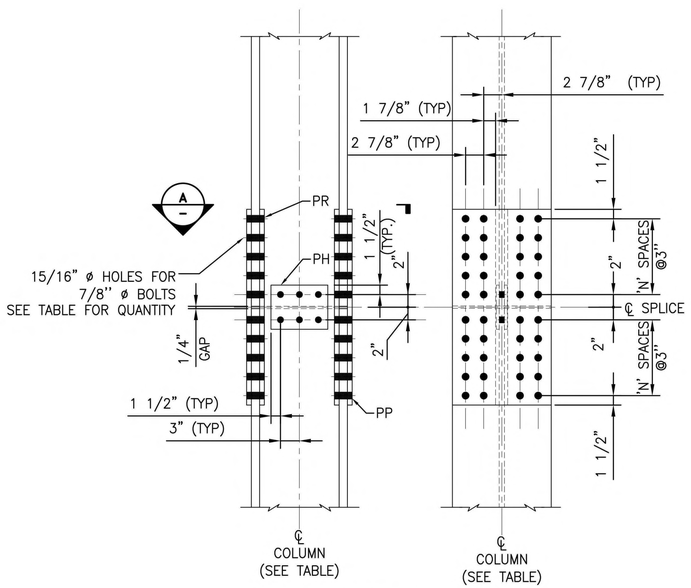

COLUMN SPLICE

SCALE: 1"=1'-0"

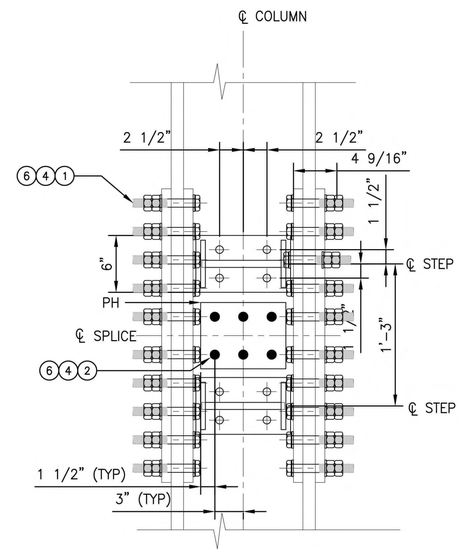

SECTION B

SCALE: 1 1/2"=1'-0"

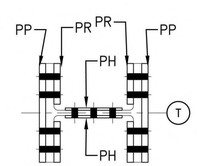

SECTION A

SCALE: 1 1/2"=1'-0"

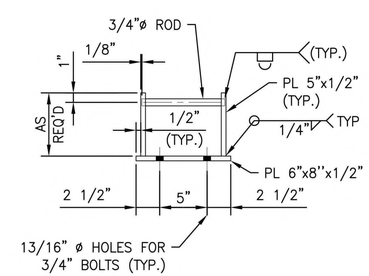

DETAIL 1

SCALE: 1"=1'-0"

NOTES:

1. FOR INDEX OF DRAWINGS, SEE DWG. ET-001.
   FOR GENERAL NOTES, SEE DWG. ET-002.
   FOR SYMBOLS & ABBREVIATIONS, SEE DWG. ET-003.
2. ALL HOLES 15/16"ø FOR 7/8"ø BOLT UNLESS NOTED OTHERWISE.
3. ALL BASE PLATES, STIFFENER PLATES, AND SPLICE PLATES SHALL CONFORM TO ASTM A572 GRADE 50.
4. FULL PEN. WELDS MUST BE AWS PREQUALIFIED COMPLETE JOINT PENETRATION.
5. GALVANIZATION PROCESS MUST ENSURE THAT INTENDED BOLTS WILL FIT INTO BOLT HOLES.

PLOT SCALE: AS SHOWN 43377-s-et-dt603.dwg
6/11/2025 1:47:39 PM

No.	Revisions	Date	By

AMTRAK

Office of Engineering
Engineering Design
National Railroad Passenger Corporation
30th Street Station, Philadelphia, Pennsylvania 19104

Approved	Date

COMMONWEALTH OF PENNSYLVANIA REGISTERED PROFESSIONAL MATTHEW JOHN SCHREFFLER ENGINEER PE096326

HNTB
HNTB Corporation
1650 Arch Street, Suite 1700
Philadelphia, PA 19103
215-568-6500

KEYSTONE CORRIDOR
I-83 RECONSTRUCTION EARLY ACTION
ELECTRIC TRACTION
STEEL DETAILS (3 OF 16)

Designed PJC | Drawn JRT | Checked MJS | Date 06/13/2025

Job No. 43377
File Name 43377-s-et-dt603
Sheet No. 56 OF 77
Dwg. No. ET-602

SHOP CAMBER & LOCATION OF STRUCTURE	
L	SHOP CAMBER
80.01' – 90'	5"
50.01' – 60'	3 1/4"

VARIABLE DIMENSION TABLE					
STRUCTURE NUMBER	STATION	BEAM SIZE	L	L1	Y
P–1661 1/2	5399+69	W14X145	90'–8 1/2"	24'–8 3/4"	8 1/2"
P–1662 1/2	5400+94	W14X90	89'–11 3/4"	55'–3"	7 3/4"
P–1663 1/2	5403+39	W14X145	58'–7 1/4"	–	8 1/2"

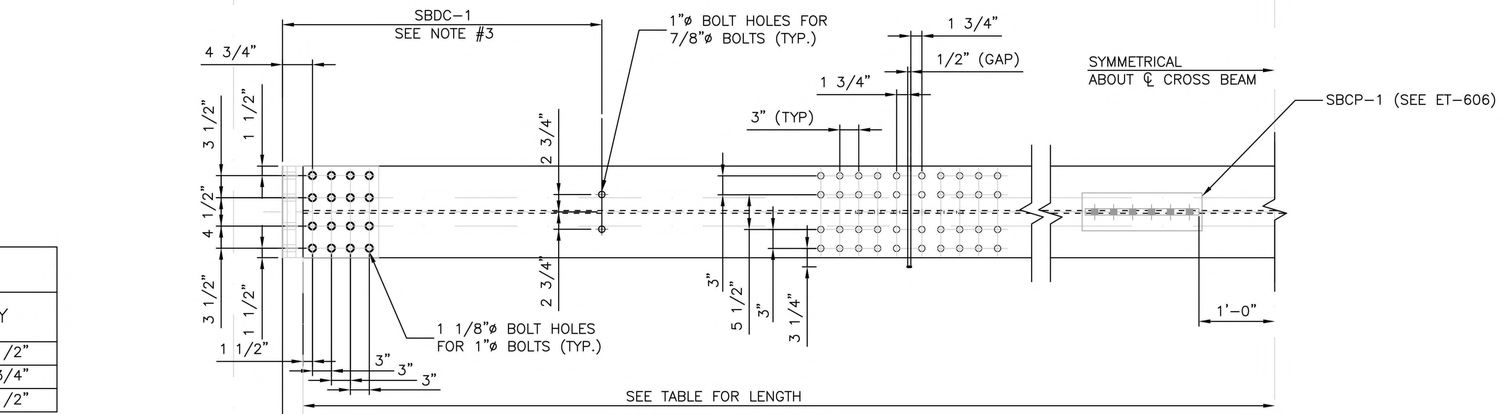

FACE OF COLUMN

SECTION B
SCALE: N.T.S.

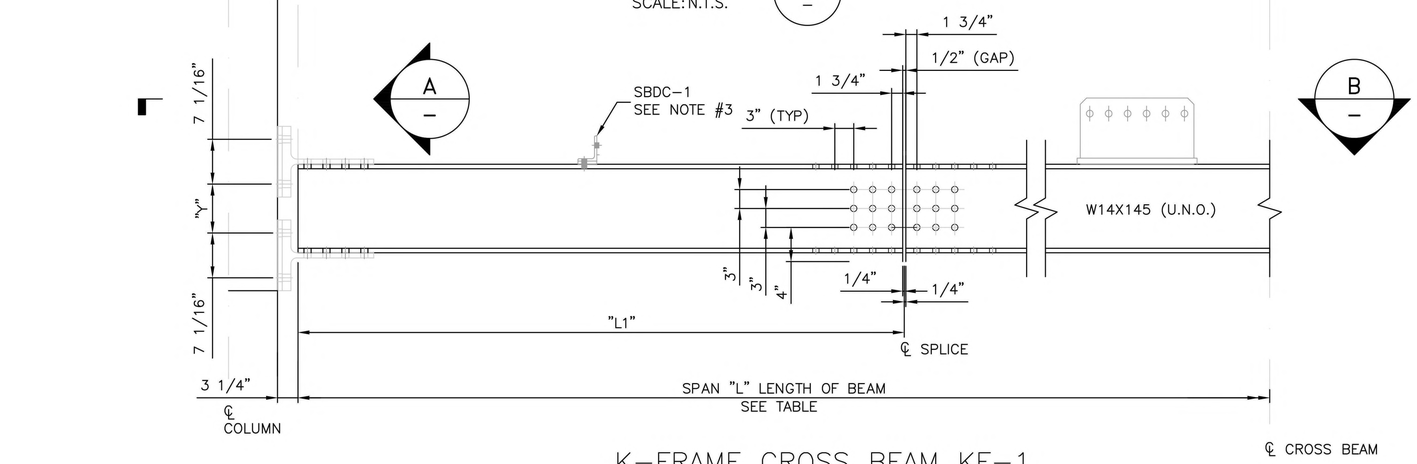

K–FRAME CROSS BEAM KF–1

(SEE ET–605 FOR ADDITIONAL DETAIL DUE TO SAG BRACE SB–1)

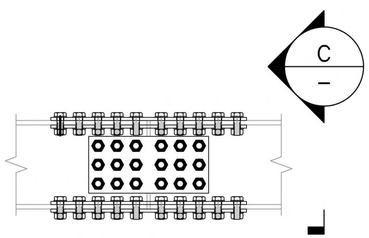

BEAM SPLICE DETAIL–SPLC–1

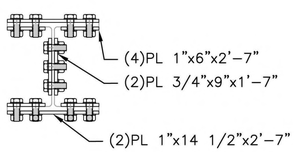

SECTION C
SCALE: N.T.S.

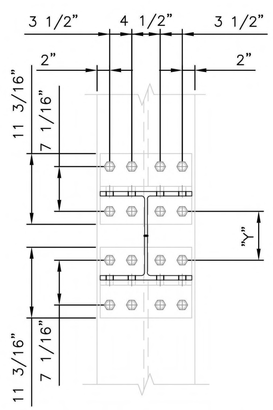

SECTION A
SCALE: N.T.S.

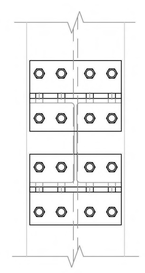

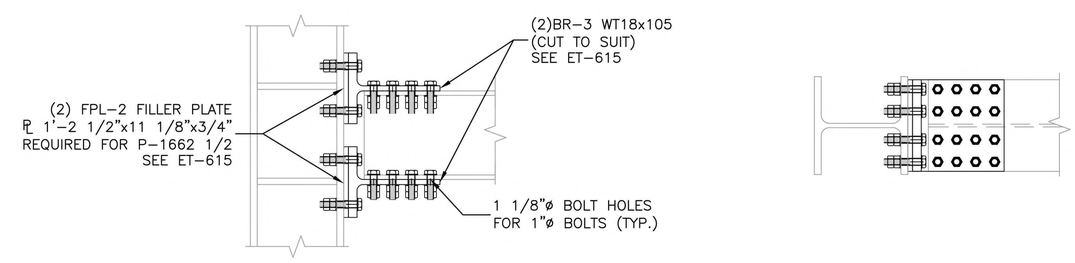

BEAM BRACKET DETAIL–BCC–2

(SEE ET–615 FOR ADDITIONAL DETAIL FOR BRACKET BR–3 AND FILLER PLATE FPL–2)

NOTES:

1. ALL BOLTS SHALL BE 7/8" ø HIGH STRENGTH BOLTS IN 15/16" ø HOLES, UNLESS OTHERWISE NOTED. ALL BOLTS TO HAVE HEXAGONAL HEAD AND SUPPLIED WITH HEX NUT AND PLAIN WASHER, UNLESS OTHERWISE NOTED.
2. LENGTHS "L" AND "L1" MUST BE VERIFIED IN FIELD AFTER FOUNDATIONS ARE INSTALLED PRIOR TO PREFABRIACTION.
3. BOLT HOLE PATTERN FOR SBDC–1 BEAM TO SAG BRACE DROPPER CONNECTION PROVIDED ON ET–605 AND ET–606.

PLOT SCALE: AS SHOWN
5/14/2025 11:45:43 AM 43377–s–et–dt1604.dwg

No.	Revisions	Date	By

AMTRAK

Office of Engineering
Engineering Design
National Railroad Passenger Corporation
30th Street Station, Philadelphia, Pennsylvania 19104

Approved	Date

COMMONWEALTH OF PENNSYLVANIA
REGISTERED PROFESSIONAL ENGINEER
MATTHEW JOHN SCHREFFLER
PE096326

HNTB
HNTB Corporation
1650 Arch Street, Suite 1700
Philadelphia, PA 19103
215–568–6500

KEYSTONE CORRIDOR
I–83 RECONSTRUCTION EARLY ACTION
ELECTRIC TRACTION
STEEL DETAILS (4 OF 16)

Designed	PJC	Drawn	JRT	Checked	MJS	Date	06/13/2025

Job No.	43377
File Name	43377–s–et–dt1604
Sheet No.	57 OF 77
Dwg. No.	ET–603

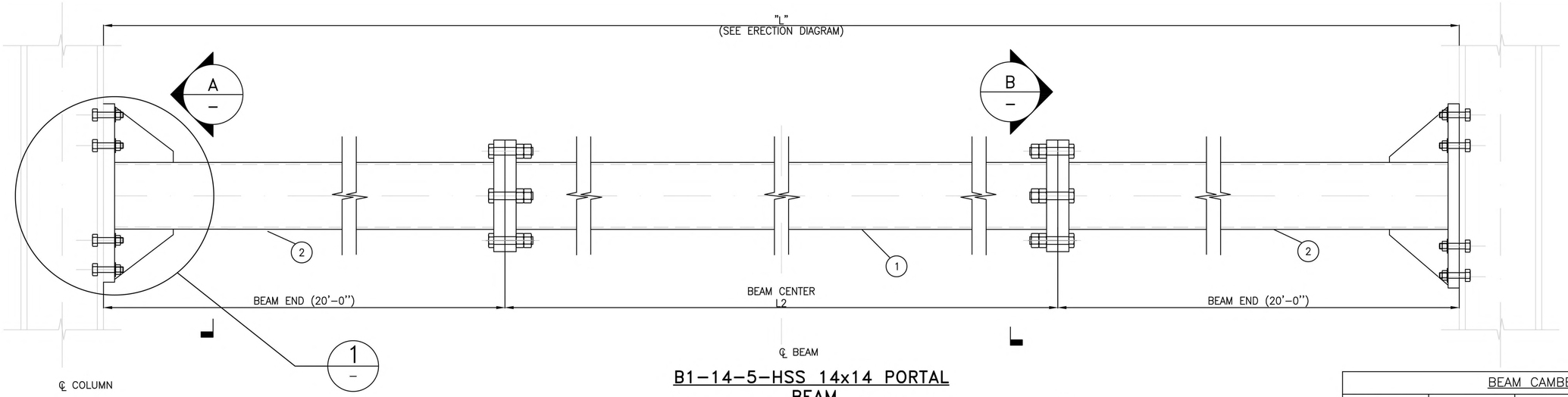

B1-14-5-HSS 14x14 PORTAL BEAM

SCALE N.T.S.

BEAM CAMBER SCHEDULE					
STRUCTURE	L	L2	SIZE	'C'	'R'
P-1663 1/2	55.01' TO 60'	15.01' TO 20'	HSS14x14x5/8	1 1/2"	4 1/4"
P-1661 1/2	90.01' TO 95'	50.01' TO 55'	HSS14x14x5/8	3"	6"

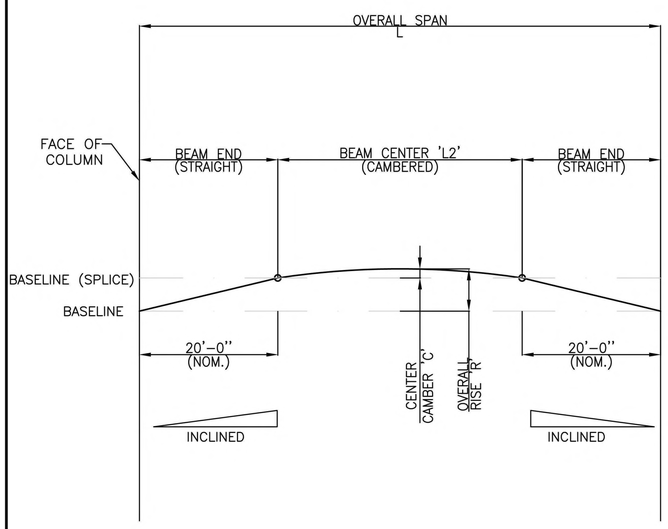

BEAM CAMBER DIAGRAM

SCALE N.T.S.

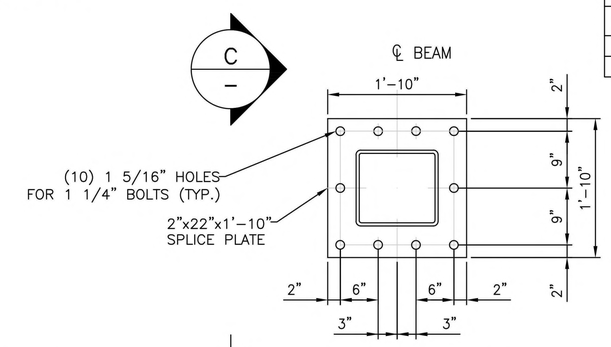

SECTION B

SCALE: N.T.S.

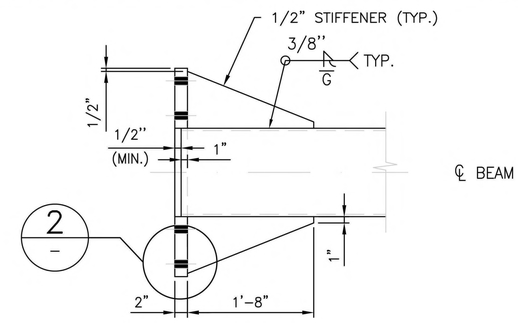

DETAIL 1

SCALE: N.T.S.

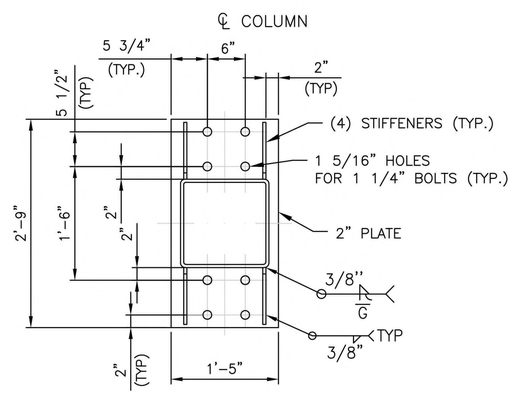

SECTION A

SCALE: N.T.S.

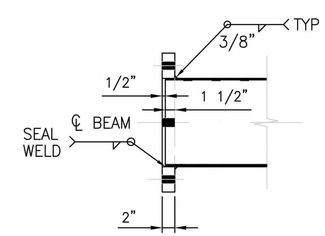

SECTION C

SCALE: N.T.S.

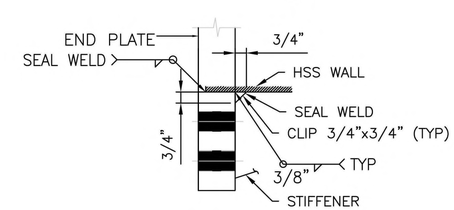

DETAIL 2

SCALE: N.T.S.

NOTES:

1. ALL BASE PLATES, STIFFENER PLATES, AND SPLICE PLATES SHALL CONFORM TO ASTM A572, GRADE 50.
2. BEAM FABRICATION SHALL NOT COMMENCE UNTIL FIELD VERIFICATION OF AS-BUILT FOUNDATION LOCATIONS HAS BEEN PERFORMED, AND FINAL DETERMINATION HAS BEEN MADE ON OVERALL BEAM SPAN "L".

No.	Revisions	Date	By

AMTRAK

Office of Engineering
Engineering Design
National Railroad Passenger Corporation
30th Street Station, Philadelphia, Pennsylvania 19104

Approved	Date

COMMONWEALTH OF PENNSYLVANIA REGISTERED PROFESSIONAL ENGINEER MATTHEW JOHN SCHREFFLER PE096326

HNTB
HNTB Corporation
1650 Arch Street, Suite 1700
Philadelphia, PA 19103
215-568-6500

KEYSTONE CORRIDOR
I-83 RECONSTRUCTION EARLY ACTION
ELECTRIC TRACTION
STEEL DETAILS (5 OF 16)

Designed PJC | Drawn PJC | Checked MJS | Date 06/13/2025

Job No. 43377
File Name 43377-s-et-dt604
Sheet No. 58 OF 77
Dwg. No. ET-604

PLOT SCALE: AS SHOWN
5/14/2025 11:45:43 AM 43377-s-et-dt604.dwg

SAG BRACE TYPE–SB1 SCHEDULE

MARK	ANGLE SIZE	ET–607	ET–607	ET–607	ET–607
		SBDS–1	SBCT–1	SBDC–1	SBCP–1
SB–1	(2) L6x4x1/2"	1	1	1	1

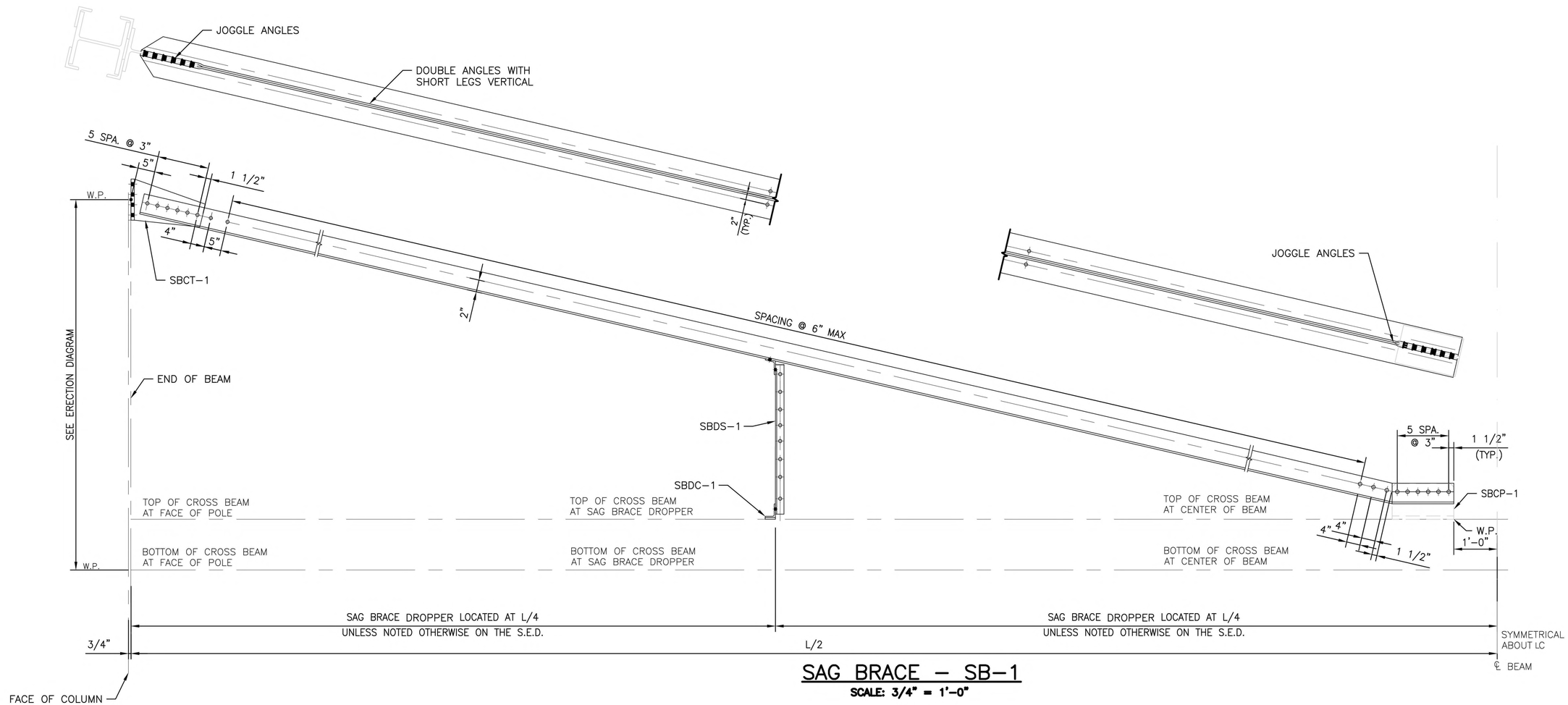

SAG BRACE – SB–1

SCALE: 3/4" = 1'–0"

No.	Revisions	Date	By

AMTRAK

Office of Engineering
Engineering Design
National Railroad Passenger Corporation
30th Street Station, Philadelphia, Pennsylvania 19104

Approved	Date

COMMONWEALTH OF PENNSYLVANIA REGISTERED PROFESSIONAL ENGINEER MATTHEW JOHN SCHREFFLER PE096328

HNTB

HNTB Corporation
1650 Arch Street, Suite 1700
Philadelphia, PA 19103
215–568–6500

KEYSTONE CORRIDOR
I–83 RECONSTRUCTION EARLY ACTION
ELECTRIC TRACTION

STEEL DETAILS (6 OF 16)

Designed	PJC	Drawn	JRT	Checked	MJS	Date	06/13/2025

Job No.	43377
File Name	43377–s–et–dt606
Sheet No.	59 OF 77
Dwg. No.	ET–605

PLOT SCALE: AS SHOWN
9/5/2024 2:35:32 PM
43377–s–et–dt606.dwg

SAG BRACE TYPE–SB–2 SCHEDULE

MARK	ANGLE SIZE	ET–607	ET–607	ET–607	ET–607
		SBDS–1	SBCT–1	SBDC–1	SBCP–1
SB–2	(2) L6x4x1/2"	2	1	1	1

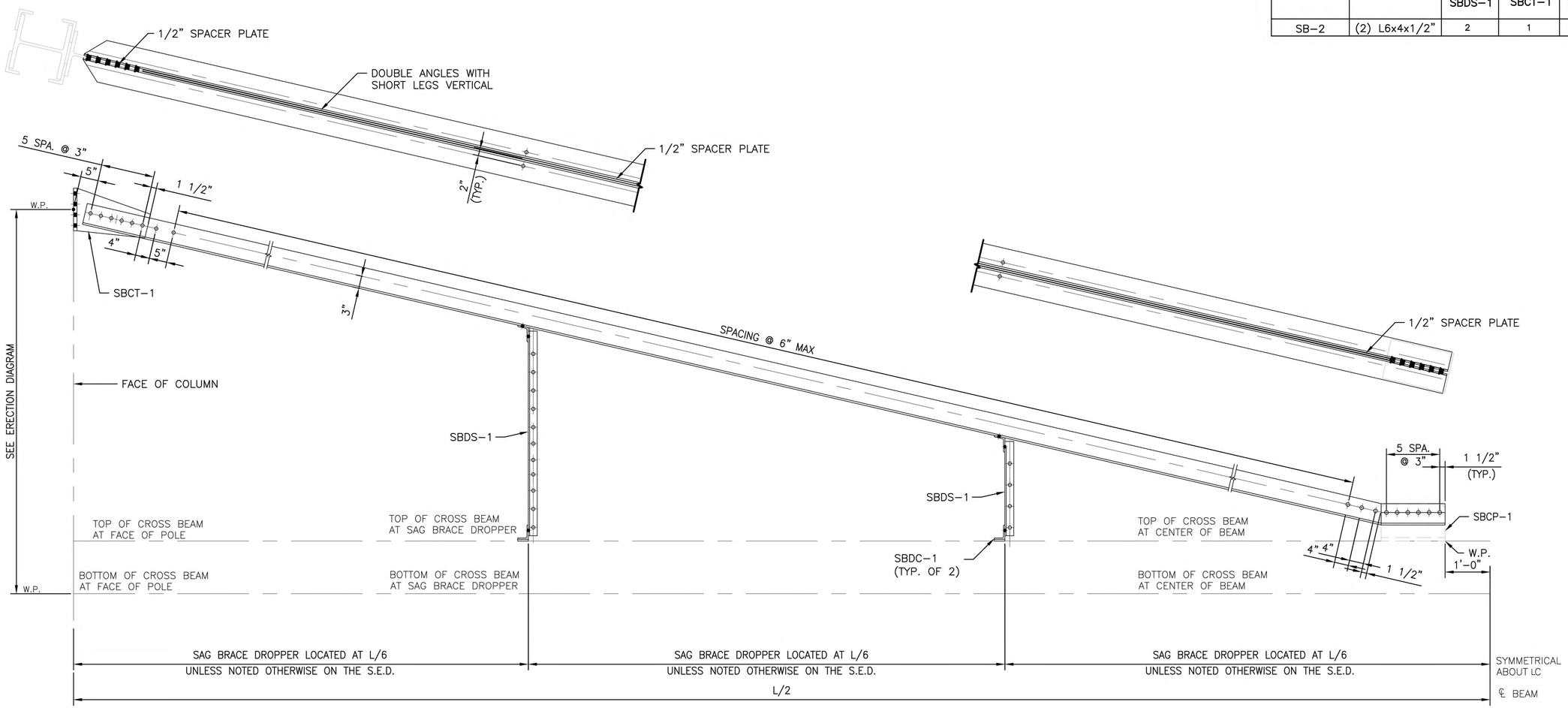

SAG BRACE – SB–2

SCALE: 3/4" = 1'–0"

No.	Revisions	Date	By

AMTRAK

Office of Engineering
Engineering Design
National Railroad Passenger Corporation
30th Street Station, Philadelphia, Pennsylvania 19104

Approved	Date

COMMONWEALTH OF PENNSYLVANIA REGISTERED PROFESSIONAL ENGINEER MATTHEW JOHN SCHREFFLER PE096326

HNTB
HNTB Corporation
1650 Arch Street, Suite 1700
Philadelphia, PA 19103
215–568–6500

KEYSTONE CORRIDOR
I–83 RECONSTRUCTION EARLY ACTION
ELECTRIC TRACTION
STEEL DETAILS (7 OF 16)

Designed PJC | Drawn PJC | Checked MJS | Date 06/13/2025

Job No. 43377
File Name 43377–s–et–dtl606
Sheet No. 60 OF 77
Dwg. No. ET–606

PLOT SCALE: AS SHOWN
9/5/2024 2:35:32 PM
43377–s–et–dtl606.dwg

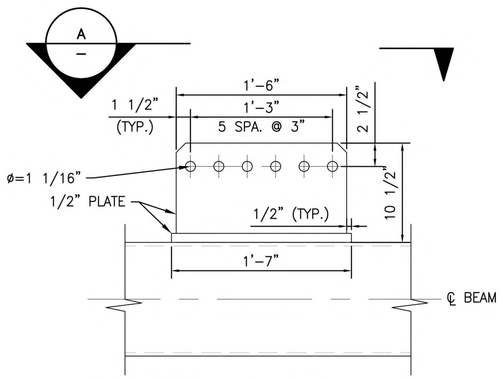

SAG BRACE BEAM CONNECTION PLATE ASSEMBLY – SBCP–1

SCALE: 1 1/2"=1'–0"

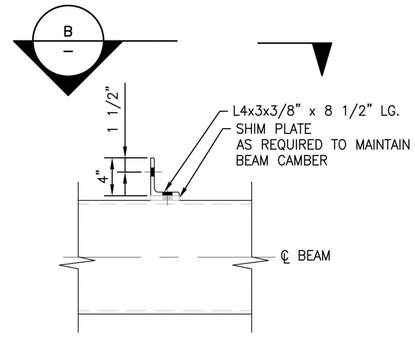

SAG BRACE DROPPER CONNECTION – SBDC–1

SCALE: 1 1/2"=1'–0"

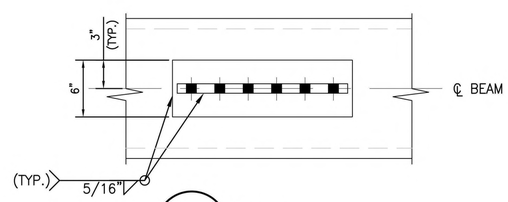

A VIEW

SCALE: 1 1/2"=1'–0"

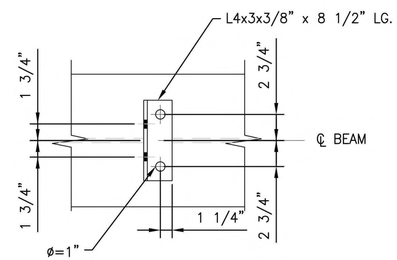

B VIEW

SCALE: 1 1/2"=1'–0"

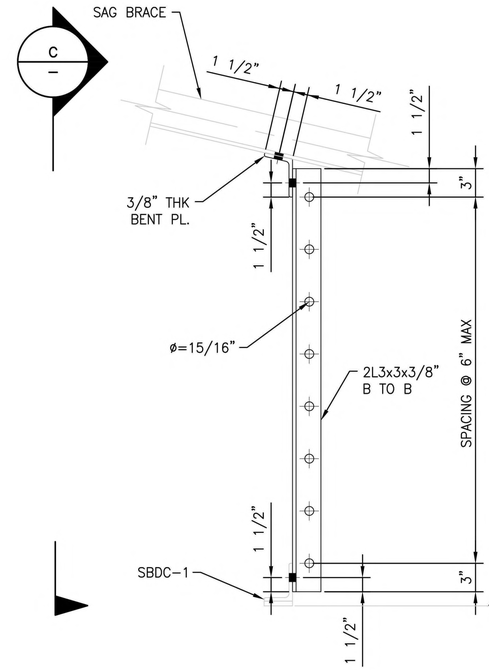

SAG BRACE DROPPER SBDS–1

SCALE: 1 1/2"=1'–0"

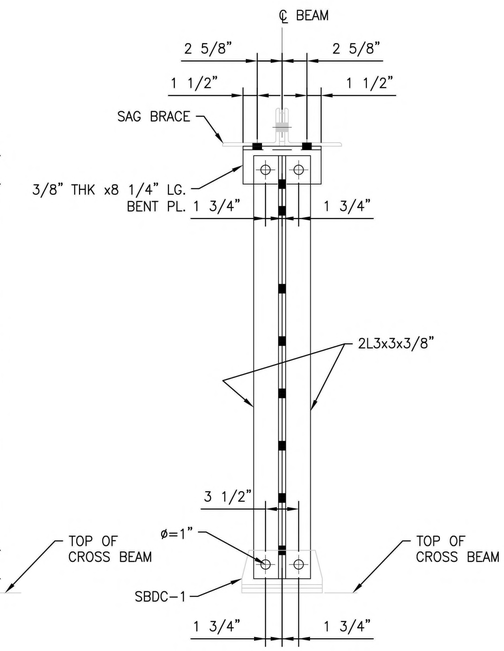

C SECTION

SCALE: 1 1/2"=1'–0"

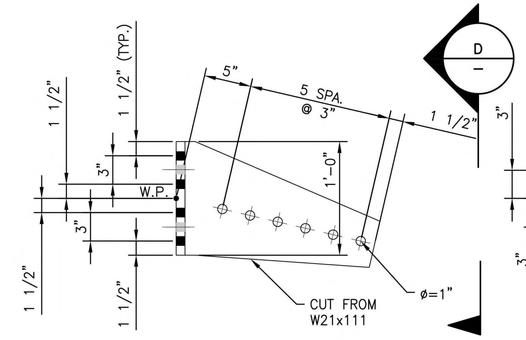

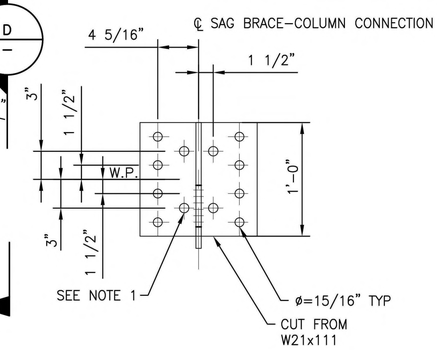

SAG BRACE COLUMN CONNECTION – SBCT–1

SCALE: 1 1/2"=1'–0"

D VIEW

SCALE: 1 1/2"=1'–0"

0 .5 1 2

SCALE: 1 1/2" = 1'–0"

NOTES:

1. FOUR HOLES CLOSEST TO WEB NOT NECESSARY FOR STRUCTURE P–1662 1/2..

No.	Revisions	Date	By

AMTRAK

Office of Engineering
Engineering Design
National Railroad Passenger Corporation
30th Street Station, Philadelphia, Pennsylvania 19104

Approved	Date

COMMONWEALTH OF PENNSYLVANIA REGISTERED PROFESSIONAL ENGINEER MATTHEW JOHN SCHREFFLER PE096326

HNTB

HNTB Corporation
1650 Arch Street, Suite 1700
Philadelphia, PA 19103
215–568–6500

KEYSTONE CORRIDOR
I–83 RECONSTRUCTION EARLY ACTION
ELECTRIC TRACTION

STEEL DETAILS (8 OF 16)

Designed	PJC	Drawn	JRT	Checked	MJS	Date	06/13/2025

Job No.	43377
File Name	43377–s–et–dt607
Sheet No.	61 OF 77
Dwg. No.	ET–607

PLOT SCALE: AS SHOWN
5/13/2025 3:59:21 PM
43377–s–et–dt607.dwg

TRANSMISSION CROSSARM HT–2 SCHEDULE

MARK	STRUCTURE NUMBER	COLUMN	COLUMN SIZE	"L1"	"L2"	ET–614	ET–613	ET–612	ET–613
						1	2	3	4
						PC–4	SPL–1	CC–1	DEP–1
HT–2	P–1660	SOUTH	14"WF103#	7'–6"	10'–6"	1	2	4	4
HT–2	P–1661	NORTH	14"WF119#	10'–6"	7'–6"	1	2	4	4
HT–2	P–1661 1/2	SOUTH	W14X176	8'–6"	8'–6"	1	2	4	4
HT–2	P–1661 1/2	NORTH	W14X176	10'–0"	7'–0"	1	2	4	4
HT–2	P–1663 1/2	SOUTH	W14X176	9'–9"	7'–9"	1	2	4	4
HT–2	P–1663 1/2	NORTH	W14X176	10'–9"	6'–3"	1	2	4	4
HT–2	P–1665	NORTH	14"WF119#	10'–6"	7'–6"	1	2	4	4

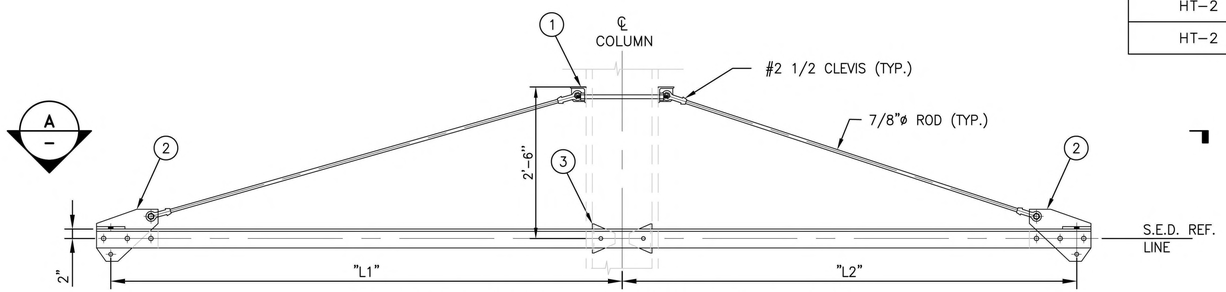

TRANSMISSION CROSSARM – HT–2

SCALE: 3/4"=1'–0"

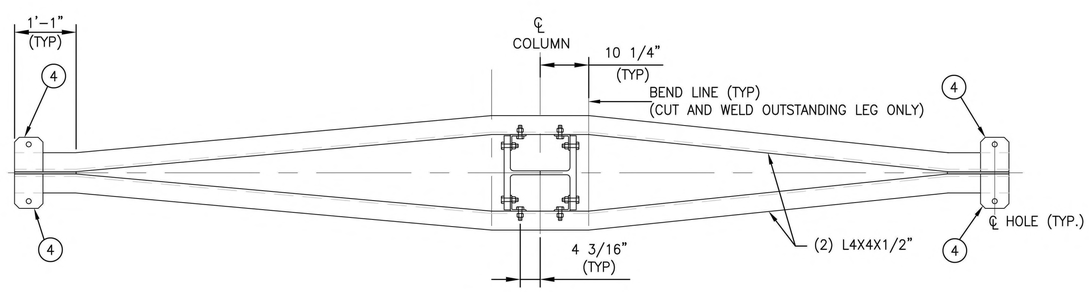

SECTION A –

SCALE: N.T.S.

NOTES

1. ALL HOLES ARE 15/16" ø FOR 7/8" ø BOLTS U.N.O.
2. CROSSARMS SHALL BE PERMANENTLY MARKED WITH THE IDENTIFYING NUMBER.
3. REFER TO DRAWING ET–600 FOR BOLT HOLE CONFIGURATION.

PLOT SCALE: AS SHOWN
5/19/2025 2:20:50 PM 43377–s–et–dt0609.dwg

No.	Revisions	Date	By

AMTRAK

Office of Engineering
Engineering Design
National Railroad Passenger Corporation
30th Street Station, Philadelphia, Pennsylvania 19104

Approved	Date

COMMONWEALTH OF PENNSYLVANIA REGISTERED PROFESSIONAL ENGINEER MATTHEW JOHN SCHROEFFLER PE096326

HNTB
HNTB Corporation
1650 Arch Street, Suite 1700
Philadelphia, PA 19103
215–568–6500

KEYSTONE CORRIDOR
I–83 RECONSTRUCTION EARLY ACTION
ELECTRIC TRACTION

STEEL DETAILS (9 OF 16)

Designed PJC | Drawn JRT | Checked MJS | Date 06/13/2025

Job No. 43377
File Name 43377–s–et–dt0609
Sheet No. 62 OF 77
Dwg. No. ET–608

SP CROSSARM SP–2 & SP–3 SCHEDULE

MARK	STRUCTURE NUMBER	COLUMN	COLUMN SIZE	"L1"	"L2"	ET–614	ET–613	ET–613	ET–613
						1	2	3	4
						PC–4	SPL–1	DEP–1	DEP–2
SP–2	P–1660	SOUTH	W14X103	4'–0"	4'–0"	–	–	–	4
SP–2	P–1665	SOUTH	14WF103	3'–6"	3'–6"	–	–	–	4
SP–3	P–1663 1/2	SOUTH	W14X176	4'–6"	4'–6"	1	2	4	–

NOTES

1. ALL HOLES SHALL BE 15/16"ø FOR 7/8"ø BOLTS. UNLESS NOTED OTHERWISE.
2. CROSSARM SHALL BE PERMANENTLY MARKED WITH IDENTIFYING MARK NUMBER.

A

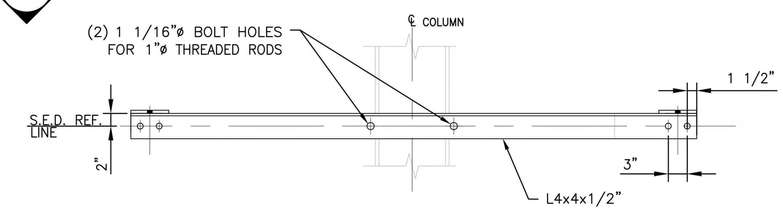

SIGNAL POWER DOUBLE DEAD–END CROSSARM– SP–2

SCALE: 1"=1'–0"

B

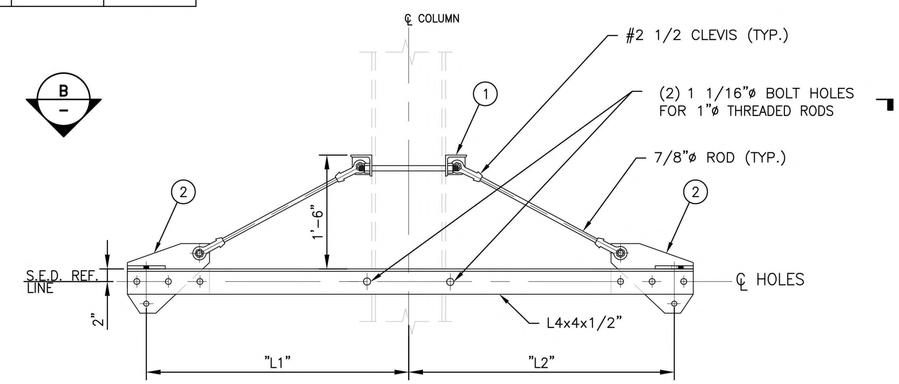

SIGNAL POWER CROSSARM – SP–3

SCALE: 1"=1'–0"

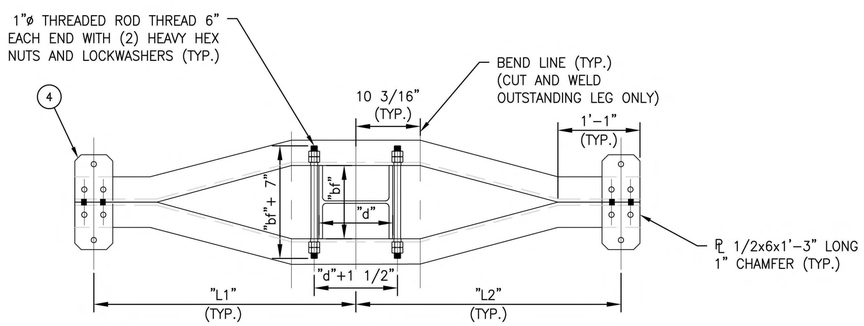

SECTION A

SCALE: 1"=1'–0"

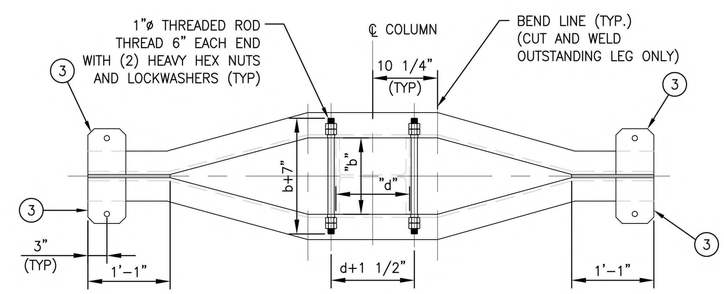

SECTION B

SCALE: 1"=1'–0"

No.	Revisions	Date	By

AMTRAK

Office of Engineering
Engineering Design
National Railroad Passenger Corporation
30th Street Station, Philadelphia, Pennsylvania 19104

Approved	Date

COMMONWEALTH OF PENNSYLVANIA REGISTERED PROFESSIONAL ENGINEER MATTHEW JOHN SCHROEFFLER PE096326

HNTB

HNTB Corporation
1650 Arch Street, Suite 1700
Philadelphia, PA 19103
215–568–6500

KEYSTONE CORRIDOR
I–83 RECONSTRUCTION EARLY ACTION
ELECTRIC TRACTION

STEEL DETAILS (10 OF 16)

Designed PJC | Drawn PJC | Checked MJS | Date 06/13/2025

Job No.	43377
File Name	43377–s–et–dt610
Sheet No.	63 OF 77
Dwg. No.	ET–609

PLOT SCALE: AS SHOWN
5/15/2025 3:57:43 PM
43377–s–et–dt610.dwg

SP CROSSARM SP-5 SCHEDULE

MARK	STRUCTURE NUMBER	COLUMN	COLUMN SIZE	"L1"	"L2"
SP-5	P-1661 1/2	SOUTH	W14X176	5'-0"	3'-6"

NOTES

1. ALL HOLES SHALL BE 15/16"ø FOR 7/8"ø BOLTS. UNLESS NOTED OTHERWISE.
2. CROSSARM SHALL BE PERMANENTLY MARKED WITH IDENTIFYING MARK NUMBER.

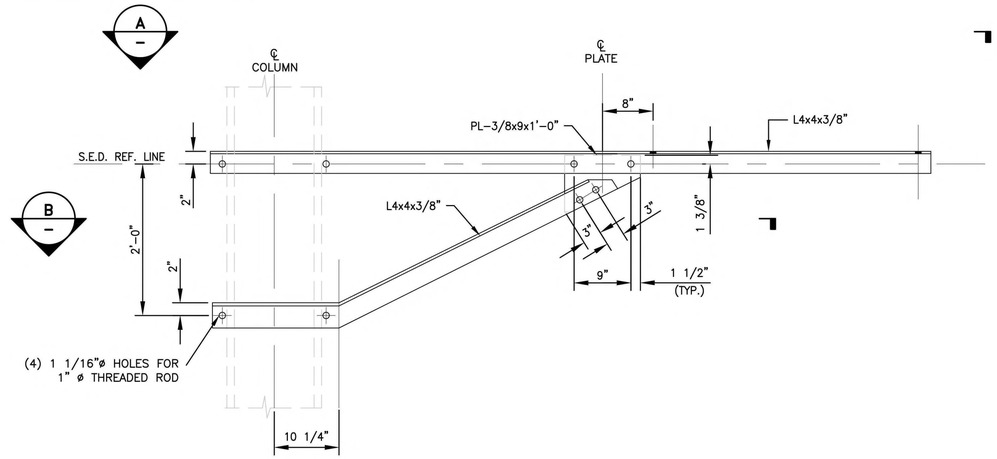

SIGNAL POWER CROSSARM – SP-5

SCALE: 1"=1'-0"

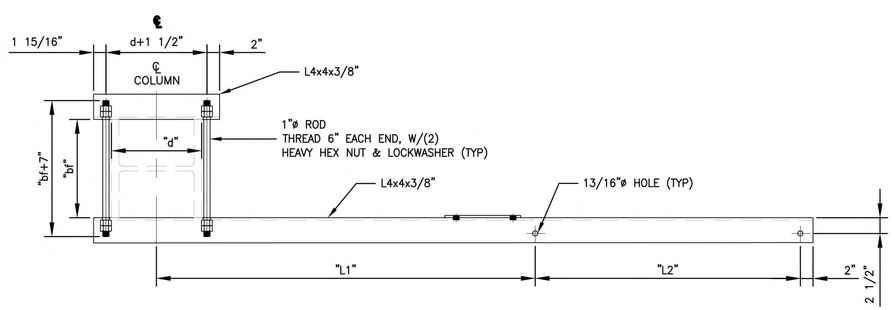

SECTION A
SCALE: 1"=1'-0"

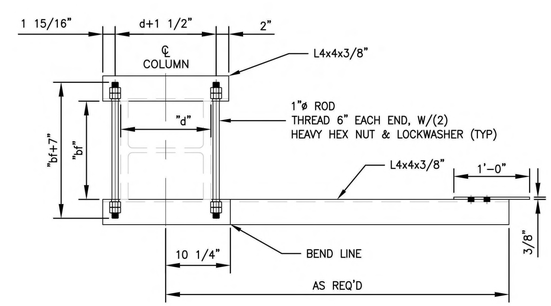

SECTION B
SCALE: 1"=1'-0"

PLOT SCALE: AS SHOWN
5/15/2025 3:57:43 PM 43377-s-et-dt610.dwg

No.	Revisions	Date	By

AMTRAK

Office of Engineering
Engineering Design
National Railroad Passenger Corporation
30th Street Station, Philadelphia, Pennsylvania 19104

Approved	Date

COMMONWEALTH OF PENNSYLVANIA REGISTERED PROFESSIONAL ENGINEER MATTHEW JOHN SCHREFFLER PE096326

HNTB
HNTB Corporation
1650 Arch Street, Suite 1700
Philadelphia, PA 19103
215-568-6500

KEYSTONE CORRIDOR
I-83 RECONSTRUCTION EARLY ACTION
ELECTRIC TRACTION
STEEL DETAILS (11 OF 16)

Designed PJC | Drawn PJC | Checked MJS | Date 06/13/2025

Job No.	43377
File Name	43377-s-et-dt610
Sheet No.	64 OF 77
Dwg. No.	ET-610

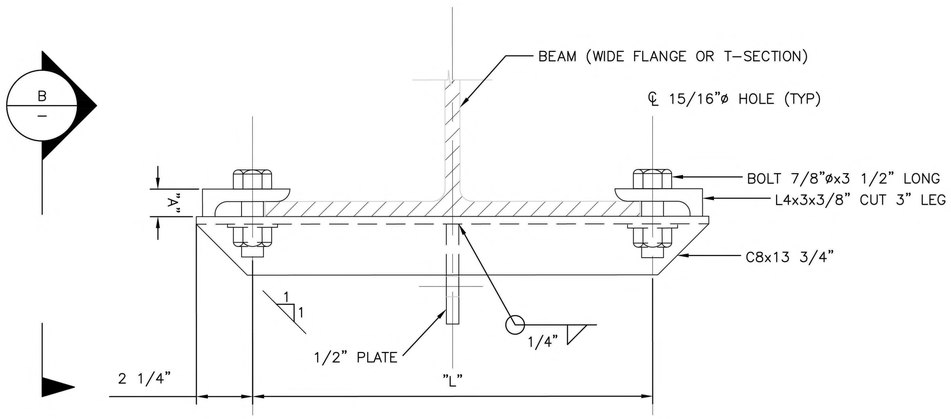

BEAM SLIDING CONNECTION BSC–1

SCALE: NTS

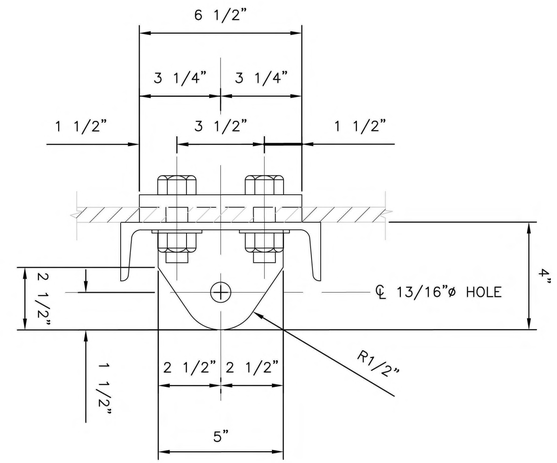

B – SECTION
SCALE: N.T.S.

BEAM SCHEDULE

STRUCTURE NUMBER	STATION	BEAM SIZE
P–1660	5395+95	14C36
P–1661	5398+05	14C36
P–1661 1/2	5399+69	W14X145
P–1662 1/2	5400+94	W14X90
P–1663 1/2	5403+39	W14X145

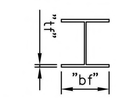

MARK	DIMENSIONS	
	A	L
BSC–1	tf+5/16"	bf+1 1/4"

SEE SED FOR BEAM OR CANTILEVER TYPE

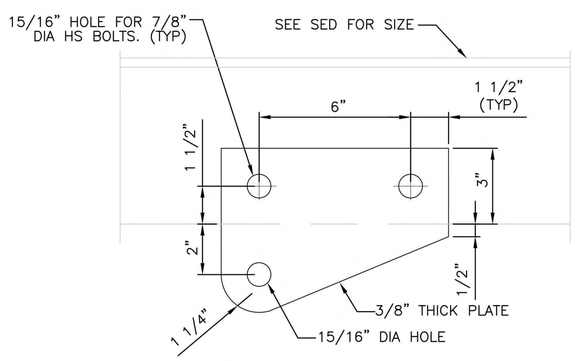

DETAIL BKPL–1

NOTE: FIELD VERIFY DIMENSIONS PRIOR TO FABRICATION.

NOTE:

1. ALL BOLTS SHALL BE 7/8" ø HIGH STRENGTH BOLTS IN 15/16" ø HOLES, UNLESS OTHERWISE NOTED. ALL BOLTS TO HAVE HEXAGONAL HEAD AND SUPPLIED WITH HEX NUT AND PLAIN WASHER, UNLESS OTHERWISE NOTED.

PLOT SCALE: AS SHOWN
8/30/2024 5:38:47 PM 43377–s–et–dt611.dwg

No.	Revisions	Date	By

AMTRAK

Office of Engineering
Engineering Design
National Railroad Passenger Corporation
30th Street Station, Philadelphia, Pennsylvania 19104

Approved	Date

COMMONWEALTH OF PENNSYLVANIA REGISTERED PROFESSIONAL ENGINEER MATTHEW JOHN SCHROEFFLER PE096326

HNTB
HNTB Corporation
1650 Arch Street, Suite 1700
Philadelphia, PA 19103
215–568–6500

KEYSTONE CORRIDOR
I–83 RECONSTRUCTION EARLY ACTION
ELECTRIC TRACTION
STEEL DETAILS (12 OF 16)

Designed	PJC	Drawn	JRT	Checked	MJS	Date	06/13/2025

Job No.	43377
File Name	43377–s–et–dt611
Sheet No.	65 OF 77
Dwg. No.	ET–611

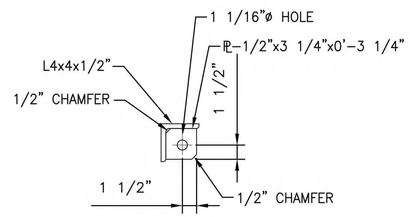

ITEM 1

SCALE 1 1/2"=1'-0"

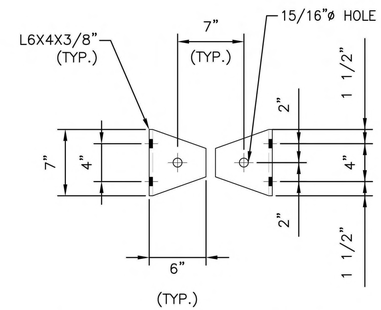

CONNECTION CLIP CC-1

SCALE 1 1/2"=1'-0"

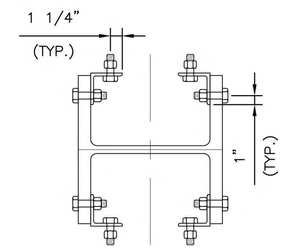

B / –

SECTION

SCALE: 1 1/2"=1'-0"

NOTES

1. ALL HOLES ARE 15/16" ø FOR 7/8" ø BOLTS U.N.O.
2. SEE ET-609 FOR SECTION VIEW OF CC-1.

PLOT SCALE: AS SHOWN
3/11/2025 10:31:27 AM 43377-s-et-dt612.dwg

No.	Revisions	Date	By

AMTRAK

Office of Engineering
Engineering Design
National Railroad Passenger Corporation
30th Street Station, Philadelphia, Pennsylvania 19104

Approved	Date

COMMONWEALTH OF PENNSYLVANIA REGISTERED PROFESSIONAL ENGINEER MATTHEW JOHN SCHROEFFLER PE096326

HNTB
HNTB Corporation
1650 Arch Street, Suite 1700
Philadelphia, PA 19103
215-568-6500

KEYSTONE CORRIDOR
I-83 RECONSTRUCTION EARLY ACTION
ELECTRIC TRACTION

STEEL DETAILS (13 OF 16)

Designed	PJC	Drawn	JRT	Checked	MJS	Date	06/13/2025

Job No.	43377
File Name	43377-s-et-dt612
Sheet No.	66 OF 77
Dwg. No.	ET-612

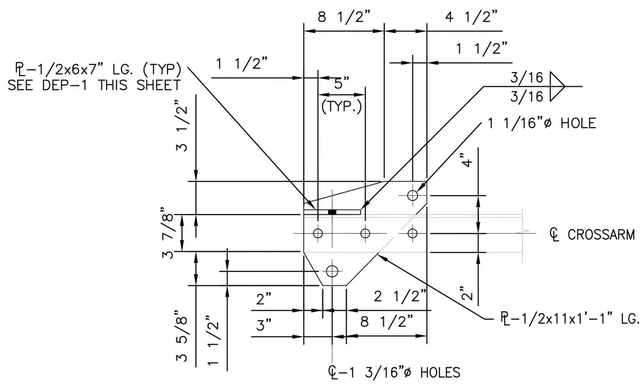

SUSPENSION PLATE SPL-1

SCALE 1 1/2"=1'-0"

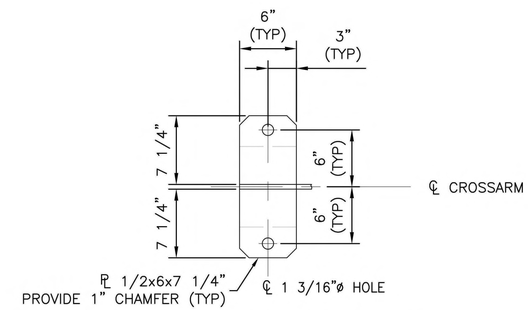

DEAD END PLATE DEP-1

SCALE 1 1/2"=1'-0"

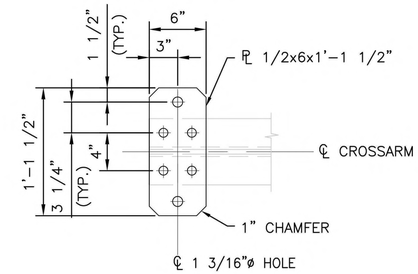

DEAD END PLATE DEP-2

SCALE 1 1/2"=1'-0"

NOTES

1. **ALL HOLES ARE 15/16" ø FOR 7/8" ø BOLTS U.N.O.**

No.	Revisions	Date	By

AMTRAK

Office of Engineering
Engineering Design
National Railroad Passenger Corporation
30th Street Station, Philadelphia, Pennsylvania 19104

Approved	Date

COMMONWEALTH OF PENNSYLVANIA REGISTERED PROFESSIONAL ENGINEER MATTHEW JOHN SCHREFFLER PE096326

HNTB
HNTB Corporation
1650 Arch Street, Suite 1700
Philadelphia, PA 19103
215-568-6500

KEYSTONE CORRIDOR
I-83 RECONSTRUCTION EARLY ACTION
ELECTRIC TRACTION
STEEL DETAILS (14 OF 16)

Designed	PJC	Drawn	JRT	Checked	MJS	Date	06/13/2025

Job No.	43377
File Name	43377-s-et-dt613
Sheet No.	67 OF 77
Dwg. No.	ET-613

PLOT SCALE: AS SHOWN
3/7/2025 2:07:43 PM
43377-s-et-dt613.dwg

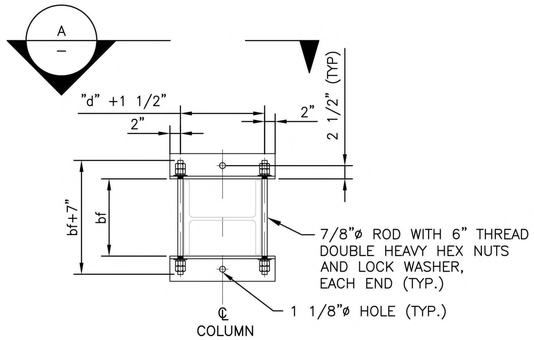

POLE CLAMP – PC–1A

SCALE: 1" = 1'–0"

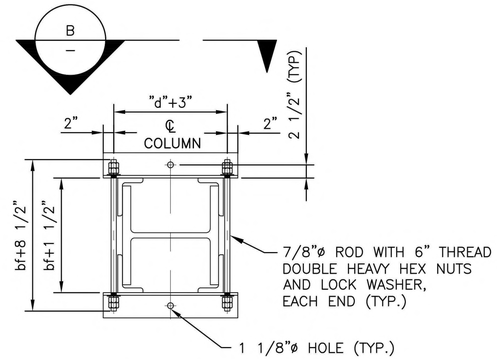

POLE CLAMP – PC–1B

SCALE: 1" = 1'–0"

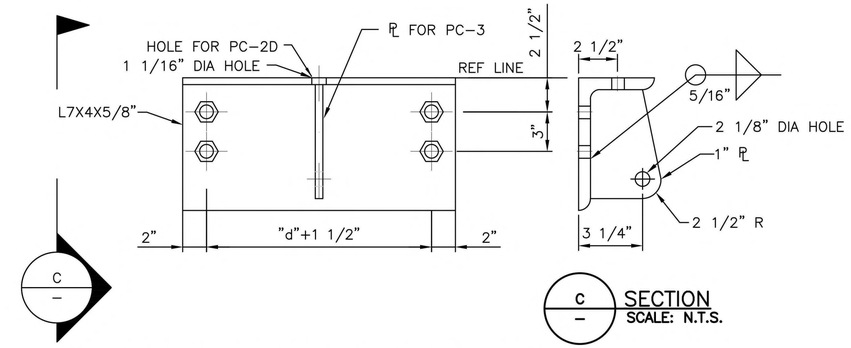

POLE CLAMP PC–2D & PC–3 FRONT VIEW

SCALE: N.T.S.
INVERT CONNECTION ANGLE(S) WHEN REQUIRED

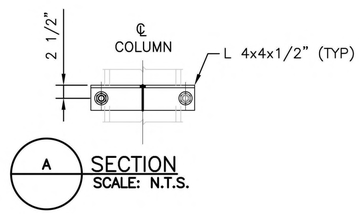

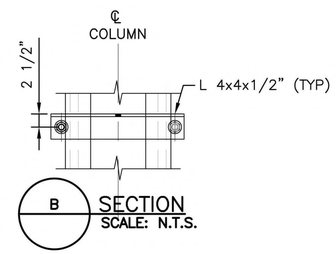

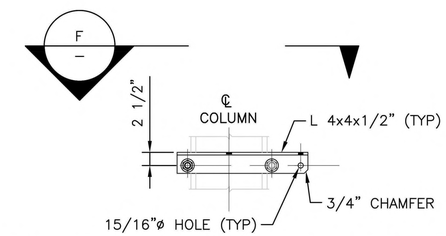

FIBER OPTIC CROSS ARM ASSEMBLY (FO)

SCALE: N.T.S.

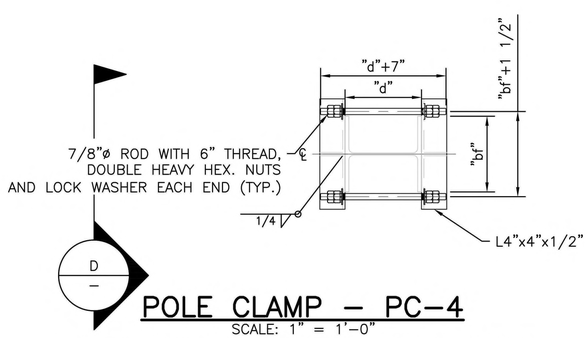

POLE CLAMP – PC–4

SCALE: 1" = 1'–0"

NOTE: FIELD VERIFY "bf" & "d" DIMENSION PRIOR TO FABRICATION.

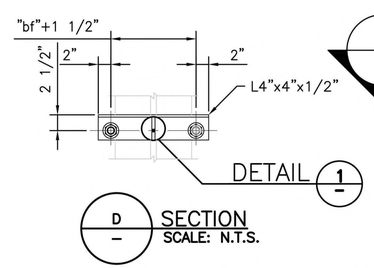

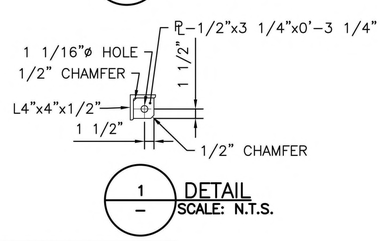

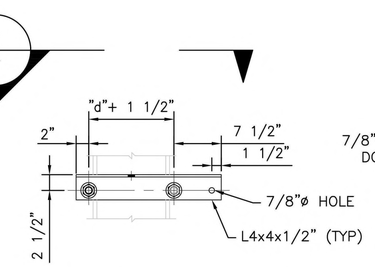

POLE CLAMP – PC–5

SCALE: 1" = 1'–0"

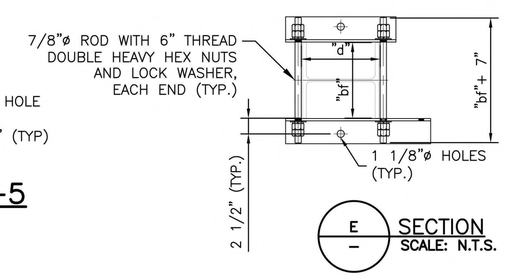

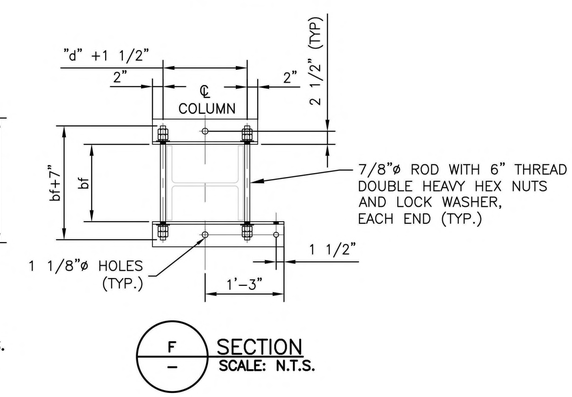

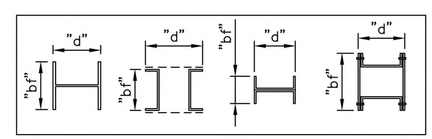

NOTES:

1. FIELD VERIFY "bf" & "d" DIMENSIONS PRIOR TO FABRICATION.
2. ALL HOLES ARE 15/16" ø FOR 7/8" ø BOLTS U.N.O.

COLUMN DIMENSION SCHEDULE

MARK	bf	d
W14X90	14 1/2"	14"
WF14X103	14 9/16"	14 7/16"
WF14X119	14 3/8"	14 1/2"
W14X145	15 1/2"	14 3/4"
W14X176	15 5/8"	15 1/4"

FIBER OPTIC ARM SCHEDULE

MARK	COLUMN SIZE
FO–145	W14X145
FO–176	W14X176

No.	Revisions	Date	By

AMTRAK

Office of Engineering
Engineering Design
National Railroad Passenger Corporation
30th Street Station, Philadelphia, Pennsylvania 19104

Approved	Date

COMMONWEALTH OF PENNSYLVANIA REGISTERED PROFESSIONAL ENGINEER MATTHEW JOHN SCHROEFFLER PE096326

HNTB

HNTB Corporation
1650 Arch Street, Suite 1700
Philadelphia, PA 19103
215–568–6500

KEYSTONE CORRIDOR
I–83 RECONSTRUCTION EARLY ACTION
ELECTRIC TRACTION

STEEL DETAILS (15 OF 16)

Designed PJC | Drawn PJC | Checked MJS | Date 06/13/2025

Job No. 43377
File Name 43377–s–et–dt614
Sheet No. 68 OF 77
Dwg. No. ET–614

43377–s–et–dt614.dwg
PLOT SCALE: AS SHOWN
6/5/2025 3:04:32 PM

NOTES:

1. SEE DRAWINGS ET–002 AND ET–003 FOR GENERAL NOTES AND ABBREVIATIONS.
2. STRUCTURAL STEEL ROLLED SECTION SHALL CONFORM TO ASTM A992.
3. WELDING SHALL CONFORM TO THE AWS D1.1, LATEST ISSUE.
4. ALL STRUCTURAL STEEL SHALL BE GALVANIZED, MAXIMUM COAT PER ASTM A123.
5. GALVANIZING SHALL CONFORM TO ASTM A123 AND ASTM A153, LATEST ISSUE.

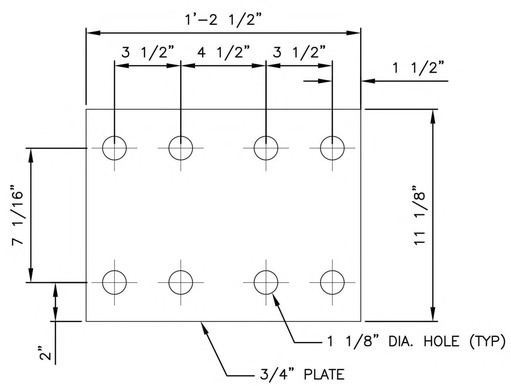

FPL–2
SCALE: 3" = 1'–0"

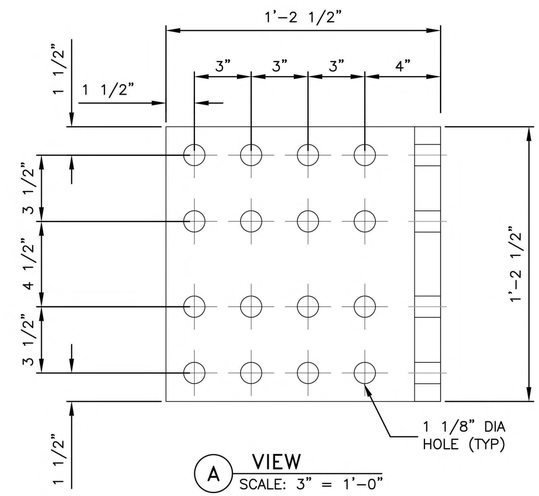

A VIEW
SCALE: 3" = 1'–0"

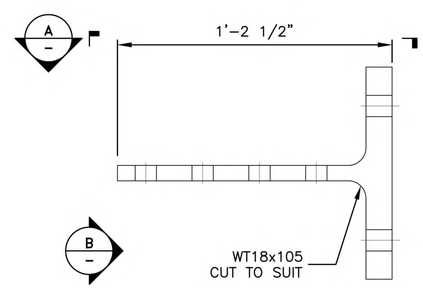

BR–3
SCALE: 3" = 1'–0"

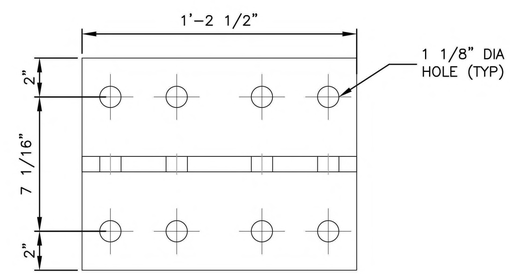

B VIEW
SCALE: 3" = 1'–0"

0'–0" 0'–4" 0'–8" 1'–0"
SCALE: 3" = 1'–0"

No.	Revisions	Date	By

AMTRAK

Office of Engineering
Engineering Design
National Railroad Passenger Corporation
30th Street Station, Philadelphia, Pennsylvania 19104

Approved	Date

COMMONWEALTH OF PENNSYLVANIA REGISTERED PROFESSIONAL ENGINEER MATTHEW JOHN SCHREFFLER PE096326

HNTB
HNTB Corporation
1650 Arch Street, Suite 1700
Philadelphia, PA 19103
215–568–6500

KEYSTONE CORRIDOR
I–83 RECONSTRUCTION EARLY ACTION
ELECTRIC TRACTION
STEEL DETAILS (16 OF 16)

Designed	PJC	Drawn	PJC	Checked	MJS	Date	06/13/2025

Job No.	43377
File Name	43377–s–et–dt616
Sheet No.	69 OF 77
Dwg. No.	ET–615

PLOT SCALE: AS SHOWN
5/15/2025 3:57:37 PM 43377–s–et–dt616.dwg

BILL OF MATERIAL

ITEM	MARK	DESCRIPTION	UNIT	QUANT.
–	–	4000 PSI CONCRETE	CY	A/R
–	–	DEFORMED STEEL BARS #4	EA	A/R
–	–	DEFORMED STEEL BARS #9	EA	14/12
–	–	CASING 3/8" THK. x 4'–0"ø	FT	A/R
–	–	ANCHOR BOLT D"ø x 8'–0" LONG, W/5 HEX NUTS, 2 PL WASHERS, & 2 SQ WASHERS	EA	8
–	EB–1	EMBEDMENT PLATE ASSEMBLY	EA	1
–	–	ANCHOR BOLT TEMPLATE	EA	1
351	–	SERVIT POST FOR 4/0 COPPER WITH POST 5/8–11UNC X 1 1/4, BURNDY #KC–28B1	EA	1
402	–	4/0, 1/C (37 STRAND) BARE COPPER CIRC 112–C	FT	10
429	–	GROUND CLAMP FOR 4/0 CU CABLE TO 2"–2 3/8" DIAM. PIPE, BURNDY #GAR1934	EA	3

TABLE 1

MARK	SIZE	"D"	"DH"	"TL"	ANOTHER SPEC.
F–1	48"ø	2"	2 1/4"	1'–0"	F1554 GR. 55

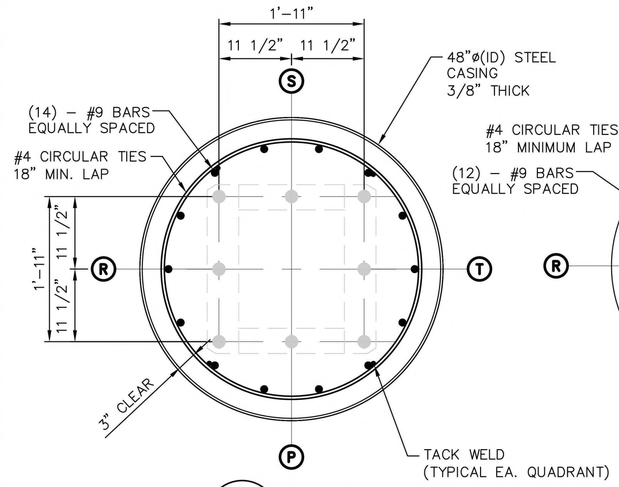

A — SECTION
SCALE: NTS

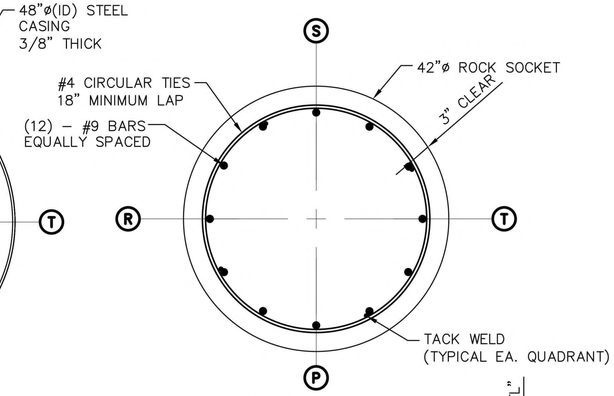

B — SECTION
SCALE: NTS

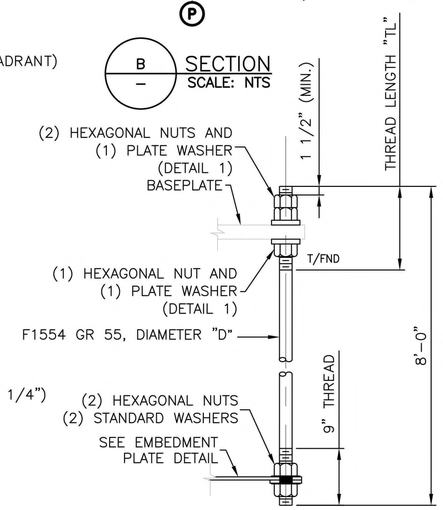

ANCHOR BOLT DETAIL
SCALE: NTS

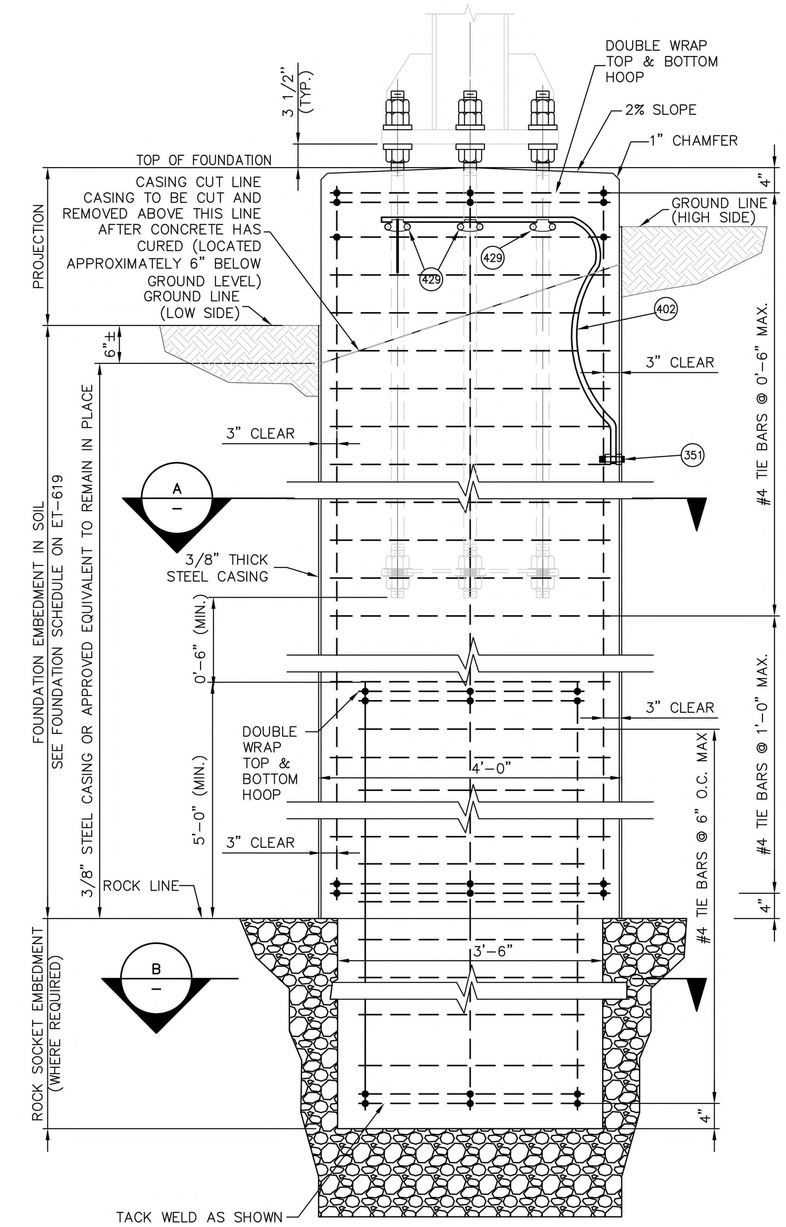

FOUNDATION F–1
SCALE: NTS

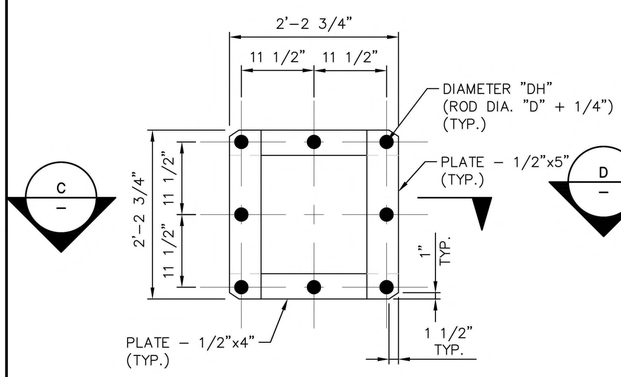

EMBEDMENT PLATE DETAIL – EB–1
SCALE: NTS

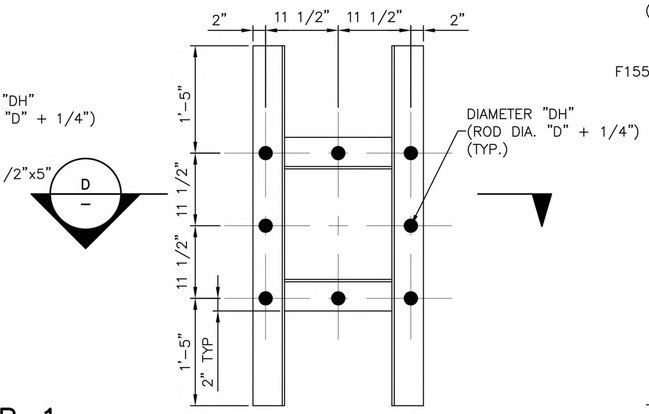

ANCHOR BOLT TEMPLATE
SCALE: NTS

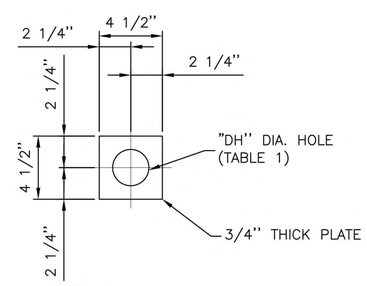

1 — DETAIL
SCALE: NTS

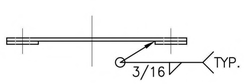

C — SECTION
SCALE: NTS

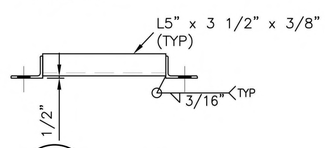

D — SECTION
SCALE: NTS

NOTES:
1. EMBEDMENT PLATE (EB–1) SHALL BE GALVANIZED.
2. ANCHOR BOLT TEMPLATE SHALL BE MADE WITH PLAIN FINISH.

No.	Revisions	Date	By

AMTRAK

Office of Engineering
Engineering Design
National Railroad Passenger Corporation
30th Street Station, Philadelphia, Pennsylvania 19104

Approved	Date

COMMONWEALTH OF PENNSYLVANIA — REGISTERED PROFESSIONAL ENGINEER — MATTHEW JOHN SCHREFFLER — PE096326

HNTB
HNTB Corporation
1650 Arch Street, Suite 1700
Philadelphia, PA 19103
215–568–6500

KEYSTONE CORRIDOR
I–83 RECONSTRUCTION EARLY ACTION
ELECTRIC TRACTION
FOUNDATION DETAILS (1 OF 3)

Designed PJC | Drawn PJC | Checked MJS | Date 06/13/2025

Job No. 43377
File Name 43377–s–et–dt617
Sheet No. 70 OF 77
Dwg. No. ET–616

PLOT SCALE: AS SHOWN
6/19/2025 9:35:17 AM
43377–s–et–dt617.dwg

BILL OF MATERIAL

ITEM	MARK	DESCRIPTION	UNIT	QUANT.
–	–	4000 psi CONCRETE	CY	AS REQ'D
–	–	DEFORMED STEEL BARS #4	EA	AS REQ'D
–	–	DEFORMED STEEL BARS #9	EA	21/12
–	–	CASING 3/8" THK. x 3'–6"ø	FT	AS REQ'D
–	–	ANCHOR BOLT D"ø x 8'–0" LONG,W/5 HEX NUTS, 2 PL WASHERS, & 2 STD WASHERS	EA	6
–	EB–1	EMBEDMENT PLATE ASSEMBLY	EA	1
–	–	ANCHOR BOLT TEMPLATE	EA	1
351	–	SERVIT POST FOR 4/0 COPPER WITH POST 1/2–13UNC X 1 1/16, BURNDY #KC–28B1	EA	1
402	–	4/0, 1/C (37 STRAND) BARE COPPER, CIRC 112–C	FT	10
429	–	GROUND CLAMP FOR 4/0 CU CABLE TO 2"–2 3/8" DIA. PIPE, BURNDY #GAR1934	EA	2

TABLE 1

MARK	SIZE	"D"	"DH"	"TL"	ANOTHER SPEC.
F–1A	42"ø	2"	2 1/4"	1'–0"	F1554 GR. 55

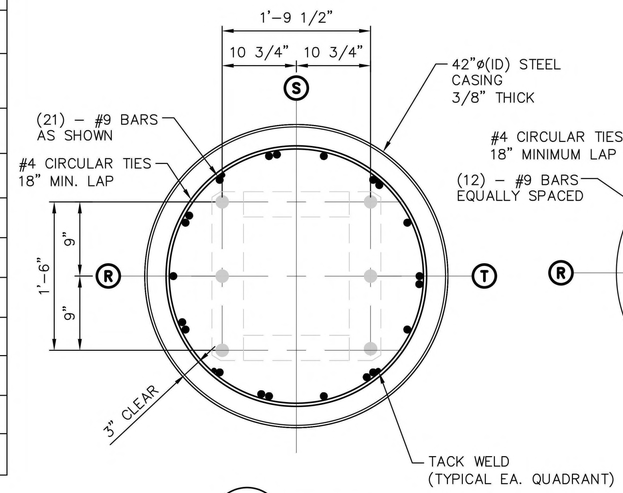

A – SECTION
SCALE: NTS

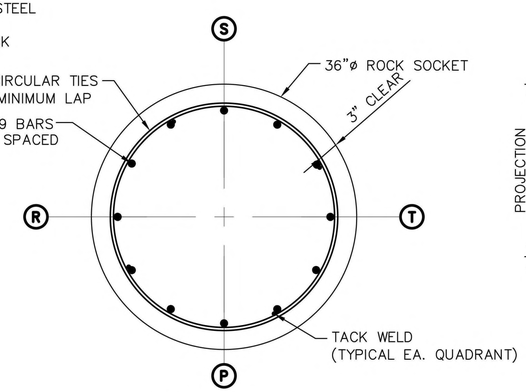

B – SECTION
SCALE: NTS

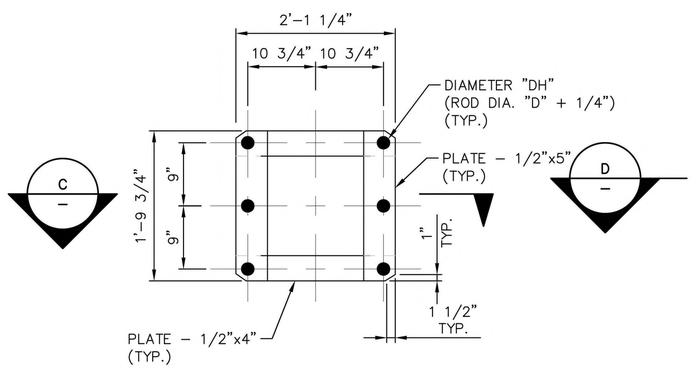

EMBEDMENT PLATE DETAIL – EB–1A
SCALE: NTS

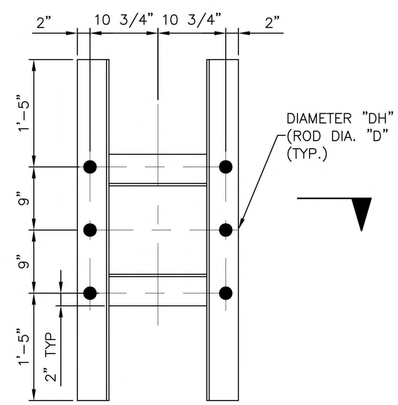

ANCHOR BOLT TEMPLATE
SCALE: NTS

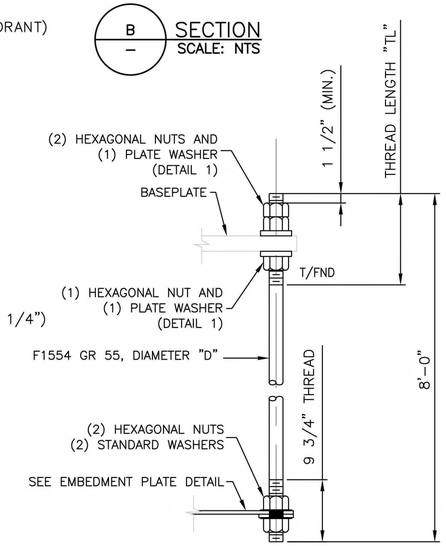

ANCHOR BOLT DETAIL
SCALE: NTS

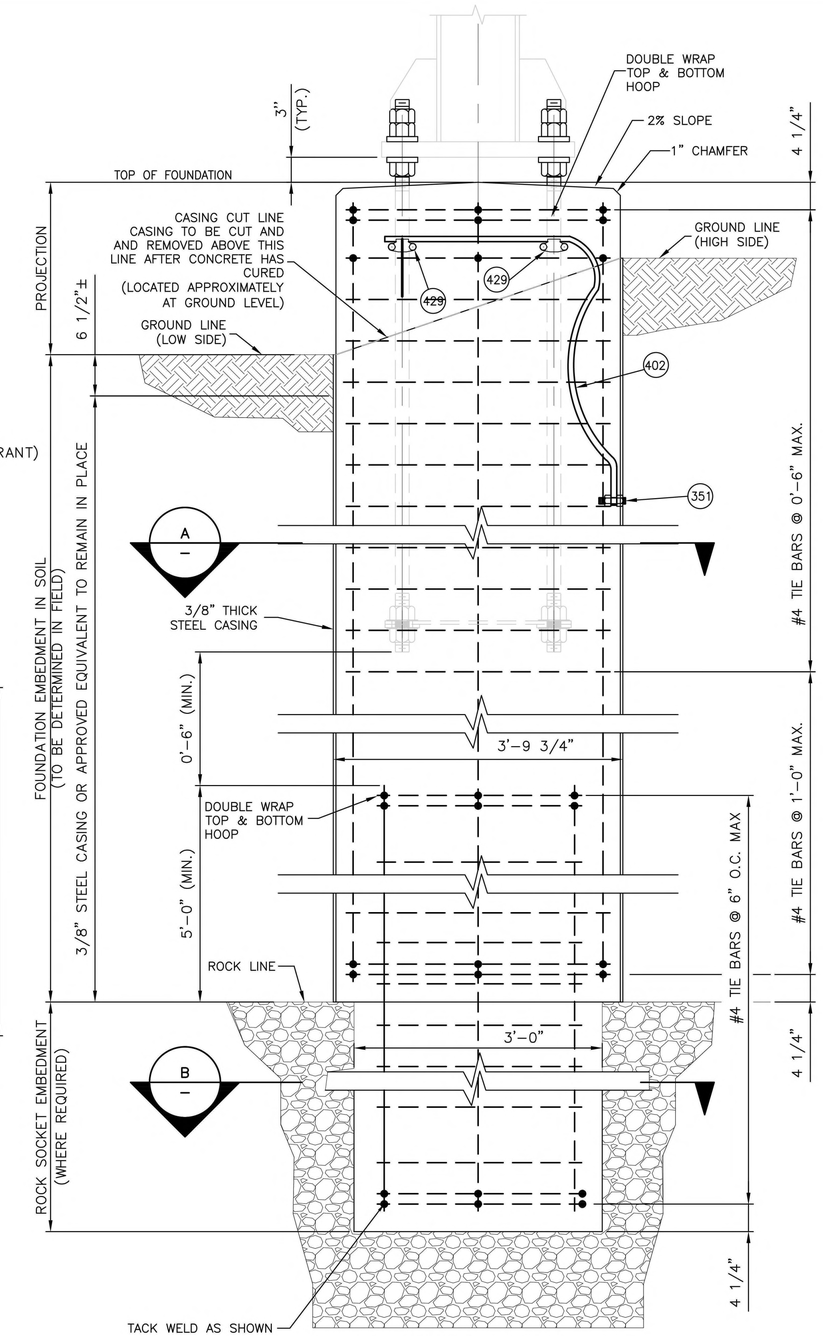

FOUNDATION F–1A
SCALE: NTS

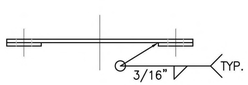

C – SECTION
SCALE: NTS

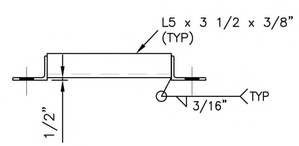

D – SECTION
SCALE: NTS

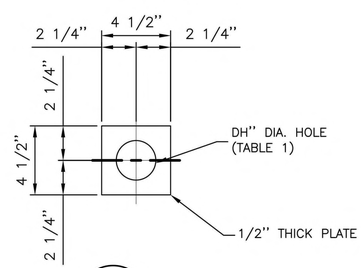

1 – DETAIL
SCALE: NTS

No.	Revisions	Date	By

AMTRAK

Office of Engineering
Engineering Design
National Railroad Passenger Corporation
30th Street Station, Philadelphia, Pennsylvania 19104

Approved	Date

COMMONWEALTH OF PENNSYLVANIA REGISTERED PROFESSIONAL ENGINEER MATTHEW JOHN SCHREFFLER PE096326

HNTB
HNTB Corporation
1650 Arch Street, Suite 1700
Philadelphia, PA 19103
215–568–6500

KEYSTONE CORRIDOR
I–83 RECONSTRUCTION EARLY ACTION
ELECTRIC TRACTION
FOUNDATION DETAILS (2 OF 3)

Designed ACP | Drawn ACP | Checked MJS | Date 06/13/2025

Job No.	43377
File Name	43377–s–et–dt617
Sheet No.	71 OF 77
Dwg. No.	ET–617

PLOT SCALE: AS SHOWN
6/19/2025 9:35:17 AM 43377–s–et–dt617.dwg

BILL OF MATERIAL				
ITEM	MARK	DESCRIPTION	UNIT	QUANT.
–	–	4000 psi CONCRETE	CY	AS REQ'D
–	–	DEFORMED STEEL BARS #4	EA	AS REQ'D
–	–	DEFORMED STEEL BARS #9	EA	14/12
–	–	CASING 3/8" THK. x 3'–6"ø	FT	AS REQ'D
–	–	W12X65 x LENGTH A/R w/ WELDMENTS	EA	1

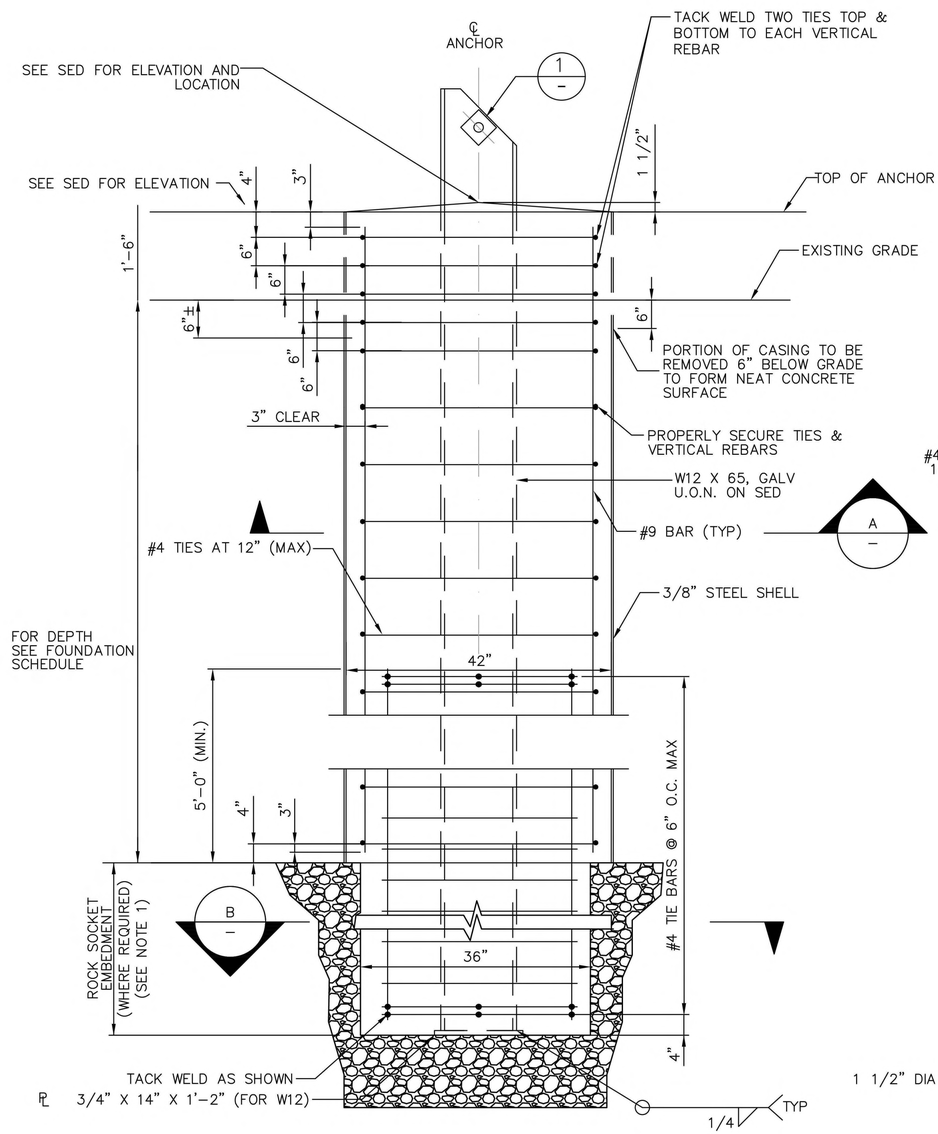

GUY ANCHOR GA–1
ELEVATION

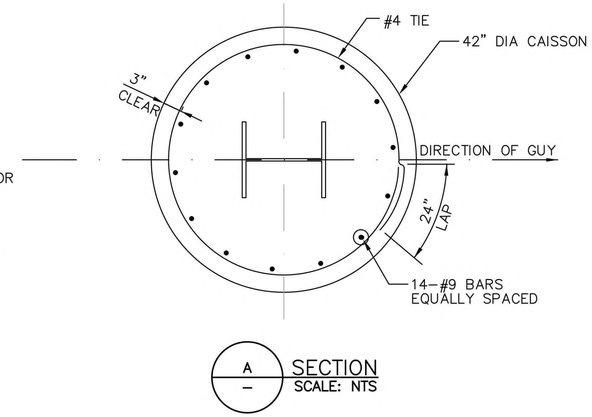

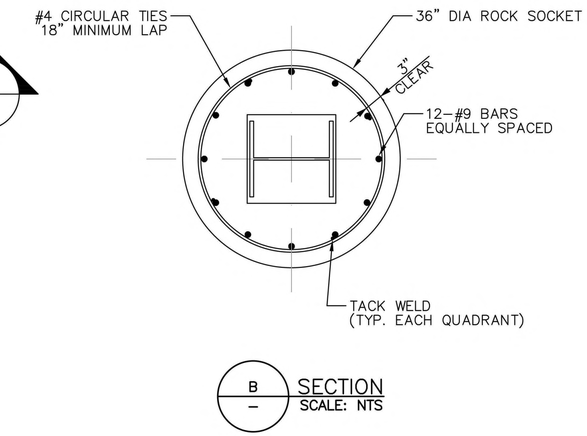

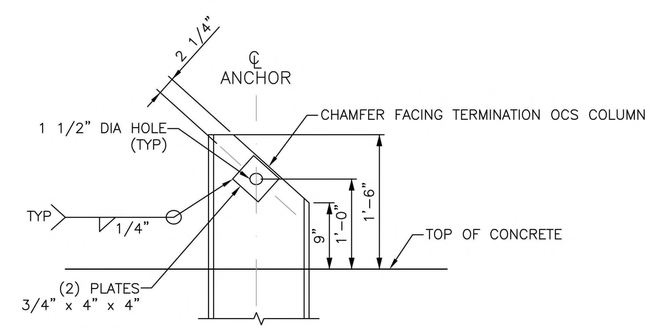

NOTE:

1. CAISSONS EMBEDDED IN BEDROCK MAY BE TERMINATED AT A MINIMUM OF 5 FEET INTO COMPETENT ROCK OR RECOMMENDED CAISSON LENGTH, WHICHEVER IS LESS.

No.	Revisions	Date	By

AMTRAK

Office of Engineering
Engineering Design
National Railroad Passenger Corporation
30th Street Station, Philadelphia, Pennsylvania 19104

Approved	Date

COMMONWEALTH OF PENNSYLVANIA REGISTERED PROFESSIONAL ENGINEER MATTHEW JOHN SCHREFFLER PE096326

HNTB
HNTB Corporation
1650 Arch Street, Suite 1700
Philadelphia, PA 19103
215-568-6500

KEYSTONE CORRIDOR
I-83 RECONSTRUCTION EARLY ACTION
ELECTRIC TRACTION
FOUNDATION DETAILS (3 OF 3)

Designed PJC | Drawn PJC | Checked MJS | Date 06/13/2025

Job No.	43377
File Name	43377-s-et-dt618
Sheet No.	72 OF 77
Dwg. No.	ET–618

PLOT SCALE: AS SHOWN
6/19/2025 9:31:37 AM
43377-s-et-dt618.dwg

COLUMN FOUNDATION SCHEDULE

STRUCTURE NUMBER	STATION	NORTH COLUMN								
		NORTHING	EASTING	FOUNDATION TYPE	PROPOSED GROUND SURFACE ELEVATION	TOP OF DRILLED CAISSON ELEVATION	EXPOSED DRILLED CAISSON LENGTH*	ESTIMATED LENGTH OF DRILLED CAISSON IN SOIL** (FT)	ESTIMATED LENGTH OF DRILLED CAISSON IN ROCK (FT)	REMARK
P–1661 1/2	5399+69	335690.8115	2213944.4635	F–1	309.0	311.0	2.0	24.0	–	–
P–1662 1/2	5400+94	335796.1499	2213883.4516	F–1A	309.0	311.0	2.0	16.0	–	–
P–1663 1/2	5403+39	335996.8791	2213744.1072	F–1	309.4	310.9	1.5	24.0	5.0	–

COLUMN FOUNDATION SCHEDULE

STRUCTURE NUMBER	STATION	SOUTH COLUMN								
		NORTHING	EASTING	FOUNDATION TYPE	PROPOSED GROUND SURFACE ELEVATION	TOP OF DRILLED CAISSON ELEVATION	EXPOSED DRILLED CAISSON LENGTH*	ESTIMATED LENGTH OF DRILLED CAISSON IN SOIL** (FT)	ESTIMATED LENGTH OF DRILLED CAISSON IN ROCK (FT)	REMARK
P–1661 1/2	5399+69	335639.8379	2213866.8452	F–1	309.5	311.0	1.5	24.0	–	–
P–1662 1/2	5400+94	335749.5815	2213804.8863	F–1A	309.5	311.0	1.5	16.0	–	–
P–1663 1/2	5403+39	335969.2782	2213690.3642	F–1	309.9	310.9	1.0	24.0	–	–

DOWN GUY FOUNDATION SCHEDULE

STRUCTURE NUMBER	STATION	NORTH COLUMN								
		NORTHING	EASTING	FOUNDATION TYPE	PROPOSED GROUND SURFACE ELEVATION	TOP OF DRILLED CAISSON ELEVATION	EXPOSED DRILLED CAISSON LENGTH*	ESTIMATED LENGTH OF DRILLED CAISSON IN SOIL** (FT)	ESTIMATED LENGTH OF DRILLED CAISSON IN ROCK (FT)	REMARK
P–1661 1/2	5399+69	335655.2115	2213968.2964	GA–1	309.5	311.0	1.5	16.0	–	–
P–1663 1/2	5403+39	336023.5635	2213730.4029	GA–1	309.4	310.9	1.5	16.0	–	–

DOWN GUY FOUNDATION SCHEDULE

STRUCTURE NUMBER	STATION	SOUTH COLUMN								
		NORTHING	EASTING	FOUNDATION TYPE	PROPOSED GROUND SURFACE ELEVATION	TOP OF DRILLED CAISSON ELEVATION	EXPOSED DRILLED CAISSON LENGTH*	ESTIMATED LENGTH OF DRILLED CAISSON IN SOIL** (FT)	ESTIMATED LENGTH OF DRILLED CAISSON IN ROCK (FT)	REMARK
P–1661 1/2	5399+69	335601.3073	2213892.6389	GA–1	309.5	311.0	1.5	16.0	–	–
P–1663 1/2	5403+39	335994.3010	2213673.8150	GA–1	309.4	310.9	1.5	16.0	–	–

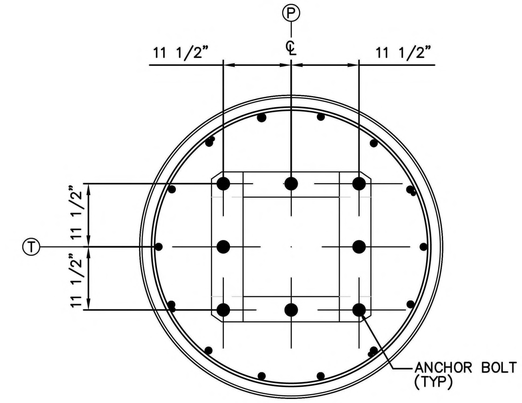

FOUNDATION F–1
ANCHOR BOLT ORIENTATION–1

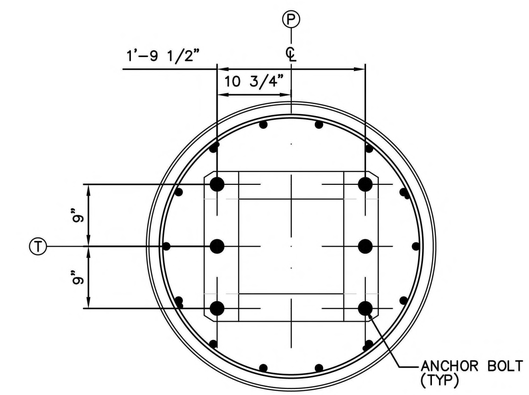

FOUNDATION F–1A
ANCHOR BOLT ORIENTATION–1

NOTE:

1. CAISSONS EMBEDDED IN BEDROCK MAY BE TERMINATED AT A MINIMUM OF 5 FEET INTO COMPETENT ROCK OR RECOMMENDED CAISSON LENGTH, WHICHEVER IS LESS.
2. THE VERTICAL DATUM IS BASED ON NAVD88 BASED ON SURVEY COLLECTED BY DAWOOD UNDER CONTRACT WITH HNTB, IN MAY 2012. HORIZONTAL DATUM IS PA STATE PLANE – NAD83 ZONE (CORS96) BASED ON CONTROL PROVIDED BY HNTB.

* EXPOSED LENGTH OF DRILLED CAISSON IS LENGTH FROM TOP OF DRILLED CAISSON TO PROPOSED GROUND SURFACE.
** ESTIMATED LENGTH OF DRILLED CAISSON IN SOIL IS LENGTH FROM PROPOSED GROUND SURFACE TO TIP OF DRILLED CAISSON WHERE NO ROCK SOCKET IS REQUIRED AND FROM PROPOSED GROUND SURFACE TO ESTIMATED TOP OF BEDROCK, WHERE ROCK SOCKET IS REQUIRED.

OCS ASSEMBLY MASTER BILL OF MATERIAL

AMTRAK MARK NUMBER	REFERENCE DRAWING	DESCRIPTION	UNIT	QUANTITY
1/0 SIGNAL	ET-004	1/0 AWG, H.D. COPPER, SIGNAL POWER CABLE	FT	2074
9/16 GW	ET-004	9/16" DIA COPPERWELD	FT	1847
9403 FET	ET-004	138KV TRANSMISSION WIRE	FT	3694
FOA-2	ET-506	ADSS SUSPENSION ASSEMBLY	EA	1
FOA-3	ET-506	ADSS DOUBLE DEAD-END ASSEMBLY	EA	2
G-1	ET-503	GUY STRAND ASSEMBLY	EA	4
GWD-2A	ET-507	STATIC WIRE SINGLE DEAD-END ASSEMBLY	EA	2
GWD-4	ET-507	STATIC WIRE DOUBLE DEAD-END ASSEMBLY	EA	4
GWS-2	ET-507	GROUND WIRE ASSEMBLY	EA	3
H	ET-500	HANGER ASSEMBLY	EA	184
J	ET-500	HANGER ASSEMBLY	EA	68
ME	ET-500	HANGER ASSEMBLY	EA	24
NA11	ET-505	SIGNAL POWER INSULATOR ASSEMBLY	EA	2
NA12	ET-505	SIGNAL POWER DOUBLE DEAD END ASSEMBLY	EA	4
NA27A(MOD)	ET-501	MESSENGER SUSPENSION TO BODY STRAND - HIGH CURVE	EA	8
NA35	ET-501	INSULATOR ASSEMBLY	EA	10
NA61A	ET-505	SIGNAL POWER SUSPENSION ASSEMBLY	EA	2
NA83	ET-501	MESSENGER SUSPENSION TO BEAM	EA	2
OPGW	ET-004	0.580" ACS/FIBER, FIBER OPTIC CABLE	FT	200
POA70	ET-502	PULL OFF ASSEMBLY	EA	10
SWA-1	ET-507	STATIC WIRE ASSEMBLY	EA	2
TDA-477A	ET-504	TRANSMISSION DOUBLE DEAD-END ASSEMBLY	EA	10
TSA-477	ET-504	TRANSMISSION SUSPENSION ASSEMBLY	EA	6

PLOT SCALE: AS SHOWN
3/7/2025 11:44:08 AM 43377-s-et-dt700.dwg

No.	Revisions	Date	By

AMTRAK

Office of Engineering
Engineering Design
National Railroad Passenger Corporation
30th Street Station, Philadelphia, Pennsylvania 19104

Approved	Date

COMMONWEALTH OF PENNSYLVANIA
REGISTERED PROFESSIONAL ENGINEER
MATTHEW JOHN SCHROEFFLER
PE096326

HNTB
HNTB Corporation
1650 Arch Street, Suite 1700
Philadelphia, PA 19103
215-568-6500

KEYSTONE CORRIDOR
I-83 RECONSTRUCTION EARLY ACTION
ELECTRIC TRACTION

OCS ASSY BOM

Designed PJC | Drawn PJC | Checked MJS | Date 06/13/2025

Job No. 43377
File Name 43377-s-et-dt700
Sheet No. 74 OF 77
Dwg. No. ET-700

MASTER BILL OF MATERIAL

ITEM NUMBER	AMTRAK MARK NUMBER	AMTRAK AMMS NUMBER	RR STOCK NUMBER	REFERENCE DRAWING	DESCRIPTION	UNIT	QUANTITY
1	B1	ET1–003	44 770 04402	ET1–003	INSULATOR, SUSPENSION, RR TYPE B1 CLEVIS, 10" BELL, LAPP 8100 (GRAY OR SPEC COLOR)	EA	116
2	MK1	ET–1146–D–2	44 562 21504	ET–1146–D–2	HOOK, MESSENGER, M.I., GALV.	EA	12
3	NS	11B–1226		11B–1226	SLEEVE, 4" X 2 1/4", #20 AWG. SHEET COPPER.	EA	8
4	JB	ET–148–E19	44 562 0160X	ET–148–E19	BOLT, HOOK 0.500X02.375, 1/2 X 2–3/8 13 UNC–2A, BRONZE, CLASS B	EA	24
6	NP1	11B–1206–8	44 562 23809	11B–1206–8	PIN, INSULATOR, STEEL, GALV., ASTM–123–37, 5/8" X 1 7/8"	EA	12
7	NR2	14E–433	21 030 02855X	14E–433	ROD, 0.72" DIA., BRONZE., THREADED (UNIT IN FT). TO ORDER BY LBS (1.62LB /FT) (MINIMUM PURCHASE 1000LBS)	FT	26
8	EE1	11B–1227	44 075 04508	11B–1227	EYE END, BRONZE, FOR HANGER ROD	EA	10
12	S4	ET–305E	44 562 27009	ET–305E	CHAIN SHACKLE, FORGED STEEL, GALV. WITH BOLT, NUT AND COTTER PIN	EA	46
14	CE1	11B–1227	44 045 08001	11B–1227	CLEVIS END, BRONZE, FOR HANGER ROD	EA	26
18	HC29A	ET–1029–E–10	44 562 15702	ET–1029–E–10	CLIP, INTERMEDIATE, GROOVED WIRE TO GROOVED WIRE, ALUMINUM–BRONZE CASTING, ASTM B–148–52	EA	388
19	BC20	ET–1094–E–2	44 562 17804	ET–1094–E–2	CLIP, TROLLEY WIRE, PULLOFF, BOLTED TYPE, BZ, G&H SPEC P117–6	EA	20
20	SSB34	ET1–100	44 210 00659	ET1–100	BOLT, CARRIAGE, SQUARE NECK, ROUND HEAD 1/2" X 1 5/8" 13 UNC–2A, 316 STAINLESS STEEL	EA	204
46	BC24B	ET–1087–E–1	44 562 17708	ET–1087–E–1	CLIP, 5/8" MESSENGER TO .34 DIA. ROD, BRONZE, BOLTED TYPE, SPEC. P117–6	EA	136
47	SSB22	ET1–100	44 210 00658	ET1–100	BOLT, CARRIAGE, SQUARE NECK, ROUND HEAD 1/2" X 2" 13 UNC–2A, 316 STAINLESS STEEL	EA	160
48	0.34 ROD	ET–1096	21 030 02550	–	0.34" DIA. HANGER ROD, BRONZE, 0.344LBS/FT, ORDERED BY LBS	FT	460
70	–	–	–	–	SUSPENSION SADDLE, ALUMINUM, FOR 477 ACSR, MACLEAN PWR. SYS., CAT. LS–6–N ANDERSON MS–46–C	EA	6
73	BC26B	ET–1078E–6	44 562 17900	ET–1078E–6	CLIP, GROOVED WIRE TO 0.34" DIA. ROD, BRONZE, ASTM B–48	EA	184
74	FHS	ET–652–E–10	44 562 25708	ET–652–E–10	SADDLE, FLEXIBLE HANGER, BRONZE CASTING	EA	24
78	–	ET1–100	44 210 00657	–	NUT, W/ (2) LOCKING SLOTS & CL WASHER, 1/2 –13 UNC–2B, WASHER: 1.063" DIA., 316 STAINLESS STEEL	EA	364
086A	–	–	–	–	TAP, CABLE WEDGE, 4/0 TO 4/0, CPI P/N 264115C	EA	7
87	–	–	44 423 00607	–	CARTRIDGE, WHITE FOR INSTALLATION OF COPPER TAPS, AMP#69338–5 (AUTOGEN 40–0100–01)	EA	18
88	–	ET1–002	–	ET1–002	4/0 AWG COPPER 7 STRAND JUMPER, FT	FT	42
088B	CS4/0S	AET.10402	44 015 00416	AET.10402	FORKED COLLAR SOCKET, FOR 4/0 7 STRAND COPPER WIRE, BODY: 316 STAINLESS STEEL, FLANGE: AL BRONZE ARTHUR FLURY AG, PART # 610.017.105	EA	5
101	–	AET–2002–3	44 744 00901	AET–2002–3	COMPRESSION EYE END, 9/16" COPPERWELD, NICOPRESS: 2957–M12	EA	5
112	–	–	44 045 07252	–	CLAMP TRUNNION BASE, LAPP CO.CAT.#57111	EA	3
120	S	ET–288E–4	44 770 0500X	ET–288E–4	INSULATOR, RR TYPE S,SPEC 560B 1–3/8"PINHOLE, PORCELAIN PRODS # 1027 ST 56–1 ANSI STANDARD, AMTRAK DWG ET 288E4,ET 1300E11 & 1302D8 (PKG QTY. OF 8)	EA	2
121	–	ET–288–E–4	44 240 0111X	ET–288–E–4	PIN FOR TYPE "S" INSULATOR, FORGED STEEL PIN WITH SOLID STEEL THREADS, TAPERED STYLE, GALV SPEC P–119	EA	2
143	–	–	44 045 03251	–	WIRE, ELE 9 AWG, 1 COND, 19 STRAND, 9/16" BARE COPPERWELD, 40% CONDUCTIVITY, 23,390 LB BREAKING LOAD	FT	1922
144	–	–	44 045 07359	–	TRUNION CLAMP, LAPP CO. CAT.#47102	EA	3
147	–	–	44 423 02401	–	TAP, COPPER ALLOY, 9/16" DIA TO 9/16" DIA COMPOSITE (0.561" DIA TO 0.625" DIA) , AMP# 2–275187–8	EA	14
162	S2	ET–305–E–5	44 562 27105	ET–305–E–5	CHAIN SHACKLE WITH BOLT, NUT AND COTTER PIN, STEEL, GALV.	EA	8
166	–	–	44 454 07303	–	SPLICE, BURNDY HY–SPLICE CAT.#YCS25 (SPLICER, CABLE, COMPRESSION TYPE FOR 1/0 – 7 STRAND BARE COPPER, FOR MEDIUM TENSION APPLICATIONS)	EA	4
171	–	–	–	–	DEAD END STRAIN CLAMP FOR 1/0–350MCM WIRE, BRONZE, ANDERSON, CAT. #BSD–68–N	EA	8
172	A2	–	–	ET–1302	PORCELAIN SUSPENSION, BELL, INSULATOR, 38KV LAPP, CAT. #97503–70	EA	20
203	C	ET–1302D	44 568 01402	ET–1302D	INSULATOR, RIGID, TYPE C	EA	30
204	XT17	ET–907E–1	44 562 31702	ET–907E–1	STRAP, RIGID INSULATOR, 10 –9/32" LG, W/PIN & COTTER, M.I., GALV., SPEC P116–5 & P119–11	EA	10
205	AP2	ET–200–E	44 562 24203	–	ANGLE PLATE, GALV. STEEL	EA	16
206	BG1	ET–145–E–24	44 562 04501	ET–145–E–24	BOLT, 3/4"X2 3/4", WITH NUT AND COTTER, STEEL, GALV.	EA	18
207	BG29	ET–145–E–24	44 562 03103	ET–145–E–24	BOLT, MACHINE 1/2" X 2–1/4", W/ 1 1/4" THD., 13 UNC–2A, STEEL, GALV., W/NUT & LOCK WASHER	EA	10
208	BB55	ET–146E–16	44 562 02303	ET–146–E–16	BOLT, MACHINE HEX HEAD 1/2 X 2–1/4 13 UNC–2A BRONZE SPECIAL W/NUT CLASS B, SPEC C.E.565	EA	20
209	XC5	11B–1231–5	44 562 11103	11B–1231–5	CLAMP, PIPE, M.I., GALV. (ADAPTER– CLAMP CONNECTS A PIPE 1 1/4"DIA. W/ 1 5/8"DIA.)	EA	10
211	XC12	ET–912E–4	44 562 21205	ET–912E–4	FULCRUM, CATENARY, STEADY, XC–12 MI GALV, BRIDESBURG FOUNDRY XC–12	EA	10
212	BB8	ET–146–E	44 562 03605	ET–146–E	BOLT, BRONZE (3/4" DIA X 2 3/4") W NUT & LOCKWASHER BOLT, MACHINE 3/4" – 10 X 2–3/4" UNC–2A CLASS B, SPEC C.E.565	EA	10
235	TUBE"S"	ET–1097–E–2	21 300 14004	ET–1097–E–2	TUBING, BRONZE 1.625"OD X 0.165" WALL ALLOY 651 HARD TEMPER ASTMB–315 F/E.T. DEPT. CATENARY ASSYS. (COORDINATE ORDER WITH ITEM 210)	FT	150
236	–	–	–	–	ARMOR ROD, FOR 477 ACSR PREFORMED LINE PRODUCT, CAT. #AR–0134	EA	6
237	–	–	–	–	BOLT, 1/2"–13UNC X 1 3/4", W/NUT, WASHER STEEL, GALV., TYPE A–325	EA	6
238	CC55A	–	–	AET–2002	ADAPTER CLEVIS, 3 1/2" X 9/16" X 13/16" WITH 5/8" HOLE, ULT. STR. 30,000#	EA	20
239	–	–	–	–	TURNBUCKLE, 1" X 18", JAW–EYE TYPE, ANDERSON, CAT. TB–1–JE–18	EA	20
407	KC28	–	44 454 05201	–	SERVIT POST GROUND CONNECTOR, BURNDY KC–28	EA	3
407A	KC28B1	–	44 454 05201	–	SERVIT POST GROUND CONNECTOR, BURNDY KC–28B1	EA	11
418	1/0 SIGNAL	–	44 045 00202	–	1/0 AWG BARE COPPER CONDUCTOR, 7 STRAND, CIRC 112C, SIGNAL TRANSMISSION (1000FT/RL)	FT	2074
419	–	–	–	–	TRANSMISSION WIRE: 477 MCM ACSR 26/7 HAWK	FT	4044
420	–	–	–	–	0.580" ACS AL TUBE, AC–86/580 24 FIBER	FT	810
500	–	–	44 045 00448	–	CABLE, GUY WIRE, 1 IN. DIA., 37 STRAND, EXTRA HI STRENGTH STEEL STRAND MIN. BREAKING LOAD 102,700 LBS. GALV. PER ASTM A–475, 1000 LF/REEL	FT	800
502	–	–	–	–	TURNBUCKLE, FORGED STEEL, GALV. W/EYE & CLEVIS ,2"X24" CROSBY HG–227	EA	16
506	–	–	–	–	VARI–GRIP DEAD END CAT.NO. VG–18–2105, PREFORMED LINE PRODUCTS	EA	32
507	–	–	–	–	ANCHOR SHACKLE, S.S. WITH BOLT, NUT AND COTTER, MCLEAN PWR SYS, # ASH–66–BC	EA	20
508	–	–	–	–	DEAD END, COMPRESSION, VERT. EYE TYPE SINGLE TONGUE, 477 ACSR 26/7, #VES105	EA	20
509	–	–	–	–	Y–CLEVIS EYE, 30K LBS. STRENGTH, MACLEAN POWER SYSTEM, CAT. RYCE–65–6254A	EA	20

No.	Revisions	Date	By

AMTRAK

Office of Engineering
Engineering Design
National Railroad Passenger Corporation
30th Street Station, Philadelphia, Pennsylvania 19104

Approved	Date

COMMONWEALTH OF PENNSYLVANIA
REGISTERED PROFESSIONAL ENGINEER
MATTHEW JOHN SCHREFFLER
PE096326

HNTB
HNTB Corporation
1650 Arch Street, Suite 1700
Philadelphia, PA 19103
215–568–6500

KEYSTONE CORRIDOR
I–83 RECONSTRUCTION EARLY ACTION
ELECTRIC TRACTION

OCS MASTER ASSEMBLY BOM (1 OF 2)

Designed PJC | Drawn PJC | Checked MJS | Date 06/13/2025

Job No.	43377
File Name	43377–s–et–dtl700
Sheet No.	75 OF 77
Dwg. No.	ET–701

PLOT SCALE: AS SHOWN
3/7/2025 11:44:06 AM
43377–s–et–dtl700.dwg

MASTER BILL OF MATERIAL

ITEM NUMBER	AMTRAK MARK NUMBER	AMTRAK AMMS NUMBER	RR STOCK NUMBER	REFERENCE DRAWING	DESCRIPTION	UNIT	QUANTITY
607	POL4	14B –63–6	44 562 25003	14B –63–6	PULL OFF CATENARY TROLLEY BRONZE (L) UNITED KNITTING # 180–05831–L INCLUDING FACE CLIP BC–20	EA	10
608	POR4	14B –63–6	44 562 25206	14B –63–6	PULL OFF CATENARY TROLLEY BRONZE (R) UNITED KNITTING # 180–05831–R INCLUDING FACE CLIP BC–20	EA	10
611	BB6	ET–146–E16	44 030 03415	ET–146–E16	BOLT, HEX HEAD 5/8 X 3", 11 UNC–2A BZ., W/NUT & 3/16 X 1 1/2 COTTER PIN BRONZE, SPECIAL, CLASS B, SPEC C.E.565	EA	10
870	–	–	–	–	SADDLE, BRONZE SUSPENSION CLAMP ANDERSON BRS–60–N	EA	2
2040	–	–	–	–	BOLT, 1 1/4" X 8 1/2"	EA	40
2041	–	–	–	–	BOLT, 1 1/4" X 6 1/2"	EA	32
2042	–	–	–	–	NUT, 1 1/4"	EA	144
2043	–	–	–	–	WASHER, 1 1/4"	EA	144
2044	–	–	–	–	BOLT, 1" X 4 1/2"	EA	128
2045	–	–	–	–	BOLT, 1" X 6"	EA	64
2046	–	–	–	–	NUT, 1"	EA	396
2047	–	–	–	–	WASHER, 1"	EA	396
2048	–	–	–	–	STEEL PLATE, 1'–2 1/2" X 11 1/8" X 3/4"	EA	4
2049	–	–	–	–	BOLT, 7/8" X 6 1/2"	EA	480
2050	–	–	–	–	WASHER, 7/8"	EA	1894
2051	–	–	–	–	NUT, 7/8"	EA	1704
2052	–	–	–	–	BOLT, 7/8" X 4"	EA	60
2053	–	–	–	–	NUT, 3/4"	EA	48
2054	–	–	–	–	WASHER, 3/4"	EA	48
2055	–	–	–	–	BOLT, 3/4" X 3 1/2"	EA	24
2056	–	–	–	–	PLATE, 1" X 1' 3 1/2" X 2' 7"	EA	6
2057	–	–	–	–	PLATE, 1" X 6 5/8" X 2' 7"	EA	6
2058	–	–	–	–	PLATE, 3/8" X 7" X 9"	EA	6
2059	–	–	–	–	THREADED ROD, 7/8"	EA	18
2060	–	–	–	–	BOLT 7/8" X 5 1/2"	EA	40
2061	–	–	–	–	BOLT, 7/8" X 4 1/2"	EA	108
2062	–	–	–	–	BOLT, 7/8" X 3 1/2"	EA	48
2063	–	–	–	–	THREADED ROD, 1"	EA	6
2068	–	–	–	–	PLATE, 1" X 6" x 2' 7"	EA	8
2069	–	–	–	–	PLATE, 3/4" X 9" 1' 7"	EA	4
2070	–	–	–	–	PLATE, 1" X 1' 2 1/2" X 2' 7"	EA	4
2071	–	–	–	–	BOLT 7/8" X 3"	EA	196

PLOT SCALE: AS SHOWN
3/7/2025 11:44:08 AM 43377–s–et–dt700.dwg

No.	Revisions	Date	By

AMTRAK

Office of Engineering
Engineering Design
National Railroad Passenger Corporation
30th Street Station, Philadelphia, Pennsylvania 19104

Approved	Date

COMMONWEALTH OF PENNSYLVANIA
REGISTERED PROFESSIONAL ENGINEER
MATTHEW JOHN SCHREFFLER
PE096328

HNTB

HNTB Corporation
1650 Arch Street, Suite 1700
Philadelphia, PA 19103
215–568–6500

KEYSTONE CORRIDOR
I–83 RECONSTRUCTION EARLY ACTION
ELECTRIC TRACTION

OCS MASTER ASSEMBLY BOM (2 OF 2)

Designed	PJC	Drawn	PJC	Checked	MJS	Date	06/13/2025

Job No.	43377
File Name	43377–s–et–dt1700
Sheet No.	76 OF 77
Dwg. No.	ET–702

STEEL ASSEMBLY MASTER BILL OF MATERIAL

AMTRAK MARK NUMBER	REFERENCE DRAWING	DESCRIPTION	UNIT	QUANTITY
B1-14-5	ET-604	CROSSBEAM LATERAL SUPPORT	EA	2
BCC-2	ET-603	BEAM COLUMN CONNECTION	EA	4
BKPL-1	ET-611	DETAIL BKPL-1	EA	12
BSC-1	ET-611	BEAM SLIDING CONNECTION	EA	18
CS-176	ET-602	COLUMN SPLICE	EA	6
FO-119	ET-614	FIBER OPTIC CROSSARM ASSEMBLY	EA	1
FO-176	ET-614	FIBER OPTIC CROSSARM ASSEMBLY	EA	2
HT-2	ET-608	TRANSMISSION CROSSARM	EA	7
KF-1	ET-603	K-FRAME CROSS BEAM KF-1	EA	3
P-1	ET-600	POLE K-FRAME	EA	4
P-2	ET-601	POLE	EA	2
PC-1A	ET-614	POLE CLAMP	EA	5
PC-1B	ET-614	POLE CLAMP	EA	1
PC-2D	ET-614	POLE CLAMP	EA	4
PC-5	ET-614	POLE CLAMP	EA	1
SB-1	ET-605	SAG BRACE SB-1	EA	2
SB-2	ET-605	SAG BRACE SB-2	EA	4
SP-2	ET-609	SIGNAL POWER CROSSARM	EA	2
SP-3	ET-609	SIGNAL POWER CROSSARM	EA	1
SP-5	ET-610	SIGNAL POWER CROSSARM	EA	1
SPLC-1	ET-603	BEAM SPLICE CONNECTION	EA	2

FOUNDATION ASSEMBLY MASTER BILL OF MATERIAL

AMTRAK MARK NUMBER	REFERENCE DRAWING	DESCRIPTION	UNIT	QUANTITY
F-1	ET-616	FOUNDATION F-1	EA	4
F-1A	ET-617	FOUNDATION F-1A	EA	2
GA-1	ET-618	GUY ANCHOR FOUNDATION	EA	4

PLOT SCALE: AS SHOWN
3/7/2025 1:44:08 AM
43377-s-et-dtl700.dwg

No.	Revisions	Date	By

AMTRAK

Office of Engineering
Engineering Design
National Railroad Passenger Corporation
30th Street Station, Philadelphia, Pennsylvania 19104

Approved	Date

COMMONWEALTH OF PENNSYLVANIA
REGISTERED PROFESSIONAL ENGINEER
MATTHEW JOHN SCHREFFLER
PE096326

HNTB
HNTB Corporation
1650 Arch Street, Suite 1700
Philadelphia, PA 19103
215-568-6500

KEYSTONE CORRIDOR
I-83 RECONSTRUCTION EARLY ACTION
ELECTRIC TRACTION

STEEL AND FOUNDATION BOM

Designed PJC | Drawn PJC | Checked MJS | Date 06/13/2025

Job No.	43377
File Name	43377-s-et-dtl700
Sheet No.	77 OF 77
Dwg. No.	ET-703