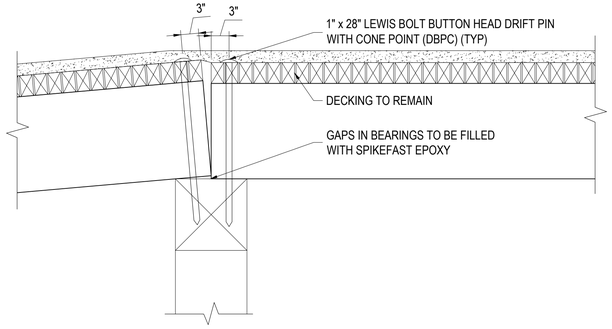

STRINGER FASTENING DETAIL

1" = 1'-0"

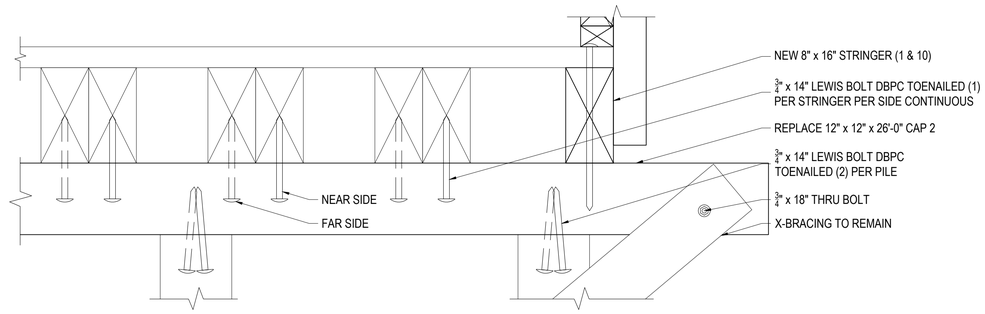

CAP DETAIL

1" = 1'-0"

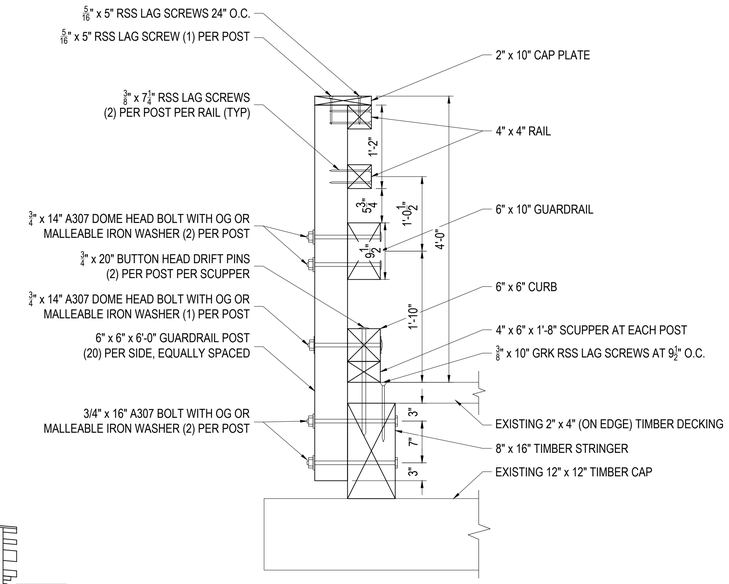

GUARDRAIL/POST ASSEMBLY DETAIL

1" = 1'-0"

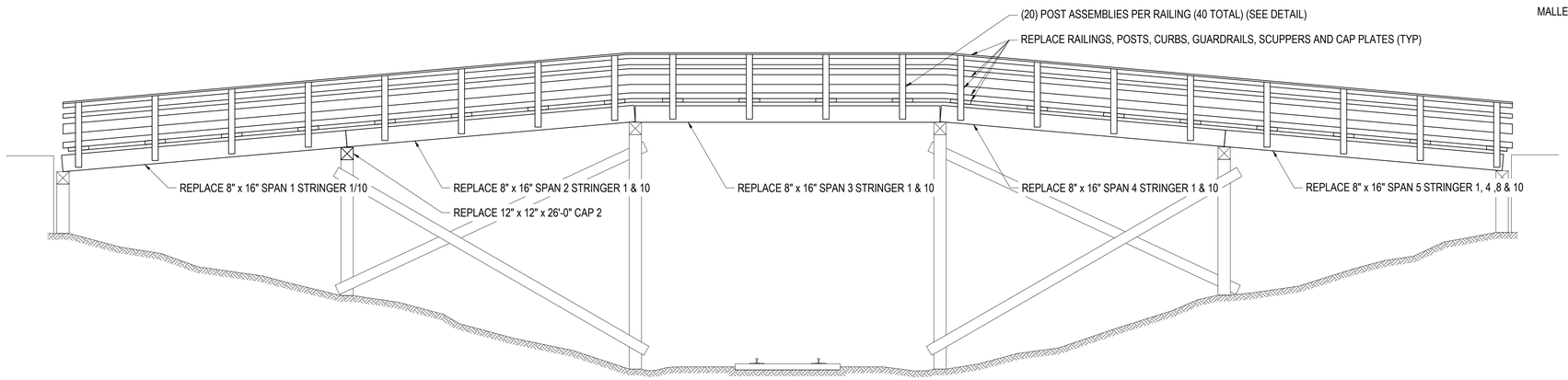

ELEVATION VIEW

3/16" = 1'-0"

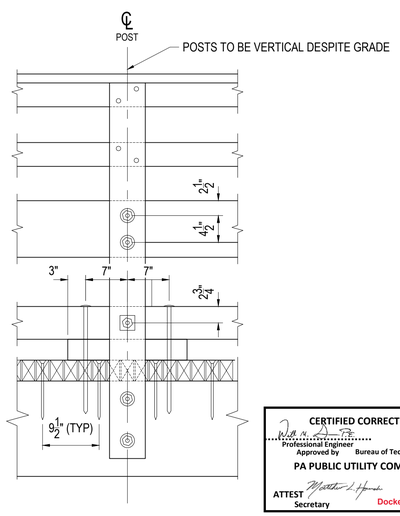

GUARDRAIL/POST ASSEMBLY BOLT LOCATIONS

1" = 1'-0"

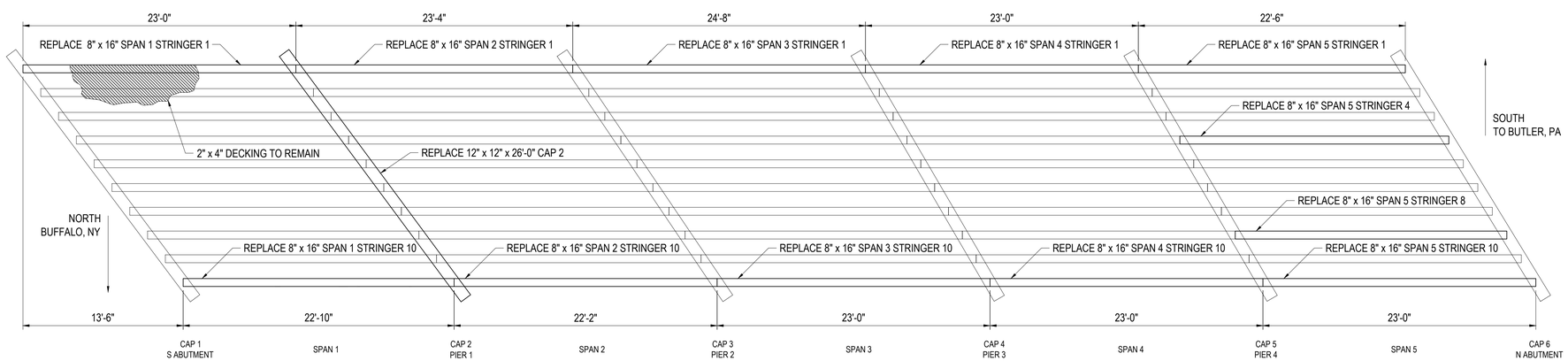

PLAN VIEW

3/16" = 1'-0"

NOTES:

1. THE CONTRACTOR SHALL SUBMIT A SHORING PLAN FOR REPLACING THE CAP TO BE APPROVED BY THE ENGINEER.

2. ALL WORK SHALL CONFORM TO SECTION 540 - TIMBER CONSTRUCTION OF G&W INC. STANDARD CONSTRUCTION SPECIFICATIONS.

CERTIFIED CORRECT PLANS
Professional Engineer
Approved by Bureau of Technical Utility Services
PA PUBLIC UTILITY COMMISSION
ATTEST Secretary
09/22/2025
Docket: A-2025-3056642

COMMONWEALTH OF PENNSYLVANIA
REGISTERED PROFESSIONAL ENGINEER
WAYNE WRIGHT DUFFETT
No. 056708E
8/19/25

BUFFALO & PITTSBURGH RAILROAD
PUNXSUTAWNEY, PENNSYLVANIA

SHAWMUT SUBDIVISION
BRIDGE 82.98 SOUTH BUFFALO
BRIDGE REPAIRS

TEC ASSOCIATES CONSULTING ENGINEERS
40 MECHANIC STREET SOUTH PORTLAND, MAINE 04106

SCALE	DATE	
NOTED	13 AUGUST 2025	

REVISION #	REVISION DATE	PAPER SIZE	JOB NUMBER	DRAWN BY	DESIGNED BY	DRAWING. NO.
1	13 AUG, 2025	24" x 36"	2513-24	GJL	GJL	1 of 1